DEPARTMENT OF THE ARMY
U.S. Army Corps of Engineers
441 G Street, NW
Washington, DC 20314-1000

EM 1110-2-2502

CECW-EC

Engineer Manual
No. 1110-2-2502

1 August 2022

Engineering and Design
FLOODWALLS AND OTHER HYDRAULIC RETAINING WALLS

1. Purpose. This manual provides guidance and information for the selection, design, inspection, evaluation, maintenance, repair, and rehabilitation of floodwalls and other hydraulic retaining walls.

2. Applicability. This manual applies to all Headquarters, U.S. Army Corps of Engineers (HQUSACE) commands having responsibilities for the planning, design, analysis, construction, and maintenance for civil works projects.

3. Distribution Statement. Approved for public release; distribution is unlimited.

FOR THE COMMANDER:

11 Appendixes

JAMES J. HANDURA
COL, EN
Chief of Staff

SUMMARY of CHANGE

EM 1110-2-2502 Floodwalls and Other Hydraulic Retaining Walls
United States Army Corps of Engineers (USACE)

Boards, Commissions, and Committees: USACE HQ Engineering and Construction Division

This administrative revision, dated 1 August 2022:

- Incorporates EM 1110-2-2504, Design of Sheet Pile Walls.
- Incorporates I-wall analysis and design guidance developed after Hurricane Katrina that had been provided in ETL 1110-2-575 and EC 1110-2-6066.
- Updates the description of wall types and wall systems covered under this manual.
- Adds information for risk-informed design and evaluation.
- Updates guidance on site investigation and soil parameter development.
- Updates guidance on computation and selection of loads and load combinations and structural strength design.
- For shallow-founded concrete walls: Incorporates EM 1110-2-2100 for design of stability performance modes; and updates guidance for analysis and design of bearing capacity, settlement, and deflection.
- Adds guidance for:
    - Evaluation of walls.
    - Strengthening and for rehabilitating existing walls.
    - Analysis of walls, including full numeric analysis.
    - Geotechnical seismic performance.
    - Use of PVC sheet piling.
    - Concrete walls with deep foundations.
    - Post-tensioned tieback sheet pile walls.
    - Design for global stability and for internal erosion performance modes.
    - Analyzing and designing the connection between the reinforced concrete and the sheet pile in I-walls.
    - Scour and erosion of walls.
    - Corrosion protection of steel wall elements.
    - Ground improvement for wall foundations.
    - Road and railroad crossings through walls.
    - Vegetation zones near the wall.

DEPARTMENT OF THE ARMY
U.S. Army Corps of Engineers
441 G Street, NW
CECW-EC Washington, DC 20314-1000

*EM 1110-2-2502

Engineer Manual
No. 1110-2-2502

1 August 2022

Engineering and Design
FLOODWALLS AND OTHER HYDRAULIC RETAINING WALLS

TABLE OF CONTENTS

	Paragraph	Page
Chapter 1: Introduction		
Purpose	1.1	1
Applicability	1.2	1
Distribution Statement.	1.3	1
References.	1.4	1
Records Management (Recordkeeping) Requirements.	1.5	1
Discussion.	1.6	1
General.	1.7	1
Mandatory Requirements.	1.8	2
Scope	1.9	2
Manual Organization.	1.10	3
General Requirements.	1.11	3
Mandatory Requirements.	1.12	3
Chapter 2: Wall Systems		
Introduction.	2.1	4
Concrete Walls with a Shallow Foundation.	2.2	4
Concrete Walls Supported by a Deep Foundation.	2.3	8
Cantilever Pile Walls.	2.4	10
Anchored Pile Walls.	2.5	15
Other Wall Systems.	2.6	18
Materials.	2.7	20

*This manual supersedes EM 1110-2-2502 dated 29 September 1989, EM 1110-2-2504 dated 31 March 1994, EC 1110-2-6066 dated 31 October 2010, ETL 1110-2-575 dated 1 September 2011 and ECB 2017-2 dated 27 January 2017.

Wall Systems Applied by Wall Type. 2.8 25
Mandatory Requirements. 2.9 26

Chapter 3: Risk Considerations and Potential Failure Modes

Introduction. 3.1 27
Incorporation of Risk in Design and Evaluation of Walls. 3.2 27
Potential Failure Modes. 3.3 28
General PFMs for Concrete Walls with a Shallow Foundation (SF) 3.4 32
General PFMs for Concrete Walls Supported by a Deep Foundation (DF). 3.5 41
General PFMs for Cantilever Pile Walls (CP). 3.6 49
General PFMs for Anchored Pile Walls. 3.7 56
General PFMs for Wall Transitions (WT). 3.8 63
Mandatory Requirements. 3.9 69

Chapter 4: General Design Requirements

Introduction. 4.1 70
Performance Modes and Limit States. 4.2 70
Design Basis. 4.3 70
Performance Requirements 4.4 72
Mandatory Requirements. 4.5 74

Chapter 5: Site Information

Introduction. 5.1 75
Site Information Category 5.2 75
Topography and Bathymetry 5.3 79
Geology. 5.4 80
Reach Selection and Analysis Cross Sections. 5.5 81
Geotechnical Investigation. 5.6 82
Exploration Techniques. 5.7 83
Designing an Investigation Program. 5.8 86
Geotechnical Parameters for Static Analysis. 5.9 91
Geotechnical Parameters for Earthquake Loading. 5.10 100
Selection of Design Soil Parameters. 5.11 102
Environmental. 5.12 104
Mandatory Requirements. 5.13 105

Chapter 6: System Loads

Introduction. 6.1 106
Typical Loads by Wall Type. 6.2 106
Load Categories and Load Selection. 6.3 107
Load Types. 6.4 110
Gravity Loads. 6.5 110
Hydrostatic and Groundwater. 6.6 111
Lateral Earth Pressures and Compaction. 6.7 123
Surcharge Loads. 6.8 140
Earthquake. 6.9 146
Hydrodynamic. 6.10 148
Wave. 6.11 149
Impact from Debris or Floating Ice. 6.12 149
Forces from Thermal Expansion of Ice. 6.13 150
Vessel and Barge Impact. 6.14 150
Wind. 6.15 152
Hawser. 6.16 152
Vertical Live Loads. 6.17 152
Load Combinations. 6.18 153
Mandatory Requirements. 6.19 154

Chapter 7: Analysis and Design – Concrete Walls with a Shallow Foundation

Introduction. 7.1 155
Performance Modes. 7.2 155
Sliding Stability. 7.3 155
Resultant Location. 7.4 158
Bearing Capacity. 7.5 162
Global Stability. 7.6 164
Internal Erosion. 7.7 166
Settlement and Deflection. 7.8 168
Strength of Structural Elements. 7.9 170
General Practices. 7.10 171
Mandatory Requirements. 7.11 174

Chapter 8: Analysis and Design – Concrete Walls Supported by a Deep Foundation

Introduction. 8.1 176
Performance Modes. 8.2 176
Bearing and Stability. 8.3 177

Global Stability..... 8.4..... 180
Internal Erosion..... 8.5..... 181
Settlement and Downdrag..... 8.6..... 181
Strength of Structural Elements..... 8.7..... 184
General Practices..... 8.8..... 187
Mandatory Requirements..... 8.9..... 189

Chapter 9: Analysis and Design – Cantilever Pile Walls

Introduction..... 9.1..... 190
Performance Modes..... 9.2..... 192
Rotational Stability..... 9.3..... 192
Global Stability..... 9.4..... 202
Internal Erosion..... 9.5..... 206
Settlement and Deflection..... 9.6..... 207
Strength of Structural Elements..... 9.7..... 210
I-Wall Sheet Pile to Concrete Connection..... 9.8..... 213
Mandatory Requirements..... 9.9..... 226

Chapter 10: Analysis and Design – Passive Single Anchor Pile Walls

Introduction..... 10.1..... 228
Performance Modes..... 10.2..... 228
Rotational Stability..... 10.3..... 229
Global Stability..... 10.4..... 231
Anchor Stability..... 10.5..... 231
Internal Erosion..... 10.6..... 238
Settlement and Deflection..... 10.7..... 238
Strength of Structural Elements..... 10.8..... 240
Mandatory Requirements..... 10.9..... 246

Chapter 11: Analysis and Design – Post-Tensioned Tieback Walls

Introduction..... 11.1..... 248
Performance Modes..... 11.2..... 250
Apparent Earth Pressure Diagrams for Tieback Wall Design: Flexible Walls..... 11.3..... 251
Rotational Stability..... 11.4..... 263
Global Stability..... 11.5..... 265
Anchor Stability..... 11.6..... 266
Axial Capacity of Wall Element..... 11.7..... 273

Internal Erosion. 11.8 273
Settlement and Deflection. 11.9 273
Strength of Structural Elements. 11.10 274
Corrosion Protection of Anchor Components. 11.11 275
Short-Term Monitoring of Post-Tensioned Tieback Walls. . 11.12 279
Mandatory Requirements. 11.13 280

Chapter 12: Miscellaneous Engineering Design Topics

Introduction. 12.1 281
Transition Sections Between Walls and Embankments. 12.2 281
Scour and Erosion Protection. 12.3 287
Concrete Walls – Special Types of Monoliths. 12.4 292
Joints and Waterstops for Concrete Walls. 12.5 293
Corrosion Protection for Steel Piles. 12.6 306
Backfill. 12.7 307
Drainage and Seepage Control. 12.8 308
Ground Improvement. 12.9 325
Utilities, Conduits, and Pipe Crossings. 12.10 328
Railroad and Roadway Crossings. 12.11 334
Design for Safety. 12.12 334
Architectural Treatment and Landscaping. 12.13 336
Vegetation. 12.14 336
Instrumentation. 12.15 337
Mandatory Requirements. 12.16 337

Chapter 13: Engineering Considerations During Construction

Introduction. 13.1 338
Foundation Preparation. 13.2 338
Construction Sequence and Temporary Protection. 13.3 339
Obstructions. 13.4 340
Earthwork. 13.5 341
Sheet Pile Installation. 13.6 343
Construction Vibrations. 13.7 345
Anchors. 13.8 347
Wall Elevation Verification Surveys. 13.9 348
Mandatory Requirements. 13.10 348

Chapter 14: Evaluation of Existing Walls

Introduction. 14.1 349
Acceptance Requirements. 14.2 349
Risk Assessment. 14.3 350
Information Requirements. 14.4 350
Performing the Evaluation. 14.5 352
Evaluation Considerations. 14.6 352
Interim Risk Reduction Measures. 14.7 359
Long-Term and Comprehensive Risk Management Measures. 14.8 359
Structural Risk Reduction Measures. 14.9 360
Strengthening Existing Wall Systems. 14.10 360
Mandatory Requirements. 14.11 365

Chapter 15: Operation, Maintenance, Repair, Rehabilitation, and Replacement

Introduction. 15.1 366
Risk Considerations. 15.2 366
Inspection. 15.3 367
Operation. 15.4 372
Maintenance. 15.5 374
Repair and Rehabilitation. 15.6 374
Replacement. 15.7 382
Mandatory Requirements. 15.8 383

Chapter 16: Analysis Methods

Introduction. 16.1 384
Elastic Stress Distributions Within a Soil Continuum. 16.2 385
Limit Equilibrium. 16.3 386
Limit Analysis. 16.4 387
Partial Numeric Analysis: Beam – Spring Models. 16.5 387
USACE PC Software. 16.6 388
Full Numeric Analysis: Finite Element Method and Finite Difference Method with a Soil Continuum. 16.7 394
Methods and Analysis Types. 16.8 395
Material Behavior. 16.9 400
Verification and Validation. 16.10 414
Mandatory Requirements. 16.11 419

Chapter 17: Geotechnical Seismic Performance of Floodwalls and Hydraulic Retaining Structures

Introduction. 17.1 420
Evaluation and Design Ground Motions. 17.2 421
Liquefaction Potential Evaluation. 17.3 423
Cyclic Softening of Fine-Grained Soils. 17.4 424
Strength of Potentially Non-Liquefiable Soils. 17.5 424
Post-Liquefaction Residual Strengths. 17.6 424
Pseudostatic Stability Analysis with Reduced Shear Strength and Post-Liquefaction Residual Strengths. 17.7 426
Cyclically Induced Reconsolidation or Volumetric Settlement. 17.8 427
Accumulation of Structural Displacements During Cyclic Loading. 17.9 430
Slope Stability, Flow Slides, and Lateral Spreading. 17.10 432
Additional Considerations for Walls Supported by Deep Foundations. 17.11 434
Additional Considerations for Anchored Walls and Post-Tensioned Tieback Walls. 17.12 435
Full Numeric Analysis of Seismic Performance. 17.13 436
Mandatory Requirements. 17.14 436

Appendixes

A. References and Units Conversion 437
B. Polyvinyl Chloride (PVC) Sheet Pile 465
C. Example Load Combinations 472
D. Design Example – Shallow-Founded T-Type Earth Retaining Wall 488
E. Design Example – Pile-Founded T-Type Coastal Floodwall 538
F. Design Example – Cantilever I-Wall with Riverine Flood Load 577
G. Design Example – Passive Single Anchor Pile Earth Retaining Wall 609
H. Design Example – Post-Tensioned Tieback Earth Retaining Wall 636
I. Procedure for Design of Pile-Founded Concrete Floodwalls to Resist Unbalanced Loads 671
J. Earth Pressure Coefficient Commentary 687
K. Full Numeric Analysis Commentary and Case Histories 704

Table List

Table 3.1: Failure Mode Progression for PFM SF-1 32
Table 3.2: Failure Mode Progression for PFM SF-2 33

Table 3.3: Failure Mode Progression for PFM SF-3 34
Table 3.4: Failure Mode Progression for PFM SF-4 35
Table 3.5: Failure Mode Progression for PFM SF-5 36
Table 3.6: Failure Mode Progression for PFM SF-6 37
Table 3.7: Failure Mode Progression for PFM DF-1a 41
Table 3.8: Failure Mode Progression for PFM DF-1b 43
Table 3.9: Failure Mode Progression for PFM DF-2 44
Table 3.10: Failure Mode Progression for PFM DF-3 46
Table 3.11: Failure Mode Progression for PFM DF-4b 47
Table 3.12: Failure Mode Progression for PFM DF-4c 47
Table 3.13: Failure Mode Progression for PFM CP-1 49
Table 3.14: Failure Mode Progression for PFM CP-2 51
Table 3.15: Failure Mode Progression for PFM CP-3 52
Table 3.16: Failure Mode Progression for PFM CP-4 54
Table 3.17: Failure Mode Progression for PFM AP-1a 57
Table 3.18: Failure Mode Progression for PFM AP-1b 58
Table 3.19: Failure Mode Progression for PFM AP-2 58
Table 3.20: Failure Mode Progression for PFM AP-3 59
Table 3.21: Failure Mode Progression for PFM AP-4 60
Table 3.22: Failure Mode Progression for PFM AP-5a 60
Table 3.23: Failure Mode Progression for PFM AP-5b 61
Table 3.24: Failure Mode Progression for PFM AP-5c 62
Table 3.25: Failure Mode Progression for PFM WT-1 64
Table 3.26: Failure Mode Progression for PFM WT-2 65
Table 3.27: Failure Mode Progression for PFM WT-3 67
Table 3.28: Failure Mode Progression for PFM WT-4 68
Table 5.1: Minimum Exploration Requirements for Wall Systems in This EM for Design and Assessment 87
Table 5.2: Typical Undrained Strength Characteristics of Clays (After Sowers & Sowers 1951)a 94
Table 5.3: Description of Rock Based on UCS (After Sabatini et al., 2002) 97
Table 5.4: Typical Relative Density and Strength Characteristics of Silica Sands (c' = 0) 98
Table 5.5: Seismic Site Classification (Table 20.3-1 of ASCE 7-16) 101
Table 6.1: Load Types 110
Table 6.2: Recommended Design Values for Interface Friction Angle or Interface Friction Angle Ratio 128
Table 6.3: Logspiral Passive Earth Pressure Coefficient KP for Level Ground Consistent with NAVFAC DM7.2 (1982) with Various Values of Developed Friction Angle and δ'/ϕ' 135
Table 7.1: Bearing Capacity Minimum Factors of Safety 164
Table 7.2: Minimum Factors of Safety for Global Stability 165
Table 7.3: Minimum Factors of Safety for Vertical Gradient, FS_{vg} 168

Table 8.1: Recommended Deflection Limits for Free Standing Walls (Measured at the Pile Head) 179
Table 8.2: Minimum Factors of Safety for Global Stability 181
Table 9.1: Minimum Passive Pressure Factors of Safety for Rotational Stability 195
Table 9.2: Minimum Factors of Safety for Global Stability 202
Table 9.3: Maximum Deflections at Ground Surface for Rotation of Floodwalls, Dam Walls, and Dam Crest Walls 208
Table 9.4: Maximum Wall Heights for Deformation Control of Cantilever Pile Walls Used for Floodwalls, Dam Walls, and Dam Crest Walls 209
Table 9.5: Minimum Load Factors for Design of Steel Piling 211
Table 9.6: Minimum Stresses for Precast Concrete Piling 212
Table 10.1: Minimum Factors of Safety for Determining the Depth of Penetration Applied to the Passive Pressures (Anchored Sheet Piling, Anchor Walls, and Deadman Anchors) 230
Table 10.2: Minimum Factors of Safety for Global Stability 231
Table 10.3: Minimum Load Factors for Design Steel Wales 246
Table 11.1: Minimum Factors of Safety Applied to Net Passive Resistance for Determining the Depth of Penetration 264
Table 11.2: Minimum Factors of Safety for Global Stability 265
Table 11.3: Presumptive Ultimate Values of Load Transfer for Preliminary Design of Small-Diameter Straight-Shaft Gravity-Grouted Ground Anchors in Soil (After Sabatini et al., 1999) 267
Table 11.4: Presumptive Average Ultimate Bond Stress for Ground/Grout Along the Anchor Bond Zone (After Sabatini et al., 1999) 268
Table 11.5: Presumptive Ultimate Values of Load Transfer for Preliminary Design of Ground Anchors in Rock (After Sabatini et al., 1999) 269
Table 11.6: Minimum Factors of Safety for Determining Allowable Bond Stress for Grouted Anchors 270
Table 11.7: Allowable Stresses for Anchorage Tendons 275
Table 12.1: Minimum Thickness of Expansion Joint Filler 295
Table 12.2: Likelihood of Various Utility Scenarios 330
Table 14.1: Example: Tensile Strength of Concrete for f'c of 6,000 psi (41.4 MPa) 358
Table 16.1: CASE PC Software Related to Floodwalls and Other Hydraulic Retaining Walls 389

Figure List

Figure 2.1: CIP Cantilever T-Type Reinforced Concrete Wall 5
Figure 2.2: Forces on a Cantilever T-Type Reinforced Concrete Wall 6
Figure 2.3: Mass Concrete Gravity Wall 7
Figure 2.4: Concrete Walls Supported by a Deep Foundation 8
Figure 2.5: T-Wall Supported by Deep Foundation 9
Figure 2.6: Earth Pressures on a Cantilever Pile Wall 10
Figure 2.7: Sheet Pile Wall 11

Figure 2.8: Sheet Pile Wall with Concrete Cap 12
Figure 2.9: Combined Wall Plan View 13
Figure 2.10: Discrete Cantilever Pile Wall 14
Figure 2.11: Passive Single-Anchor Pile Walls 16
Figure 2.12: Example: Post-Tensioned Tieback Wall 17
Figure 2.13: Braced Sheet Pile Wall 19
Figure 2.14: Demountable Floodwall (St. Paul District) 20
Figure 2.15: Typical Precast Concrete Sheet Piling Sections 22
Figure 2.16: Z-Type Steel Sheet Piling 23
Figure 2.17: Typical Steel Sheet Piling Interlocks 24
Figure 3.1: Example: Failure Mode Event Tree (Sliding) 30
Figure 3.2: Example: Wall Failure Scour and Erosion leading to the Failure of the I-Wall on the IHNC in New Orleans, LA during Hurricane Katrina (2005) 31
Figure 3.3: Sliding Failure Mode for a Concrete Walls with a SF 33
Figure 3.4: Resultant Location Failure Mode for a Concrete Wall with a SF 34
Figure 3.5: Bearing Capacity Failure Mode for a Concrete Walls with a SF 35
Figure 3.6: Global Slope Failure Mode for Concrete Walls with a SF 36
Figure 3.7: Internal Erosion Failure Mode for a Concrete Wall with a SF 37
Figure 3.8: Strength Failure of Wall Stem 38
Figure 3.9: Progression of Lateral Movement Due to Sliding Instability 40
Figure 3.10: Progression of Dynamic Settlement 41
Figure 3.11: Axial Failure of a Deep Foundation Element 42
Figure 3.12: Lateral Failure of a Deep Foundation Element 43
Figure 3.13: Global Stability Failure of a Wall with a Deep Foundation 45
Figure 3.14: Rotational Failure Mode for a Cantilever Pile Wall 50
Figure 3.15: Global Stability Failure Mode for a Cantilever Pile Wall 51
Figure 3.16: Internal Erosion Failure Mode for a Cantilever Pile Wall 53
Figure 3.17: Overtopping Scour and Erosion of a Cantilever Pile Wall 55
Figure 3.18: Rotational Failure Mode for a Single Anchor Wall 57
Figure 3.19: Global Stability Failure Mode 59
Figure 3.20: Structural Strength Failure Mode for a Single Anchor Wall 61
Figure 3.21: Wave Attack Erosion at Floodwall Tie-In 64
Figure 3.22: Photo of an Overtopping Failure at a Levee to Floodwall Transition in New Orleans After Hurricane Katrina 65
Figure 3.23: Photo of an Overtopping Failure at a Transition from a Levee to a Control Structure Wing Wall Near New Orleans After Hurricane Katrina 66
Figure 3.24: Retaining Walls Perpendicular to an Embankment 69
Figure 5.1: Evaluation of Undrained Strength from UU Triaxial Test 94
Figure 6.1: Load Category Versus Return Period 108
Figure 6.2: Hydrostatic Pressure with Crack in Undrained Cohesive Soils 113
Figure 6.3: Water Pressures from Flow Net 114

Figure 6.4: Water Pressures from Line-of-Creep applied to an Isotropic, Homogeneous Soil Regime 116
Figure 6.5: Uplift Pressures for a Wall with a Sheet Pile Cutoff That Penetrates to an Impervious Soil Layer 119
Figure 6.6: Bracketed Assumptions for Uplift Pressures for a Wall with a Deep Foundation 121
Figure 6.7: Definition of Active and Passive Earth Pressures 125
Figure 6.8: Variations of Earth Pressure Force with Wall Movement Calculated by Finite Element Analyses 126
Figure 6.9: Illustration of Variables Within Earth Pressure Coefficient Equations and Restrictions on Use of Coulomb and Wedge Methods 133
Figure 6.10: Seepage Force Effects 139
Figure 6.11: Seepage Paths for Gradient Determination Along the Side and Base Interfaces for the Structural Wedge 139
Figure 6.12: Strip Load (Section View, Angles in Radians) 141
Figure 6.13: Line Load (Section View) 142
Figure 6.14: Ramp Load (Section View) 143
Figure 6.15: Triangular Load (Section View) 144
Figure 6.16: Point Load 145
Figure 7.1: Multiple Wedge Sliding Analysis 156
Figure 7.2: Forces for Analysis of the Location of the Resultant with Flat Base 159
Figure 7.3: Forces for Analysis of the Location of the Resultant with Sloped Base 160
Figure 7.4: Forces for Analysis of the Location of the Resultant with Key 161
Figure 7.5: Example: Slip Surface Relevant to Global Stability Analysis 164
Figure 7.6: Soil Founded Floodwall 171
Figure 7.7: Wall Stem Thickness Transitions 172
Figure 7.8: Wall Stem Reinforcement Transitions 174
Figure 8.1: Illustration of Potential Slip Surfaces for Global Stability Analysis of Pile Supported T-Wall 180
Figure 8.2: Forces on Batter Piles from Soil Settlement 183
Figure 8.3: Critical Sections for Shear in Pile-Founded Cantilever T-Type Walls 185
Figure 8.4: Hooked A706 Reinforcement Anchors on Steel HP-Shape Pile 186
Figure 8.5: General Reinforcement Anchor Orientations for Steel Pipe & Precast Prestressed Concrete Pile 187
Figure 8.6: Wall Origin Location Using CPGA Axis 188
Figure 9.1: Illustration of Gap for Floodwalls in Undrained Cohesive Soil 191
Figure 9.2: Rotational Failure Due to Inadequate Penetration for a Cantilever Pile Wall 193
Figure 9.3: Wall Zones 193
Figure 9.4: Design Pressure Distribution for Cantilever Earth Retaining Wall Without Water in Coarse-Grained Soil 196
Figure 9.5: Assumed Pressure Distribution for a Cantilever Floodwall in Free Draining Material 197

Figure 9.6: Assumed Pressure Distribution for Clay Founded Floodwall with Theoretical Gap Depth Below Transition Point 198
Figure 9.7: Assumed Pressure Distribution for Clay Founded Floodwall with Theoretical Gap Depth Above the Transition Point 199
Figure 9.8: Relationship Between Rotational Factors of Safety and Net Deflection (USACE) 201
Figure 9.9: Relationship Between Embedment Ratio and Deflection (USACE) 201
Figure 9.10: Global Stability Failures for Cantilever Wall (a) Without Gap; (b) With Water-Filled Gap 203
Figure 9.11: Potential Crack Propagation Below Waterside Gap Assumed for Global Stability and Seepage Analyses 206
Figure 9.12: Definition of Wall Height for Table 9.4 210
Figure 9.13: Resisting and Driving Side Legs 213
Figure 9.14: Internal Forces at the Connection 214
Figure 9.15: Finite Element Results, Unrestrained Connection: Section Stresses at the Top of the Sheet Pile 215
Figure 9.16: Finite Element Results, Unrestrained Connection: Moment at Top of Connection Verses Hydrostatic Head 216
Figure 9.17: Simplified Free Body Diagram Sheet Pile Reaction Forces on Concrete at Connection 217
Figure 9.18: Restrained Connection with Fully Bonded Tie Bars 218
Figure 9.19: Restrained Connection with Post Installed Tie Bars in Drilled or Formed Unbonded Holes 218
Figure 9.20: Simplified Free Body Diagram Sheet Pile Reaction Forces on Concrete at Tied Connection 219
Figure 9.21: Finite Element Results, Restrained Bonded Tie Bar Connection: Moment at Top of Connection Verses Hydrostatic Head 220
Figure 9.22: Finite Element Results, Restrained Unbonded Tie Bars: Moment at Top of Connection Verses Hydrostatic Head 221
Figure 9.23: Concrete Cap Geometry Requirements 222
Figure 9.24: Driving Leg: General Cross Section 223
Figure 10.1: Design Pressure Distribution for Free Earth Design of Anchored Walls 230
Figure 10.2: Anchor Configurations 232
Figure 10.3: Minimum Anchor – Wall Spacing for Full Passive Anchor Resistance in Homogeneous Soil 233
Figure 10.4: Resistance of Continuous Anchor Wall 235
Figure 10.5: Resistance of Discontinuous Anchor (Deadman) 237
Figure 10.6: Pile Anchors 238
Figure 10.7: Rowe's Moment-Reduction Coefficients 242
Figure 10.8: Anchor Force Components for Inclined Anchors 243
Figure 10.9: Typical Wale Configurations 244
Figure 11.1: Effect of Wall Stiffness and Soil Strength on Lateral Wall Deflection 249

Figure 11.2: Recommended Apparent Earth Pressure Diagrams for Coarse-Grained Soils: Flexible Walls 253
Figure 11.3: Recommended Apparent Earth Pressure Diagram for Stiff to Hard Clays: Flexible Walls 255
Figure 11.4: Anchor Loads and Wall Bending Moments Calculated Using Tributary Area Method: Flexible Walls 257
Figure 11.5: Modeling the Ground Anchor Force in Limit Equilibrium Analysis 259
Figure 11.6: Effective Unit Weight for Partially Submerged Soils 261
Figure 11.7: Apparent Earth Pressure Diagram Computed Using Effective Stress Soil Strength Parameters with Hydrostatic Water Table 262
Figure 11.8: Active and Passive Pressures for Determining Wall Embedment: Flexible Walls 264
Figure 11.9: Mobilization of Bond Stress for a Tension Anchor 271
Figure 11.10: Vertical and Horizontal Spacing Requirements for Ground Anchors 271
Figure 11.11: Settlement Profile Behind Braced and Anchored Walls 274
Figure 11.12: Corrosion Protection for Strand Anchor 276
Figure 11.13: Corrosion Protection for Bar Anchor 277
Figure 11.14: Corrosion Protection for Anchorage 278
Figure 12.1: Floodwall to Levee Transitions 283
Figure 12.2: Typical Details of Joint Between Sheet Pile Extension, I-Wall, and T-Wall 284
Figure 12.3: T-Wall to I-Wall/Levee Transition Under Construction (New Orleans District) 285
Figure 12.4: Diagram of Overtopping Erosion at Levee – Floodwall Transition 286
Figure 12.5: Transition with Earth Retaining Walls Perpendicular to an Earth Embankment (Louisville District) 287
Figure 12.6: Differential Settlement Between T-Type Wall Monoliths 294
Figure 12.7: Typical Monolith, Generalized Joint Layout 297
Figure 12.8: Special Case of Straight Wall with Uniform Loading and Consistent Foundation Strength 297
Figure 12.9: Example: Shrinkage and Temperature Requirements for Various Joint Layouts 298
Figure 12.10: Typical Joint and Waterstop Details 299
Figure 12.11: Typical Joint and Waterstop Details (continued) 300
Figure 12.12: Transitions at Change in Wall Height 301
Figure 12.13: Transitions at Change in Wall Height (continued) 302
Figure 12.14: Waterstop Details 303
Figure 12.15: Waterstop Attachment to Sheet Pile 305
Figure 12.16: Waterstop Attachment to Sheet Pile (continued) 306
Figure 12.17: Inclined Drainage Blanket for Retaining Wall 310
Figure 12.18: Effect of Drain Location on Excess Hydrostatic Pressures on the Failure Plane 311
Figure 12.19: Drainage Blanket Located Adjacent to Retaining Wall 312

Figure 12.20: Prefabricated Drainage Composite Used as Drain Adjacent to Retaining Wall 313
Figure 12.21: Drainage System to Prevent Frost Penetration Behind Retaining Wall 314
Figure 12.22: Inspection Hole for Longitudinal Drain 316
Figure 12.23: Vertical Check Valve at End of Longitudinal Drain 317
Figure 12.24: Toe Drain for T-Type Floodwall with Horizontal Base 321
Figure 12.25: Approximation for Estimating Reduction in Permeability of Narrow Size-Ranged Aggregate Caused by Turbulent Flow 324
Figure 12.26: Removal Limits of Unsuitable Foundation Material 327
Figure 12.27: Delineation of Crossing Location 329
Figure 12.28: Load Frame and Hydraulic Jack to Press-In the Sheet Pile Under the Utility 331
Figure 12.29: Blockout Detail 333
Figure 12.30: Fence on Floodwall to Inhibit Access to Wall Top 335
Figure 12.31: Pointed Cap on Floodwall to Inhibit Access to Wall Top 336
Figure 14.1: I-Wall Types from EM 1110-2-2501 355
Figure 14.2: Addition of Multiple Strengthening Elements 363
Figure 14.3: Addition of FRP to Stem to Increase Flexural Strength 364
Figure 15.1: Emergency Measures to Control Piping 376
Figure 15.2: Permanent Waterstop Repair Measures 377
Figure 15.3: Permanent Water Stop Repair Measures 378
Figure 15.4: Permanent Waterstop Repair Measures 379
Figure 15.5: Permanent Waterstop Repair Measures 380
Figure 15.6: Waterstop Repair Using External Waterstop 381
Figure 15.7: Waterstop Repair Using External Waterstop 382
Figure 16.1: Comparison of Oedometer Test Results for Two Clays Using (a) Terzaghi CC and CR Parameters and (b) Model of Constrained Modulus Increasing with Effective Stress in Normally Consolidated Range 405
Figure 16.2: Influence of Strain Level on Soil Stiffness (a) Laboratory Tests and Design Applications and (b) In Situ Tests and Design Applications 407
Figure 16.3: Influence of (a) Mobilized Stress Ratio and (b) OCR on Rigidity Index 408
Figure 16.4: (a) Development of a Zone of Separation Between the I-Wall and the Soil Interface on the Waterside of the I-Wall Following Hurricane Katrina (b) Incorporating a Tension Crack in Full Numeric Analysis of I-Walls 412
Figure 17.1: Relationship Between Residual Excess Pore Pressure Ratio and FSliq for Sand and Gravel 426
Figure 17.2: Post-Liquefaction Volumetric Strains Versus Factor of Safety Against Liquefaction 429

Chapter 1
Introduction

1.1. Purpose. This manual provides guidance and information for the selection, design, inspection, evaluation, maintenance, repair, and rehabilitation of floodwalls and other hydraulic retaining walls.

1.2. Applicability. This manual applies to all Headquarters, U.S. Army Corps of Engineers (HQUSACE)-commands having responsibilities for the planning, design, analysis, construction, and maintenance for civil works projects.

1.3. Distribution Statement. Approved for public release; distribution is unlimited.

1.4. References. Appendix A lists required and related publications.

1.5. Records Management (Recordkeeping) Requirements. The records management requirement for all record numbers, associated forms, and reports required by this regulation is addressed in the Army's Records Retention Schedule – Army (RRS-A). Detailed information for all related record numbers is located in Army Records Information Management System (ARIMS)/RRS-A at https://www.arims.army.mil. If any record numbers, forms, and reports are not current, addressed, and/or published correctly in ARIMS/RRS-A, see Department of the Army Pamphlet 25-403, Guide to Recordkeeping in the Army.

1.6. Discussion.

1.6.1. This manual is intended primarily for floodwalls and other hydraulic retaining walls which will be subjected to hydraulic conditions such as flowing water, submergence, wave action, and spray, or are components of flood risk reduction systems for which failure would result in possible loss of life or high economic losses. References are provided for the design of retaining walls which do not fall under this definition. This manual incorporates risk-informed decision making for design and evaluation.

1.6.2. The user of this Engineer Manual (EM) is responsible for seeking opportunities to incorporate the Environmental Operating Principles (EOPs) wherever possible. A listing of the EOPs is available at:
http://www.usace.army.mil/Missions/Environmental/EnvironmentalOperatingPrinciples.aspx.

1.7. General.

1.7.1. Walls covered in this manual are used for hydraulic applications subjected to conditions such as flowing water, submergence, wave action, and spray, retain water, and/or are features of a dam or levee. Retaining walls that are part of civil works projects but not covered in this paragraph 1.9 may be designed according to this manual or with applicable industry standards.

1.7.2. Due to the U.S. Army Corps of Engineers' (USACE) unique structures and associated risks, criteria in this manual may be beyond what industry requires. Criteria presented in this manual is the minimum required. Engineers may design walls that exceed the minimum requirements to ensure resiliency as risk, economics, and schedule permit or dictate.

1.8. Mandatory Requirements. Engineers performing the selection, design, installation, construction, inspection, evaluation, maintenance, repair, and rehabilitation of floodwalls and other hydraulic retaining walls must satisfy specific mandatory requirements. The purpose of mandatory requirements usually pertains to critical elements of the safety analysis such as loads, load combinations, and factors of safety. Mandatory requirements are summarized at the end of each chapter.

1.9. Scope.

1.9.1. Types of Walls.

1.9.1.1. Walls covered under this manual include: floodwalls, floodwall closures, and demountable floodwalls; submerged retaining walls used for flood barriers, conveying or storing water, generating hydropower, water borne transportation, and for restoring the ecosystem; and retaining walls used in levees and dams.

1.9.1.2. Walls covered in this manual may have different basic purposes. Retaining walls are defined as walls that restrain material to maintain a difference in elevation. Earth retaining walls primarily retain soil although water may be present. There are several types of retaining walls that primarily retain water: among them are floodwalls, which reduce the risk of flooding to adjacent land or structures; dam walls, which form part of a permanent damming surface typically by tying one dam feature into another; dam crest walls, which are located on the crest of an earth dam to reduce wave overtopping; and seawalls, which primarily intercept waves in coastal areas.

1.9.2. Wall Systems. This manual applies to: walls with shallow foundations (bearing directly on rock or soil); walls with deep foundations (piles, caissons, etc.); cantilever pile walls; and pile walls anchored with a single row of passive anchors or with one or more rows of post tensioned anchors. Other types of wall systems, not covered in this EM, can be used in consultation with and approval by Corps of Engineers Civil Works – Engineering and Construction (CECW-EC).

1.9.3. Project Team Concept.

1.9.3.1. The design and evaluation of walls is a soil-structure interaction process involving geotechnical and structural engineers. Besides retaining earth or water, the walls should also fit into the project as a whole by: satisfying hydraulic requirements for height, location, etc.; working with geometric site constraints; satisfying aesthetic and environmental requirements; and satisfying other needs of the owner.

1.9.3.2. It is essential for proper design that there is complete coordination between the geotechnical and structural engineers. Coordination will also be performed with the project manager; geologist; hydraulic, civil, materials, and construction engineers; landscape architects; environmental scientists; real estate specialists; sponsors; owners; operators; and others as required.

1.9.4. Risk-Informed Decision Making. This manual incorporates risk-informed decision making for all aspects of the wall life cycle. Chapter 3 describes risk considerations for design and evaluation of walls. It also provides general probable failure modes that can be used for risk-informed decisions. Chapter 13 provides risk considerations for construction. Chapter 14 describes considerations for risk assessment in the evaluation of existing walls. Chapter 15 provides risk considerations for operation and maintenance of completed walls.

1.10. Manual Organization. Chapters 2 through 6 provide guidance on information needed to perform a design or evaluation, starting with a detailed description of the wall systems covered in Chapter 2. Chapters 7 through 11 provide specific information for performing design and analysis of the failure modes described in Chapter 3 for five wall system types. Chapter 12 provides information on miscellaneous topics related to design. Chapters 13 through 15 cover construction, evaluation, operation and maintenance, and rehabilitation performed after the design of a new project. Chapter 16 covers analysis methods and software. Chapter 17 covers seismic performance, liquefaction, and cyclic softening.

1.11. General Requirements. Design of civil works projects is performed to ensure acceptable performance over the life of the project. Three levels of performance for strength and serviceability are used to satisfy the structural and operational requirements for load categories with three expected ranges of recurrence (usual, unusual, and extreme). Basic design and performance requirements are provided in Chapter 4.

1.12. Mandatory Requirements. There are no mandatory requirements for this chapter.

Chapter 2
Wall Systems

2.1. Introduction.

2.1.1. Scope. This chapter describes wall systems that are commonly used for floodwalls and other hydraulic retaining walls. Various wall systems are currently available for use. Most of the types of wall systems can be designed to satisfy a project's specific needs. However, each of the wall systems have distinct characteristics that make them more favorable for certain applications. Materials that are used to construct the wall systems are described. Failure modes for the wall systems are described in Chapter 3.

2.1.2. Wall Systems. Wall systems are organized by major types: concrete walls with shallow foundations, concrete walls with deep foundations, cantilever pile walls, anchored walls with a single row of passive anchors, anchored walls with one or more rows of post-tensioned anchors, and other wall systems. These wall systems are described further in this chapter.

2.1.3. Selection. A wall system should be selected to meet the performance requirements provided in Chapter 4, while generally also providing the lowest life cycle cost. This manual provides advantages and disadvantages of the covered wall systems, relative to each other, to help with selection. In addition, information is provided on the wall systems commonly used based on the purpose and usage of the wall (wall type).

2.2. Concrete Walls with a Shallow Foundation.

2.2.1. General. For concrete walls with shallow foundations, soil or rock directly support the base. This wall system derives stability through a combination of dead load and soil resistance. Shallow-founded concrete walls are appropriate when sliding, bearing capacity, and resultant location meet the stability requirements and the estimated settlement meets serviceability requirements. The dead load of the structure and weight of soil and water above the structure provides resistance to rotation, along with the reaction of the soil under the base. Base friction, base adhesion, and/or horizontal soil resistance on the side of the foundation generate resistance to sliding. Analysis and design of this wall system are covered in Chapter 7.

2.2.2. Foundation Considerations.

2.2.2.1. When foundation materials are adequate, this wall system is durable, robust, and economical. The bottom of the base is below the zone subject to freezing and thawing, or other seasonal volume changes.

2.2.2.2. Walls founded on high-plasticity clays may have undesirable movements due to settlement, from shrink/swell, or from heave/rebound in cut areas with highly over consolidated soils. When foundation materials are inadequate, ground improvement may be possible as described in Chapter 12. Alternately, a deep foundation may be needed as described in section 2.3.

2.2.2.3. The wall foundation must be designed to manage seepage under the wall. A sheet pile cutoff may be required depending on water differential, wall base width, and foundation soil type.

2.2.3. Cast-in-Place Reinforced Concrete Cantilever Walls.

2.2.3.1. General. A cast-in-place (CIP) cantilever T-type or L-type reinforced concrete wall (T-wall or L-wall) consists of a concrete stem and base slab that form an inverted T or an L. An example of a T-wall is shown in Figure 2.1. An L-wall is a T-wall without a toe. The bottom of the base should be below the zone subject to freezing and thawing or other seasonal volume changes. Frost depth may be determined from local practices or by calculation.

2.2.3.2. The stem of the CIP cantilever wall may be reinforced by concrete counterforts or buttresses. These measures may provide stiffer wall stems and reduce deflection of under loading. However, typically it is more cost effective to achieve the required strength and stiffness by providing sufficient wall thickness and steel reinforcement.

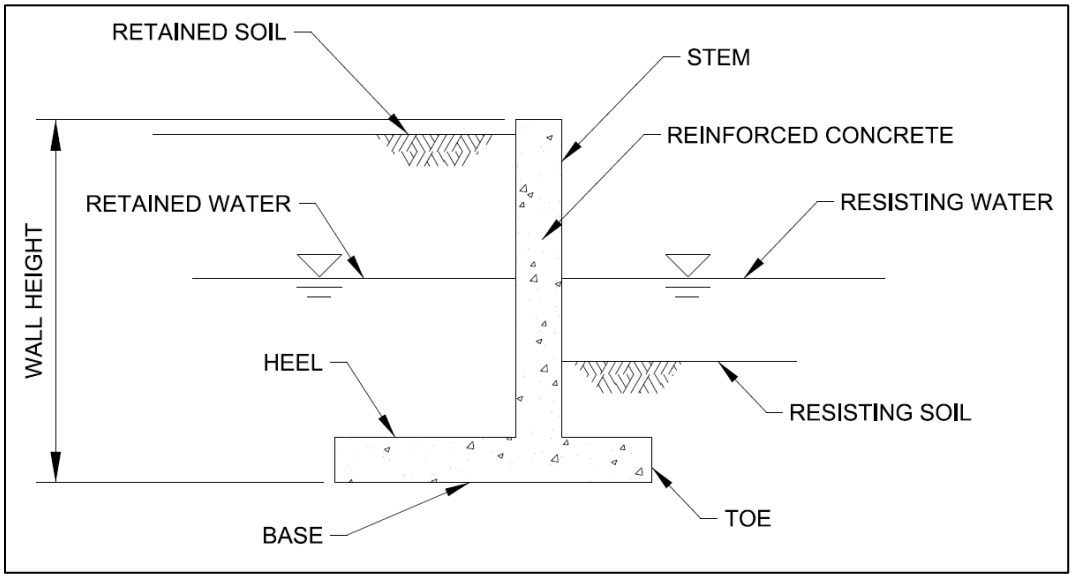

Figure 2.1. CIP Cantilever T-Type Reinforced Concrete Wall

2.2.3.3. Stability.

2.2.3.3.1. The stabilizing weight of the wall is supplied both by the weight of the concrete (WC) and by the weight of the soil and water above the base (WS1 and WS2) as shown in Figure 2.2. The base is made as narrow as practicable, while being wide enough to ensure that the wall does not slide, overturn, settle excessively, or exceed the bearing capacity of the foundation.

2.2.3.3.2. Driving lateral loads from the retained soil or water (P_D) are transmitted to the stem. This, in turn, transmits the lateral load to the base. The base shear (T) is equal to the sum of the driving lateral loads (P_D) and the resisting lateral loads (P_R). The resultant base reaction (N') is the sum of all vertical forces, including uplift from water when present (not shown in Figure 2.2). The location of the resultant (e) is determined by summing the moments of all forces about a point on the base (usually the toe) and dividing by the sum of all vertical forces (N').

2.2.3.3.3. Reinforcement in the concrete structural members resists induced moments and shears.

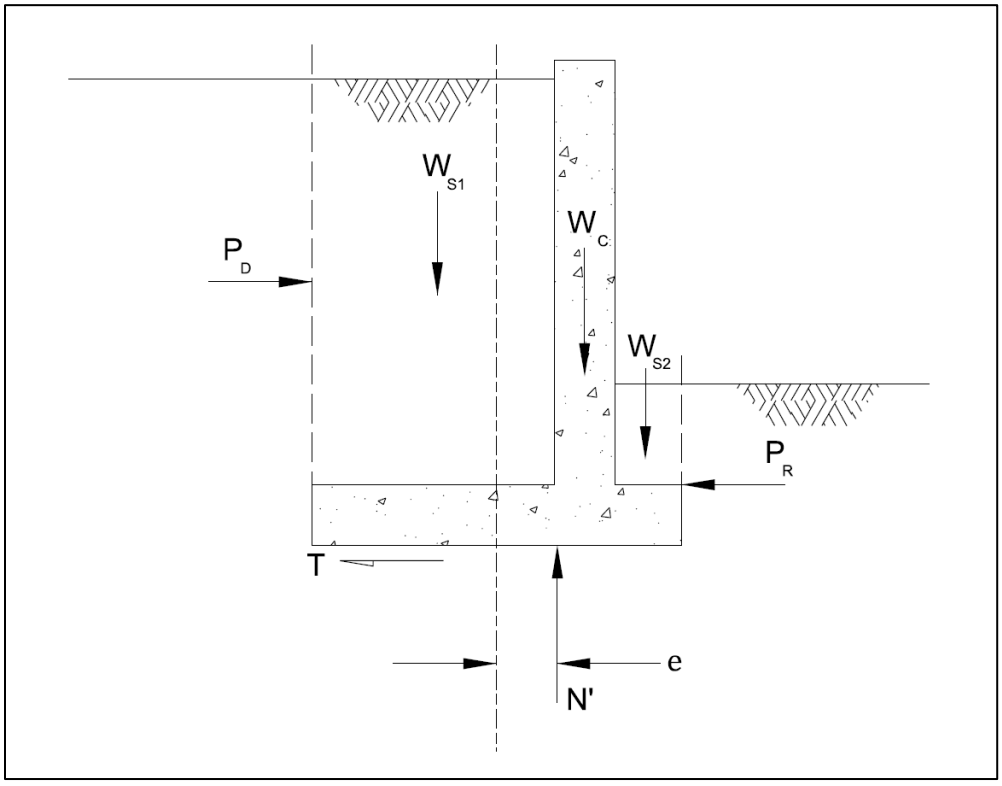

Figure 2.2. Forces on a Cantilever T-Type Reinforced Concrete Wall

2.2.4. Mass Concrete Gravity Wall.

2.2.4.1. A mass concrete gravity wall, as shown in Figure 2.3, consists of concrete that is designed without steel reinforcement. External forces and stability requirements on a gravity wall are the same as for a T-wall or L-wall. However, internal stability of the unreinforced concrete wall is also be considered. For usual loads, the wall is proportioned so that the resultant of the forces acting on any internal plane through the wall falls within the kern (middle third) of the section. More information on mass concrete gravity structures is provided in EM 1110-2-2200.

2.2.4.2. Conditions favoring mass concrete gravity walls are: shallow depth of overburden, a competent foundation, and an adequate source of fine and coarse aggregate for the required volume of concrete. The greater concrete volume generally makes this wall system more expensive than a reinforced concrete T- or L-wall.

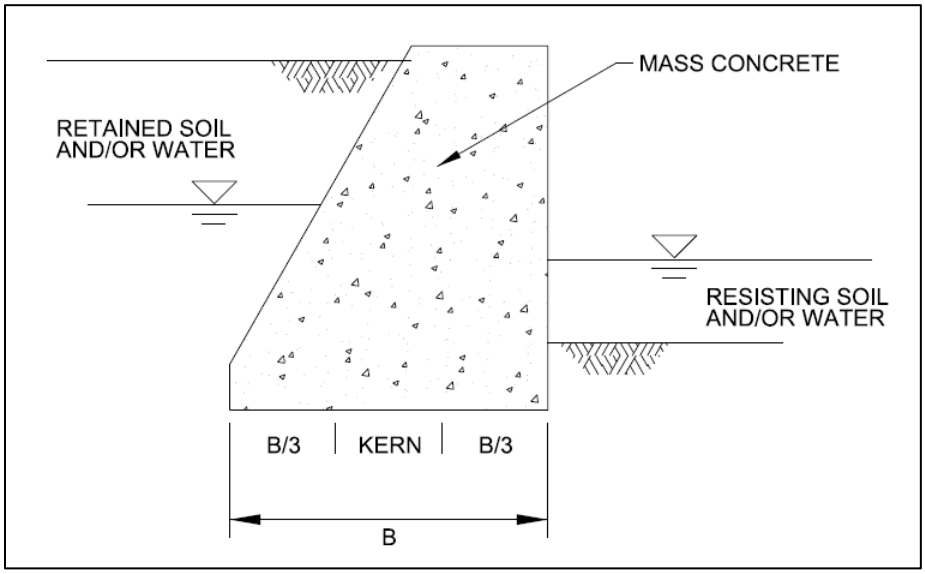

Figure 2.3. Mass Concrete Gravity Wall

2.2.5. Shallow-Founded Concrete Walls Advantages:

2.2.5.1. Durable and watertight.

2.2.5.2. Wall movement during loading is usually small enough to be unnoticeable.

2.2.5.3. Because the wall system relies on gravity for stability, it can provide robustness for overload or loss of resisting side soil.

2.2.5.4. This wall type is applicable to most wall heights.

2.2.5.5. Little routine maintenance is required.

2.2.6. Shallow-Founded Concrete Walls Disadvantages:

2.2.6.1. Soft soil foundations can lead to settlement, causing loss of height and/or damage to the joints unless soil improvement can be performed.

2.2.6.2. The width of the base may need to be quite wide (greater than the wall height) to meet all stability performance requirements.

2.2.6.3. Large excavations may be needed for installation.

2.2.6.4. Wet installations require unwatering.

2.2.6.5. Walls designed with a large dependence on passive resisting side soil pressures for stability can be vulnerable to a decrease in stability if scour occurs.

2.3. Concrete Walls Supported by a Deep Foundation.

2.3.1. General. A concrete wall supported by driven piles or drilled shafts can be used when the minimum design requirements (bearing capacity, sliding, resultant location, or settlement) cannot be achieved with a shallow-founded wall. It may also be useful if space limitations do not allow the base width required for a shallow-founded wall. Piles can be vertical (Figure 2.4c), battered (Figure 2.4a), or a combination of both (Figure 2.4b). Normal installation of drilled shafts is vertical.

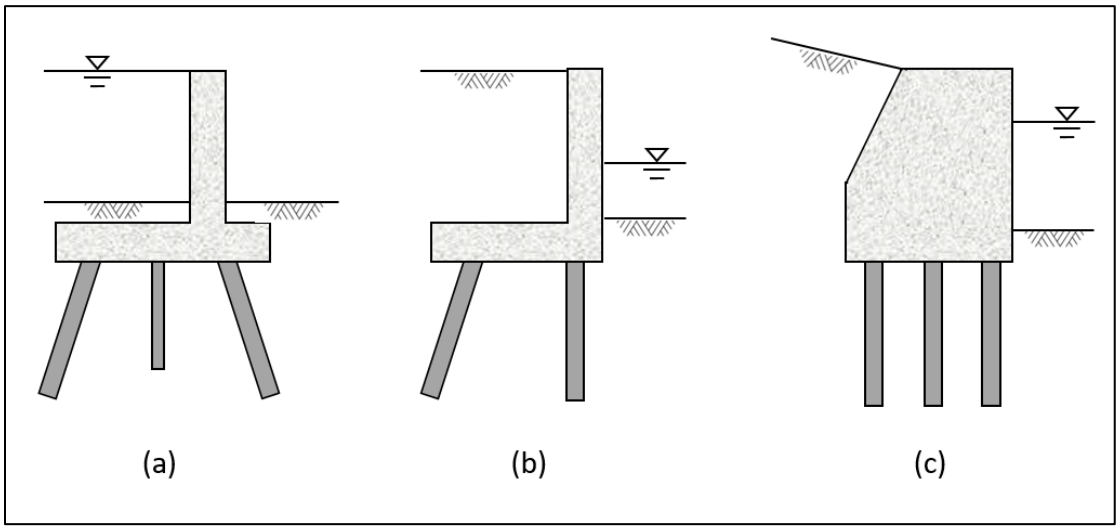

Figure 2.4. Concrete Walls Supported by a Deep Foundation

2.3.2. Stability. The stability for the system comes from lateral and axial resistance of the piles. The wall stem and the deep foundations are designed to resist the induced moment, shear, and axial forces that are transmitted to the stem. A sheet pile cutoff, as shown in Figure 2.4 and Figure 2.5, is used to manage the seepage that occurs when the soil settles and creates a void or a zone of softer soil under the base. Analysis and design of this wall system are covered in Chapter 8.

2.3.1. Configuration. As shown in Figure 2.4, reinforced concrete walls supported by deep foundations are typically an inverted “T” shape (a) or “L” shape (b). The wall stem is a cantilever. Mass concrete gravity walls are often trapezoidal (c) or stepped so that the wall decreases in width with height. The exposed face is usually vertical. This reduces the amount of concrete needed for the gravity wall.

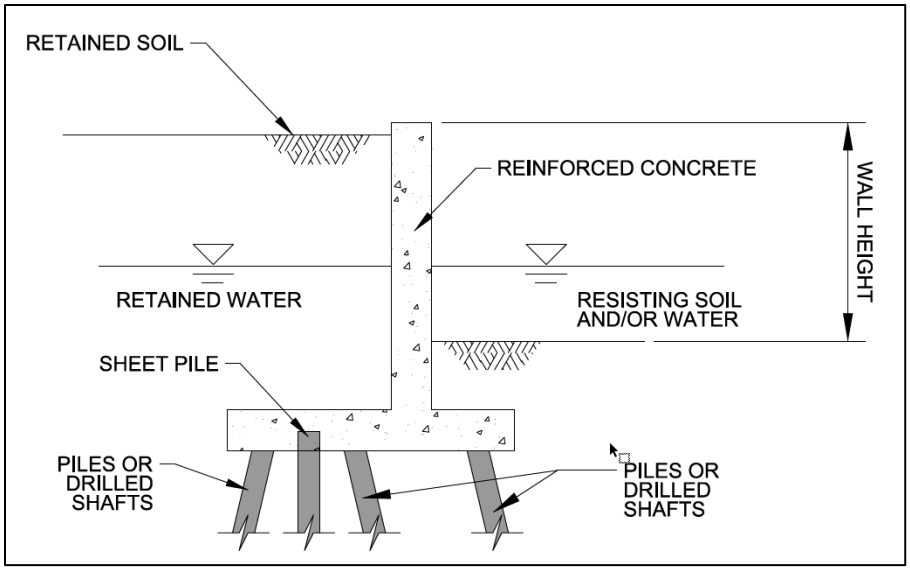

Figure 2.5. T-Wall Supported by Deep Foundation

2.3.2. Concrete Walls Supported by a Deep Foundation Advantages:

2.3.2.1. Durable and watertight.

2.3.2.2. The deep foundation makes this wall type very resilient to overload or to loss of resisting side soil.

2.3.2.3. Wall movement during loading is usually small enough to be unnoticeable.

2.3.2.4. This wall type is applicable to most wall heights.

2.3.2.5. Little routine maintenance is required.

2.3.3. Concrete Walls Supported by a Deep Foundation Disadvantages:

2.3.3.1. The deep foundations add design and construction costs relative to walls founded directly on soil or rock.

2.3.3.2. When used to retain water, sheet pile seepage cutoffs are required, adding to cost.

2.3.3.3. Wet installations require unwatering.

2.3.3.4. There are special concerns for pile-founded walls constructed on earthen levee embankments with compressible foundations.

2.3.3.5. Corrosion can be a concern for steel piles exposed to atmosphere, periodic wetting and drying, disturbed soils (in which oxygen may be present), or in corrosive soils.

2.4. Cantilever Pile Walls.

2.4.1. General. Cantilever pile walls are non-gravity systems without a base foundation or pile cap. The main wall elements are vertical and act as beams for transmitting horizontal loads. A cantilever pile wall derives its resistance to overturning solely through horizontal interaction with the surrounding soil. Typically, these are continuous pile systems (sheet piling) but non-continuous pile systems are sometimes used. Analysis and design of this wall system are covered in Chapter 9.

2.4.2. Stability.

2.4.2.1. Lateral soil and/or water pressures exerted on the wall tend to cause rigid body rotation of a cantilever pile wall about a rotation point near the tip of the wall as shown in Figure 2.6. Equilibrium is achieved by the balance of water pressure and of active and passive soil pressures. Below the point of rotation, active and passive pressures transition to opposite sides of the wall to maintain equilibrium as the tip moves toward the retained side. Note that full passive earth pressure must be developed at the ground line for stability.

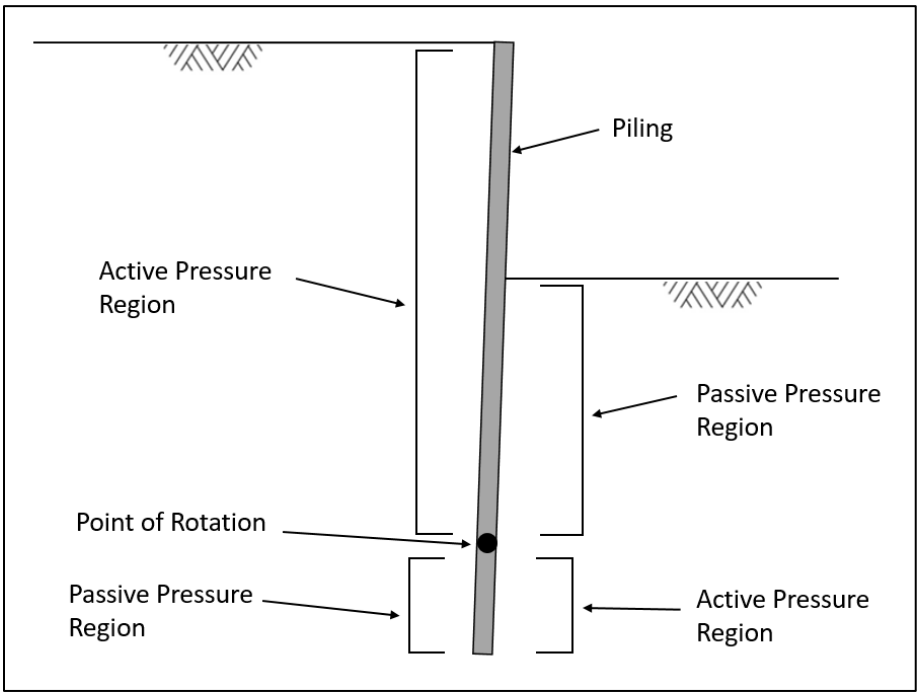

Figure 2.6. Earth Pressures on a Cantilever Pile Wall

2.4.2.2. Under certain conditions walls may translate rather than rotate. This can occur when soil layers at the bottom of the wall have lower passive pressure capacity compared to upper layers. This may occur when lower layers are soft or have high piezometric pressures.

2.4.3. Continuous Cantilever Pile Walls.

2.4.3.1. General. In a continuous cantilever pile wall, each of the vertical elements in a wall segment will have the same section and sheet pile type. Driven sheet piles are most commonly used, but other systems are occasionally employed.

2.4.3.2. Sheet Pile Walls. Commonly known as an I-wall, a sheet pile wall, as shown in Figure 2.7, consists of a driven, vibrated, or pushed row of interlocking vertical pile segments to form a continuous wall. The wall may extend to the full height with sheet pile, as shown in Figure 2.7, or it may be constructed with sheet piling in the embedded depth and a monolithic CIP reinforced concrete wall in the exposed height as shown in Figure 2.8.

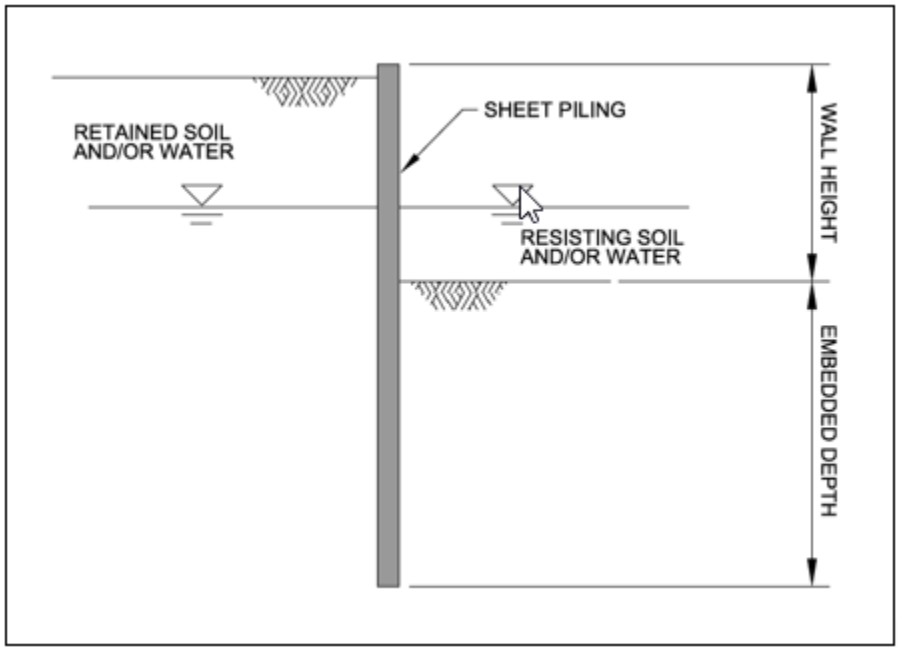

Figure 2.7. Sheet Pile Wall

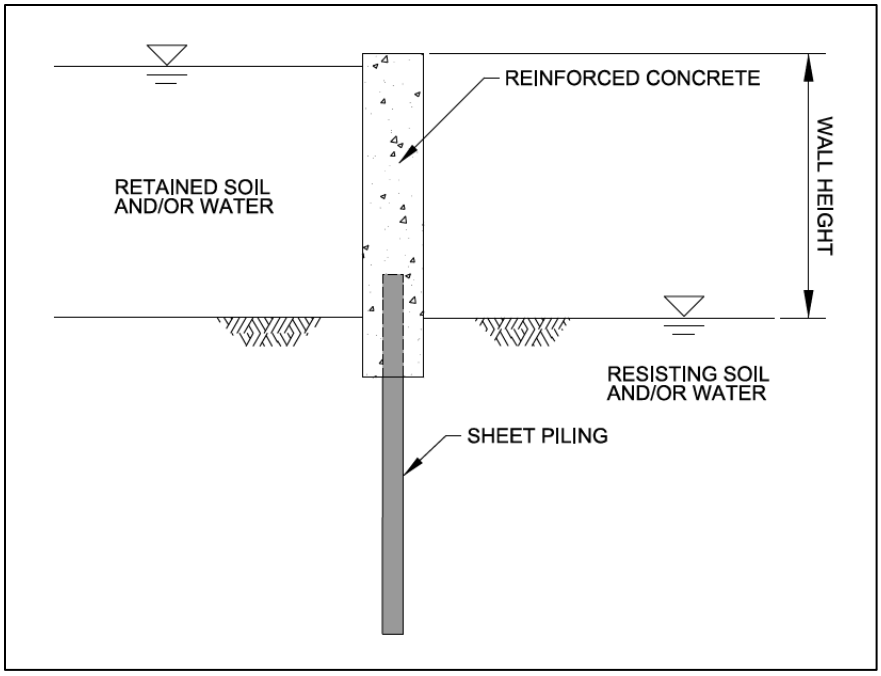

Figure 2.8. Sheet Pile Wall with Concrete Cap

2.4.3.3. Floodwalls. Walls constructed entirely with sheet piling (Figure 2.7) will have leakage through the interlocks when water is retained above the ground surface. The sheet pile interlocks need to be sealed above the ground to prevent excessive leakage. Corrosion protection is also needed for steel piles. Typically, cantilever pile floodwalls use reinforced concrete above the ground as shown in Figure 2.8. The base of the concrete is at or below the frost line. Reinforced concrete is less permeable; however, it can be more readily treated with architectural finishes and may have similar cost compared to walls made entirely of steel sheet pile.

2.4.3.4. Sheet Pile Wall Heights. Sheet pile walls are used with low wall heights. Height is normally less than 10 ft. (3 m) of exposed height measured on the protected side of the wall. In competent soils they may be up 15 ft. (4.5 m) in height. This wall type relies completely on passive soil resistance for stability. Therefore, conditions with soft soils and/or with downward slopes on the resisting side, such as on a levee, reduce maximum design wall heights. I-walls on earthen levee embankments will be limited to 4 ft. (1.2 m) in height unless full numeric analysis is used for design, as is described in Chapter 9.

2.4.4. Combined Wall Systems.

2.4.4.1. Combined wall systems are typically used when regular sheet piles are not strong enough to carry the required loads. Combined wall systems consist of two primary components, the king pile and the intermediary sheet piles, as shown in Figure 2.9. The intermediary sheet piles transfer horizontal loads to the king piles. The king piles carry the majority of the bending moment and shear and may also carry vertical loads. The king piles consist of either an H beam section or a pipe pile. A connector is welded to the king pile in order to provide interlock between the king pile and sheet pile.

2.4.4.2. The wall components are driven, vibrated, pushed, or drilled into place. Since the king pile carries the majority of the load, the intermediary sheet piles can be designed to be shorter in length than the king pile. In the latter case, this otherwise continuous wall system may behave as a non-continuous system.

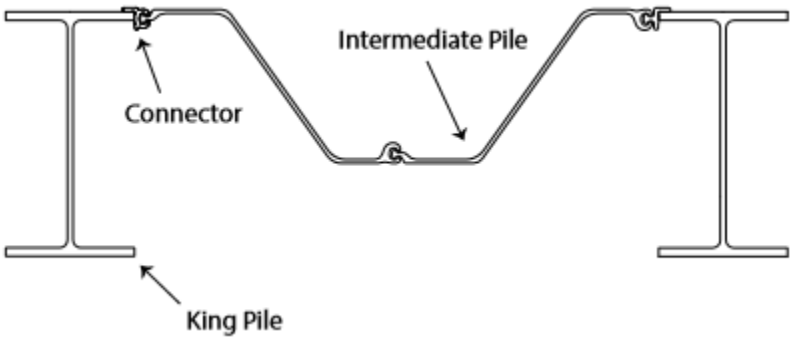

Figure 2.9. Combined Wall Plan View

2.4.5. Discrete Cantilever Pile Walls.

2.4.5.1. This type of wall is sometimes known as post-and-panel wall or soldier pile wall. Individual piles (drilled or driven, steel or concrete piles) are installed with a regular spacing. Then structural panels are used to span between the piles, as shown in Figure 2.10. The panels transfer loads from the retained material to the individual piles. The wall derives lateral resistance and moment capacity from the embedment of the piles. This wall system is typically used for walls founded in rock or in very stiff soils with pile spacing from 6 to 10 ft. (2 to 3 m). Because of seepage concerns at the base of the panel, this wall system is used for earth retention more than for water retention.

2.4.5.2. For top-down constructed earth retaining walls, the posts are more commonly called soldier piles. A portion of the load from the retained soil between the individual piles is transferred to the soldier piles through soil arching effects. The soldier piles are spanned by lagging, in order to retain the soil between the piles. The lagging can consist of wood, reinforced concrete, precast or CIP concrete panels, or reinforced shotcrete. Soldier pile and lagging walls used for permanent hydraulic applications would typically be faced with reinforced concrete for durability and water tightness.

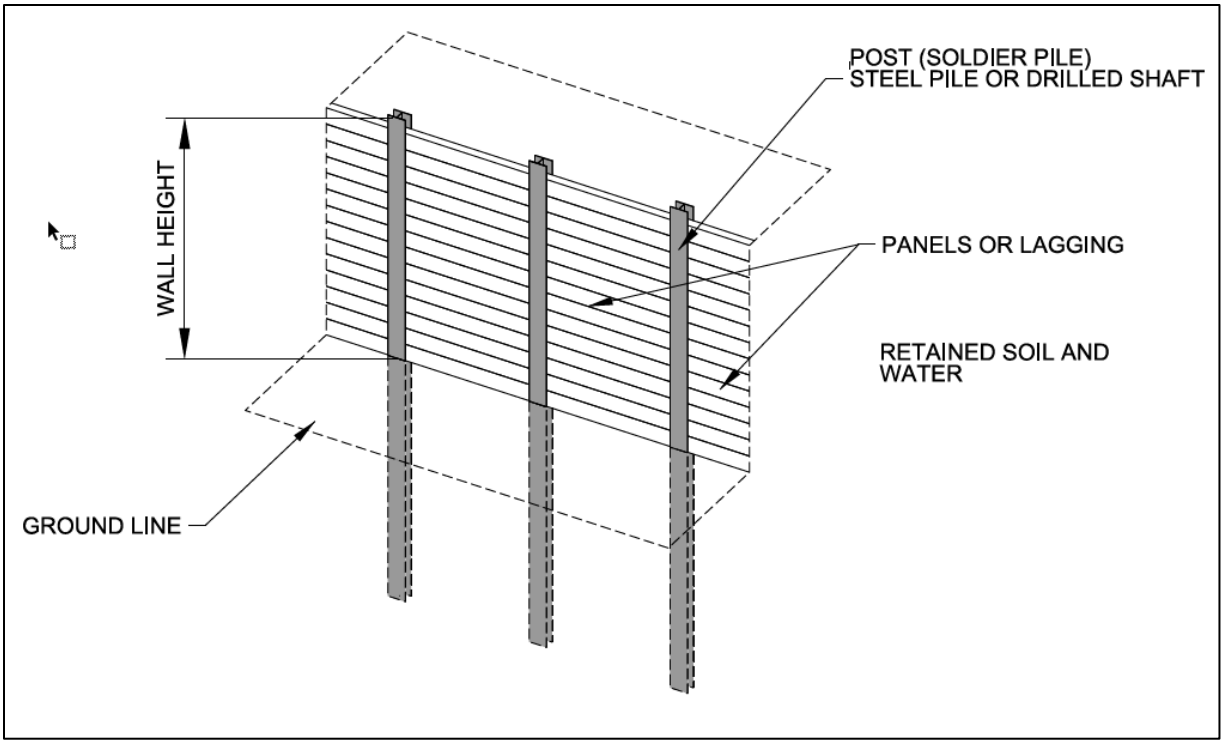

Figure 2.10. Discrete Cantilever Pile Wall

2.4.6. Cantilever Pile Walls Advantages:

2.4.6.1. May be installed in relatively close proximity to existing structures. Interaction with nearby existing structures should be accounted for in analysis and design.

2.4.6.2. Because excavation is not needed, this wall can be installed and then excavation can be performed to the project grade.

2.4.6.3. This wall system can be installed in the wet without dewatering.

2.4.6.4. It is durable when constructed of or capped with concrete.

2.4.6.5. May be less costly than concrete walls with deep foundations or shallow-founded concrete walls that require a sheet pile seepage cutoff.

2.4.7. Cantilever Pile Walls Disadvantages:

2.4.7.1. Deflections that are required to develop passive resisting pressures may cause undesirable movement under service loadings.

2.4.7.2. Heights are limited, except in very stiff soils or rock.

2.4.7.3. The wall relies entirely on lateral soil pressure resistance for stability; therefore, cantilever wall systems are less resilient than the previous two wall types if resisting side soil is removed due to scour, erosion, settlement, landscaping activities, or other mechanisms.

2.4.7.4. Without corrosion protection, exposed steel piles are subject to corrosion. This is particularly true at the water line when used in bodies of water. Corrosion protection can extend the life of the pile, but steel pile structures typically have a shorter life span than concrete structures.

2.5. Anchored Pile Walls.

2.5.1. General. An anchored pile wall derives its support from a combination of direct interaction with the surrounding soil and one or more anchors to inhibit movement at isolated points. All the systems described in the previous section for cantilever pile retaining walls may be anchored. There are two primary subtypes of anchored pile walls, passive single anchor walls and post-tensioned tieback walls.

2.5.2. Uses. Anchors are typically employed for earth retaining walls. They are almost never used for floodwalls or other walls that primarily retain water. Anchors are designed as a structural system that transmits tensile loads to the soil or rock beyond potential slip surfaces in the retained soil. The use of anchors enables these walls to be higher and deflect less than pile walls without anchors.

2.5.3. Passive Single-Anchor Pile Walls.

2.5.3.1. In a passive single-anchor pile wall the anchors are attached to the wall at one elevation, as shown in Figure 2.11. Tie rods connect the wall to anchorage elements and are not post-tensioned. The anchorages may be composed of deadman anchors, as shown in Figure 2.11, embedded sheet pile walls, drilled shafts, driven piles, or driven pile bents.

2.5.3.2. Driving and resisting earth forces on this wall type are similar to the forces on a cantilever pile wall. Because the anchor is not post-tensioned, the tie rod and the anchorage will deflect under load. The resulting deflection of the wall is sufficient to develop active soil pressures on the driving side of the wall. Requirements for analysis and design of this wall system are covered in Chapter 10.

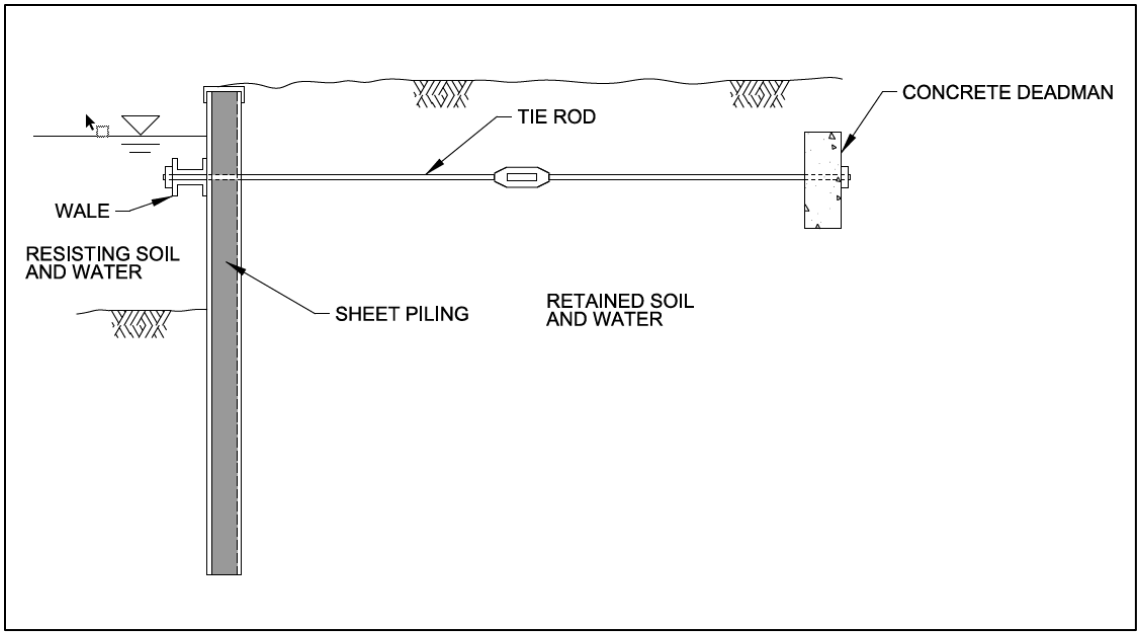

Figure 2.11. Passive Single-Anchor Pile Walls

2.5.4. Post-Tensioned Tieback Wall.

2.5.4.1. General. Walls with tieback anchors are typically constructed using a top-down sequence. One or more rows of anchors can be used as shown in Figure 2.12. The anchor rods are grouted and post-tensioned. The post-tensioning greatly reduces deflections. By pulling the wall into the soil, the post-tensioning also greatly changes the design soil pressures compared to passive anchor walls. The stiffness of the wall also affects the design soil pressures. Typically, walls of this type are constructed of sheet piling or steel soldier piles, which can be considered flexible.

2.5.4.2. Design. Requirements for analysis and design of post-tensioned tieback walls are provided in Chapter 11. The guidance in Chapter 11 is primarily for flexible tieback walls. Tieback walls with stiff elements, such as concrete secant piles or drilled shaft soldier piles, result in different design soil pressures. Stiff tieback walls can be used only in consultation with and approved by CECW-EC.

2.5.4.3. Anchors. The anchorages of tieback walls consist of drilled and grouted bars and multi strand anchors. Tieback anchor walls are constructed in a top-down fashion with staged phases of excavation, installation of the anchor system, and post-tensioning of the anchors. The initial construction sequence is the same as with the excavation of a cantilever pile wall. When the excavation reaches a depth limited by the strength or deflection of the pile, a row of anchors is installed and post-tensioned. After that row is completed the next successive stage of the wall height can be excavated. This sequence continues until the design depth is reached.

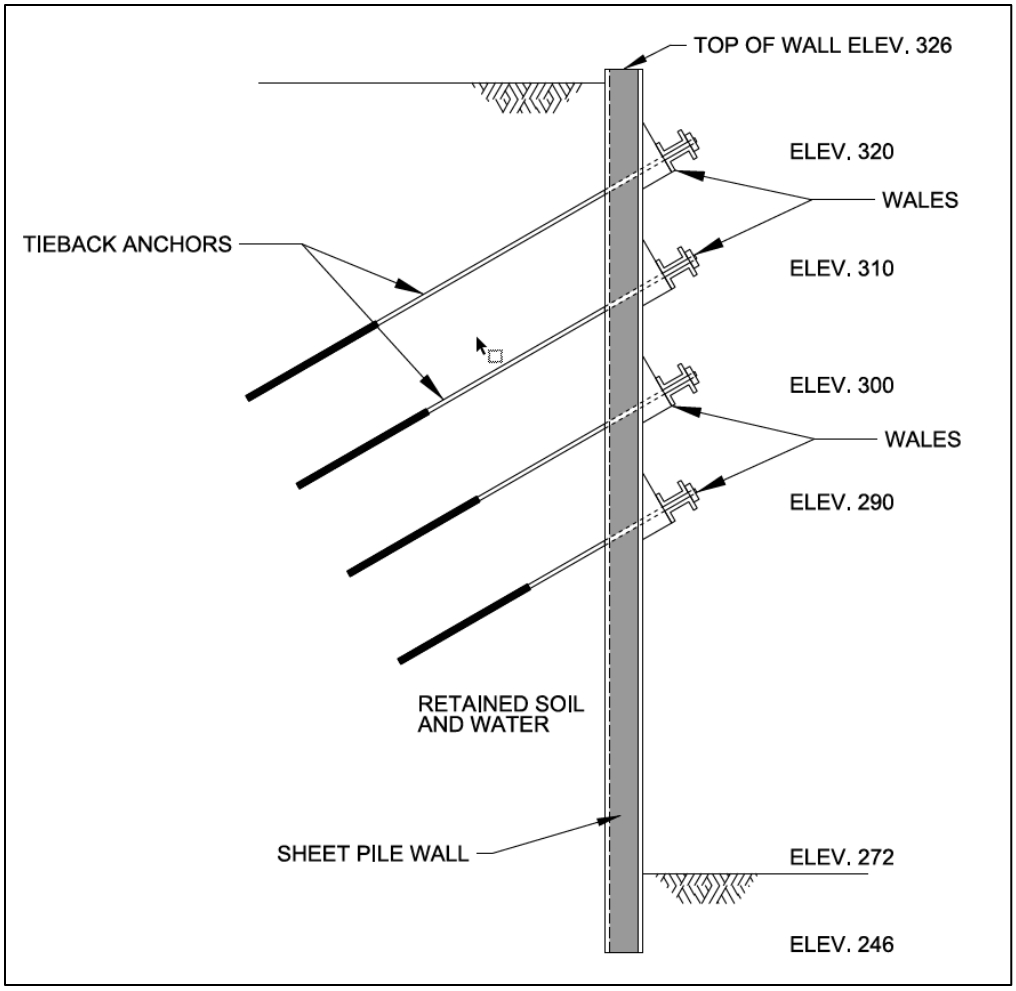

Figure 2.12. Example: Post-Tensioned Tieback Wall

2.5.5. Anchored Pile Walls Advantages:

2.5.5.1. May be installed in relatively close proximity to existing structures.

2.5.5.2. Installation of the piles does not require excavation. The piles can be installed and then excavation can be performed to the design grade.

2.5.5.3. The anchored walls can retain much greater heights of soil than cantilever pile walls.

2.5.5.4. Deflections can be much reduced compared to cantilever pile walls.

2.5.5.5. This wall system can be installed in the wet (without dewatering) although the anchors are installed in the dry.

2.5.5.6. It is durable when constructed of (or capped with) concrete.

2.5.6. Anchored Pile Walls Disadvantages:

2.5.6.1. Exposed steel piles are subject to corrosion. This is particularly true at the water line when used in bodies of water. Corrosion protection can extend the life of sheet pile, but steel sheet pile structures typically have a shorter life span than concrete structures.

2.5.6.2. Is more robust and redundant than cantilever walls but less than concrete walls supported by soil, rock, or deep foundations.

2.5.6.3. The anchors may extend outside of the project site and require purchase of additional easements.

2.5.6.4. Anchors may be susceptible to corrosion and are difficult to inspect after installation.

2.5.6.5. The wall depends on resisting lateral soil pressure at the toe for stability. The wall may become unstable if this soil is lost from scour, erosion, or other removal processes.

2.6. Other Wall Systems.

2.6.1. Braced Pile Walls.

2.6.1.1. General. Braced pile walls consist of a continuous sheet piling wall supported by battered piles, as illustrated in Figure 2.13. This creates a wall that is a combination of a wall with a deep foundation and a cantilever pile wall. Usually, this wall type is created by retrofits that strengthen existing sheet pile walls. Occasionally they have been used for original construction.

2.6.1.2. Design. Because of the batter of the piles, consideration is given to the resulting vertical forces in the sheet pile. Therefore, the composite wall system acts primarily like a wall with a deep foundation and is analyzed and designed as described in Chapter 8. These walls are sometimes analyzed as a single anchored wall as described in Chapter 10, but the vertical component of load in the brace is accounted for in the sheet pile.

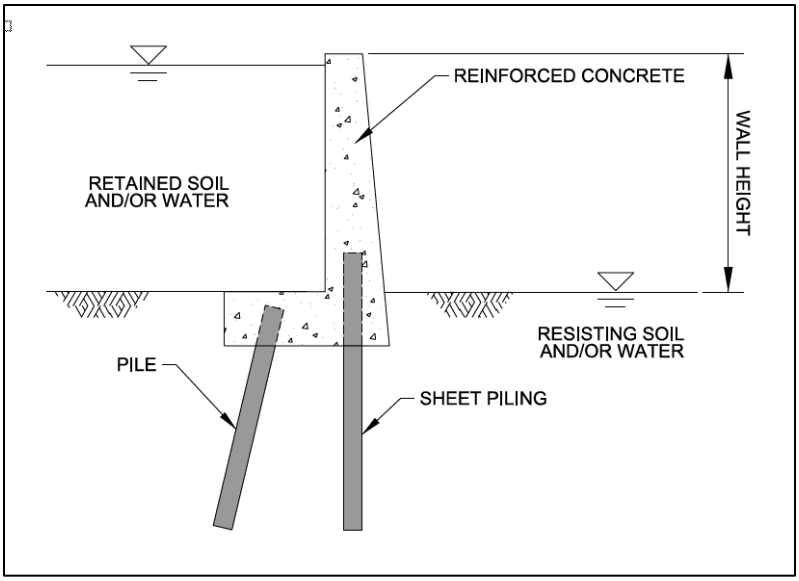

Figure 2.13. Braced Sheet Pile Wall

2.6.2. Demountable Floodwalls and Closure Structures.

2.6.2.1. Floodwalls sometimes require openings through the flood barrier for streets, railroads, trails, or other reasons. During high-water events, these openings are closed by an erectable stem or with floodgates. Figure 2.14 shows an example of an erectable stem with a post and stoplog system. Demountable floodwalls and closures are used in limited numbers and lengths because they require operation or erection before a flood and usually have more leakage than permanent walls. Factors that must be considered for when selecting demountable floodwalls are: the time and resources required to make the closure, required maintenance of the closure elements, leakage around temporary elements and gate seals, and requirements for storage of temporary elements.

2.6.2.2. The permanent base or foundation is analyzed and designed according to the type of wall system used. Typically, the foundation is reinforced concrete founded on a shallow or deep foundation. Demountable wall foundations are usually analyzed two dimensionally but the reactions from the closure system may require three-dimensional (3D) analysis. Guidance for the design of floodgates and metal support members is provided in EM 1110-2-2107. See Chapter 12 for more information on closures for road and railroad crossings.



Figure 2.14. Demountable Floodwall (St. Paul District)

2.6.3. Other Wall Systems Not Included in This Manual. Wall systems not included in this manual include but are not limited to prefabricated modular gravity walls (bin walls, crib walls, gabion walls), mechanically stabilized earth walls, and soil nail walls. These wall systems are not typically used for hydraulic applications. These walls systems can be used in consultation with and approval by CECW-EC. EM 1110-2-2503 covers steel sheet pile cell walls.

2.7. Materials.

2.7.1. Introduction. Permanent walls for hydraulic applications should be durable and provide a long service life. This section provides an overview of materials used in the systems previously described. According to ER 1110-2-8159, a minimum project service life of 100 years will be used for major infrastructure projects such as locks, dams, and levees. The materials used for the wall need to be consistent with this requirement. Maintenance, such as painting, may be used to achieve the minimum service life.

2.7.2. Concrete.

2.7.2.1. CIP Concrete. CIP concrete is the most common material used for construction of walls that are covered in this manual. CIP concrete is also utilized in drilled shafts used for deep foundation elements. It provides durability and water tightness for the long service life of hydraulic structures. CIP concrete materials and mixture proportioning, with appropriate water-

cement ratios for durability, should follow EM 1110-2-2000. EM 1110-2-2104 provides guidance for design of reinforced concrete.

2.7.2.2. Reinforced Concrete. Typically, a minimum concrete compressive strength of 4,000 psi (27.5 MPa) is used for CIP reinforced concrete walls. For walls susceptible to freeze and thawing, sulfate, or external sources of chlorides, refer to the latest version of American Concrete Institute (ACI) 318 for minimum concrete strength, maximum water cement ratios, and other durability requirements. Reinforcement is normally 60,000 psi (41.2 MPa) deformed carbon steel bars according to American Society for Testing and Materials (ASTM) A615 or ASTM A706.

2.7.2.3. Plain Concrete. A concrete compressive strength of 2,000 to 2,500 psi (15 to 17 MPa) will usually meet the requirements for plain concrete, typically a gravity type wall. This lower compressive strength concrete is advantageous and recommended for mass concrete to minimize thermal and shrinkage cracking due to lower heat of hydration. Where the environment requires durability, such as at the outer surface of the wall, the higher strength should be achieved with the appropriate water-cement ratio from EM 1110-2-2000. The section thickness generally is such that the wall will be considered mass concrete. Therefore, attention will need to be taken in the mix design and construction methods for control of temperature differentials to control cracking.

2.7.2.4. Precast Concrete. Elements of reinforced concrete walls are sometimes constructed of precast concrete for efficiency in construction. It can be used for walls that need to be constructed within short time constraints for the construction, such as foundations for road or railroad closures. It may also be beneficial for large projects with repeated elements. Care should be taken to prevent excessive stress or damage to precast elements during construction. Precast elements can be damaged during moving, storing, and installation and therefore additional QA/QC may be required.

2.7.2.5. Prestressed Concrete.

2.7.2.5.1. Prestressed concrete can be used for concrete piles in deep-founded walls. See EM 1110-2-2906 for more information. Prestressed concrete may be an option for sheet piling for a limited number of applications covered by this manual. However, this type of piling may not be readily available in all localities.

2.7.2.5.2. The sheet piles are precast sheets 6 to 12 in. (15 to 30 cm) thick, 30 to 48 in. (75 to 120 cm) wide and provided with tongue-and-groove or grouted joints. Concrete sheet piles are usually prestressed to facilitate handling and driving. Special corner and angle sections are typically made from reinforced concrete due to the limited number required. Figure 2.15 shows typical concrete sections. A bevel across the pile bottom, in the direction of pile progress, forces one pile against the other during installation.

2.7.2.5.3. The grouted-type joint is cleaned and grouted after driving to provide a reasonably (at best) watertight wall. Because of the limited watertightness, precast concrete sheet piles must not be used for floodwalls or for other walls that primarily retain water, except in consultation with and approval by CECW-EC. If used to retain water, the portion above the ground surface should be provided with additional concrete capping/facing. For earth retaining walls, concrete sheet piling can be advantageous for marine environments, streambeds with high abrasion, and where the sheet pile is counted on to support axial load. Past experience indicates this pile can induce settlement (due to its own weight) in soft foundation materials. In this case the water tightness of the wall will probably be lost.

2.7.2.5.4. Because there is no physical connection at the joints, movements from differential settlement, overload, scour, or other unexpected situations can lead to loss of the continuous surface. The relatively thick piles cannot be readily driven in dense soils or in locations where obstructions may be encountered. The concrete may also be subject to damage during installation. Because of these concerns, before using prestressed concrete sheet piling the engineer must perform a risk assessment that ensures that project risk is tolerable. See Chapter 3 for more information and requirements for performing risk assessment. The engineer must also ensure that the soils allow the piles to be installed properly and without damage.

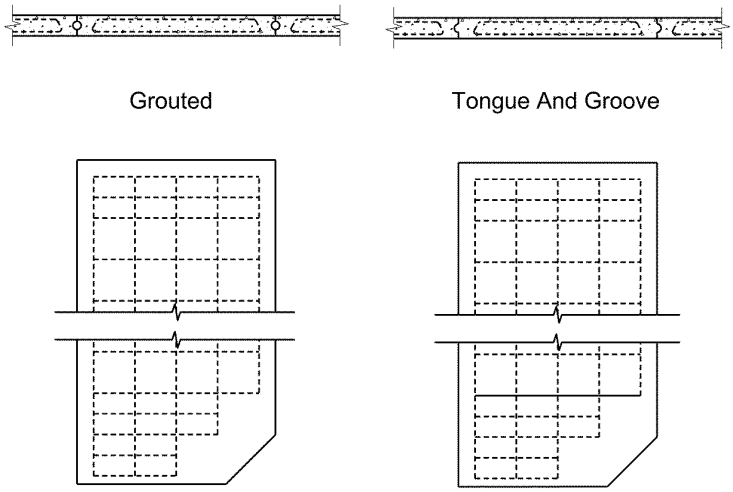

Figure 2.15. Typical Precast Concrete Sheet Piling Sections

2.7.2.6. Roller Compacted Concrete (RCC). RCC is sometimes used in place of mass concrete. Guidance for the use of roller compacted concrete is provided in EM 1110-2-2006.

2.7.3. Structural Steel.

2.7.3.1. Structural steel is used for steel piles and sometimes used in walls at openings, closures, and utility crossings. It is used in anchored walls for items such as anchor head bearing seats and wales. Guidance for steel piles is provided in EM 1110-2-2906. Guidance for the uses of structural steel for other purposes is provided in Chapters 7 through 11.

2.7.3.2. Structural steel exposed to free oxygen, such as in the atmosphere, near the surface or at the splash zone in water, in disturbed soils (in which oxygen may be present), or in corrosive soils, requires a corrosion protection system in order to provide adequate service life. More information is provided in EM 1110-2-3400. See section 12.6 for more information on corrosion protection of steel piles (deep foundation piles and sheet piles).

2.7.4. Steel Sheet Piling.

2.7.4.1. Steel is the most common material used for sheet piling walls due to its inherent strength, stiffness, ductility, relative light weight, and long service life when protected from corrosion. These piles consist of interlocking sheets manufactured to conform to the requirements of the ASTM Standards A328, A572, or A690. Sheet piling is commonly specified to be ASTM A572.

2.7.4.2. Steel sheet piles are available in a variety of standard cross sections. The Z-type piling is predominantly used in the wall applications covered in this manual because bending strength governs the design. Figure 2.16 shows Z-type steel sheet piling stored at a construction site. The sheets are normally driven in pairs. When interlock tension is the primary consideration for design, an arched or straight web piling should be used. Turns in the wall alignment can be made with standard rolled, bent, or fabricated corners.



Figure 2.16. Z-Type Steel Sheet Piling

2.7.4.3. Z-type steel sheet piling is manufactured with either hot-rolled or cold-formed manufacturing processes. The different processes result in differences in interlock configurations, as illustrated in Figure 2.17. The hot-rolled interlocks are tighter and stronger than the cold-formed interlocks. The tighter interlocks in hot-rolled piling provide greater resistance to seepage. They also provide greater ability to share loads laterally when there is either unequal loading or an unforeseen weak zone in the foundation along the length of wall. Because of this, cold-formed sheet piling can be used for critical walls (defined in section 3.2.1) only in consultation with and approval by CECW-EC.

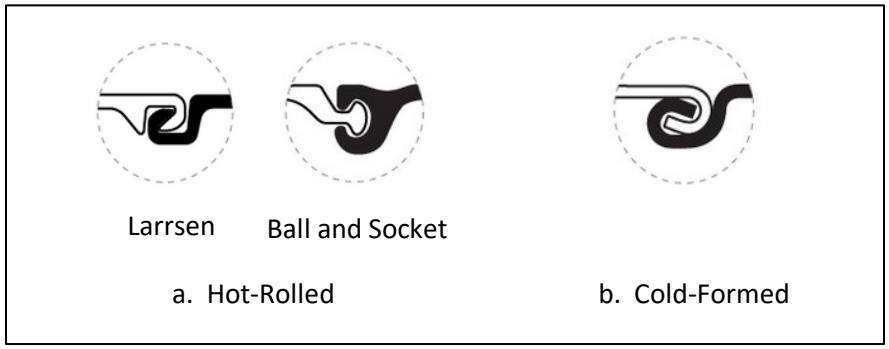

Figure 2.17. Typical Steel Sheet Piling Interlocks

2.7.4.4. Normal walls (as defined in section 3.2.1) can be constructed with either hot-rolled or cold-formed piling. However, the looser interlocks for cold-formed sheet piling are much more permeable than hot-rolled sheets. Walls used as seepage barriers should be constructed with hot-rolled sheets. If cold-formed sheet piling is used for a seepage barrier then joint sealant is needed for adequate performance. For both normal and critical walls in which resistance to seepage through the sheet pile is critical to the design or performance, hot-rolled sheets should be used with joint sealant.

2.7.5. Polyvinyl Chloride.

2.7.5.1. Polyvinyl chloride (PVC) is sometimes used for sheet piling in light duty applications. General use of PVC is for earth retaining walls. PVC has much less strength (by an order of magnitude) and stiffness (by two orders of magnitude) than steel. However, it is more corrosion resistant and less expensive than steel. It cannot be readily driven in as many types of soil as steel. The pile interlocks are not as strong as in steel sheet piling and therefore provide less robustness and ability to carry overloads. Specific guidance and information for the use of PVC sheet pile is provided in Appendix B.

2.7.5.2. PVC sheet piling can be used for critical walls (defined in section 3.2.1) only in consultation with and approval by CECW-EC. Prior to deciding to use PVC sheet piling for a critical structure, a risk assessment must be performed. The risk assessment must evaluate all potential failure modes and loading conditions including flood loading, wave loading, and impact loading. The risk assessment should ensure that the PVC sheet piling as a floodwall, dam wall, dam crest wall, etc. does not pose an intolerable risk to people, property, and infrastructure behind it. See Chapter 3 for more information and requirements for performing risk assessment.

2.7.6. Composite. Walls of sheet piling made from fiberglass and resin can be used in situations where PVC sheet pile is used. However, at the time of publication of this manual there were no standards for specification or design of walls with this material. Therefore, they are not covered here.

2.7.7. Aluminum. The use of aluminum in hydraulic wall applications is typically confined to stoplogs and bulkheads for closure structures. For these purposes, its light weight and corrosion resistance can offset the increased cost compared to steel.

2.7.8. Timber. Wood is not commonly used for permanent hydraulic retaining walls and is not covered by this manual.

2.8. Wall Systems Applied by Wall Type.

2.8.1. Introduction. Wall types covered in this manual can be separated into general categories based on the intended purpose and major loading of the wall. This section presents the wall types and the systems typically used.

2.8.2. Floodwalls. Floodwalls are walls built along a river or a coast to reduce the risk of flooding to adjacent land. Floodwalls are subjected to temporary flood loads with durations ranging from hours to months. Typically, they are located on existing grade, but may also be located on top of levee embankments. Floodwalls may also retain earth when flood conditions are not occurring and function as earth retaining walls. Common floodwall systems include cantilever T-type with shallow or deep foundations and cantilever I-type walls. Post and panel walls have been used for sites with very stiff soil or rock foundations. For greater robustness and redundancy, T-walls should be used unless site constraints prohibit it.

2.8.3. Earth Retaining Walls.

2.8.3.1. Earth retaining walls primarily retain earth although water in or above the backfill can be an important component of the loading. Retaining walls for hydraulic applications are found in a variety of locations. These locations include channels, control structures, head walls (pipe inlets/outlets), spillways, stilling basins, locks, wharfs or piers, and in levees or dams.

2.8.3.2. The most common wall system used is the reinforced concrete T-wall with a foundation appropriate for the site. Concrete gravity walls are rarely used in new projects although they can be found in existing lock or dam projects and seawalls. Cantilever and anchored pile walls are used for top-down construction and for in-the-wet installations when dewatering is not feasible. They are also used to reduce the amount of excavation required for installation.

2.8.3.3. Earth retaining walls used for wharfs, piers, and on coast lines are commonly known as bulkheads. Additional information regarding selection, configuration, loading, and armoring of bulkheads can be found in EM 1110-2-1614. Bulkheads will be analyzed and designed according to the corresponding wall system herein.

2.8.4. Dam Walls. Dam walls are part of a damming surface and may retain water and/or waves over long periods of time. Typical applications of dam walls are walls used to transition from embankments to abutments or spillways. For concrete structures that form the main damming surface, see EM 1110-2-2200 for concrete gravity dams, EM 1110-2-2201 for arch dam design, and EM 1110-2-2607 for navigation dams. Dam wall systems typically used and covered in this manual are concrete T-type walls or concrete gravity walls. Cellular sheet pile structures are occasionally used for permanent dam walls but are not covered by this manual, see EM 1110-2-2503.

2.8.5. Dam Crest Walls. Dam crest walls (or parapet walls) are located on the top of an earth dam embankment. Their purpose is to reduce wave overtopping or provide extra height to correct hydrologic deficiencies. The primary loading is from rare wave events or extreme pool levels. These walls are not loaded under normal conditions. Wall systems commonly used for dam crest walls are the same as described for floodwalls. Because of their location, dam crest walls have special design requirements provided in paragraph 4.4.3.4.

2.8.6. Seawalls. Seawalls are used in coastal areas and have the primary purpose of wave interception. EM 1110-2-1614 provides information on selection, configuration, loading, and armoring of seawalls. Seawalls will be analyzed and designed according to the corresponding wall system herein.

2.9. Mandatory Requirements.

2.9.1. Precast concrete sheet piles must not be used for floodwalls or for other walls that primarily retain water, except in consultation with and approval by CECW-EC.

2.9.2. Before using prestressed concrete sheet piling the engineer must perform a risk assessment that ensures that project risk is tolerable.

2.9.3. Cold-formed sheet piling can be used for critical walls (defined in section 3.2.1) only in consultation with and approval by CECW-EC.

2.9.4. PVC sheet piling can be used for critical walls (defined in section 3.2.1) only in consultation with and approval by CECW-EC.

2.9.5. Dam crest walls must not be used to provide a barrier surface for the static pool except for extreme loads.

Chapter 3
Risk Considerations and Potential Failure Modes

3.1. Introduction.

3.1.1. USACE has adopted a risk-informed approach for new designs and/or modifications to its dam and levee systems. This approach does not replace the need for deterministic design requirements, but rather supplements these requirements by identifying, evaluating, and effectively reducing risks associated with the project.

3.1.2. This manual does not describe the risk quantification or assessment process, but instead provides guidance and recommendations within each phase of the wall's life cycle that are informed by risk. This chapter provides information on how risk is incorporated into the design and evaluation of walls. It also contains information on potential failure modes (PFM). The PFMs are used to inform all aspects of risk-informed decision making related to walls. Chapter 13 provides risk considerations for construction. Chapter 14 provides risk considerations for evaluation. Chapter 15 provides risk considerations for operation and maintenance of walls.

3.2. Incorporation of Risk in Design and Evaluation of Walls.

3.2.1. Deterministic Analysis.

3.2.1.1. General. For design and evaluation of walls, performance modes are used to address potential failure modes, as described in Chapter 4. This manual provides deterministic criteria (factors of safety, load factors, etc.) for wall performance modes that are intended to result in walls with very low probability of failure. For the purpose of establishing minimum requirements for deterministic analysis of structures with differing consequences, walls must be designated as either Critical or Normal.

3.2.1.2. Critical Structures. Critical structures are those where failure could result in the potential for one or more loss of life. Loss of life could result directly from breach (uncontrolled release of water through a gap in the wall) or indirectly from flooding damage to a lifeline facility. A risk assessment for a dam or levee can help inform the potential for loss of life determination. Hazard potential classification for dams can also be used. Guidance on the determination of hazard potential is provided in ER 1110-2-1806 and ER 1110-2-1156. Examples of classification of structures according to probable loss of life are provided in Appendix H of EM 1110-2-2100.

3.2.1.3. Economic or Environmental Consequences. In some cases, potential for extreme economic or environmental loss, as determined by the engineer, may be justification for the designation of a structure as critical.

3.2.1.4. Normal Structures. All structures not meeting the definition of Critical in the previous paragraphs are Normal structures.

3.2.1.5. Requirements. Critical structures may have different requirements than normal structures. For instance, structures designated critical are required to be designed using larger, less frequent loads than normal structures (section 6.3). The requirements for critical structures are intended to provide structures with lower probability of failure. They are also intended to provide additional robustness and redundancy if overload occurs or failure is initiated.

3.2.2. Risk Assessment.

3.2.2.1. General. The inclusion of risk assessments into the design phases is the natural progression of risk-informed policies to more comprehensively achieve project objectives. All risk drivers are identified. An understanding is developed for how to efficiently reduce risk (structurally and non-structurally) within the limits of the authorized project. For design, minimum requirements in this manual and the tolerable risk guidelines must be met. Use of risk assessment in evaluation is described in Chapter 14.

3.2.2.2. Guidance. The USACE Risk Management Center is responsible for the development, dissemination, and interpretation of methodology guidance for use in conducting risk-informed evaluation of new project designs or modifications to existing projects. Methodology contained in USACE – U.S. Bureau of Reclamation (USBR) Best Practices in Dam and Levee Safety Risk Analysis, ER 1110-2-1156, and other USACE guidance is used to administer the dam and levee safety programs.

3.2.2.3. Consequences. Risk is a measure of the probability and severity of undesirable consequences. The guidance provided in this manual addresses potential failure modes that may result in consequences. Consequences may be loss of life or economic losses from a breach. For earth retaining walls, failure rarely results in a breach and consequences are usually economic rather than life safety. Economic consequences may include the loss of function of the facility supported by the wall and the costs to restore the wall. Calculation of consequences is not described in this manual.

3.3. Potential Failure Modes.

3.3.1. General. A potential failure mode (PFM) is the chain of events leading to a failure. A failure mode can lead to uncontrolled release of water from a dam or levee resulting in consequences such as life loss or economic/environmental damages. Alternately, failure modes can result in loss of service for navigation and earth-retaining structures. USACE districts responsible for the design, evaluation, construction, inspection, or modifications of walls should develop an understanding of wall-related PFMs and how the probability of failure may be reduced.

3.3.2. Potential Failure Mode Progression.

3.3.2.1. Failure Mode Process. Failure of a wall, dam, or levee related to a wall occurs with a progression of events. A loading (impounded water, earthquake, etc.) must be applied. The loading must cause a limit state to be exceeded and failure initiated. A defect or flaw may be present to enable this. The failure then progresses to a state where consequences are realized, such as a breach.

3.3.2.2. Progression. Progression to a state that results in consequences may be almost instantaneous, such as in a shear failure of a concrete cantilever. Alternately, it may require many steps of progression, such as for internal erosion failure from seepage under a wall. Depending on the failure mode and amount of movement, initial failure of a wall may result in wall openings with dimensions that limit the amount of consequences that occur. For significant consequences from breach to occur, movement and failure of the wall usually must progress over one or more monoliths.

3.3.2.3. Intervention. If developing failure modes are detected before progression is complete, it may be possible to intervene and prevent or limit consequences. However, the intention is that the risk-informed process will help to provide walls that have very low probability of initiating and progressing to failure. Thereby, intervention is not expected to be needed to provide adequate performance.

3.3.2.4. Potential Failure Mode Event Tree Example. Figure 3.1 shows an example of a failure mode event tree for a specific failure mode of sliding of a shallow-founded floodwall. The event tree illustrates the full progression of a failure mode. The first node of the event tree is the presence of a load. The remaining nodes are initiation and progression to a full breach. The progression of the failure may be halted at any node. Intervention and detection are accounted for at a single node but may occur at any of the preceding nodes. With probabilities assigned at each node, the probability of breach can be estimated.

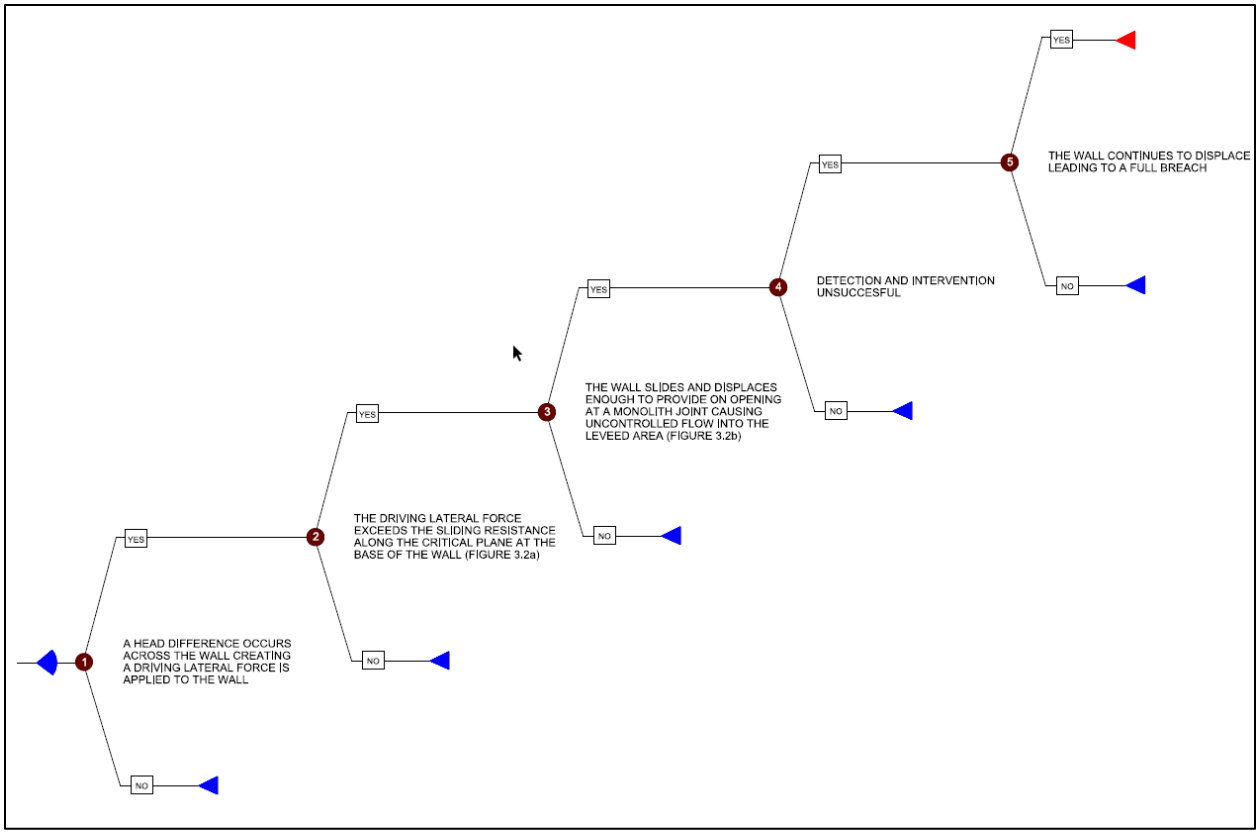

Figure 3.1. Example: Failure Mode Event Tree (Sliding)

3.3.3. Potential Failure Mode Analysis.

3.3.3.1. A Potential Failure Mode Analysis (PFMA) is an examination of potential failure modes by a team of persons who are qualified by experience or education. It is intended to identify potential failure modes and provide an enhanced understanding and insight on the risk exposure associated with the project. A PFMA will be performed as part of the design process for all projects. It is included in all risk assessments. Like risk assessment, the level of the PFMA can be scaled to the project.

3.3.3.2. All PFMs must be addressed in the design. Appropriate load cases, analyses, checks, or project features should be included as part of the design to address them. Some PFMs may not be directly addressed by design calculations. Examples of PFMs that may not be addressed by standard design criteria could include but are not limited to overload, miss-operation, corrosion, fatigue, material deficiencies, or scour and erosion. As the design develops, the design should be reviewed to assure that all PFMs are being addressed.

3.3.4. Typical Failure Modes. Breach of a dam or levee occurs in different ways depending on the nature of the potential failure mode. A wall-related failure mode generally is related to some instability, either external or internal to the wall itself, causing failure. A structural stability failure typically causes some displacement associated with sliding, rotating, loss of bearing, or undermining of the wall.

3.3.5. Contributing factors commonly associated with a wall instability include overtopping erosion, wave over splash erosion, erosion along the toe of the wall, corrosion, material deficiencies, overload, increased uplift, heave, seepage and piping, low soil strength, or waterside gap formation. An example of overtopping erosion contributing to a wall failure is shown in Figure 3.2.



Figure 3.2. Example: Wall Failure Scour and Erosion leading to the Failure of the I-Wall on the IHNC in New Orleans, LA during Hurricane Katrina (2005)

3.3.6. General Potential Failure Mode Descriptions.

3.3.6.1. Failure mode descriptions contain a description of the load, failure mechanism, and consequences that are specific to a site. The descriptions generally follow the nodes of an event tree. General PFM descriptions are provided in this manual organized by the wall system types introduced in Chapter 2. Emphasis is placed on the failure mechanism rather than the loading. There are many possible combinations of loads, failure mechanisms, and consequences. Loads vary by type, location, duration, and probability of occurrence as described in Chapter 6.

3.3.6.2. The general PFM descriptions in this manual demonstrate the failure path from initiation of load to failure of the wall. Also included with the general failure modes are some aspects of design performance that are not failure modes themselves but can contribute to the PFMs. This manual includes analysis and design guidance for the contributing performance aspects that are listed.

3.3.6.3. The general PFMs in this manual are provided as a guide and do not present an all-inclusive list. They are intended to describe the general failure modes that are addressed by the guidance in this manual. For a project, specifics of critical loadings and details of failure mechanisms should be developed and included as part of each PFM description.

3.3.6.4. Design for the specific loadings, failure mechanisms and analyses related to each of the general PFMs is provided throughout this manual. Chapter 4 provides a description of basic design requirements. Chapter 5 describes site characterization. Chapter 6 describes loads. Chapters 7 through 11 describe analysis and design of performance modes related to the failure modes for each wall system covered here. Chapter 12 provides additional information on design and provides requirements for the wall to earthen levee embankment transition failure modes.

3.4. General PFMs for Concrete Walls with a Shallow Foundation (SF).

3.4.1. PFM SF-1, Sliding. Progression to failure is described in Table 3.1.

Table 3.1
Failure Mode Progression for PFM SF-1

Step	Event
1	A head difference occurs across the wall creating a driving lateral force to the wall.
2	The driving lateral force exceeds the sliding resistance along the critical plane at the base of the wall (Figure 3.3a).
3	The wall slides and displaces enough to provide on opening at a monolith joint causing uncontrolled flow into the leveed area (Figure 3.3b).
4	Detection and intervention are unsuccessful.
5	The wall continues to displace leading to a full breach.

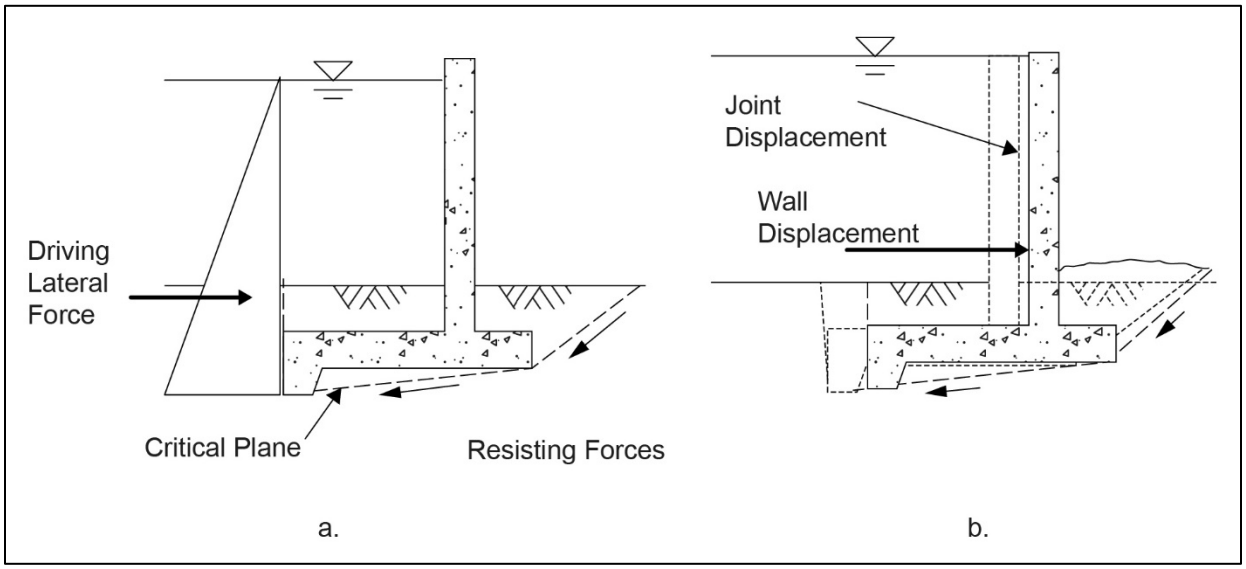

Figure 3.3. Sliding Failure Mode for a Concrete Walls with a SF

3.4.2. PFM SF-2, Resultant Location (Overturning). Progression to failure is described in Table 3.2.

Table 3.2
Failure Mode Progression for PFM SF-2

Step	Event
1	A head difference occurs across the wall creating a driving lateral force applied to the wall (Figure 3.4a).
2	The driving lateral force exerts an overturning moment about the base of the wall that moved the resultant force toward the toe (Figure 3.4a).
3	The driving forces increase and exceeds the resisting overturning moment created by the weight of the structure and associated soil pressure.
4	The wall starts to overturn when the heel lifts off the foundation as the resultant of vertical forces moves toward the edge of the footing (Figure 3.4b).
5	Water enters the gap under the footing and the uplift pressure at the base of the footing increases the overturning moment.
6	Detection and intervention are unsuccessful.
7	The wall continues to completely overturn when the resultant moves outside the footing leading to a full breach.

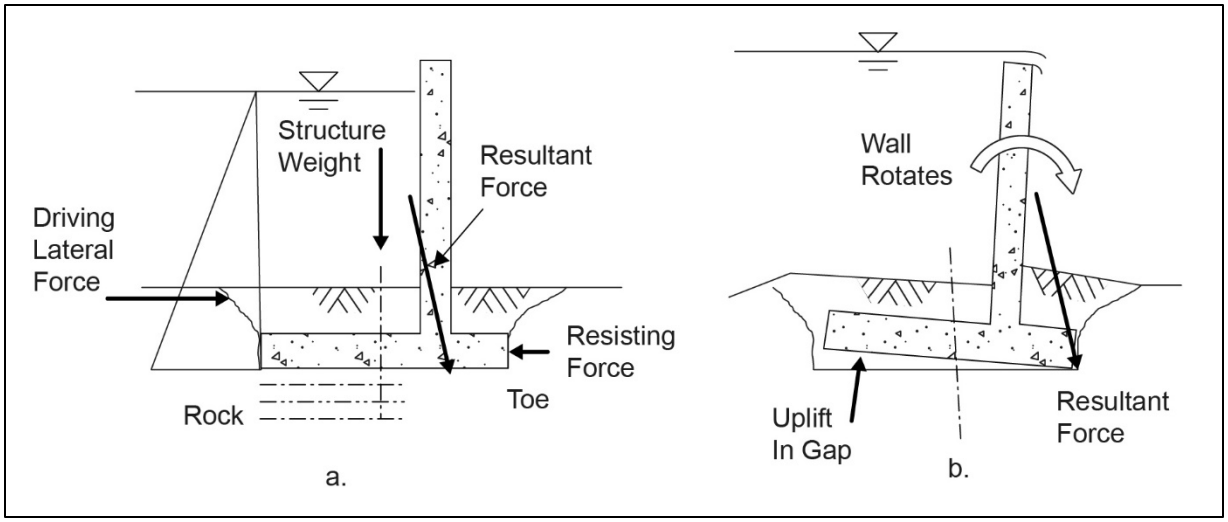

Figure 3.4. Resultant Location Failure Mode for a Concrete Wall with a SF

3.4.3. PFM SF-3, Bearing. Progression to failure is described in Table 3.3.

Table 3.3
Failure Mode Progression for PFM SF-3

Step	Event
1	A head difference occurs across the wall creating a driving lateral force applied to the wall.
2	The applied forces cause the location of the resultant of vertical forces on the wall base to move toward the toe of the wall (Figure 3.4a).
3	The movement of the resultant increases soil contact pressure at the toe of the wall. In addition, the lateral forces on the wall incline the resultant.
4	The base pressures and inclination increase until the applied load exceeds the bearing capacity of the foundation materials.
5	The wall tilts, settles, and increases the compressive load on the remaining portion of the wall in contact with soil, leading to further bearing capacity failure.
6	Detection and intervention are unsuccessful.
7	The wall displaces and rotates as shown (Figure 3.5). This results in lowering of the top of wall and openings of wall joints leading to a full breach.

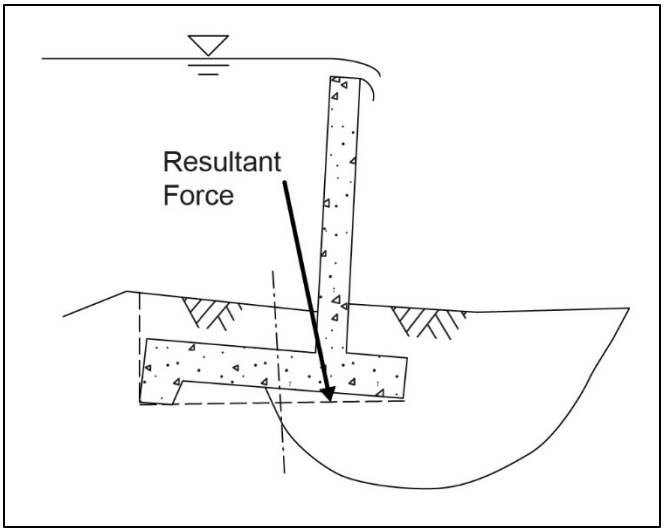

Figure 3.5. Bearing Capacity Failure Mode for a Concrete Walls with a SF

3.4.4. PFM SF-4, Global Stability. Progression to failure is described in Table 3.4. This failure mode is illustrated in Figure 3.6.

Table 3.4
Failure Mode Progression for PFM SF-4

Step	Event
1	A head difference occurs across the wall creating a driving lateral force applied to the wall.
2	The water load also results in a vertical force on the waterside of the wall, increasing driving forces acting on a sliding mass of soil that includes the wall.
3	As the load increases, the acting shear stress in the soil mass begins to exceed the shear strength of the soil.
4	Driving forces increase until the shear stresses exceed the shear strength along a continuous slip surface.
5	Detection and intervention are unsuccessful.
6	The soil mass deforms to the point that water overtops the height of the wall, leading to additional scour and complete wall breach.

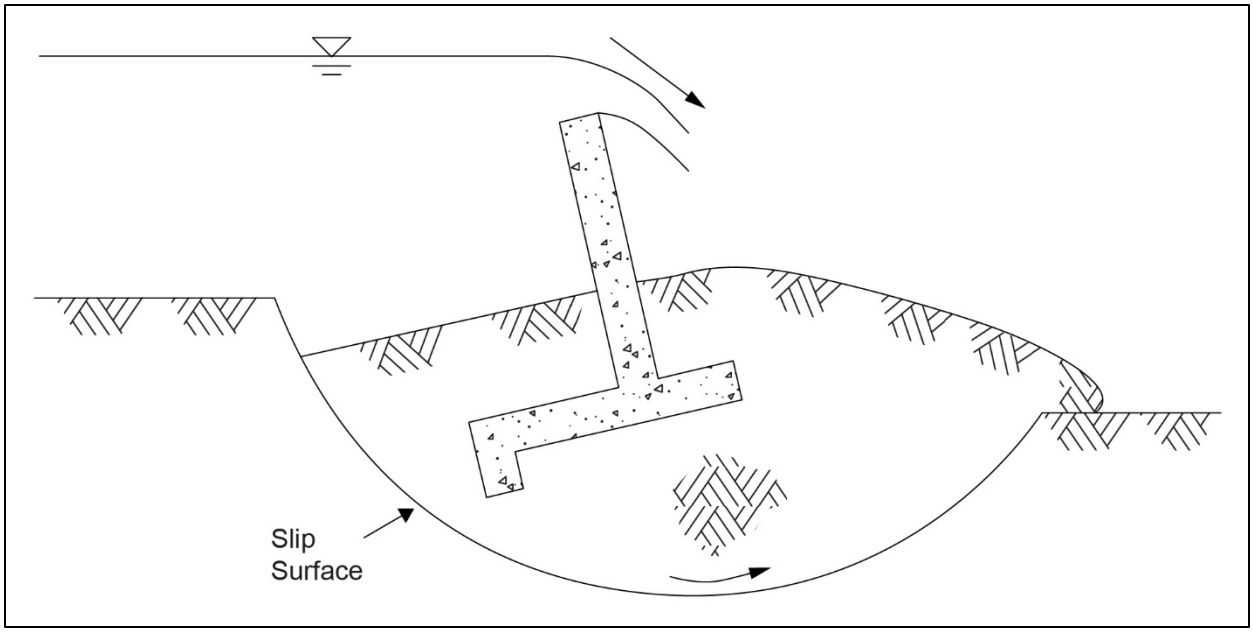

Figure 3.6. Global Slope Failure Mode for Concrete Walls with a SF

3.4.5. PFM SF-5, Internal Erosion (foundation seepage and piping undermining footing). Progression to failure is described in Table 3.5.

Table 3.5
Failure Mode Progression for PFM SF-5

Step	Event
1	A head difference occurs across the wall resulting in seepage through the foundation sufficient to heave soil at the landside ground surface (Figure 3.7 Step 1).
2	A layer of pipeable soil exists underneath the wall.
3	The exit at the landside ground surface is unfiltered.
4	A continuous stable roof is formed by the base of the shallow foundation, or there are sufficient fines in the waterside or landside soils along the erosion pathway, outside the foundation footprint, that can support a roof (Figure 3.7 Step 2).
5	Material in the foundation fails to clog the pipe.
6	Horizontal flow and gradient are sufficient to continuously transport eroded soil particles to the exit and advance the pipe (black arrows) to the waterside (Figure 3.7 Step 3).
7	Detection and intervention are unsuccessful.
8	The pipe enlarges (Figure 3.7 Step 4) and the wall collapses (Figure 3.7 Step 5) leading to breach due to uncontrolled flow over the collapsed wall.

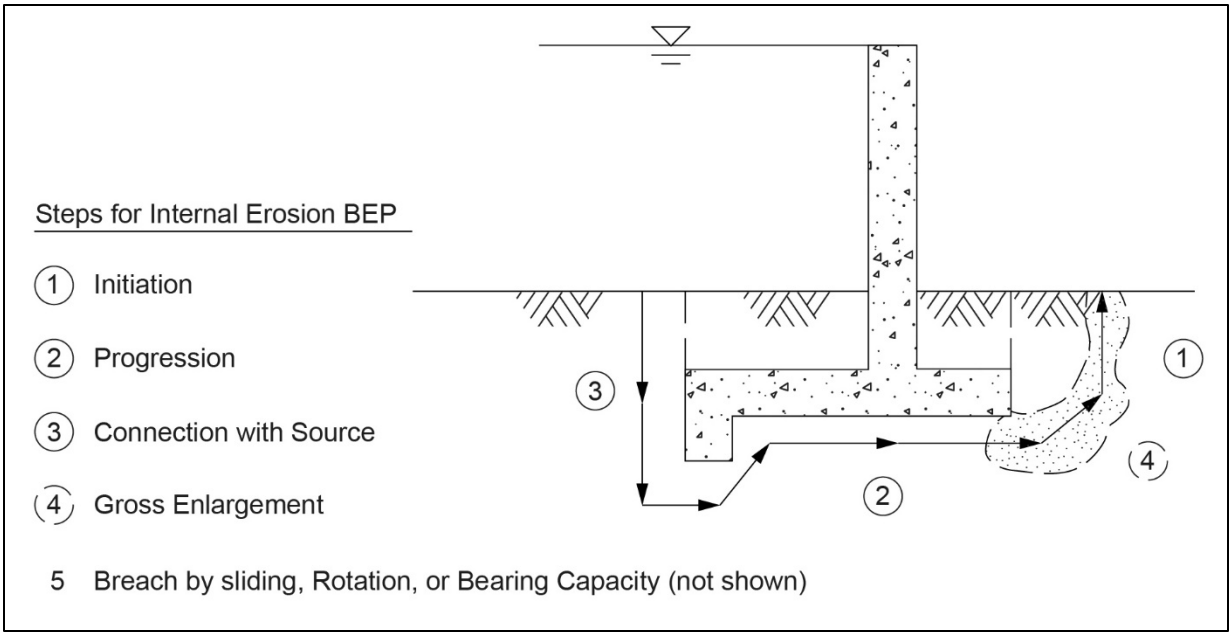

Figure 3.7. Internal Erosion Failure Mode for a Concrete Wall with a SF

3.4.6. PFM SF-6, Strength of Structural Elements. Progression to failure is described in Table 3.6.

Table 3.6
Failure Mode Progression for PFM SF-6

Step	Event
1	A driving lateral force is applied to the wall creating internal moment and shear forces in each of the wall members (stem, base, or connection). This is illustrated for a wall stem in Figure 3.8a.
2	As the loading increases, the internal moment or shear force increases and the critical section cracks (Figure 3.8a).
3	The reinforcement yields causing excessive displacement.
4	As the section continues to displace and the concrete crushes leading to a collapse of the section (Figure 3.8a). Alternately, reinforcement at the footing or a lift line has inadequate embedment and the wall begins to displace.
5	As the wall continues to displace the reinforcement pulls out leading to collapse of the section.
6	Detection and intervention are unsuccessful.
7	The failure of the section causes uncontrolled flow into the leveed area.

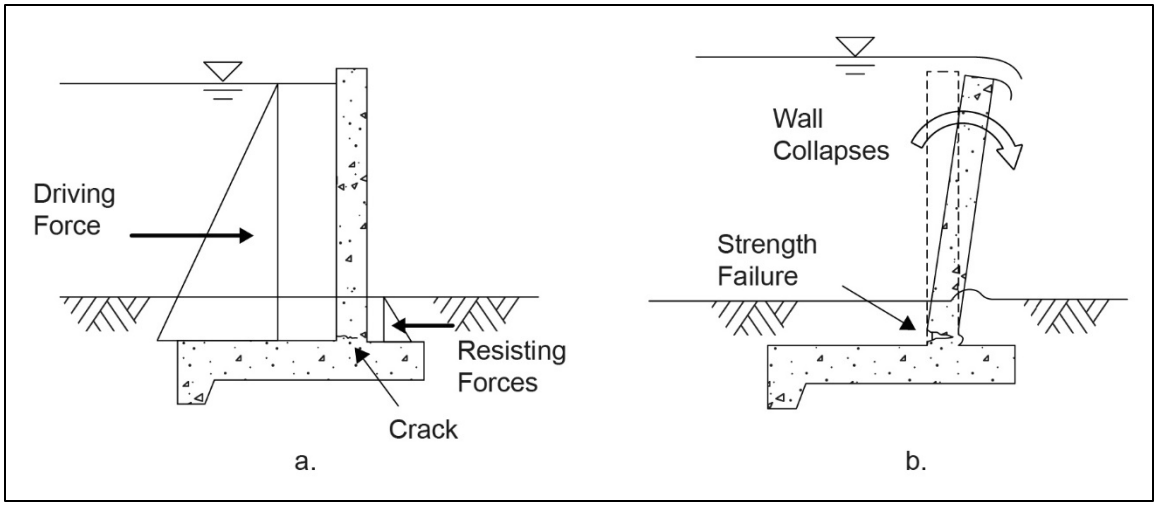

Figure 3.8. Strength Failure of Wall Stem

3.4.7. Performance Factors Contributing to PFMs. Some aspects of wall performance are not direct failure modes but can contribute to other failure modes. Settlement, scour and erosion, seismic performance, liquefaction, and cyclic softening are covered here.

3.4.7.1. Settlement. Settlement of concrete walls supported by shallow foundation can be a contributing factor to overtopping due to a lower top of floodwall elevation. It can also contribute to loss of resisting side soil due to joint and waterstop damage from differential settlement. This could contribute to sliding failure (PFM SF-1), resultant location failure (PFM SF-2), bearing failure (PFM SF-3), global stability failure (PFM SF-4), and strength failure of structural elements (PFM SF-5).

3.4.7.2. Scour and Erosion. Scour and erosion may affect wall performance either from overtopping of the wall (SE-1) or from stream or wave erosion at the base of the wall (SE-2) on either the wet side of walls that retain water or the resisting side of walls that retain soil.

3.4.7.2.1. For SE-1, under a flood event a wall is subjected to hydrostatic and wave elevations that exceed the top of the wall. The plunging water from water and/or wave overtopping has sufficient energy to initiate erosion.

3.4.7.2.2. For SE-2, the soil at the base of a wall is subject to loadings due to stream velocity and/or wind wave action that produce hydraulic shear stresses acting on the soil that supports the wall. For either mode, erosion progresses removing soil and increasing loads on the wall. Seepage paths are shortened, leading to increased seepage gradients. The erosion may connect water to otherwise isolated pervious zones. The duration of the event and erodibility of the soil allow sufficient loss of soil to lead to sliding failure (PFM SF-1), resultant location failure (PFM SF-2), bearing failure (PFM SF-3), global stability failure (PFM SF-4), or by internal erosion (PFM SF-5).

3.4.7.3. Seismic Performance, Liquefaction, and Cyclic Softening.

3.4.7.3.1. For this aspect of performance, an earthquake event occurs that produces a ground motion where the cyclic stress ratio (CSR) exceeds the cyclic resistance ratio (CRR). Liquefaction or cyclic softening is triggered in the zone of influence below the shallow foundation or foundation of the embankment in which the structure is embedded. Liquefaction that is triggered in sand-like soil results in densification, generation of excess pore pressures, and reduction in available shear strength. Cyclic softening is triggered in saturated clay-like materials when the CSR exceeds the CRR and results in a reduction in available shear strength.

3.4.7.3.2. Loss of shear strength results in reduced resisting forces along potential failure planes and can lead to sliding failure (PFM SF-1), bearing capacity failure (PFM SF-3), or global stability failure (PFM SF-4). Figure 3.9 shows the progression of lateral movement of a shallow-founded earth retaining wall in the form of sliding instability with inertial forces. The figure shows that during an earthquake if the acceleration of a ground motion exceeds a threshold (yield) acceleration of the system, which is greater than zero g, then permanent displacements are induced. Additionally, if the post-earthquake shear strength cannot resist static forces, then failure will occur.

3.4.7.3.3. Lateral spreading and flow failures can happen on a larger (global) scale as a result of reduced shear strength and earthquake ground motion. Lateral spreading occurs on gently sloping ground (less than about 6 percent) as a result of both inertial and static forces. During lateral spreading, non-liquefied soil at the surface breaks into blocks and shifts back and forth over a liquefied stratum. This results in progressive movement of the land mass toward a free face, such as a wall or channel. Flow failure occurs on steep ground when the post-earthquake shear strengths cannot resist the static shear stresses of the system and ultimately large-scale failure occurs.

3.4.7.3.4. Dynamic settlement resulting from densification could result in settlement performance issues. Breach from this failure mode would only be likely with dam walls or other walls associated with permanent water retention. Figure 3.10 shows the progression of dynamic settlement for a shallow-founded retaining wall.

3.4.7.3.5. A seismic event is extremely unlikely to concur concurrent to flood events for floodwalls. However, large, complex, and high-consequence projects, should consider risk in a post-seismic situation where the project may be vulnerable until repairs can be fully made.

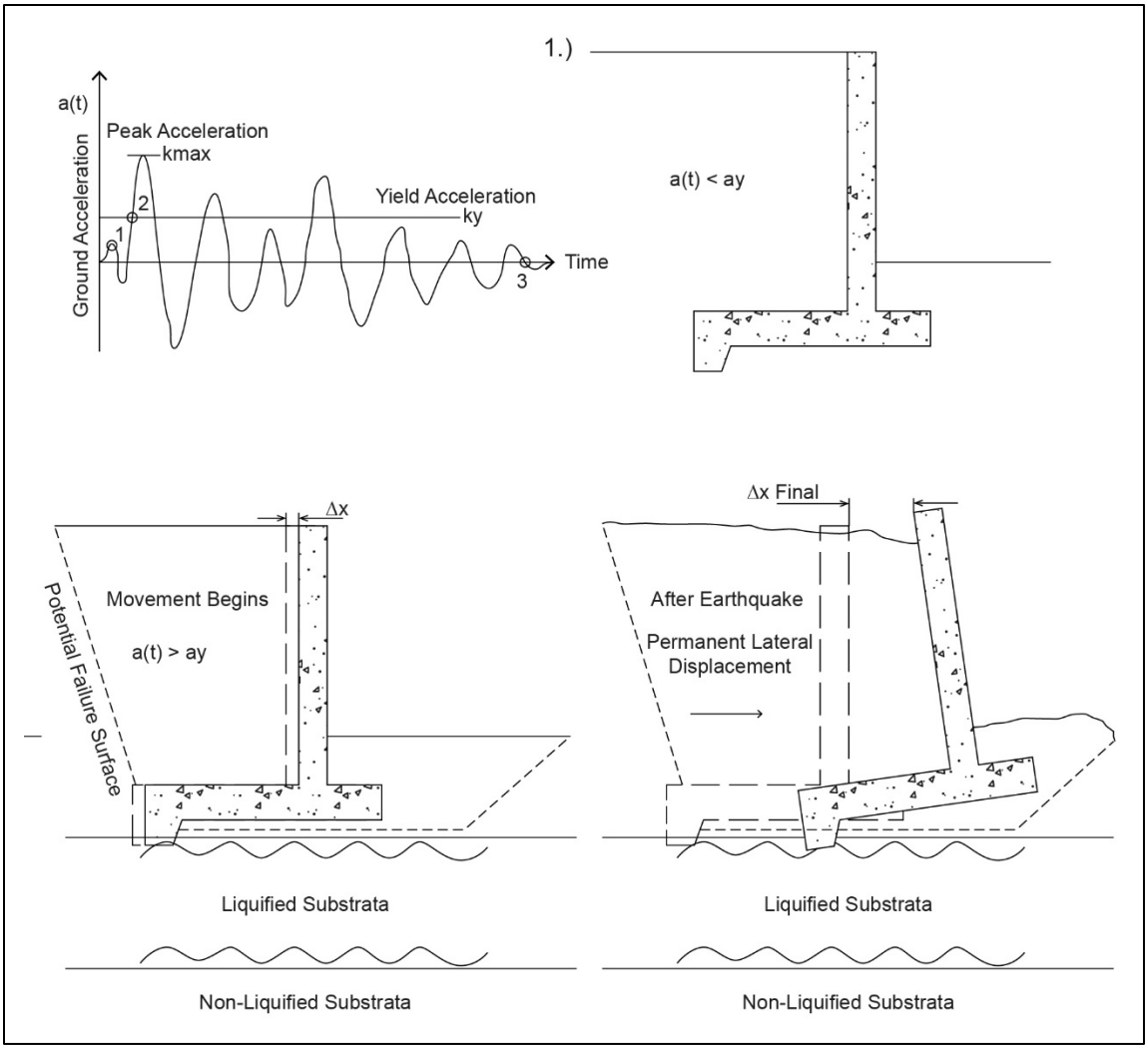

Figure 3.9. Progression of Lateral Movement Due to Sliding Instability

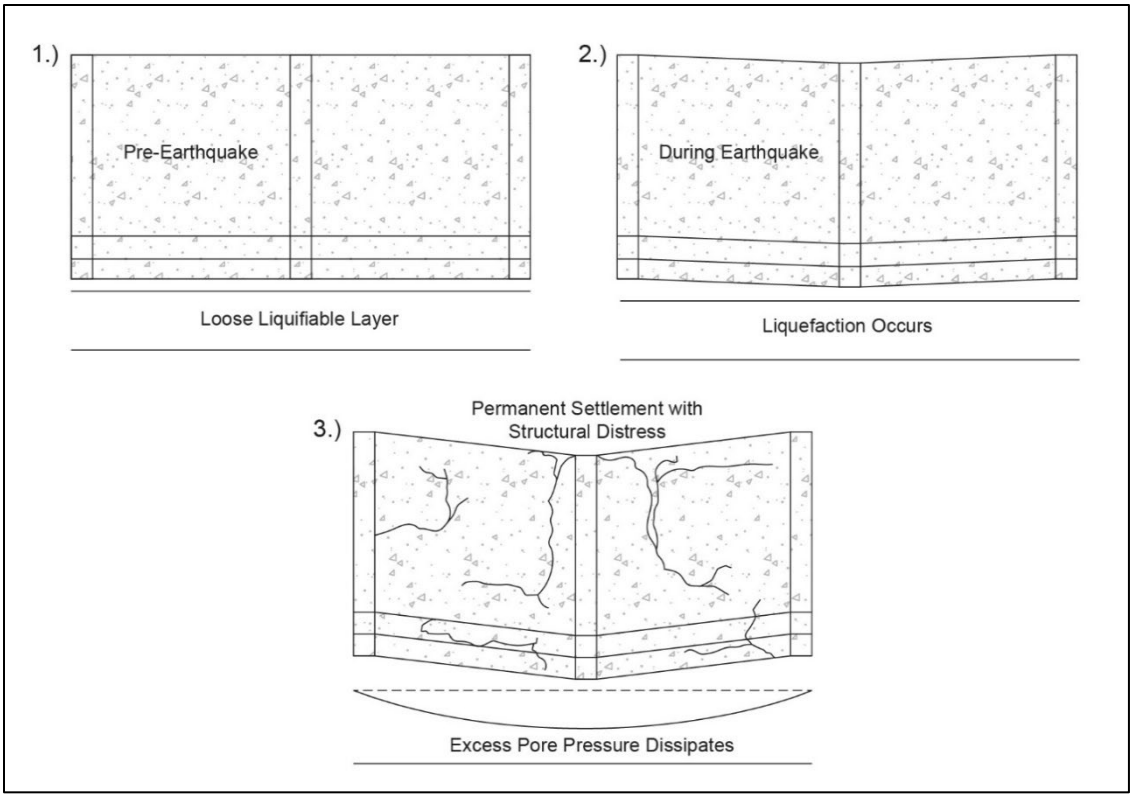

Figure 3.10. Progression of Dynamic Settlement

3.5. General PFMs for Concrete Walls Supported by a Deep Foundation (DF).

3.5.1. PFM DF-1, Bearing and Stability of Pile or Drilled Shaft.

3.5.1.1. PFM DF-1a, Axial Failure. Progression to failure is described in Table 3.7.

Table 3.7
Failure Mode Progression for PFM DF-1a

Step	Event
1	A head difference occurs across the wall creating a driving lateral force applied to the wall (Figure 3.11a).
2	As the load increases, the acting forces in the pile or drilled shaft approach the capacity of the soil or rock to resist them and deformations increase.
3	With increasing load, the axial capacity is exceeded, and the landside piles or shafts begin to plunge or the waterside piles pull out (Figure 3.11b).
4	Detection and intervention are unsuccessful.
5	Water is able to overtop the height of the wall, leading to additional scour, a further reduction in axial pile or shaft capacity, and complete wall breach.

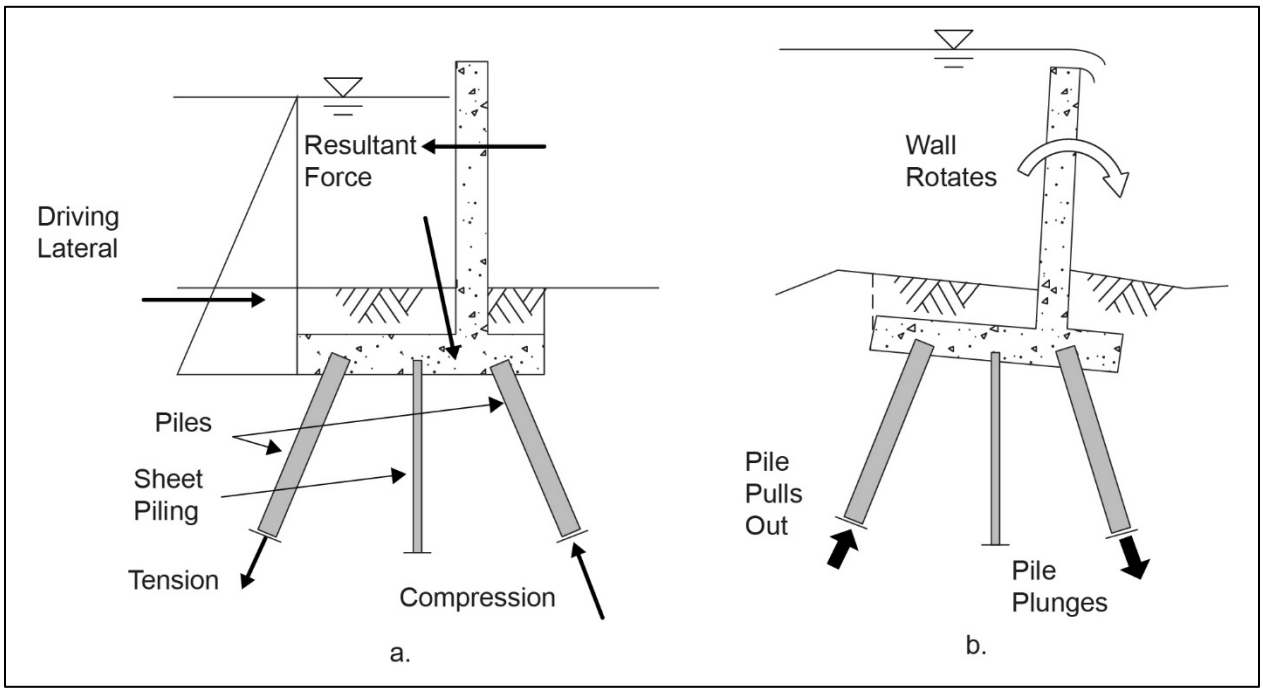

Figure 3.11. Axial Failure of a Deep Foundation Element

3.5.1.2. PFM DF-1b, Lateral Failure. Progression to failure is described in Table 3.8.

Table 3.8
Failure Mode Progression for PFM DF-1b

Step	Event
1	A head difference occurs across the wall creating a driving lateral force applied to the wall (Figure 3.12a).
2	Water induces a surface pressure at the ground surface on the waterside of the base of the wall that induces additional lateral pressure acting on pile or shafts.
3	Lateral force is resisted by earth pressures on the piles.
4	As the load increases, lateral deflections of the wall increase (Figure 3.12b).
5	Due to variability of soil along the length of wall, monoliths displace unequal amounts, resulting in a gap between monoliths where uncontrolled flow can occur.
6	Detection and intervention are unsuccessful.
7	The flow leads to additional scour, a further reduction in lateral pile capacity, and complete wall breach.

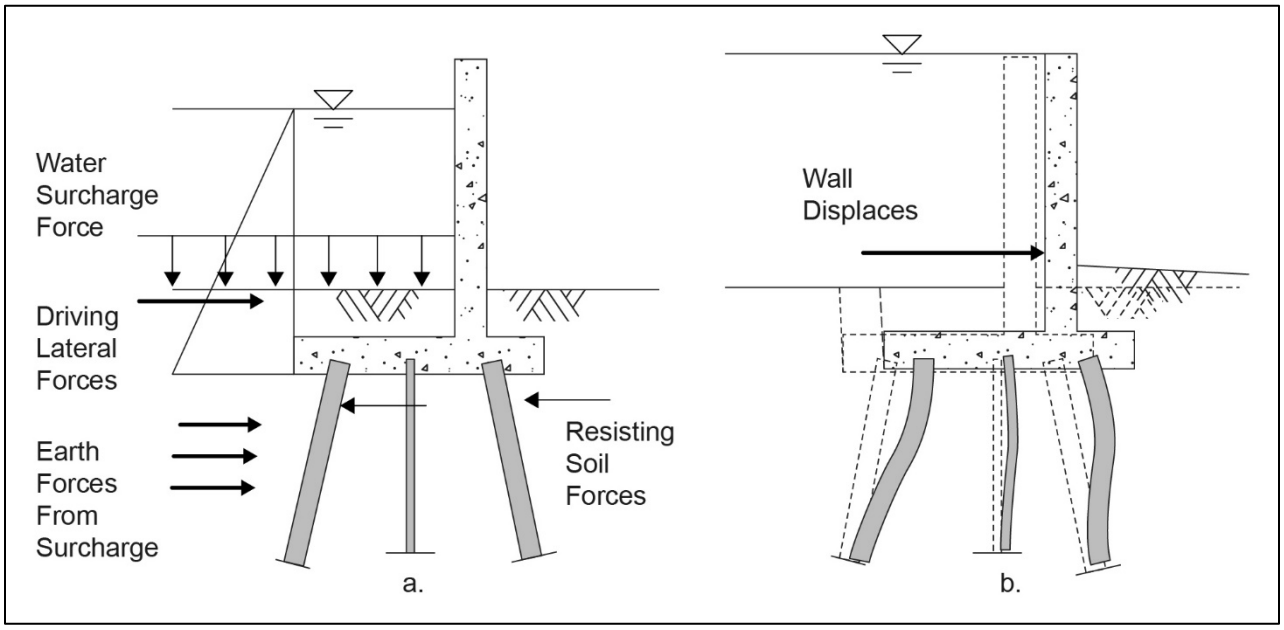

Figure 3.12. Lateral Failure of a Deep Foundation Element

3.5.2. PFM DF-2, Global Stability Failure. Progression to failure is described in Table 3.9.

Table 3.9
Failure Mode Progression for PFM DF-2

Step	Event
1	A head difference occurs across the wall creating a driving lateral force applied to the wall.
2	The water load also results in a vertical surcharge force on the waterside of the wall, increasing driving forces acting on a sliding mass of soil that includes the wall (Figure 3.13).
3	As the load increases, the acting shear stress in the soil mass begins to exceed the shear strength of the soil and strains increase.
4	The straining soil mass applies load to the piles and removes lateral support for loads applied directly to the wall that are carried by the piles.
5	Driving forces increase until the shear stresses in the soil exceed the shear strength extensively.
6	The lateral movements of the soil become sufficient to cause high bending moments and shears to be developed in the piles.
7	Continued driving forces acting on the mass of soil overcome the resisting soil strength and pile capacity.
8	Detection and intervention are unsuccessful.
9	The wall and surrounding soil deform until water is able to overtop the height of the wall or flow through damaged joints, leading to additional scour, loss of resisting side soil, and complete wall breach.

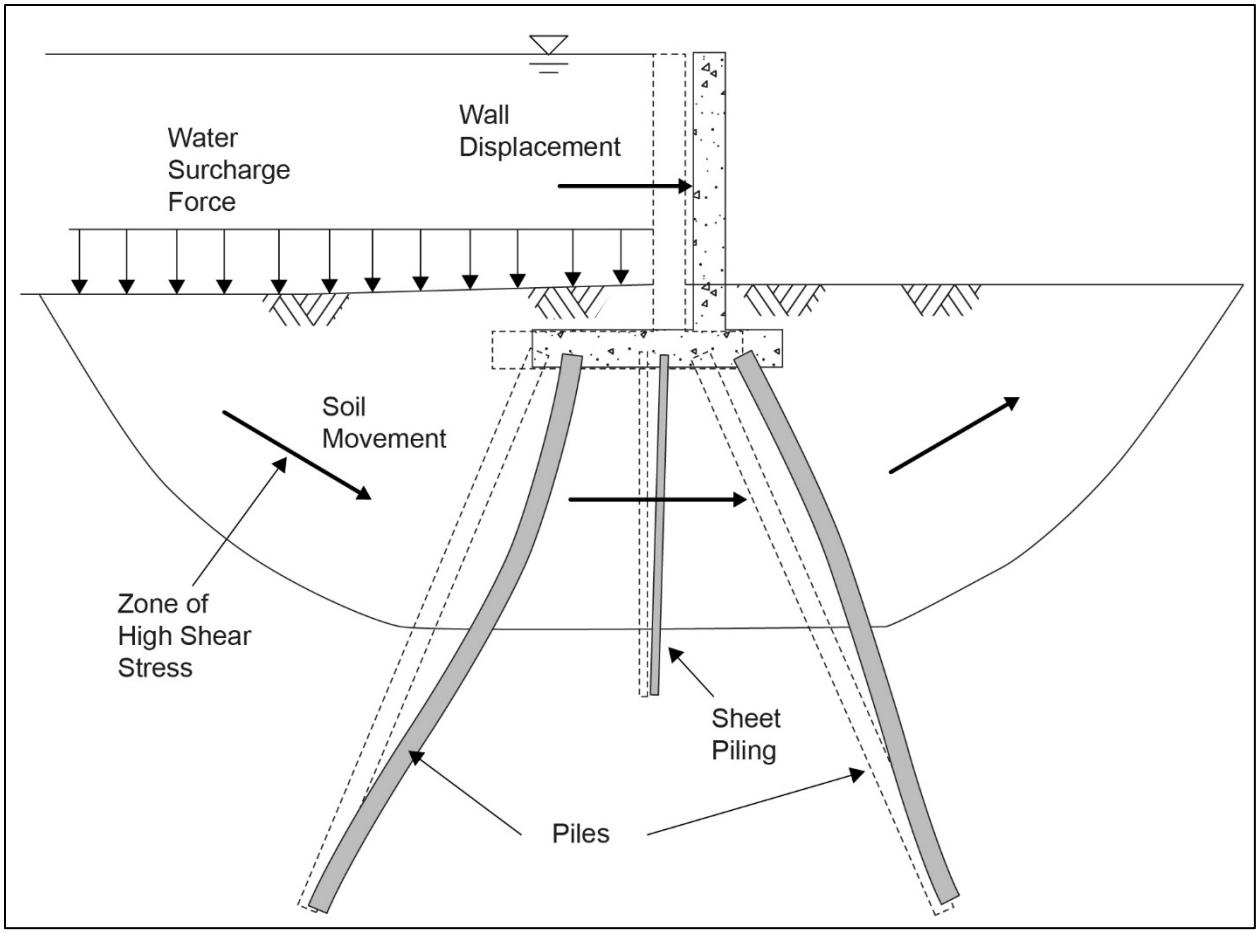

Figure 3.13. Global Stability Failure of a Wall with a Deep Foundation

3.5.3. PFM DF-3, Internal Erosion (foundation seepage and piping undermining wall). Progression to failure is described in Table 3.10. See Figure 3.7 for an illustration of this process under a wall with a shallow foundation. The process is the same for deep-founded walls, which must have a cutoff due to the likely settlement of soil between load-carrying piles as described in section 8.5.

Table 3.10
Failure Mode Progression for PFM DF-3

Step	Event
1	A head difference occurs across the wall resulting in seepage through the foundation sufficient to heave soil at the landside ground surface (Figure 3.7 Step 1).
2	A layer of pipeable soil exists underneath the wall.
3	The exit at the landside ground surface is unfiltered.
4	A continuous stable roof is formed by the base of the shallow foundation, or there are sufficient fines in the waterside or landside soils along the erosion pathway, outside the foundation footprint, that can support a roof (Figure 3.7 Step 2).
5	Material in the foundation fails to clog the pipe.
6	Horizontal flow and gradient are sufficient to continuously transport eroded soil particles to the exit and advance the pipe (black arrows) to the waterside (Figure 3.7 Step 3).
7	Detection and intervention are unsuccessful.
8	The pipe continues to enlarge (Figure 3.7 Step 4), allowing uncontrolled flow beneath the wall leading to consequences related to interior flooding or loss of pool.

3.5.4. PFM DF-4, Strength of Structural Elements.

3.5.4.1. PFM DF-4a, Internal Structural Failure of the Wall. See PFM SF-6.

3.5.4.2. PFM DF-4b, Pile Failure. Progression to failure is described in Table 3.11.

Table 3.11
Failure Mode Progression for PFM DF-4b

Step	Event
1	A driving lateral force is applied to the wall creating internal axial, moment, and shear forces in each of the foundation piles.
2	The internal axial, moment, or shear force increases and a critical section cracks (concrete pile or shaft) or yields (steel pile).
3	The strength of the pile may be degraded by section loss due to corrosion. As the pile sections yield, excessive displacement of the wall occurs.
4	The wall continues to displace the piles fracture leading to a pile failure.
5	Detection and intervention are unsuccessful.
6	The pile failure causes excessive monolith movement or an instability of the wall, which leads to a complete wall breach.

3.5.4.3. PFM DF-4c, Pile or Shaft Connection Failure. Progression to failure is described in Table 3.12.

Table 3.12
Failure Mode Progression for PFM DF-4c

Step	Event
1	A driving lateral force is applied to the wall that derives stability wholly, or in part, by pile tension connectors and the concrete in which they are embedded.
2	The driving lateral force causes tension, moment, and/or shear to increase in the pile connection resulting in a failure of the connector or a concrete pull-out failure.
3	Pile Connector failure:
a	The internal tension, moment, or shear force increases and a critical section yields (typically some type of steel anchor strap or bar welded to or embedded in the pile).
b	As the pile connections yield, excessive displacement of the wall occurs.
c	As the wall continues to displace the pile connection fractures.
d	Detection and intervention are not successful because of the difficulty in either.
e	The pile connection failure causes excessive monolith movement or an instability of the wall, which leads to a complete wall breach.
4	Pull-out failure:
a	The internal tension, moment, or shear force increases and a critical section in the concrete pile cap cracks.

Step	Event
b	The reinforcement across the crack yields causing excessive displacement.
c	As the section continues to displace, the reinforcement across the crack fractures, leading to a failure of the pile connection by pull-out.
d	Detection and intervention are not usually possible; therefore, detection and intervention are not successful.
e	The failure of the connection causes excessive monolith movement or an instability of the wall, which leads to a complete wall breach.

3.5.5. Performance Aspects Contributing to PFMs. Some aspects of wall performance are not direct failure modes but can contribute to other failure modes. Settlement, scour and erosion, seismic performance, liquefaction, and cyclic softening are covered here.

3.5.5.1. Settlement and Downdrag. Settlement of concrete walls with deep foundations occurs through downdrag settlement of the piles with insufficient bearing capacity below the zone of compressing soil. Settlement of floodwalls with deep foundations can be a contributing factor to failure through lowering of the top elevation of a floodwall and increasing the probability of overtopping, from damage to joints and waterstops of floodwalls, or by causing structural failure of the piles or drilled shafts. This could contribute to pile bearing failure (PFM DF-1), global stability failure (PFM DF-2), internal erosion failure by settlement under the base (PFM DF-3), and strength failure of structural elements (PFM DF-4).

3.5.5.2. Scour and Erosion. Scour and erosion may affect wall performance either from overtopping of the wall (SE-1) or from stream or wave erosion at the base of the wall (SE-2). SE-2 may occur on either the waterside of walls that retain water or the resisting side of walls that retain soil.

3.5.5.2.1. For SE-1, under a flood event a wall is subjected to hydrostatic and wave elevations that exceed the top of the wall. The plunging water from water and/or wave overtopping has sufficient energy to initiate erosion. For SE-2, the soil at the base of a wall is subject to loadings due to stream velocity and/or wind wave action that produce hydraulic shear stresses acting on the soil that supports the wall.

3.5.5.2.2. For either SE-1 or SE-2, erosion progresses removing soil and increasing loads on the wall. Seepage paths are shortened leading to increased seepage gradients. The erosion may connect water to otherwise isolated pervious zones. The duration of the event and erodibility of the soil allow sufficient loss of resisting forces and lead to failure by pile bearing or stability failure (PFM DF-1), global stability failure (PFM DF-2), internal erosion (PFM DF-3), or by strength failure of the piles (PFM DF-4).

3.5.5.3. Seismic Performance, Liquefaction, and Cyclic Softening.

3.5.5.3.1. For this aspect of performance, an earthquake event occurs that produces a ground motion where the CSR exceeds the CRR. In addition, liquefaction or cyclic softening is triggered along the length of the pile or below the pile tip. Liquefaction that is triggered in sand-like soil results in densification, generation of excess pore pressures, and reduction in available shear strength.

3.5.5.3.2. Cyclic softening is triggered in saturated clay-like materials when the CSR exceeds the CRR and results in a reduction in available shear strength.

3.5.5.3.3. The axial load on the pile exceeds the available resistance (reduced) along the shaft and pile tip and results in an axial pile failure (PFM DF-1a).

3.5.5.3.4. Loss of shear strength providing resistance to lateral forces around the pile results in deflections that cause a lateral pile failure (PFM DF-1b), internal structural failure (PFM DF-4), or pile connection failure (PFM DF-4).

3.5.5.3.5. A global stability failure (PFM DF-3) can result from reduced shear resistance along sliding surfaces. Dynamic settlement resulting from densification could result in settlement performance issues and pile downdrag.

3.6. General PFMs for Cantilever Pile Walls (CP).

3.6.1. PFM CP-1, Rotational Stability.

3.6.1.1. Progression to failure is described in Table 3.13.

Table 3.13
Failure Mode Progression for PFM CP-1

Step	Event
1	A head difference occurs across the wall creating a driving lateral force applied to the wall.
2	The wall rotates semi-rigidly about a point below the ground surface on the resisting side of the wall.
3	Soil on the leveed side of the wall resists rotation (Figure 3.14a).
4	As the load increases, full passive pressure develops near the ground surface on the resisting side of the wall.
5	The full passive pressure is the maximum amount of resisting soil pressure that can be developed.
6	As the load increases, the full passive pressure develops at progressively lower elevations on the wall and rotation continues.

Step	Event
7	Detection and intervention are unsuccessful. Sufficient rotation results in overtopping of the wall (Figure 3.14b).
8	Overtopping and progressive scour erode resisting soil on the protected side of the wall.
9	Sufficient erosion occurs to cause collapse of the wall.

3.6.1.2. A common companion loading mechanism is wave over splash as described in SE-1. Erosion from wave over splash can cause loss of passive soil resistance leading to reduced rotational capacity prior to overtopping.

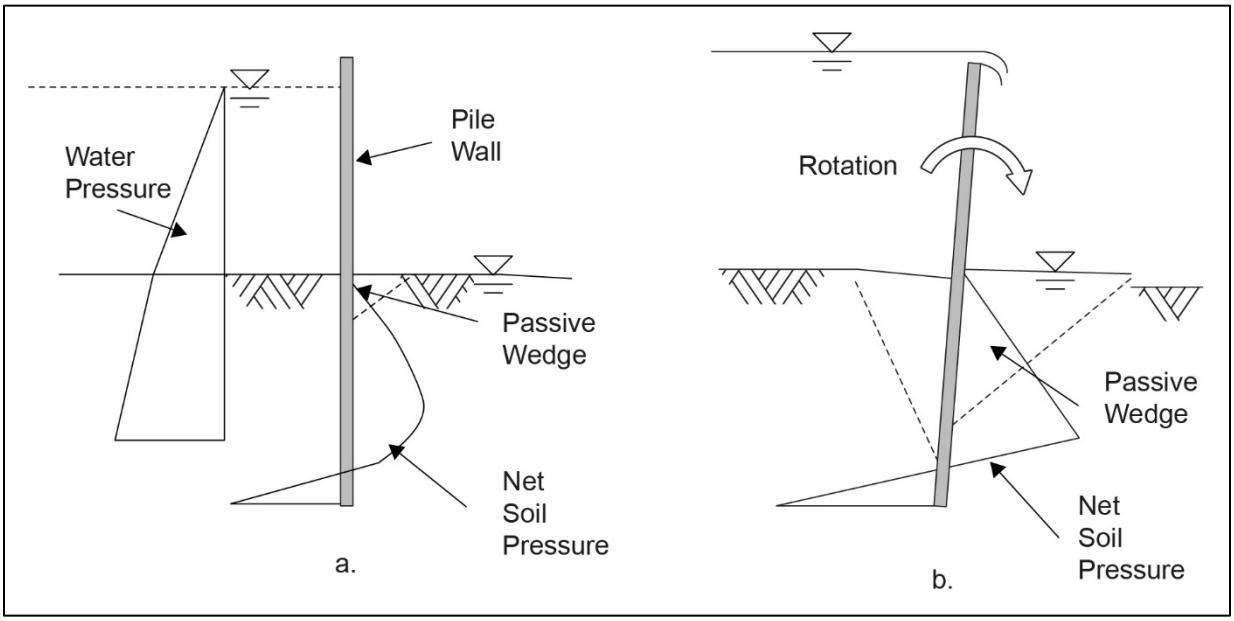

Figure 3.14. Rotational Failure Mode for a Cantilever Pile Wall

3.6.2. PFM CP-2, Global Stability.

3.6.2.1. Progression to failure is described in Table 3.14. This failure mode is illustrated in Figure 3.15.

Table 3.14
Failure Mode Progression for PFM CP-2

Step	Event
1	A head difference occurs across the wall creating a driving lateral force applied to the wall.
2	The water load also results in a vertical force on the waterside of the wall, increasing driving forces acting on a rotating and/or sliding mass of soil that includes the wall.
3	As the load increases, the acting shear stress in the soil mass begins to exceed the shear strength of the soil.
4	Driving forces increase until the shear stresses exceed the shear strength along a continuous sliding plane.
5	Detection and intervention are unsuccessful.
6	The wall and surrounding soil rotate and/or slide until water is able to overtop the height of the wall, leading to additional scour and complete wall breach.

3.6.2.2. Contributing factors to this failure mode are permeable layers under the wall that allow increased poor water pressures on the resisting side of the wall and a waterside gap may develop during loading due to wall deformations. The gap may allow direct connection to these permeable layers, if present, or become water filled from waterside water and result in hydrostatic pressures on the wall. The additional hydrostatic pressure will increase the lateral forces on the wall.

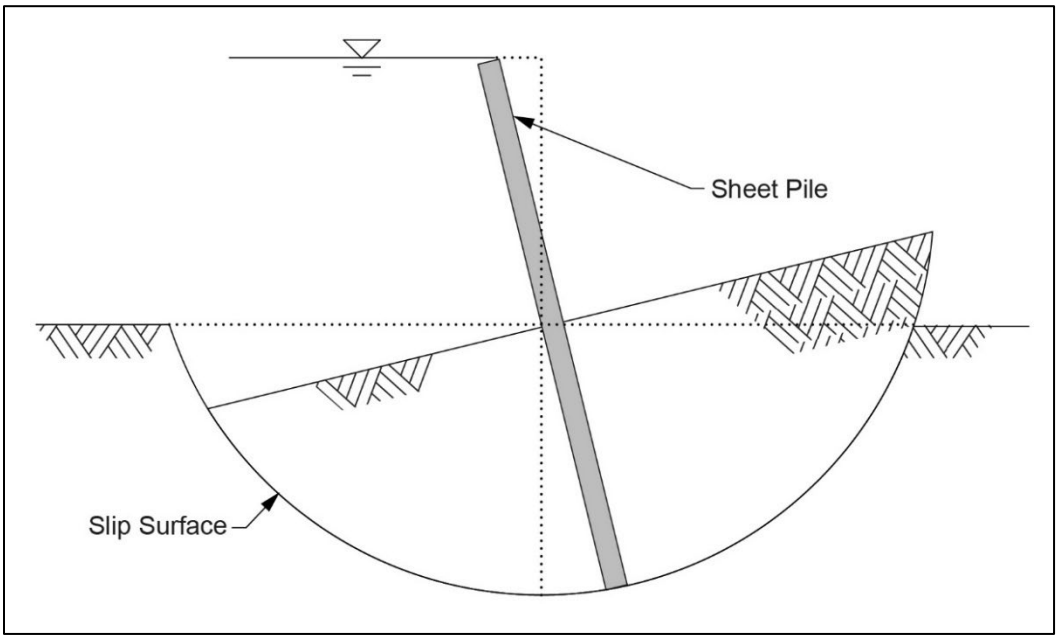

Figure 3.15. Global Stability Failure Mode for a Cantilever Pile Wall

3.6.3. PFM CP-3, Internal Erosion (foundation seepage and piping undermining wall). Progression to failure is described in Table 3.15.

Table 3.15
Failure Mode Progression for PFM CP-3

Step	Event
1	A head difference occurs across the wall resulting in seepage through the foundation sufficient to heave soil at the landside ground surface (Figure 3.7 Step 1).
2	A layer of pipeable soil exists underneath the wall.
3	The exit at the landside ground surface is unfiltered.
4	There are sufficient fines in the waterside or landside soils along the erosion pathway that can support a roof (Figure 3.7 Step 2).
5	Material in the foundation fails to clog the pipe.
6	Horizontal flow and gradient are sufficient to continuously transport eroded soil particles to the exit and advance the pipe (black arrows) to the waterside (Figure 3.7 Step 3).
7	Detection and intervention are unsuccessful.
8	The pipe enlarges (Figure 3.16 Step 4), the wall deflects, either by rotation or by global stability (Figure 3.16 Step 5).
9	The wall overtops or the interlocks become separated, leading to scour and erosion of soil on the resisting side of the wall and breach.

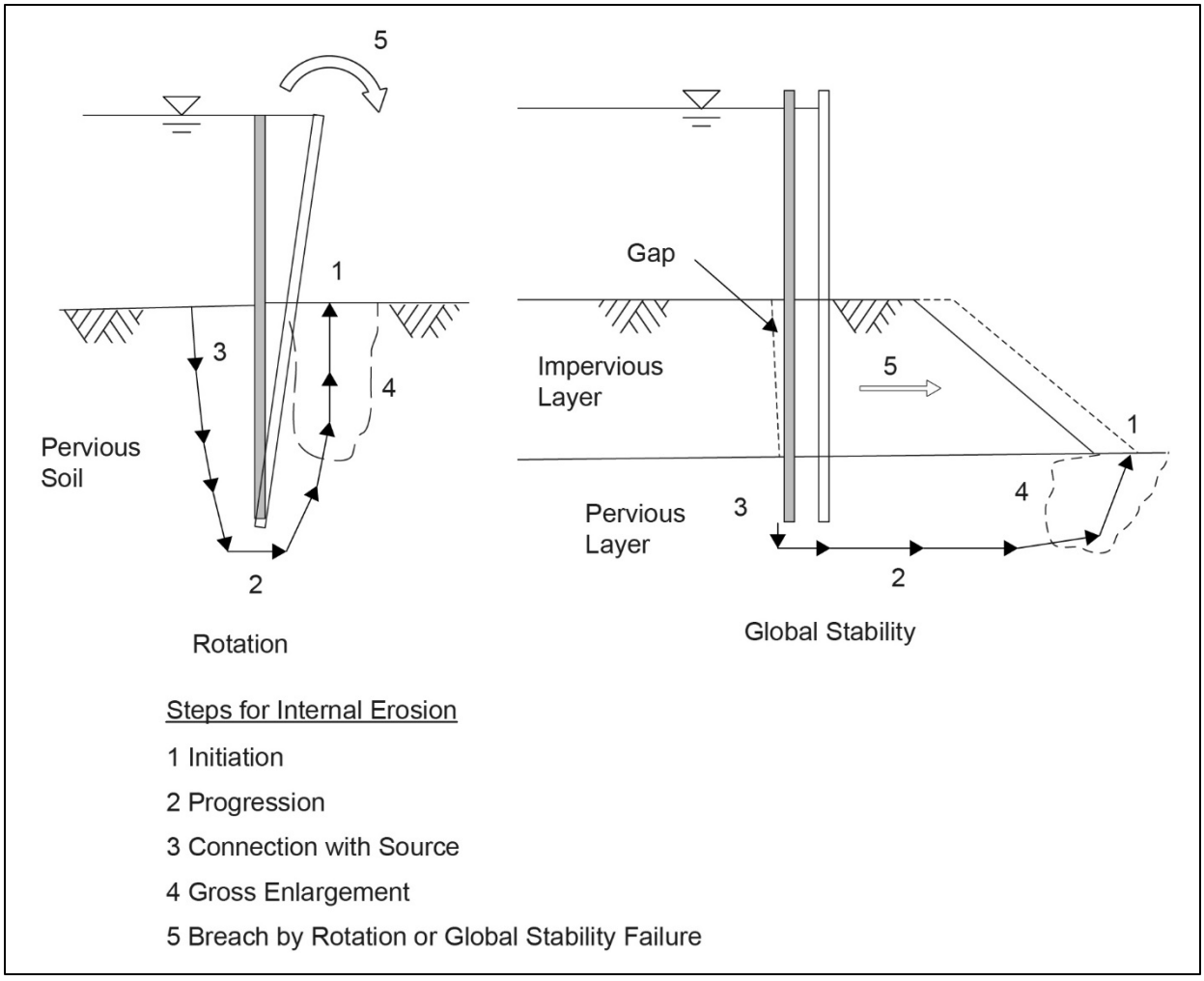

Figure 3.16. Internal Erosion Failure Mode for a Cantilever Pile Wall

3.6.4. PFM CP-4, Strength of Structural Elements (flexural failure of pile, concrete cap, or connections). Progression to failure is described in Table 3.16

Table 3.16
Failure Mode Progression for PFM CP-4

Step	Event
1	The river or pool rises, increasing the differential load on the floodwall.
2	As the water rises, the pile or reinforcement becomes overstressed and begins to yield. In the case of an inadequate concrete to sheet pile connection, the concrete cracks at the top of the sheet pile on the resisting side of the pile.
3	Because the bending failure is below ground or the cracking of the sheet pile to concrete cap is internal, observers fail to realize what is happening until the top of the floodwall begins to visibly rotate toward the protected side.
4	As the wall continues to rotate landward, the waterstops between the failing monolith and the two adjacent monoliths fail, leading to visible leakage at the joints.
5	As the wall continues to rotate toward the protected side, the rising water on the pool or river side begins to flow over the top of the lowered top of wall surface.
6	Without early detection, intervention efforts are unsuccessful.
7	The top of the wall collapses towards the protected side, leading to a breach with uncontrolled flow over the remaining portion of the cantilever wall monolith.

3.6.5. Performance Aspects Contributing to PFMs. Some aspects of wall performance are not direct failure modes but can contribute to other failure modes. Settlement, scour and erosion, seismic performance, liquefaction, and cyclic softening are covered here.

3.6.5.1. Settlement. Settlement of cantilever pile walls can be a contributing factor to scour from overtopping due to a lower top of floodwall elevation, or from scour caused by joint and waterstop damage due to differential settlement. This could contribute to rotational failure (PFM CP-1), global stability failure (PFM CP-2), or strength failure of structural elements (PFM CP-4).

3.6.5.2. Scour and Erosion. Scour and erosion may affect wall performance either from overtopping of the wall (SE-1) or from stream or wave erosion at the base of the wall (SE-2) on either the wet side of walls that retain water or the resisting side of walls that retain soil.

3.6.5.2.1. For SE-1, under a flood event a wall is subjected to hydrostatic and wave elevations that exceed the top of the wall. The plunging water from water and/or wave overtopping has sufficient energy to initiate erosion. For SE-2, the soil at the base of a wall is subject to loadings due to stream velocity and/or wind wave action that produce hydraulic shear stresses acting on the soil that supports the wall.

3.6.5.2.2. For either SE-1 or SE-2, erosion progresses removing soil and increasing loads on the wall. Seepage paths are shortened, leading to increased seepage gradients. The erosion may connect water to otherwise isolated pervious zones. The duration of the event and erodibility of the soil allow sufficient loss of resisting forces and lead to failure by rotational stability failure (PFM CP-1) as shown in Figure 3.17, global stability failure (PFM CP-2), internal erosion (PFM CP-3), or by strength failure of the piles (PFM-CP-4).

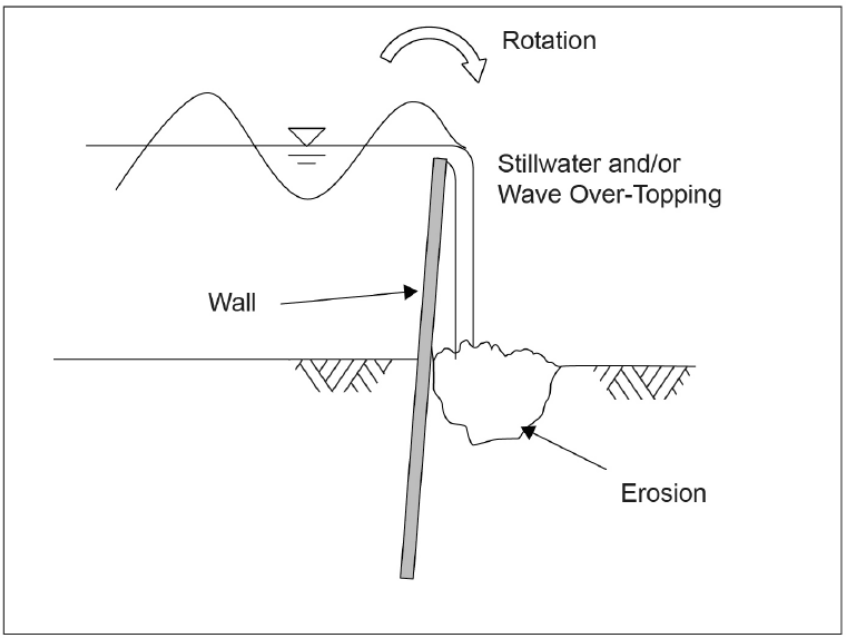

Figure 3.17. Overtopping Scour and Erosion of a Cantilever Pile Wall

3.6.5.3. Seismic Performance, Liquefaction, and Cyclic Softening.

3.6.5.3.1. For this aspect of performance, an earthquake event occurs that produces a ground motion where the CSR exceeds the cyclic resistance ratio CRR. In addition, liquefaction or cyclic softening is triggered behind the wall (retained side), in front of the wall (below dredge line along pile), or below the pile tip.

3.6.5.3.2. Liquefaction that is triggered in sand-like soil results in densification, generation of excess pore pressures, and reduction in available shear strength. Cyclic softening is triggered in saturated clay-like materials when the CSR exceeds the CRR and results in a reduction in available shear strength.

3.6.5.3.3. Reduction in shear strength behind the wall results in an increased lateral load to the back of the wall and leads to an internal structural failure (PFM CP-4), rotational failure of the wall (PFM CP-1), or global stability failure (PFM CP-2). Likewise, reduction in strength in front of the wall results in a decreased passive resistance and leads to an internal structural failure (PFM CP-1), rotational failure of the wall (PFM CP-1), or global stability failure (PFM CP-2).

3.6.5.3.4. Reduction in shear strength below the pile tip results in a decreased resistance along sliding surfaces and results in rotational global stability failure (PFM CP-2).

3.6.5.3.5. Dynamic settlement along the length of the pile or below the pile that occurs from densification could result in settlement caused issues noted previously.

3.7. General PFMs for Anchored Pile Walls.

3.7.1. Anchored pile walls (AP) are typically earth retaining walls. Generally, anchored walls are stabilized by the rise of pool or river stage thus increasing the factor of safety during a flood event. The failure modes are then driven by the retained soil lateral forces against the sheet pile wall. Therefore, failure would occur under normal pool or low river stage (sunny day) conditions or a rapid drawdown of an antecedent flood event.

3.7.2. A breach could potentially occur if there is insufficient time prior to a flood event to repair a wall that retains fill that is part of a line of protection. But most uses of this wall type are not for structures that retain water and consequences are more likely to be loss of service of the facility that is retained by the wall. Performance failure modes are similar for passive single anchor pile walls and post-tensioned tieback walls.

3.7.3. PFM AP-1, Failure Due to Inadequate Pile Penetration. All anchor walls will be subjected to lateral earth loads. Anchor walls that have inclined anchors or have gravity loads associated with the wall system components will also be subjected to vertical loads. Insufficient embedment of the wall elements can lead to failure due to exceedance in lateral capacity and axial capacity.

3.7.3.1. PFM AP-1a, Rotational Failure Due to Inadequate Pile Penetration. Progression to failure is described in Table 3.17. This failure mode is illustrated in Figure 3.18.

3.7.3.2. PFM AP-1b, Axial Capacity Failure Due to Inadequate Pile Penetration. Progression to failure is described in Table 3.18.

Table 3.17
Failure Mode Progression for PFM AP-1a

Step	Event
1	A force difference occurs across the wall creating a driving lateral force applied to the wall.
2	The wall rotates semi-rigidly about a point near or somewhere below the anchor location on the resisting side of the wall.
3	Soil on the dredge side of the wall resists rotation.
4	As the load increases, full passive pressure develops at and below the ground surface on the resisting side of the wall.
5	The embedded sheet pile begins to displace and rotates.
6	As the load increases, the full passive pressure develops at progressively lower elevations on the wall and rotation continues.
7	Detection and intervention are unsuccessful.
8	Sufficient rotation results in kick out of the wall or an anchor connection fails leading to a collapse of the wall.

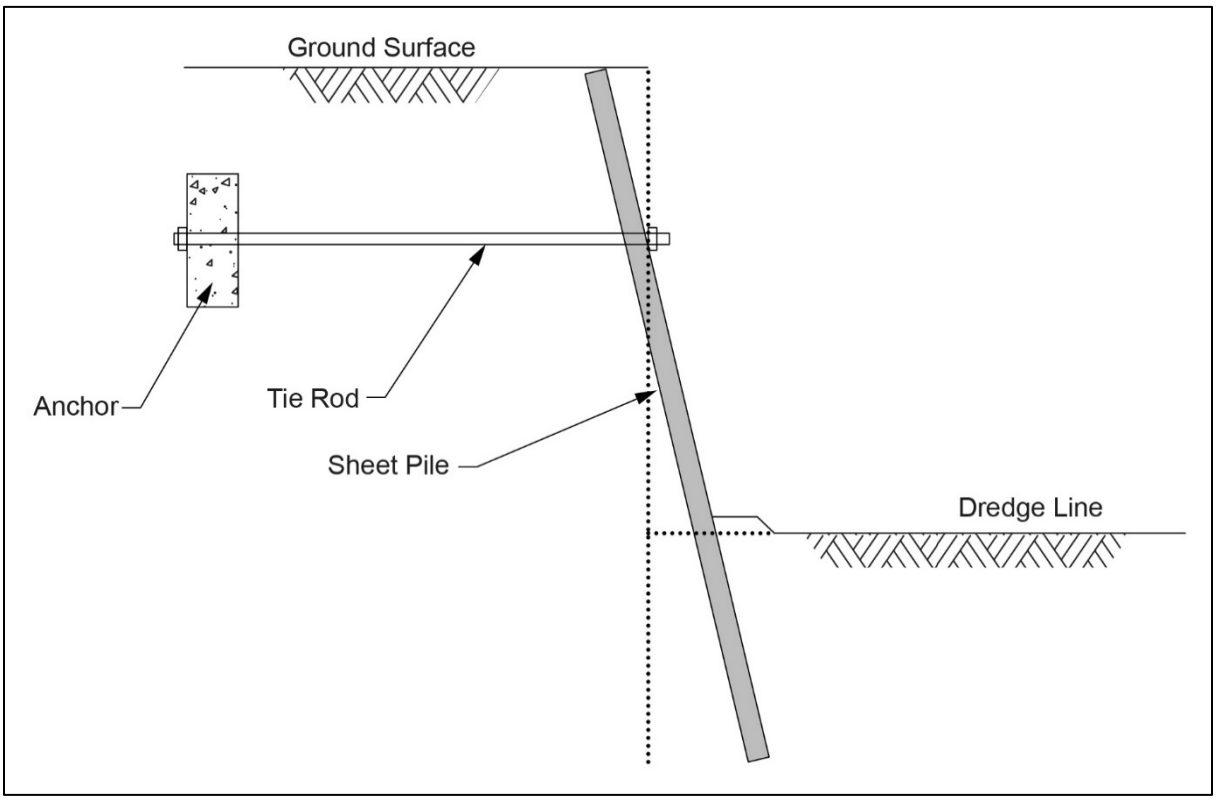

Figure 3.18. Rotational Failure Mode for a Single Anchor Wall

Table 3.18
Failure Mode Progression for PFM AP-1b

Step	Event
1	Due to obstructions behind a tieback wall, the post-tensioned anchors have a relatively steep incline.
2	The vertical loads associated with the wall facing, wales, and vertical component from the tieback anchor exceed the axial capacity of the vertical wall elements and results in settlement of the wall.
3	The wall settlement results in reduced anchor loads, which puts more demand on the vertical wall elements.
4	Load on the wall increases to the point where failure occurs due to in internal structural failure (PFM AP-5a) or rotational failure due to inadequate sheet pile penetration (PFM AP-1a).

3.7.4. PFM AP-2, Global Stability. Progression to failure is described in Table 3.19. This failure mode is illustrated in Figure 3.19.

Table 3.19
Failure Mode Progression for PFM AP-2

Step	Event
1	A force difference occurs across the wall creating a driving slide mass in the vicinity of the wall.
2	There is also a vertical force on the retained side of the wall, increasing driving forces acting on a rotating and/or sliding mass of soil that includes the wall and anchor.
3	As the load increases or resistance decreases due to drop in water levels or to scour and erosion of resisting soil at the base of the wall, the acting shear stress in the soil mass begins to exceed the shear strength of the soil.
4	The driving forces acting on the mass of soil overcome the resisting soil strength with a critical failure surface going around the anchor and wall.
5	Detection and intervention are unsuccessful.
6	The wall, anchor, and surrounding soil rotate and/or slide until the soil behind the wall slides.

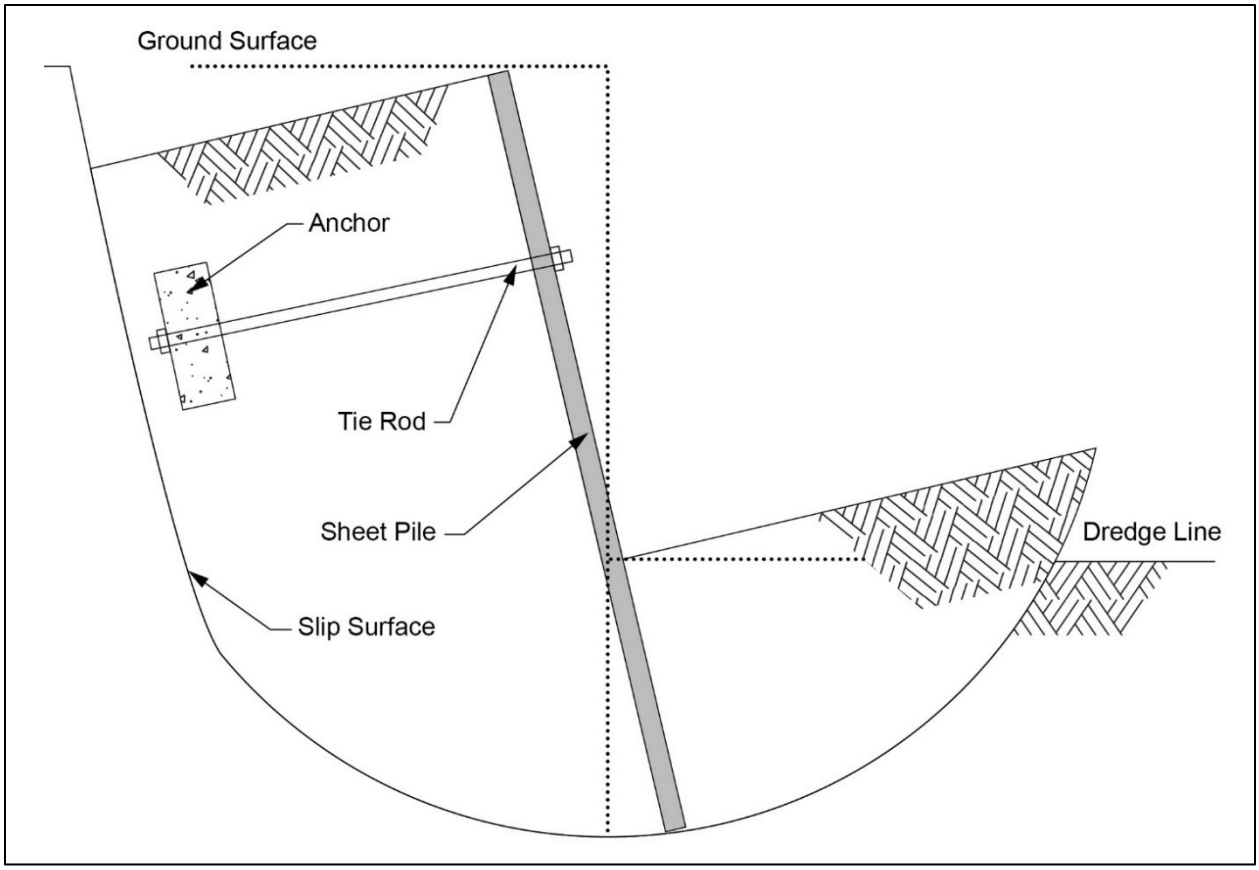

Figure 3.19. Global Stability Failure Mode

3.7.5. PFM AP-3, Anchor Stability Failure. Progression to failure is described in Table 3.20.

Table 3.20
Failure Mode Progression for PFM AP-3

Step	Event
1	Retained lateral soil load increases or resisting side water and soil load decrease causing tension in the anchor rod and lateral forces on the anchor to increase.
2	As the load increases, the tension on the anchor exceeds the capacity of the soil that restrains the anchor and the wall begins to displace.
3	Displacement continues leading to a structural strength failure of the sheet pile (see PFM AP-5) or rotational failure (see PFM AP-1a).

3.7.6. AP-4, Internal Erosion (foundation seepage and piping undermining wall). Progression to failure is described in Table 3.21.

Table 3.21
Failure Mode Progression for PFM AP-4

Step	Event
1	The river or pool falls while water is retained in the soil on the landside of the wall creating a head differential across the structure.
2	Seepage through the foundation is sufficient to heave soil at the waterside ground surface.
3	A layer of pipeable soil exists waterside of the wall. The exit at the waterside ground surface is unfiltered and a pipe forms.
4	Foundation material that falls into the pipe is not sufficient to clog and stop progression.
5	Horizontal flow and gradient are sufficient to continue to move foundation soils to the surface.
6	Detection and intervention are unsuccessful.
7	The pipe enlarges, the wall deflects, and the interlocks become separated, leading to failure as retained soil and water flow through a separation between adjacent sheets.

3.7.7. PFM AP-5, Strength of Structural Elements.

3.7.7.1. PFM AP-5a, Internal Structural Failure (flexural failure of pile). Progression to failure is described in Table 3.22.

Table 3.22
Failure Mode Progression for PFM AP-5a

Step	Event
1	Retained lateral soil and water load increases or resisting side water and fill decreases causing increased internal moment and shear in the sheet pile.
2	The pile section has inadequate section properties and a plastic hinge forms in the steel pile.
3	Excessive deflection of the pile occurs.
4	The pile fractures or the anchor connection fails (Figure 3.20 with failure of a sheet pile shown).
5	Detection and intervention are unsuccessful.
6	Without the support of the pile or anchor, the wall collapses.

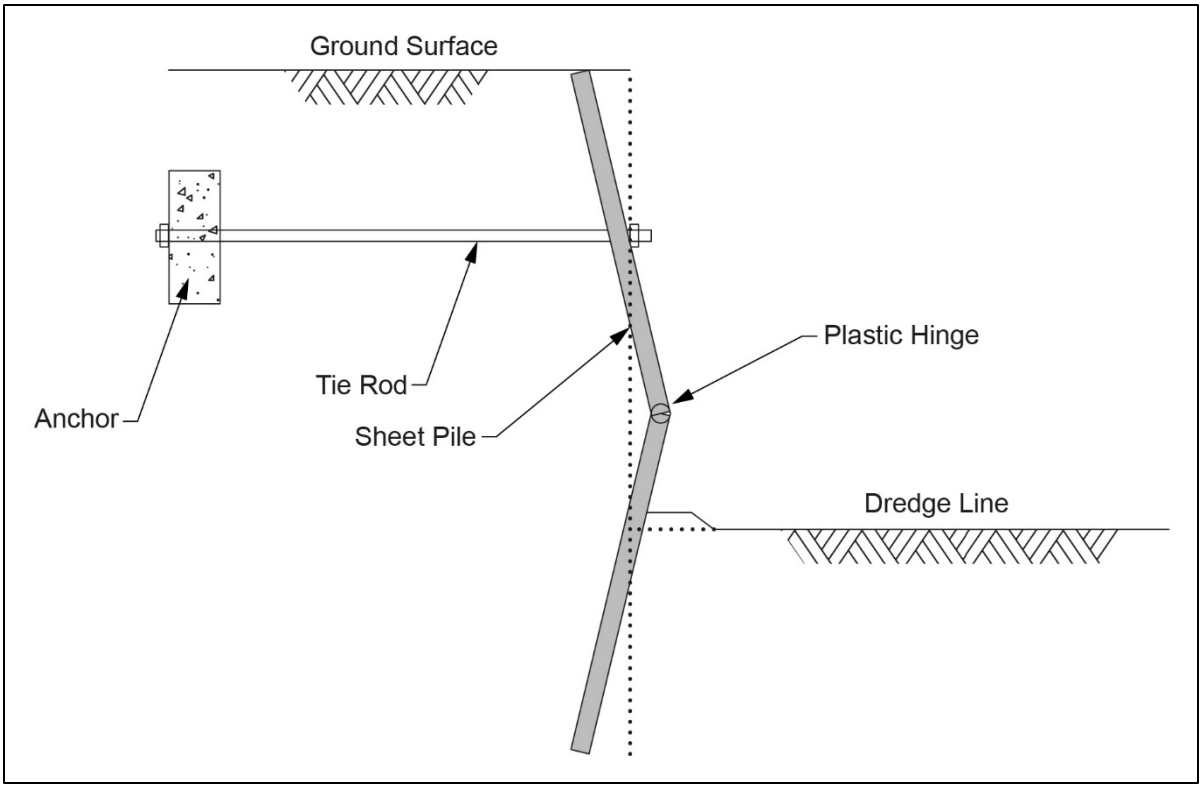

Figure 3.20. Structural Strength Failure Mode for a Single Anchor Wall

3.7.7.2. PFM AP-5b, Tie-Rod Failure. Progression to failure is described in Table 3.23.

Table 3.23
Failure Mode Progression for PFM AP-5b

Step	Event
1	Retained lateral soil load increases or resisting side water and soil load decrease, causing tension in the anchor rod and lateral forces on the anchor to increase.
2	As the load increases and/or the cross-sectional area of the rod may be decreased by corrosion.
3	The anchor tie-rod begins to yield, and the rod elongates.
4	Detection and intervention are unsuccessful.
5	The tension capacity of the rod is exceeded and the rod fractures leading to a rotational failure of the wall, see PFM CP-2.

3.7.7.3. PFM AP-5c, Wale or Tie-Rod Connection Failure. Progression to failure is described in Table 3.24.

Table 3.24
Failure Mode Progression for PFM AP-5c

Step	Event
1	Retained lateral soil load increases or resisting side water and soil load decrease, causing tension in the anchor rod and lateral forces on the anchor to increase.
2	As the load increases, the tie-rod to pile connection capacity is exceeded.
3	The capacity of the connection may be reduced by corrosion.
4	Detection and intervention are unsuccessful.
5	The connection fails and rod separates from the pile leading to a rotational failure of the wall, see PFM CP-2.

3.7.8. Performance Aspects Contributing to PFMs. Some aspects of wall performance are not direct failure modes but can contribute to other failure modes. Settlement, scour and erosion, and seismic performance, liquefaction, and cyclic softening are covered here.

3.7.8.1. Settlement. Settlement of anchored retaining walls can contribute to failure of the anchorage either through stability failure (pull-out) of the anchor (PFM AP-3) or causing structural strength failure of the anchor (PFM AP-5).

3.7.8.2. Scour and Erosion. Scour and erosion may affect wall performance by eroding the ground at the base of the wall.

3.7.8.2.1. The soil at the base of a wall is subject to loadings due to stream velocity and/or wind wave action that produce hydraulic shear stresses acting on the soil that supports the wall. Erosion progresses removing soil, decreasing passive soil resistance, and increasing loads on the wall.

3.7.8.2.2. Seepage paths are shortened leading to increased seepage gradients. The erosion may connect water to otherwise isolated pervious zones.

3.7.8.2.3. The duration of the event and erodibility of the soil allow sufficient loss of resisting forces and lead to failure by inadequate pile penetration (PFM AP-1), global stability failure (PFM AP-2), anchor stability failure (PFM AP-3), internal erosion failure (PFM AP-4), or by strength failure of the structural elements (PFM CP-5).

3.7.8.3. Seismic Performance, Liquefaction, and Cyclic Softening.

3.7.8.3.1. For this aspect of performance, an earthquake event occurs that produces a ground motion where the CSR exceeds the CRR. In addition, liquefaction or cyclic softening is triggered behind the wall (retained side), in front of the wall (below dredge line along pile), or below the pile tip.

3.7.8.3.2. Liquefaction that is triggered in sand-like soil results in densification, generation of excess pore pressures, and reduction in available shear strength.

3.7.8.3.3. Cyclic softening is triggered in saturated clay-like materials when the CSR exceeds the CRR and results in a reduction in available shear strength.

3.7.8.3.4. Reduction in shear strength behind the wall results in an increased lateral load to the back of the wall and leads to an internal structural failure (PFM AP-5), rotational failure of the wall (PFM AP-1a), or global stability failure (PFM AP-2). Loss of soil shear resistance in the soil around the anchor can also result in an anchor failure (PFM AP-3). Likewise, reduction in strength in front of the wall results in a decreased passive resistance and leads to an internal structural failure (PFM AP-5), rotational failure of the wall (PFM AP-1a), or global stability failure (PFM AP-2).

3.7.8.3.5. Reduction in shear strength below the pile tip results in a decreased resistance along sliding surfaces and results in rotational global stability failure (PFM AP-2).

3.7.8.3.6. Dynamic settlement along the length of the pile or below the pile that occurs from densification could result in settlement related performance issues. Lateral displacements resulting from lateral spreading can result in performance issues or total failure of the wall system.

3.8. General PFMs for Wall Transitions (WT).

3.8.1. PFM WT-1, Wave Attack Erosion. Progression to failure is described in Table 3.25. Settlement of the transition may cause this failure mode to occur at more frequent events than if the transition elevation is maintained.

Table 3.25
Failure Mode Progression for PFM WT-1

Step	Event
1	The river or pool rises for a sufficient duration that a steady-state wave condition is developed.
2	Waves attacking the embankment tying into a floodwall concentrate flow leading to loss of vegetative cover followed by erosion of soil.
3	Head cutting or sloughing of soil progresses up and along the wall lowering the crest adjacent to the end wall (Figure 3.21).
4	Erosion progresses until the crest is below the still water level allowing uncontrolled flow to overtop the embankment.
5	Detection and intervention are unsuccessful.
6	Gross enlargement of the embankment and/or global instability of the wall occurs leading to a beach of the embankment.

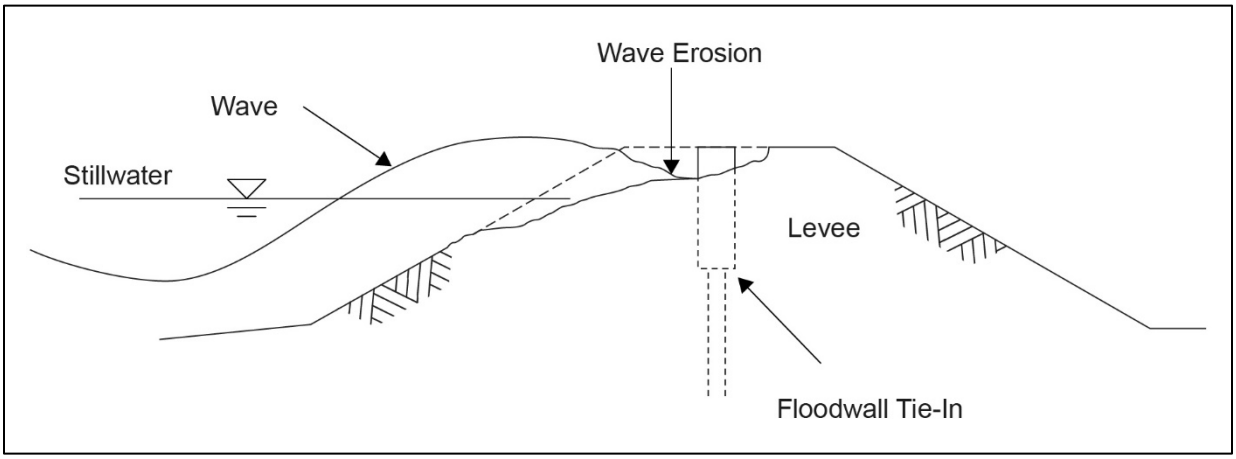

Figure 3.21. Wave Attack Erosion at Floodwall Tie-In

3.8.2. PFM WT-2, Overtopping Erosion. Progression to failure is described in Table 3.26. Photos of failures at earthen levee embankment to floodwall transitions in New Orleans, LA, during Hurricane Katrina are shown in Figure 3.22 and Figure 3.23. Settlement of the transition may cause this failure mode to occur at more frequent events than if the transition elevation is maintained.

Table 3.26
Failure Mode Progression for PFM WT-2

Step	Event
1	The river or pool rises for a sufficient duration that a steady-state overtopping and/or wave condition can occur.
2	Water and/or wave over splash is concentrated at the end of the wall or falls over the wall impacting the soil below.
3	The vegetative cover is lost followed by loss of soil along the floodwall.
4	Head cutting progresses up and along the wall lowering the crest adjacent to the wall end or soil erosion occurs behind the wall leading to loss of passive soil resistance.
5	Erosion progresses until enough passive soil is removed to cause an instability of the wall. Detection and intervention are unsuccessful.
6	Erosion of the embankment continues and/or undermining of the wall occurs leading to a breach of the embankment.



Figure 3.22. Photo of an Overtopping Failure at a Levee to Floodwall Transition in New Orleans After Hurricane Katrina (From Unpublished Report by the Interagency Performance Evaluation Taskforce (IPET)) (IPET, 2007)



Figure 3.23. Photo of an Overtopping Failure at a Transition from a Levee to a Control Structure Wing Wall Near New Orleans After Hurricane Katrina (Google)

3.8.3. PFM WT-3, Internal Erosion (Seepage and Piping) Around Tie-In. Progression to failure is described in Table 3.27.

Table 3.27
Failure Mode Progression for PFM WT-3

Step	Event
1	A head difference occurs across the transition resulting in seepage through the foundation sufficient to heave soil at the landside ground surface.
2	A layer of pipeable soil exists underneath the transition.
3	The exit at the landside ground surface is unfiltered.
4	A continuous stable roof is formed by the base of the embankment that ties-in with the wall.
5	Material in the foundation fails to clog the pipe and flow through the foundation is sufficient to carry material to the landside exit.
6	Horizontal flow and gradient are sufficient to continuously transport eroded soil particles to the exit and advance the pipe to the waterside.
7	Detection and intervention are unsuccessful.
8	The pipe enlarges and the embankment collapses leading to breach due to uncontrolled flow over the embankment around the end of the wall.

3.8.4. PFM WT-4, Concentrated Leak Erosion Along Walls Parallel or Perpendicular to the Earth Embankment. Floodwalls may tie directly into an embankment as shown in Figure 3.22 and Figure 3.23. Alternately, earth retaining walls oriented perpendicular to the axis of the water retaining earth embankment may be used to retain fill at transition to a floodwall, closure structure, or a hydraulic structure, as shown in Figure 3.24. For either configuration, progression to failure is described in Table 3.28.

Table 3.28
Failure Mode Progression for PFM WT-4

Step	Event
1	A poorly compacted layer or zone or a gap exists between the wall and an embankment.
2	There is no sheet pile tie-in or the tie-in is ineffective.
3	Flow and gradient through the zone are sufficient to initiate erosion of the embankment materials through an unfiltered exit.
4	The fine-grained embankment material forms a roof for the erosion pipe or stable sidewalls of a crack or gap are maintained.
5	There is no material on the waterside to act as a flow limiter and halt progression.
6	Gross enlargement of the pipe is started, the process would include headcut/downcut followed by widening due to lateral erosion.
7	Detection and intervention are unsuccessful.
8	Erosion of the embankment continues and/or undermining of the wall occurs leading to a breach of the embankment.



Figure 3.24. Retaining Walls Perpendicular to an Embankment (Louisville District, USACE)

3.9. Mandatory Requirements. Structures with a potential of one or more loss of life must be considered critical.

Chapter 4
General Design Requirements

4.1. Introduction. This chapter describes the basis for the minimum design requirements used in this manual. It defines the performance modes and limit states used for analysis and design. It provides a description of Load and Resistance Factor Design (LRFD) and Allowable Strength Design (ASD) methods that are used for analysis and design. It also contains descriptions of performance requirements.

4.2. Performance Modes and Limit States.

4.2.1. Performance Modes. Examples of PFMs were described in Chapter 3. The failure modes typically require initiation and several steps of progression before complete failure or breach of the wall system occurs. For deterministic analysis and design of walls, only the initial failure mechanisms within a complete failure mode are analyzed. Progression to failure beyond the initial step is accounted for implicitly in the minimum requirements. This manual provides standardized procedures for performing the analysis and design of the failure mechanisms, henceforth called performance modes.

4.2.2. Limit States. A limit state is the condition of failure of the performance mode. Failure in this case is defined as a state that prevents the wall from performing its intended function. As described in the previous paragraph, this may be only a portion of the full failure mode and may not result in breach of the wall system.

4.2.3. The performance modes and limit states are standardized, which allows consistent reliability and performance in analysis and design. Specific performance modes and limit states for analysis and design of walls are described in Chapters 7 through 11. This chapter describes the general requirements and targets for analysis and design of the performance modes.

4.3. Design Basis.

4.3.1. General. Hydraulic retaining walls and floodwalls must be designed to meet minimum requirements for the strength and stability failure modes described in this manual. Deterministic designs are performed using LRFD or ASD.

4.3.2. Walls As Parts of Dams or Levee Systems. Walls that are features of a dam or levee system should be designed to achieve levels of reliability commensurate with the desired levels of reliability of the dam or levee system. Initial designs will meet the minimum requirements of this manual. The resulting initial designs will then be evaluated using a risk-informed design process detailed in EM 1110-2-1913. This will determine whether they achieve levels of reliability commensurate with consequences of poor performance or failure, including economics and loss of life.

4.3.3. Load Resistance Factor Design and Allowable Strength Design.

4.3.3.1. LRFD is a design procedure intended to provide structures with adequate reliability against exceeding specified limit states. Load factors are used with specified nominal loads that, when combined with resistance factors and specified nominal strengths, will provide structures with reliability that meets or exceeds targeted values.

4.3.3.2. ASD. Allowable strength design, allowable stress design, and factor of safety design are considered ASD in this manual. In ASD, load effects are compared to a single allowable strength, allowable stress, or safety factor. Minimum requirements for ASD are usually determined by past performance and are generally not derived by reliability methods. However, the requirements are expected to result in walls with a very low probability of failure.

4.3.3.3. At the time of this manual, USACE has adopted LRFD for strength design of reinforced concrete and structural steel. Other performance modes are designed with ASD.

4.3.4. Load Resistance Factor Design.

4.3.4.1. The basic safety check in LRFD may be expressed mathematically as shown in Equation 4.1. Members and connections are designed using LRFD by satisfying Equation 4.1 for each limit state, unless otherwise specified.

$$\sum \gamma_i Q_{ni} \leq \varphi R_n \qquad \text{(Equation 4.1)}$$

Where:

γ_i = load factors that account for variability in loads to which they are assigned

Q_{ni} = nominal load effects defined in Chapter 6

φ = resistance factor that reflects the uncertainty in the resistance for the particular limit state and, in a relative sense, the consequence of attaining the limit state

R_n = nominal resistance

4.3.4.2. Load and resistance factors are defined for reinforced concrete hydraulic structures in EM 1110-2-2104 and for hydraulic steel structures in EM 1110-2-2107. Application of LRFD for analysis and design of walls is described in Chapters 7 through 11.

4.3.5. Allowable Strength Design. Design using ASD will be performed using the methods described in this manual. ASD is performed using factor of safety, single load factor, allowable stress, or allowable strength design methods, depending on the performance mode.

4.3.6. Service Life. The project service life affects the minimum requirements for the performance modes. With increased service life the probability of infrequent load events increases and the factors of safety, load factors, etc., are increased to provide adequate reliability. According to ER 1110-2-8159, a minimum project service life of 100 years will be used for major infrastructure projects such as locks, dams, and levees. This is the basis of minimum requirements in this manual.

4.4. Performance Requirements

4.4.1. Walls are designed or evaluated against strength and serviceability limit states. These limit states have different goals for performance. They can help inform expert judgment on the conditional probability of failure.

4.4.1.1. Strength. Examples of strength limit states are: yielding, buckling, fracturing, rotating, and sliding. When exceeded, these limit states result in failure of the wall. In designing or analyzing a structure for strength, the proportions of the wall and its components, are such that the computed loading forces do not exceed the defined limit state. This is performed by using factored loads and resistance with LRFD, or by unfactored loads with ASD. The selection of nominal loads and the load factors or the minimum factor of safety are intended to provide reliability against exceeding a limit state.

4.4.1.2. Serviceability. Serviceability limit states are those related to the use of the structure. Exceeding the serviceability limit state results in a wall that is unsuitable for its intended use. Walls, and members thereof, are designed to have adequate stiffness. This limits deflections, lateral drift, settlement, cracking, or other deformations that adversely affect the intended use and performance of the structure.

4.4.1.3. Serviceability Requirements. Serviceability requirements are met through design factors of safety, load and resistance factors, resultant location, deflection limits, or stress limits. Exceeding serviceability limit states is poorly correlated with probability of failure. Walls that exceed serviceability limit states may still be acceptable by strength limit states. But the wall may require economic expenditures for repair or rehabilitation in order to provide function for operations, acceptable leakage, and adequate service life.

4.4.2. Performance Requirements as a Function of Load Categories. Loads on floodwalls and retaining walls are separated into three categories depending on their likelihood of occurring. The categories are usual, unusual, and extreme. Usual loads are normal loads that are routinely experienced by the structure. Unusual loads are rare, but likely during the service life of a structure. Extreme loads are possible, but unlikely over the service life of the structure. These categories are discussed in more detail in Chapter 6. Performance requirements for each load category are:

4.4.2.1. Usual Load Performance Requirements. A usual event is a common occurrence and the structure is expected to perform in the linearly elastic range. Deformations are expected to be minimal. As these are serviceability limit states, walls are therefore designed to meet serviceability requirements for usual loads. Serviceability may be achieved directly from requirements, such as deflection limits. It may also be achieved by the use of factors of safety or load factors intended to limit deformations and keep them in an elastic range under service loading.

4.4.2.2. Unusual Load Performance Requirements. The performance under unusual loads is expected to be essentially elastic. The structure is expected to deform under load, but to return at or near its original position and major rehabilitation is not required. Some minor nonlinear behavior is acceptable without interruption of function. Any necessary repairs are expected to be minor and only to ancillary features. Construction or maintenance events are usually considered as unusual load cases. Unusual loads may be designed using strength or serviceability limit states. However, usually the factors of safety and the load factors for strength limit states include serviceability considerations.

4.4.2.3. Extreme Load Performance Requirements. The structural behavior under extreme loads may be nonlinear. It should be expected to sustain damage, but not to collapse and cause uncontrollable flooding or loss of function. Some deformation may be permanent, and rehabilitation may be required after loading. Extreme load cases are designed for strength with the goal of providing adequate reliability to survive the load events. Occasionally serviceability checks are also made for deflection control (such as in lateral loading of pile-founded structures).

4.4.3. Performance Requirements by Wall Type. For all wall types, the basic performance requirements are that wall components and/or units function as an integrated system without failure that results in uncontrolled flooding or loss of function. Specific considerations for each wall type are provided in the following paragraphs. Walls that meet the minimum requirements in Chapters 7 through 11 are intended to perform according to these requirements.

4.4.3.1. Floodwalls.

4.4.3.1.1. Floodwalls are typically not loaded or are minimally loaded during usual events. The structural and foundation components of the floodwall are designed to minimize deflections of the entire system during unusual events. For extreme events, the structural and foundation components have robustness to ensure survival without catastrophic failure and the uncontrolled release of flood water before the system is overtopped. The wall system provides ease of operation and maintenance during flood events.

4.4.3.1.2. The robustness provided by the floodwall under extreme loads is sufficient to prevent damage to the structure that cannot be repaired during the estimated recovery time before the next major storm. It is sufficient to prevent the interruption of public, lifeline, and business services in the protected area that have catastrophic regional or national impacts.

4.4.3.2. Earth Retaining Walls. The structural and foundation components of the earth retaining wall are adequately stable to minimize deflections (horizontal or vertical) of the entire system. Under usual or unusual load cases, deformations do not cause spalling of concrete or damage to appurtenant components, such as waterstops and drains. The top of the wall is not lowered from settlement sufficiently to affect serviceability.

4.4.3.3. Dam Walls. Dam walls may have permanent differential water pressures. Under usual or unusual load cases the structural and foundation components of the wall are designed to minimize deflections (horizontal or vertical) of the entire system. For water levels of extreme events, the requirements are similar as for floodwalls. With water permanently retained by the wall, design deformations under almost all events should be limited as any required repair for recovery may be difficult.

4.4.3.4. Dam Crest Walls. Dam crest walls are primarily intended to resist wave loads created by high wind events when the pool is near the crest of the dam. The wall is located on the crest of a dam embankment and may be cyclically loaded by waves. The structural and foundation components of the wall will be designed to minimize deflections (horizontal or vertical). Failure of the wall may lead to failure of the embankment. Therefore, the wall is designed to provide high reliability against failure. Dam crest walls must be analyzed and designed using the minimum requirements for unusual loads for both unusual and extreme load categories. This does not apply to earthquakes.

4.4.3.5. Seawalls. Seawalls typically function as earth retaining walls when wave events are not present. The performance requirements under those loads are as described previously.

4.4.4. To ensure that performance requirements are met, minimum requirements have been established. Walls are analyzed and designed using the loading conditions in Chapter 6 and the performance criteria established in Chapters 7 through 11. Determination of information to be used in the analyses is provided in Chapter 5.

4.5. Mandatory Requirements.

4.5.1. Floodwalls and other hydraulic retaining walls must be designed to meet minimum requirements for the strength and stability failure modes described in this manual.

4.5.2. Because of their location, dam crest walls must be analyzed and designed using the minimum requirements for unusual loads for both unusual and extreme load categories.

Chapter 5
Site Information

5.1. Introduction.

5.1.1. To analyze failure modes for walls, the engineer must estimate loading conditions and resisting forces. Specifically, those resisting forces necessary to satisfy strength and serviceability limit states. This estimation requires a site characterization that matches the project's risk and level of study. Site characterization involves obtaining and interpreting physical data.

5.1.2. The focus of this chapter is on site information needed for evaluating earth loads and resistances. Site information typically includes topography, sounding information, and foundation characterization, especially stratigraphy and material properties. To perform analysis, the engineer typically combines this information into models that calculate soil driving and resisting forces. Analyses need to incorporate the time dependency of loads and associated foundation response.

5.2. Site Information Category.

5.2.1. Uncertainty is inherent in evaluating site conditions and modeling soil response. A few examples of these uncertainties include:

5.2.1.1. Natural variation in soils due to geomorphic processes.

5.2.1.2. Soil responses to hydrologic and hydraulic loading.

5.2.1.3. Future conditions.

5.2.1.4. Inaccurate or incomplete survey and datum information.

5.2.2. Because of these uncertainties, wall reaches must be grouped into one of three categories of site information. The categories are (1) well-defined, (2) ordinary, and (3) limited. The site information category determines the factor of safety used in design or analysis.

5.2.3. Factors of safety for performance modes are presented for each wall type in Chapters 7 through 11. Generally, greater uncertainty requires a higher factor of safety to maintain consistent levels of reliability. Lower factors of safety are permitted where there is well-defined site information. Necessary information includes: performance, foundation conditions, type of structure, hydrologic and hydraulic parameters, and survey data. Higher factors of safety are required when there is limited information on loading conditions, foundation properties, or structure properties. The three site information categories are described, in general terms, in the following paragraphs.

5.2.4. Well-Defined Site Information.

5.2.4.1. General. This category is restricted to use for evaluation of existing projects with known performance history and certain future conditions. To qualify as well-defined, site information must satisfy the following requirements:

5.2.4.1.1. Records of construction, operation, and maintenance are available. Performance should be documented for the full range of design load conditions.

5.2.4.1.2. Foundation (soil) stratigraphy, material parameters, and site geometry can be established with a very high level of confidence. Exploration and testing were performed with sufficient rigor that the chance of encountering unforeseen foundation conditions is extremely low.

5.2.4.1.3. Uncertainty associated with hydraulic loading and geodetic datums is minimal. Top of wall elevations can be established with a high level of confidence based on recent survey data.

5.2.4.1.4. The governing load conditions can be established with a high level of confidence.

5.2.4.1.5. Past loadings must be equal to or greater than loadings used for evaluation.

5.2.4.2. The following paragraphs provide guidance for application of performance information to justify that a site is well-defined. Walls that performed well during a past loading event provide information. That information can inform the engineer's judgment on anticipated performance during future loading events of a similar magnitude.

5.2.4.3. Two assessments need to be made to determine if past performance can be used to justify as being well-defined. First, determine the maximum loading that a wall has experienced. Second, determine the duration of this maximum loading. All three criteria listed below must be met for past performance to be used in the site information category assessment.

5.2.4.3.1. The magnitude of the maximum loading must be equal to or greater than the analysis loading.

5.2.4.3.2. The duration of the past loading must be equal to or greater than the duration assumed for the analysis.

5.2.4.3.3. The wall performance, with respect to deflection and seepage during the past maximum water stage, must be adequately documented. (See section 5.2.4.5 for additional considerations.)

5.2.4.4. If all three of the above criteria are met, then past performance can be considered in the assessment of site information category. If any of the three criteria are not met, then past performance cannot be considered in the assessment of site information category.

5.2.4.5. When past performance is evaluated, consider changes that could affect wall performance relative to stability and seepage. Examples include the following:

5.2.4.5.1. Major changes with respect to vegetation, encroachments, or animal burrows.

5.2.4.5.2. Major changes to materials due to degradation or deterioration (such as fatigue, scour, Alkali Aggregate Reaction/Alkali Silica Reaction).

5.2.4.5.3. Other changes that did not exist at the time when the past loading event occurred.

5.2.4.6. Available exploration and testing information (such as soil classification tests, borings) may not meet the requirements for well-defined site information in section 5.2.4.1. However, the engineer may use minimum requirements under the well-defined category in the following conditions.

5.2.4.6.1. Measurements recorded during a water stage indicate higher levels of confidence in structural response than results based on investigations alone. Structural response can be evaluated based on deflections and piezometer response. The analysis loading less than or equal to the maximum historical load.

5.2.4.6.2. The engineer should perform back analyses of the past performance data to calibrate model parameters. Model parameters should also be consistent with available site information data. The calibrated parameters can then be used with the design loadings to assess future performance. If no site information constrains back analysis of past performance events, the reach cannot be classified as well-defined.

5.2.4.7. Site information for a given wall may be well-defined for some loadings and ordinary for others. For example, the site information category would be well-defined for the lower loadings with sufficient past performance history. However, the site information category would be ordinary for higher loadings without sufficient past performance history.

5.2.5. Ordinary Site Information. This category applies to most new project designs and may also apply for existing structures. To qualify as ordinary, site information must satisfy the following requirements:

5.2.5.1. For existing structures, available records of construction, operation, and maintenance indicate the structure has met all performance objectives. The structure has experienced few, if any, of the design load conditions.

5.2.5.2. For new and existing structures, all conditions need to be established with a high level of confidence. These conditions include the foundation stratigraphy, material parameters, and site geometry. Exploration and testing indicate the chance of encountering unforeseen foundation conditions is low. Thus, small variations would be covered by design factors of safety.

5.2.5.3. Uncertainty associated with hydraulic and geodetic datums is minimal. Top of wall elevations can be established with a high level of confidence based on existing survey data.

5.2.5.4. The governing load conditions can be established with a high level of confidence.

5.2.5.5. Existing survey data may be used only if the uncertainty associated with the geodetic data is minimal, and the top of wall elevations can be established with a high level of confidence.

5.2.6. Limited Site Information. This category should only be applied to structures designated as normal (Chapter 3). Critical structures cannot be designed or evaluated based on limited site information where any of the following is true:

5.2.6.1. Foundation (soil) stratigraphy is based on minimal explorations.

5.2.6.2. Governing load conditions cannot be established with a high level of confidence.

5.2.6.3. There is obsolete or missing survey information. Top of wall elevations cannot be established with a high degree of confidence.

5.2.6.4. There is no knowledge of the type, strength, and condition of structural materials.

5.2.7. If some of the project information is unknown for existing wall evaluations, an investigation should be executed. This investigation will ensure that information consistent with an ordinary site classification exists before the evaluation. Missing information to investigate would include one or more critical parameters, such as pile tip depth or soil strength. For example, if construction records of existing walls are missing, field investigations should determine the following:

5.2.7.1. Top of wall elevation.

5.2.7.2. Pile tip elevation.

5.2.7.3. Type of piling.

5.2.7.4. Connection to the cap.

5.2.8. Results from nondestructive methods used to determine wall geometry should be corroborated with results from sufficient destructive test sections. Destructive tests are needed to establish a reasonable degree of confidence in the evaluation results.

5.2.9. A project with limited information may meet the requirements of this EM when very conservative assumptions are used. These situations are addressed on a case-by-case basis in consultation with, and approval by, CECW-EC.

5.3. Topography and Bathymetry.

5.3.1. Topography of features along a floodwall alignment are useful for evaluating the following:

5.3.1.1. Floodwall cross sections.

5.3.1.2. Landside features (such as localized depressions).

5.3.1.3. Waterside features (such as natural berm, erosional features, river bends).

5.3.1.4. Land use (such as roadways and ditches).

5.3.2. Bathymetry can be useful in evaluation of:

5.3.2.1. Unsupported wall height.

5.3.2.2. Erosional features.

5.3.2.3. Seepage entrance conditions.

5.3.3. In general, higher floodwalls and weaker foundations are likely to be more critical sections. For critical sections, evaluations and design needs to use the actual topography and bathymetry, rather than simplified idealized sections.

5.3.4. Two-dimensional (2D) modeling does not account for lateral variation in the following:

5.3.4.1. Topography.

5.3.4.2. Geology.

5.3.4.3. Soil loading and resistance.

5.3.4.4. Sources or sinks along the length of the floodwall alignment.

5.3.5. The influence of 3D issues is likely to occur at the following:

5.3.5.1. The inside of bends in alignment.

5.3.5.2. Transitions between floodwalls and earthen levee embankments.

5.3.5.3. Near the end of any seepage mitigation feature (such as cutoff wall, seepage berm, or line of relief wells).

5.3.6. Use of the 3D finite element method (FEM) can account for these effects. However, the state-of-practice is to supplement 2D analytical tools with observation and judgment.

5.4. Geology.

5.4.1. Assessment of geologic maps along the wall alignment will assist in selection of investigation methods. Additionally, geologic maps can assist with the locations of borings and Cone Penetration Tests (CPTs). General recommendations for boring and CPT locations provide rough targets for spacing. Actual investigation locations should be selected based on existing knowledge of local geology in light of those recommendations. A geologic study may provide useful information on the following site information:

5.4.1.1. Foundation soils are weak and compressible.

5.4.1.2. Foundations soils may be highly variable along the alignment.

5.4.1.3. Potential underseepage issues (such as recent channel deposits).

5.4.1.4. Locations of fill soils.

5.4.1.5. Depth and continuity of aquiclude layers.

5.4.1.6. Surface projection of faults and potentially liquefiable soils.

5.4.2. Information used in a geologic assessment may include:

5.4.2.1. Aerial photographs.

5.4.2.2. Surficial soils maps.

5.4.2.3. Geologic map.

5.4.2.4. Logs from previous investigations.

5.4.3. Fluvial geomorphologic processes, including erosion and deposition, should be determined by the project's geotechnical engineers and geologists together. Knowing these processes provides insight into anticipated subsurface material types and performance issues.

5.4.4. The contact between Holocene and Pleistocene generally results in differing geotechnical characteristics. Holocene soils are younger than about 10,000 to 14,000 years before present (ybp). Pleistocene soils are older than about 10,000 to 14,000 ybp. These contacts should be identified and shown on plans, profiles, and sections when possible.

5.4.5. Several common fluvial geomorphic features are typically associated with specific design and performance challenges. These features include:

5.4.5.1. Oxbows.

5.4.5.2. Overbank deposits.

5.4.5.3. Point bars.

5.4.5.4. Marshes.

5.4.5.5. Crevasse splays.

5.4.6. The engineer should identify these features and correlate them with performance history when possible.

5.5. Reach Selection and Analysis Cross Sections.

5.5.1. Reach selection is discussed in detail in EM 1110-2-1913. For this application, reach selection is the process of subdividing a wall system into discrete lengths. Each length will have similar:

5.5.1.1. Structural and geotechnical characteristics.

5.5.1.2. Geometry.

5.5.1.3. Past performance.

5.5.1.4. Construction and remedial history.

5.5.1.5. Design hydraulic loading conditions (see Chapter 6).

5.5.2. Reach selection enables incremental geotechnical and structural analyses, which are needed for overall wall evaluation.

5.5.3. Each reach should be represented adequately by at least one analysis cross section and associated analysis parameters. This is the principal premise of reach selection. Where conditions along the wall vary significantly, a new reach should be established.

5.5.4. The following considerations should be used to develop an analysis cross section:

5.5.4.1. Representative geology and geomorphology of the wall reach.

5.5.4.2. Wall geometry features such as a height and foundation size.

5.5.4.3. Hydraulic head.

5.5.4.4. Aquifer characteristics such as thickness, material type, continuity, and lateral extent.

5.5.4.5. Blanket characteristics such as thickness, material type, continuity, and lateral extent. For example, a thin blanket in a high hydraulic head condition may indicate potential for underseepage concerns.

5.5.4.6. Topography and bathymetry. For example, a direct connection between the channel and aquifer may be inferred. This may happen for the case of a deep river or stream channel included in the reach.

5.5.4.7. Soft or loose soil layers in the levee or foundation. Soft soils indicate potential for foundation instability during high-water events.

5.5.4.8. Utility crossings. If not properly designed and constructed, utility crossings may be susceptible to piping.

5.5.4.9. Reaches where past performance history indicated acceptable performance in some areas, and unacceptable performance elsewhere. These areas should be split into multiple reaches.

5.5.4.10. Reaches with 3D issues should be separated into multiple reaches. Some 3D issues occur at any of the following:

5.5.4.10.1. River bends.

5.5.4.10.2. Groin areas near a bridge abutment.

5.5.4.10.3. The end of an existing or proposed mitigation area (such as cutoff wall and berm).

5.6. Geotechnical Investigation.

5.6.1. The specific purpose of a geotechnical investigation is to characterize foundation and fill soils. Geotechnical engineers usually analyze attributes such as soil type, ground water level, moisture content, and density, and the five key material parameters described below. The first three parameters are used for conventional design. The last two are needed if performing continuum-based finite element or finite difference analysis of soil-structure interaction.

5.6.1.1. Water Flow Characteristics. Rate at which water moves through the soil as a function of a hydraulic gradient or a change in volume. Characterized using vertical (v) and horizontal (h) hydraulic conductivity (k_v and k_h) and coefficient of consolidation (c_v and c_h).

5.6.1.2. Strength. Ultimate resistance to shear stresses. Strength is generally considered to be undrained or drained. Drainage depends upon the loading rate relative to wall or foundation size and water flow characteristics. Strength is characterized using shear stress at failure (τ_f) through the undrained strength ($\tau_f = s_u$), friction angle ($\tau_f = \sigma'_n \tan \phi'$), or combination of effective stress cohesion and friction angle for peak strength ($\tau_f = c' + \sigma'_n \tan \phi'$).

5.6.1.3. Volume Change (Compression). Change in volume due to change in effective stresses. This can be visualized as the change in size of a soil element; typically characterized using compression (C_c) and recompression (C_r) indices. The overconsolidation ratio (OCR), or the maximum historic effective stress level the soil has experienced relative to the current effective stress level, is also required.

5.6.1.4. Shear Distortion (Stiffness). Resistance to shear stains that result from total shear stresses. This can be visualized as the change in shape of a soil element. Stiffness is characterized using shear modulus (G). See Chapter 16.

5.6.1.5. Volume Change (Dilation). Change in volume due to shear deformations. This can be visualized as the change in size of a soil element due to its change in shape. Dilation is characterized using dilation angle (ψ). See Chapter 16.

5.6.2. Results of an investigation ultimately lead to assessing geotechnical PFMs and design of a wall system. Specifically, the information obtained will be used to estimate the following to identify possible construction problems:

5.6.2.1. Earth loads;

5.6.2.2. Earth resistance;

5.6.2.3. Water pressures; and

5.6.2.4. Settlements.

5.6.3. For walls that retain water, the engineer must also assess foundation underseepage conditions. For designs of new walls, this information can be used to select the type and depth of wall.

5.6.4. Techniques used in a geotechnical investigation are summarized in section 5.7, with detailed information found in EM 1110-1-1804. While EM 1110-2-1913 is focused on earthen levee embankments, much of the information presented is also applicable to floodwalls. EM 1110-2-1913 provides details in addition to that covered herein. Specifics relate to data collection and subsurface investigations, laboratory testing, borrow areas, and subsurface interpretation.

5.7. Exploration Techniques.

5.7.1. Borings.

5.7.1.1. Borings are used for the following:

5.7.1.1.1. Identify stratigraphic contacts.

5.7.1.1.2. Visually classify soils.

5.7.1.1.3. Locate the depth to the water table.

5.7.1.1.4. Collect samples for laboratory testing.

5.7.1.1.5. Perform certain in situ tests.

5.7.1.2. Drilling, sampling, transport, and sample extrusion and preparation should be done in a manner that minimizes disturbance. This is particularly important when borings are taken to collect samples for laboratory testing of mechanical properties.

5.7.1.3. There are a number of manuals, regulations, and standards that cover borings. Drilling methods are discussed in EM-1110-1-1804. ER 1110-1-1807 should be consulted when developing the drilling plan for borings that pass through dams and levees. Boring logs should be prepared in the field according to ASTM D2488. Logs should be updated according to ASTM D2487 and based on an evaluation of laboratory testing results.

5.7.2. In Situ Testing of Foundation Material.

5.7.2.1. Application of in situ testing results is a rational and cost-effective way to extrapolate laboratory test results to other areas of a site. However, results of in situ tests are typically not a true measurement of a mechanical property. In situ tests provide an index of soil response, which is often influenced by strength, stiffness, compressibility, and water flow characteristics. Selection of soil design properties requires some level of local calibration when applying correlations.

5.7.2.2. The three most common in situ tests applicable to strength assessment for floodwall design are:

5.7.2.2.1. Standard penetration test (SPT).

5.7.2.2.2. Cone penetration test (CPT).

5.7.2.2.3. Vane shear test (VST).

5.7.2.3. The pressuremeter test (PMT) and flat dilatometer test (DMT) are more appropriate for stiffness evaluation. Those in situ tests are discussed in Chapter 16.

5.7.2.4. SPT. The SPT (ASTM D1586) is routinely used as part of a geotechnical exploration. The SPT provides a measure of in situ soil strength through blow counts, and also provides a disturbed soil sample. Use of blow counts (N-value) to assess engineering properties is most applicable in sandy soils with no gravel. Results can be used to estimate relative density.

5.7.2.5. When not using a calibrated auto hammer, the SPT N-value has a relatively high variability between operators. The variability is primarily influenced by the amount of energy that is transferred by the hammer to the sampler. SPT N-values are typically corrected to an average standard efficiency of 60 percent, N_{60}. In clays, N_{60} is typically used for correlations to undrained strength and preconsolidation stress. In sands, an additional correction for effective overburden stress is applied, $(N_1)_{60}$, in the assessment of soil properties. The selection and proper use of correlations require a great deal of judgment and experience. Additional information on use of correlations is provided in section 5.11.

5.7.3. Cone Penetration Test and Piezocone Penetration Test.

5.7.3.1. CPTs should be performed according to ASTM D5778. An engineer or geologist should observe the CPT measurements during penetration. Measurements should be used to select locations for porewater dissipation testing and complementary sample collection. Porewater dissipation testing locations should be below an estimated groundwater elevation.

5.7.3.2. Like the SPT, some correction factors need to be applied to CPT data. These factors may be applied by the contractor. The engineer should verify that the correction has been applied, or they should apply it during their interpretation.

5.7.3.3. Pore pressure acts unequally on the front and back of the cone tip and varies with probe geometry. The measured cone tip resistance (q_c) needs to be increased to the total cone tip resistance, (q_t). The following formula is used: $q_t = q_c + (1 - a_n)u_2$. The parameter a_n is the cone area ratio. The parameter u_2 is the penetration pore pressure measured at the cone shoulder.

5.7.3.4. For analysis of engineering parameters, the total cone tip resistance (q_t) needs to be reduced by the total vertical stress (σ_{v0}). The net cone tip resistance results via the following formula: $q_n = q_t - \sigma_{v0}$.

5.7.3.5. Correction for pore pressure effects and total overburden stress are most significant in soft clays. In clays, q_n is typically used for correlations to mechanical properties. An additional correction for effective overburden stress is applied in sands. This normalized parameter is referred to as q_{t1n} or Q_{tn}. The parameter is used in the assessment of relative density and liquefaction resistance (see Olsen & Mitchell 1995, Robertson & Cabel 2015). The selection and proper use of correlations requires a great deal of judgment and experience. Additional information on use of correlations is provided in section 5.11.

5.7.3.6. CPT soil classification or soil behavior type charts exist (see Douglas & Olsen 1981; Robertson et al., 1986; Olsen & Mitchell 1995; Robertson 2016). An engineer should still perform site-specific calibration of these charts using pairs of CPTs and soil borings. Depending on site conditions, more or fewer CPTs per boring may be selected.

5.7.3.7. Use of CPTs could reduce costs on long stretches of walls with fairly consistent subsurface conditions. Typical consistent geologies include marine or deltaic deposits of soft clays. First the engineer establishes a site-specific correlation between soil borings and CPTs. Next CPTs can be used to evaluate geologic conditions and engineering design parameters between SPT boring locations. However, soil borings should be selected for critical locations. Here visual confirmations of samples with strength and consolidation testing are used directly for evaluation and design.

5.7.4. Vane Shear Test.

5.7.4.1. VST is useful in soft clays, silts, and non-fibrous organic soils. VSTs are used for determining undrained shear strength, stress history, and sensitivity. VSTs should be performed according to ASTM D2573. VSTs are not applicable in sandy soils or non-plastic silts. These soils may result in significant disturbance during installation of the test equipment. They may also allow drainage during testing or overstress typical equipment. Sensitivity of soft soils can be determined as a ratio of peak and remolded shear strengths.

5.7.4.2. Field vane shear strength values require correction to determine an operational shear strength for embankment and foundation design. ASTM D2573 presents correction factors.

5.7.4.3. Field vane shear strength measurements should be considered as an index strength test. This approach comes from the need to apply empirical correction factors to VST data. VST data should be used in conjunction with additional measurements of strength. Strength data should be complemented with an understanding of soil stress history when developing a design strength profile.

5.8. Designing an Investigation Program.

5.8.1. Design of an exploration program consists of selecting the investigation type, spacing, depth, and sampling frequency. The geotechnical investigation program should be laid out by a geotechnical engineer. The engineer should be familiar with the project and the wall types being considered. The geotechnical engineer should coordinate the exploration program development with a geologist familiar with the area.

5.8.2. The engineer should develop a written, comprehensive plan for field investigations to justify the program details. EM 1100-1-1804 contains a general overview of investigation methods, spacing, depths, and sampling frequency. EM 1110-2-1913 presents more details on investigation methods for earthen levee embankments within a risk-informed framework. Many of the recommendations for levees are also broadly applicable to walls discussed in this EM. However, exploration spacing is generally closer and may be deeper for walls than earthen levee embankments, depending upon wall type.

5.8.3. As discussed in EM 1110-2-1804, the details of an investigation program are controlled by the geologic conditions. This section will focus on minimum requirements necessary to achieve a certain site information category. Site information category may be specific to certain wall types.

5.8.4. If possible, investigations should be performed in phases (see ER 1110-2-1150) and treated as a "learn-as-you-go" operation. Typical phases include reconnaissance/feasibility and preconstruction design. Other phases are assessment or post-construction modification to design.

5.8.5. Prior to testing, the engineer should develop hypotheses on the subsurface conditions. These can be based on geological maps, previous investigations and testing, and past performance information. These hypotheses should be tested during the investigation. Results may lead to changes to investigation locations, depths, and sample types and locations. The possibility of changes requires an investigation contract that has some flexibility. During the program, there should be frequent interactions between USACE and the contractor. Preferably USACE personnel should provide onsite supervision and verification of logging descriptions.

5.8.6. Details of an investigation program will control whether design can be based on the site investigation categories of well-defined, ordinary, or limited.

5.8.7. Minimum Exploration Requirements. Table 5.1 summarizes minimum investigation requirements. Additional guidance for planning an investigation is provided in the following sections.

Table 5.1
Minimum Exploration Requirements for Wall Systems in This EM for Design and Assessment

Site Information Category	Minimum Investigation Requirements[1] [2]	Past Performance
Well-Defined	Maximum of 500 ft. (150 m) spacing between investigation along alignment, with a minimum of 3 investigations along alignment per reach. One sample per investigation per geologic unit. Depth requirements per section 5.8.11.	Yes, meeting the 90 percent height criterion.
Ordinary	Same as well-defined.	Not necessary.
Limited	Does not meet a requirement for well-defined/ordinary.	Not necessary.

[1] An investigation may be a soil boring or vertical profile from an in situ test, such as a CPT.

[2] A "sample" may include a SPT split spoon sample, undisturbed sample, or in situ test measurement, such as results from VST, PMT, or CPT.

5.8.8. Exploration Spacing Along Alignment.

5.8.8.1. Investigation spacing is related to project size and discussed in EM 1110-2-1804. Extended projects include highways, power lines, pipelines, and levees. Compact projects include buildings, bridges, and landslides.

5.8.8.2. Floodwalls tend to lie in between extended and compact projects. For instance, floodwalls are often integrated within a levee system and used where there are space limitations. There should be at least 1.5 times as many investigations in a wall section as compared to an earthen levee embankment section.

5.8.8.3. Table 5.1 presents a minimum investigation spacing requirement of a maximum of 500 ft. (150 m) between investigations. If heterogeneous soil conditions or other features exist, that spacing should be further reduced. Additional investigations along the alignment should be performed at special features, including:

5.8.8.3.1. Walls taller than 10 ft. (3 m).

5.8.8.3.2. Earthen levee embankment tie-ins.

5.8.8.3.3. Road crossings.

5.8.8.3.4. River crossings.

5.8.8.3.5. Railway crossings.

5.8.8.3.6. Other closure structures.

5.8.8.4. Additional investigations should be performed at problematic features. These may be areas of poor past performance. There may also be critical geologic features, such as oxbows or recent channels.

5.8.8.5. For special features and problematic features, perform one investigation on both sides of the feature. Depending upon feature size and design issues that arise, an additional investigation might be needed at the centerline.

5.8.9. Cone Penetration Tests.

5.8.9.1. CPTs are generally quicker and less expensive than soil borings. CPTs also provide greater detail on vertical variability in material type and soil strength than a soil boring. However, the engineer should obtain soil borings to do the following:

5.8.9.1.1. Validate soil types within each geologic unit.

5.8.9.1.2. Characterize material properties.

5.8.9.1.3. Validate correlations used in the characterization process.

5.8.9.2. For validation purposes, a CPT should be performed adjacent to a soil boring, rather than in between soil borings. This minimizes the influence of spatial variability on correlations to soil type and material properties, which results from the distance between a CPT and boring. Not all soil borings will require a paired CPT. Five CPTs, with one location paired with a soil boring, is a typical starting ratio for many exploration programs. Depending on geologic conditions and experience in the area, the ratio of CPTs to borings may need to be adjusted. CPTs are included as an exploration when assessing minimum requirements for exploration spacing.

5.8.10. Exploration Spacing Perpendicular to Alignment.

5.8.10.1. Soil conditions are often not horizontally layered with constant hydrogeological and mechanical properties perpendicular to the wall alignment. For example, investigations perpendicular to the alignment may be needed when seepage is a component to analysis. Blanket thickness may not be the same on both sides of a wall and should be measured through investigations. Where applicable and feasible, investigations should be performed on both landside and waterside of a wall to fully investigate seepage entry and exit conditions.

5.8.10.2. Variability in strength may be important when investigating a floodwall on top of an earthen levee embankment. The Q-case centerline undrained strength below an existing earthen levee embankment is typically higher than that in front of the toe. Application of centerline undrained strength for the entire section would be unconservative and may lead to a stability failure. Application of free field undrained strength from in front of the toe to the entire section may be overly conservative. This can result in unnecessary repairs or an excessively costly design. When applicable, investigations should be performed across the alignment to characterize potential changes in undrained strength.

5.8.10.3. For a wall at the top of a slope, strength will also vary perpendicular to the alignment. Soil strength will generally decrease within a soil layer at a constant elevation as the toe of the slope is approached. Measurements of strengths are useful below various portions of the slope to assess global stability and wall rotation.

5.8.10.4. When applicable and feasible, at least one set of three investigations should be perpendicular to the alignment for each reach. Investigations should be performed at the following locations:

5.8.10.4.1. Below the centerline of the wall.

5.8.10.4.2. In front of the toe(s) of any slopes.

5.8.10.4.3. At an intermediate point, if appropriate.

5.8.11. Exploration Depth. Minimum exploration depths have some common criteria and will also vary by wall type. These minimums should be applied within the context of Table 5.1 to determine the site information category.

5.8.11.1. At a minimum, borings should extend to the deeper of the two depths described below. Explorations should extend through all soft clay layers to competent material and to the greater of:

5.8.11.1.1. A depth in excess of three times the total height of protection above the original ground. This height includes the levee height, if present.

5.8.11.1.2. Five times the exposed wall height.

5.8.11.2. Soil and Rock-Founded Concrete Walls. The minimum depths of investigations must be greater than 1.5 times the base width below the wall. This is in addition to the previously mentioned requirements in this section.

5.8.11.3. Walls with Deep Foundations. Investigations need to extend to 20 ft. (6 m) below the tip of the longest pile expected. If bedrock or till is present, minimum depths need to extend to 10 ft. (3 m) into a bedrock or till layer. This is in addition to the previously mentioned requirements in this section.

5.8.11.4. Exploration must be deep enough to characterize seepage conditions related to the wall. This exploration would include extending the investigations through permeable material (aquifer) to impervious material (aquiclude). When the aquifer is very deep (> 150 ft. (45 m)) at least one boring should be extended to an impermeable layer. If a historical boring where the impermeable layer has been verified is located within one mile (1.6 km) of the reach, it can be used to verify the depth of the aquiclude.

5.8.11.5. An approach or exit layer with high hydraulic conductivity which influences the wall performance may exist. In these cases, borings must extend deep enough to characterize layers leading to the layer with high hydraulic conductivity. Walls may include a seepage cutoff. If so, explorations should penetrate a minimum of 5 ft. (1.5 m) into the layer where the cutoff will terminate (aquiclude).

5.8.11.6. Cantilever Pile Walls, Passive Single Anchor Walls, and Post Tensioned Tieback Walls. For cantilever pile walls, passive single anchor walls, or post-tensioned tieback walls, there are no requirements in addition to those previously mentioned requirements in this section.

5.8.12. Vertical Frequency of Sampling Within an Investigation.

5.8.12.1. Samples will be necessary to confirm soil type as well as mechanical and hydrogeological parameters. Throughout the investigation depth requirements in 5.8.11. a through 5.8.11. c, sampling should be continuous in the upper 10 ft. (3 m) and continued at a maximum of 5-foot (1.5 m) intervals for greater depths. In soft to medium clays, undisturbed sampling should be performed. A minimum of one sample per investigation per geologic unit should be collected.

5.8.12.2. Sampling may produce disturbance that leads to unreliable laboratory test results. This is an issue mostly for sands, very soft clays, and hard clays. In situ testing may be more appropriate than sampling in these cases. Depths and locations of in situ test measurements are used within an investigation when assessing minimum sampling requirements. An in situ test measurement from a VST, CPT, DMT, or PMT can be considered as a sample.

5.9. Geotechnical Parameters for Static Analysis.

5.9.1. Water Flow Characteristics.

5.9.1.1. Water flow characteristics are quantified by the hydraulic conductivity (k_v or k_h) and the coefficient of consolidation (c_v or c_h). The subscripts account for vertical (v) and horizontal (h) flow paths. Hydraulic conductivity is used for analysis of steady-state seepage and calculation of exit gradients. Coefficient of consolidation is used for more advanced analyses including transient seepage and time rate of consolidation.

5.9.1.2. The relationship between hydraulic conductivity and the coefficient of consolidation varies with stress level and compressibility. For the case of vertical flow through overconsolidated soils:

$$c_v = \frac{k_v \cdot D}{\gamma_w} = \frac{k_v}{m_v \cdot \gamma_w} \approx \frac{k_v \cdot (1 + e_0) \cdot \sigma'_{v,avg}}{0.435 \cdot C_r \cdot \gamma_w} \qquad \text{(Equation 5.1)}$$

Where:

c_v = coefficient of consolidation

k_v = hydraulic conductivity

D = the constrained modulus = $\Delta\sigma'_v/\Delta\varepsilon_a$

γ_w = the unit weight of water

m_v = the vertical 1D coefficient of volume change = $\Delta\varepsilon_a/\Delta\sigma'_v$

C_r = the 1D recompression index (use C_c, the 1D compression index, for normally consolidated soils)

$\sigma'_{v,avg}$ = the average vertical stress over the increment of loading

e_0 = the in situ void ratio

5.9.1.3. A general relationship between soil type and water flow characteristics can be used as a starting point. An example is included in EM 1110-2-1901, Figure 2.5. Analysis requires use of more detailed relationships. Correlations to effective grain diameter (d_{10}) or d_{10} and void ratio are discussed in TM-3-424 (1956). Typical values of m_v based on soil type are available in Tracy et al. (2016). Overconsolidated soils will have an m_v value that is 5 to 10 times lower than an equivalent normally consolidated soil.

5.9.2. Strength. Strength is the maximum shear stress that a soil or rock can resist. Strength is typically characterized using a combination of in situ (SPT, CPT, VST) and laboratory (triaxial, direct shear) tests. A Mohr diagram of shear stress vs. effective normal stresses is typically used to evaluate strength.

5.9.3. Shear strength changes due to rate of loading and rate of water flow through a soil. There are two assumptions related to drainage conditions during loading. The first is that no drainage occurs in clay and silt layers. This situation is referred to as the undrained, short-term, or quick (Q) case. The second is that full steady-state seepage occurs in all soils. This situation is referred to as the drained, long-term, or slow (S) case. Analysis will be performed for one or both of these assumptions.

5.9.3.1. Bracketing analyses with a short-term and a long-term scenario must be performed for most sites. This assumes that strength is controlled by either drainage condition. In coarse-grained soils, strength is analyzed drained using S-case parameters for both the Q- and the S-case. For sites with only coarse-grained soils, only S-case analyses are needed. Earthquake loading is discussed in Chapter 17 and may require undrained Q-case analysis of coarse-grained soils.

5.9.3.2. Drainage may not occur when fine-grained soils are loaded because of fine-grained soils' low permeability. This is common particularly when flood events are short. When water is on a wall for a sufficient period of time, a condition from partial to full drainage may result. This is more likely when there are cracks and fissures in the soil, or sand layers and seams are continuous. This drainage causes changes in effective stress and strength.

5.9.3.3. The engineer should use the bracketed approach of Q- and S-cases. An exception is for fine-grained materials and flood events of a sufficiently short duration, such that no drainage occurs. However, even when founded on fine-grained materials, that material needs to be sufficiently thick and relatively homogeneous to prevent drainage during the flood event. Macro-level permeability is often controlled by features such as cracks, fissures, and thin, high permeability layers. These features influence the time needed to reach steady-state conditions after an increase in head. The hydraulic conductivity of these features characterized using laboratory samples of intact material may by underpredicted by an order of magnitude. Those limitations being considered, typical conditions that might not require an S-case analysis include the following:

5.9.3.3.1. Coastal floodwalls.

5.9.3.3.2. Walls founded on more than 30 feet of clay soils with a hydraulic conductivity less than approximately $1x10^{-8}$ ft/s ($5.5x10^{-7}$ cm/s)($m_v \approx 1.5x10^{-5}$/psf ($3x10^{-4}$/kPa), $c_v < 350$ ft^2/yr (32.5 m^2/yr)).

5.9.3.3.3. Walls loaded by a hurricane over a duration of less than two days.

5.9.3.4. Reconsolidated, or rapid (R) loading is the third case the engineer should consider. R-case analyses are a special example of the Q-case. In both cases, no drainage occurs in clay and silt layers during loading. For the R-case to occur, a second loading event (such as a flood) occurs after initial strength characterization and a primary loading event (such as construction). Soil strength has changed over that time period due to the primary loading event. This requires additional measurement and consideration for analysis. Selecting soil types and loading events where the R-case is appropriate are the same as those for the Q-case. However, the time between strength measurement and the loading event differs.

5.9.4. Interpretation of soil shear strength should align with conditions intended for their use. Both drained and undrained strength need to be assessed for clays and silts. Drained strength only needs to be characterized for sands and silty sands for load cases other than earthquakes. The following sections discuss characterization of undrained and drained strength.

5.9.5. Undrained Strength of Soils and Unconfined Compressive Strength of Rock.

5.9.5.1. For clays and silts, a total stress Mohr diagram can be plotted to assess the soils undrained strength (s_u). For saturated soils, changes in total stress from loading are essentially equal to changes in pore pressures before shearing. Increases in total confining stress do not result in an increase in strength. This situation occurs since consolidation and resulting increases in effective confining stress are assumed to not occur under the Q-case. Soil strength does not change as a function of applied total confining stress.

5.9.5.2. The Q-case is shown in Figure 5.1 for an undrained test on a soft, high-plasticity clay. For saturated soils, use the assumption that $\phi = 0°$ because strength does not change with confining stress. Typical undrained strength characteristics are included in Table 5.2

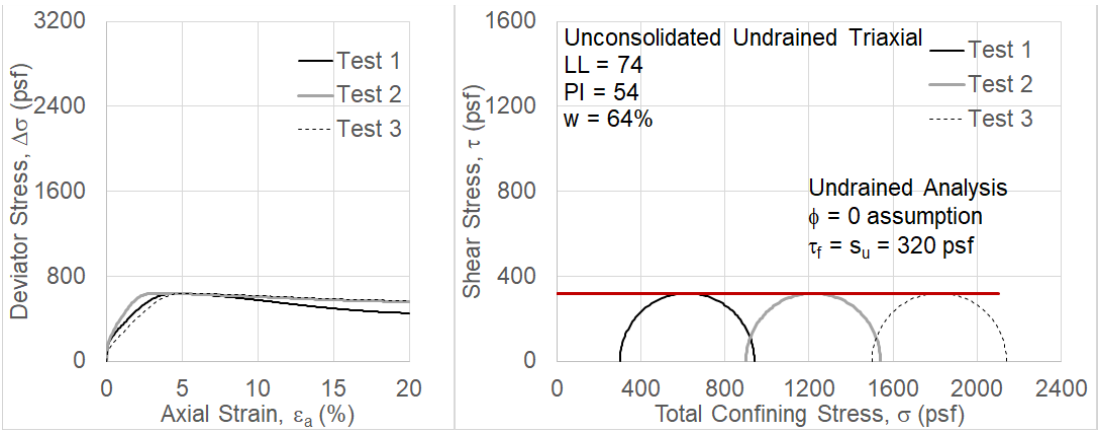

Figure 5.1. Evaluation of Undrained Strength from UU Triaxial Test
(See Appendix A for Metric Conversions)

Table 5.2
Typical Undrained Strength Characteristics of Clays (After Sowers & Sowers 1951)[a]

Consistency	s_u ,psf (kPa)	SPT N_{60}, blows/ft	CPT q_n[b,c], tsf (MPa)	Field Test
Very Soft	0 to 250 (0 to 12)	0 to 2	0 to 2 (0 to 0.2)	Squeezes between fingers when fist is closed
Soft	250 to 500 (12 to 24)	2 to 4	2 to 4 (0.2 to 0.4)	Easily molded by fingers
Medium	500 to 1,000 (24 to 48)	4 to 8	4 to 8 (0.4 to 0.8)	Molded by strong pressure with fingers
Stiff	1,000 to 2,000 (48 to 96)	8 to 15	8 to 15 (0.8 to 1.5)	Dented slightly by figure pressure
Very Stiff	2,000 to 4,000 (96 to 192)	15 to 30	15 to 30 (1.5 to 3.0)	Dented only slightly by pencil point
Hard	> 4,000 (192)	> 30	> 30 (3.0)	–

[a] Strength values in tables are not for use in design without additional verification, but to present the designer with general characteristics of the consistency of clays.

[b] Use q_n rather than q_t or q_c in CPT undrained strength correlations to avoid depth bias.

[c] tsf = tons per square foot.

5.9.5.3. Undrained strength of natural clays and silts is typically measured in the laboratory. See EM 1110-2-1913 for a detailed discussion of laboratory strength testing. It is common to extrapolate undrained strength to other locations across the site or to depths other than those tested. Uncertainty due to extrapolation can be reduced by using correlations between laboratory strength and other measurements.

5.9.5.4. The most reliable tool for undrained strength correlations in very soft to very stiff clays is the Piezocone Penetration Test (CPTU) or CPT. In stiff to hard clays, SPT N-values might also provide some indication of variability in strength. The VST is also applicable in very soft to medium clays and provides similar vertical resolution as the SPT.

5.9.5.5. The Unconsolidated Undrained (UU) triaxial test is the most common test for evaluation of undrained strength of clayey soils. The UU test is also known as the Q-test. For natural soils, tests should be performed on undisturbed samples. Three specimens from a sample are typically tested at three different (total) confining stresses. The strength should be constant for all three tests since the effective confining stress in the soil sample has not changed.

5.9.5.6. Typical confining stresses for UU tests are equal to σ'_{v0}, twice σ'_{v0}, and four times σ'_{v0}. Undrained strength from different specimens may increase with depth, but strength should still be modeled using the assumption that $\phi = 0^\circ$. Increasing strength with depth can be modeled using layers of different strength. It can also be modeled using special undrained strength functions available within many software programs.

5.9.5.7. Samples of fill material compacted in the laboratory or undisturbed samples from above the water table may be unsaturated. When soils are unsaturated, increases in total confining stress in a UU test compress air voids in the sample. Increasing the degree of saturation often leads to an increase in strength with confining stress until the specimen is saturated.

5.9.5.8. After confining stresses are high enough to result in saturation of the specimen, strength will be essentially constant. Observed variability in UU strength would be caused by natural variability or sample disturbance. Increasing strength with increased saturation due to changes in total stress should not be modeled using both c and ϕ. This is known as the "R" or "total stress" envelope. A total stress envelope with both c and ϕ can overpredict strength at higher stresses and should not be used. Additional discussion is provided is EM 1110-2-1902. Total stress tests should have $\phi = 0^\circ$ and constant undrained strength in saturated soils. If performing a single point UU test, the applied confining stress should mimic the field estimated overburden total stress.

5.9.5.9. The unconfined compression test (UC, ASTM D2166) provides an index of undrained shear strength (s_u). It is the simplest shear strength test to perform, and most applicable to relatively homogeneous clay-like materials. Due to the lack of confinement, a UC test can be sensitive to fissures and varved features. UC tests are also unsuitable for low-plasticity to non-plastic silts. Single point UU tests generally have little additional cost as compared to a UC test. UU tests should be considered as a replacement for UC tests when assigning laboratory strength tests.

5.9.5.10. The Consolidated Undrained (CU) test with pore pressure measurements is also known as the R-bar test. It is not common to use the CU test to evaluate in situ undrained strength
(Q-case) for USACE projects. When available, CU test results are typically used in the evaluation of drained effective stress (S-case) parameters. Like the UU test, three specimens are tested in a CU test at three different confining stresses. However, the specimen is allowed to consolidate or swell at each of the effective stresses.

5.9.5.11. Shear strength measured in CU tests will increases within increasing effective confining stress. This is similar to the R-case discussed in paragraph 5.9.3.4. The effective confining stress in an R-bar test must be representative of field conditions at the time of loading. Isotropic CU tests to estimate s_u should be performed at σ'_3 equal to the anticipated mean effective stress prior to undrained loading, $p'=\sigma'_{v0}\cdot(1+2\cdot K_0)/3$.

5.9.5.12. Evaluation of s_u from CUs needs to be corrected to the appropriate mode of shearing (compression, extension, or simple shear). There are uncertainties in mean effective stress and the effects of the mode of shearing on CU results. Use of undrained strength from CU tests requires field validation of strength at equivalent stress conditions. This can be performed through additional field monitoring or documented experience from similar projects, test fills, or test cuts.

5.9.5.13. Advanced strength tests may include undrained triaxial extension or direct simple shear. Results from these tests may be difficult to implement in design due to lack of experienced and qualified testing laboratories. Furthermore, historical levee and floodwall design has typically been based on results from UU tests. Thus, experience is inherently linked to the results of these tests. Advanced strength tests are recommended for high-cost and high-risk projects. Increased use will increase understanding of their results and application in design. This will benefit those projects as well as increase the engineers' experience with results of advanced tests.

5.9.5.14. Significantly different interpretations of soil strength may result from interpreting laboratory and in situ test data. It is possible the laboratory tests may have been performed on samples disturbed to a point where strengths are unreliable. Linking strength to stress history through normalized undrained shear strength profiles can be useful when checking design strength profiles. The normalized undrained strength ratio (s_u/σ'_{v0}) can be compared to the overconsolidation ratio (OCR) using approximate relationships (see Ladd 1991, Mayne et al., 2009):

$$\frac{s_u}{\sigma'_{v0}} \approx \left(\frac{sin\phi'}{2}\right) \cdot OCR^{(1-C_r/C_c)} \approx S \cdot OCR^m \approx 0.25 \cdot OCR^{0.8} \qquad \text{(Equation 5.2)}$$

Where:

s_u = the undrained strength

σ'_{v0} = the in situ vertical effective stress

ϕ' = the fully softened or critical state effective stress friction angle

OCR = p'_c/σ'_{v0} = the overconsolidation ratio

p'_c = the preconsolidation stress, or the maximum vertical effective stress the soil has previously experienced

C_r = the recompression coefficient from an oedometer test

C_c = the compression coefficient from an oedometer test

S = a fitting coefficient (Ladd 1991)

m = a fitting coefficient (Ladd 1991)

5.9.5.15. It is common to assess the strength of rock using total stress through the unconfined compressive strength (UCS = q_u). The shear stress at failure is taken as half the UCS (τ_f = UCS/2). The relationship between UCS and rock description are given in Table 5.3. Sliding resistance of gravity T-walls is controlled by interface strength, which is discussed in Chapter 6. For fractured and jointed rock, an effective stress Mohr-Coulomb analysis is necessary. Rock strength and application to foundation design are discussed in detail in EM 1110-1-2908.

Table 5.3
Description of Rock Based on UCS (After Sabatini et al., 2002)

Range of UCS (q_u), tsf (MPa)	Description	Field Identification
2.5 to 10 (0.25 to 1.0)	Extremely Weak	Indented by thumbnail.
10 to 50 (1.0 to 5.0)	Very Weak	Crumbles under firm blow with point of geologic hammer; can be peeled by a pocketknife.
50 to 250 (5.0 to 25.0)	Weak	Can be peeled by a pocketknife with difficulty; shallow indentations made by firm blow with point of geologic hammer.
250 to 500 (25.0 to 50.0)	Medium Strong	Cannot be scraped or peeled with a pocketknife; specimen can be fractured with a single firm blow of geologic hammer.
500 to 1,000 (50.0 to 100)	Strong	Specimen requires more than one blow of geologic hammer to cause fracture.
1,000 to 2,500 (100 to 250)	Very Strong	Specimen requires many blows of geologic hammer to cause fracture.

Range of UCS (q_u), tsf (MPa)	Description	Field Identification
> 2,500 (250)	Extremely Strong	Specimen can only be chipped with geologic hammer.

5.9.6. Drained Strength of Soil and Rock.

5.9.6.1. For the slow loading case (S-case) all construction and loading-induced pore pressures have dissipated at the time of the analysis. This occurs for slow loading of low hydraulic conductivity soils (clays and some silts). All static loading cases for high hydraulic conductivity soils (sands, silty sands, and gravels) are drained.

5.9.6.2. When pore pressures have dissipated, effective stresses can accurately be evaluated and drained strength parameters are appropriate for analysis. A Mohr diagram of shear stress versus effective normal stress is used to assess soil friction angle. For cases of sands and normally consolidated clays, it is common to assume there is no effective cohesion. Increases in strength are proportional to increases in effective stress on the failure plane through the friction angle, ϕ':

$$\tau_f = \sigma_n' \cdot \tan(\phi') \qquad \text{(Equation 5.3)}$$

Where:

τ_f = the shear stress at failure

σ'_n = the effective normal stress on the failure plane

ϕ' = the effective stress friction angle

5.9.6.3. Peak friction angle for sand increases with relative density. At a constant relative density, friction angle decreases with increased effective normal stress (see Andersen & Schjetne 2013). It is not possible to collect nominally undisturbed samples of sand in a cost-effective manner. It is uncommon to perform laboratory tests that can be used to verify correlations between penetration resistance and friction angle in sands. For design purposes, it is recommended to use typical S-case parameters for the peak strength of silica sands from Table 5.4.

Table 5.4
Typical Relative Density and Strength Characteristics of Silica Sands (c' = 0)

Density Class	Relative Density (%)	SPT N_{60}[a] (blows/ft)	CPT q_t[a], (tsf)[c]	Design Friction Angle[b], ϕ'_{pk} (deg)
Very Loose	< 20	< 4	10 to 25	28
Loose	20 – 40	4 – 10	25 to 60	30
Medium	40 – 60	10 – 30	60 to 180	32
Dense	60 – 80	30 – 50	180 to 300	34
Very Dense	> 80	> 50	> 300	36

[a] For depths of approximately 10 ft. (3 m) to 100 ft. (30 m) (depending upon water table depth), at constant relative density, N60 and qt increase with vertical effective stress.

[b] Design ϕ'_{pk} consistent with 1/3 – 2/3 rule for sub-rounded fine sands to silty fine sands. Angular sands, gravel, and rip-rap may have higher friction angles (after Schmertmann 1978).

[c] Multiply by 0.1 for MPa.

5.9.6.4. Peak, fully softened, or residual drained strength may be appropriate for assessing drained strength of clays for floodwall design.

5.9.6.5. For fully softened, or normally consolidated, friction angle, it is common to assume a decrease in ϕ' as plasticity index or liquid limit increases (Gamez & Stark 2014, Duncan et al., 2014, Castellanos et al., 2016). These assumptions can be conservative in some clays. It is recommended to measure the effective stress strength of clays when it is critical for design.

5.9.6.6. Effective stress parameters can be obtained from consolidated drained (CD) tests. CD tests are typically performed using direct shear. Also, consolidated undrained (CU) triaxial tests on saturated specimens with pore water pressure measurements (R-bar), can be used to evaluate drained effective stress friction angle. CU tests should be performed to an axial strain of 20 percent so that peak and larger displacement friction angles can be measured.

5.9.6.7. To assess global stability in areas with existing slip planes, the residual effective stress friction angle may be needed. Repeated direct shear tests or Bromhead ring shear tests should be used to measure residual strengths if needed in design.

5.9.6.8. In some cases, peak strength may be appropriate for use in design. Peak friction angle of soils and intact rock decrease with increasing effective normal stress on the failure plane. This leads to a curved failure envelope (see Duncan et al., 2014, Sabatini et al., 2002). Some intact rock and low plasticity index compacted and overconsolidated clays are not expected to soften over time. For these soils, a linear fit that incorporates both effective stress cohesion (c') and friction (ϕ') may be appropriate in design.

$$\tau_f = c' + \sigma_n' \cdot \tan(\phi') \quad \text{(Equation 5.4)}$$

Where:

c' = the effective stress cohesion intercept

Other parameters are defined in relation to Equation 5.3.

5.9.6.9. The values of c' and ϕ' are not physical properties but coefficients in a simplified design model. They should only be applied over the stress range at which they are measured. Use of an effective cohesion intercept will overpredict strength at low effective stresses. Fitting data using ϕ' without c' can overpredict strength at high effective stresses. Effective normal stresses resulting from analysis of wall failure modes need to be assessed. These stresses should be compared to the range of stresses where strength has been measured in the laboratory.

5.9.7. Volume Change (Compression/Consolidation).

5.9.7.1. Accounting for volume change is necessary in design of floodwalls (such as on newly constructed or recently raised levees). Compression and consolidation parameters and methods for settlement calculation are presented in EM 1110-1-1904. Calculations of vertical settlement for a given layer thickness requires vertical profiles of:

5.9.7.1.1. In situ void ratio, e_0;

5.9.7.1.2. Preconsolidation stress, p'_c, or overconsolidation ratio ($OCR=p'_c/\sigma'_{v0}$);

5.9.7.1.3. Compression, C_c, and recompression, C_r, indices; and

5.9.7.1.4. Effective stress changes ($\Delta\sigma'_v$) under a wall or associated embankment.

5.9.7.2. Volume change parameters are typically assessed from laboratory oedometer tests on critical layers. Compressibility parameters are also extrapolated to other layers using correlations to index parameters (for C_c and C_r). For preconsolidation stress and OCR, results from in situ tests or strength profiles are used in correlations. The recompression index (C_r) is typically estimated as a fraction of the compression index verified through laboratory tests. It is common to divide C_c by 5 to 10 to get C_r.

5.10. Geotechnical Parameters for Earthquake Loading.

5.10.1. For assessment of earthquake induced accelerations and resulting loading on structures, seismic site classification is needed. If earthquake loading is significant, assessment should include the potential for the following:

5.10.1.1. Cyclic cracking.

5.10.1.2. Softening.

5.10.1.3. Liquefaction.

5.10.1.4. Post-liquefaction undrained strength and settlement.

5.10.2. This section addresses seismic site classification, and Chapter 17 addresses earthquakes effects on soil response and failure modes.

5.10.3. Peak ground accelerations are typically available for rock or very dense soil sites. Peak ground acceleration for a soil site may differ from those for a rock or very dense soil site. The differences are linked to thickness of deposits and average stiffness of the soils. Seismic site classes are presented in Table 5.5. Average stiffness is based on the shear wave velocity averaged over the upper 100 ft. (30 m) of a soil deposit ($\overline{V_s}$). Shear wave velocity is an analogy for the small strain shear modulus, $G_0 = \rho \cdot V_s^2$, where ρ is the mass density. Shear wave velocity is used because it can be directly measured through the following seismic methods:

5.10.3.1. Spectral Analysis of Surface Waves (SASW).

5.10.3.2. Multichannel Analysis of Surface Waves (MASW).

5.10.3.3. Downhole testing.

5.10.3.4. Seismic cone penetration testing.

5.10.3.5. Crosshole testing (CHT).

5.10.4. Shear wave velocity can also be correlated to SPT blow count, undrained strength, or CPT cone tip resistance.

Table 5.5
Seismic Site Classification (Table 20.3-1 of ASCE 7-16)

Site Class	$\overline{V_s}$	$\overline{N}$ or $\overline{N}_{ch}$	$\overline{s_u}$
A. Hard Rock	> 5,000 ft/s (1,520 m/s)	NA	NA
B. Rock	2,500 to 5,000 ft/s (760 to 1,520 m/s)	NA	NA
C. Very dense soil and soft rock	1,200 to 2,500 ft/s (370 to 760 m/s)	> 50	> 2,000 psf (96 kPa)
D. Stiff Soil	600 to 1,200 ft/s (185 to 370 m/s)	15 to 50	1,000 to 2,000 psf (48 to 96 kPa)
E. Soft clay soil	< 600 ft/s (185 m/s)	< 15	< 1,000 psf (48 kPa)

Site Class	$\overline{V_s}$	$\overline{N}$ or $\overline{N}_{ch}$	$\overline{s_u}$
	Any profile with more than 10 ft. (3 m) of soil having the following characteristics: - Plasticity Index > 20, - Moisture content w ≥ 40%, and - Undrained shear strength $\overline{s_u}$ < 500 psf (24 kPa).		
F. Site response analysis required	See section 20.3.1 of ASCE 7-16. - Soils vulnerable to failure and collapse. - Peats and organic clays. - Thick (> 25 ft. (7.5 m)), high PI (> 75) clays. - Very thick (> 120 ft. (37 m) soft/medium ($\overline{s_u}$ < 1,000 psf (48 kPA)) clays.		
$\overline{V_s}$ = average shear wave velocity as described in ASCE 7-16 20.4.1. $\overline{N}$ or $\overline{N}_{ch}$ = average SPT blow count as described in ASCE 7-16 20.4.2. $\overline{s_u}$ = average undrained shear strength as described in ASCE 7-16 20.4.3.			

5.11. Selection of Design Soil Parameters.

5.11.1. The process of selecting design soil properties needs to account for uncertainty in materials and measurement. This assessment must also include the sensitivity of results to variation in those properties. Factors of safety related to deterministic design and evaluation are linked to conservative properties.

5.11.2. Analysis of the performance modes in Chapters 7 through 11 is deterministic. An engineer applies judgment to the selection of parameters. The following factors are included in this judgment:

5.11.2.1. Selection of operational strength and stiffness.

5.11.2.2. Sampling and testing methods.

5.11.2.3. Method of analysis.

5.11.3. Applying very conservative soil parameters in conjunction with typical factors of safety can lead to an overly expensive design. If material properties are unconservative, the result may be unacceptably low reliability or performance that does not meet the requirements of Chapter 4.

5.11.4. The factors of safety presented for design of walls in this manual are based on an inherent conservative bias, which accounts for uncertainty in that property. A commonly used method for evaluating profiles with a conservative bias is often referred to as the 1/3 – 2/3 rule. A mechanical parameter is selected so that roughly 1/3 of the data points are lower than the design parameter and 2/3 are higher. For aquifer hydraulic conductivity used in seepage analysis and well design, roughly 1/3 of the appropriate data points are higher than the design hydraulic conductivity value and 2/3 are lower. An example with the use of the 1/3 – 2/3 rule is included in Appendix D.

5.11.5. Uncertainties in design parameters result from natural spatial variability, measurement, and model error. Validated testing laboratories (ER 1110-1-8100) with appropriated quality assurance (ER 1110-1-261) should be used. This should be coupled with in-house quality control procedures of test results. Measurement error is then minimized to a point where natural spatial variability tends to dominate uncertainty evaluated using the 1/3 – 2/3 rule.

5.11.6. Strategies are needed to assess uncertainty due to natural spatial variability in a cost-effective manner. Properly calibrated correlations can be used to reduce uncertainty during extrapolation. A properly calibrated correlation starts with performance laboratory testing results on undisturbed samples within a given geologic unit. A performance test may be a strength test or consolidation test. The performance test is linked to an index test, such as water content, Atterberg limits, or an in situ test results. The parameters are applied to other areas of a site in the same geologic unit through measured index test results.

5.11.7. Correlations using less costly index tests to assess mechanical parameters should be used where appropriate. However, correlations are often limited to specific regional areas, soil types, and geologic formations. Statistical evaluation of trends and coefficient of variation is limited to the dataset used in calibration. A properly calibrated correlation is generally considered valid within an individual soil layer or geological unit.

5.11.8. If properties assessed from correlations are critical parameters for design, the properties should be verified. Verification may include laboratory testing for strength and compressibility, or field pump tests in the case of macro-permeability. For assessment of peak friction angle in sands and silty sands, values from Table 5.4 are recommended. Friction angle in sands cannot be verified since nominally undisturbed sampling and laboratory testing are impractical for typical projects. Table 5.4 is applicable for bearing, global stability, rotational stability, and sliding calculations related to floodwalls and retaining structures. Sliding assessment also requires a wall base interface friction coefficient, which is discussed in section 6.7.5.

5.11.9. Index tests in certain areas may indicate low strength or high hydraulic conductivity based on correlations. These areas may need to be broken out in design using a separate reach, rather than grouped with layers having average soil properties. If these areas are influencing design costs, they should be investigated further. This may require additional laboratory testing, geologic investigation, or instrumentation such as piezometers. These investigations may assess whether the apparently outlying test results are related to a particular geologic feature or seepage condition. Alternatively, the differences may have resulted from variability in the applied correlation.

5.11.10. The level of effort needed to assess a layer and soil parameter will relate to the importance in design. The importance of a property or layer within a design can be assessed using sensitivity analyses. A sensitivity analysis involves changing a soil parameter in a calculation within the range of expected values. How the factor of safety changes with the change in parameter is quantified to assess the parameter importance. Parameters and layers with the greatest influence on factor of safety require the most measurements during characterization.

5.12. Environmental.

5.12.1. Site information includes environmental assessment. Guidance in ER 1105-2-100 (Appendix C) and EM 1110-2-1205 discuss environmental assessment. These assessments include environmental, ecological, cultural, aesthetic, water quality, and air quality. Hazardous, toxic, and radioactive waste (HTRW) potential should be assessed for potential environmental hazard, such as the following:

5.12.1.1. Former landfills.

5.12.1.2. Surface impoundments.

5.12.1.3. Mining activity.

5.12.1.4. Industrial sites.

5.12.1.5. Signs of underground storage tanks.

5.12.1.6. Distressed vegetation.

5.12.2. If HTRW may exist at a site, the spatial distribution of chemical contaminants, composition, and concentrations need to be characterized and compared to regulatory limits. Similar drilling and sampling techniques as to those discussed in section 5.7 should be employed; however, different sample storage and testing requirements are necessary. Cuttings must be properly disposed, and equipment often needs to be cleaned if contacting contaminated soils. See EM 1110-1-4000.

5.12.3. Corrosion. Minerals within the soil may be transported by groundwater and cause adverse reactions to floodwalls. Examples include corrosion of metals or sulfate attack of concrete. Corrosion testing includes measurement of pH (ASTM D4972) and electrical conductivity (EC) (ASTM D1125). Measurement of water soluble ions such in soil or water samples may be necessary for concrete structures. Typical tests assess chloride (CL^-) (AASHTO T-291) and sulfate (SO_4^{-2}) (AASHTO T-290).

5.13. Mandatory Requirements.

5.13.1. Boring and sampling must conform to minimum requirements in Table 5.1.

5.13.2. Selection of design soil properties must account for inherent variability of the subsurface through use of a conservative estimate of properties that is commensurate with the level of uncertainty in the value of the property. The 1/3 – 2/3 rule, discussed in section 5.11, is one such method for selecting a design profile that meets these requirements.

5.13.3. For saturated low hydraulic conductivity soils (clays and some silts), undrained strength ($\tau_f = s_u$, $\phi=0$) must be characterized for Q- or R-case analyses.

5.13.4. For all soils, drained effective stress strength (S-case) parameters must be characterized.

5.13.5. A bracketed analysis of the Q-case and S-case must be performed when assessing all performance modes. The exception is the case of fine-grained materials and flood events of a sufficiently short duration that drainage does not occur. Only the Q-case is assessed for this condition.

Chapter 6
System Loads

6.1. Introduction.

6.1.1. General. Loads are selected to satisfy the design requirements described in Chapter 4. Proper selection of loads is required to ensure that walls efficiently provide adequate performance and very low probability of failure. This chapter describes the loads applied to walls for analysis and design. It provides basic information on load categories, descriptions of loads, and description of load combinations.

6.1.2. Serviceability and Strength Load Cases. As described in section 4.4.1, walls are designed for serviceability and strength limit states. Loads are selected differently for these states. For serviceability, load cases are selected to meet the performance requirements of the limit states. Examples of serviceability limit states are deflection, settlement, and cracking. For strength limit states, minimum design requirements are intended to provide adequate reliability against exceeding the limit state. The selection of the design loads along with the applied safety factors or the load and resistance factors combine to determine the reliability.

6.2. Typical Loads by Wall Type.

6.2.1. Floodwalls.

6.2.1.1. The principal function of a floodwall is to reduce the risk of flooding (inundation) of adjacent land. The two principal types of floodwalls are inland and coastal. Inland floodwalls typically are installed along a riverbank and are subjected to hydrostatic load events for periods of hours to weeks (long-term loadings) depending on the characteristics of the watershed. Wind-driven wave events may occur independently of high-water events. Coastal floodwalls are primarily subject to loadings in which wind gust, astronomical high tide, and storm surge from hurricanes occur concurrently with waves in events lasting up to a day.

6.2.1.2. Floodwalls may also be subject to ice, debris, and vessel impact loadings. They may be subject to earthquakes, but earthquakes rarely affect the design because the likelihood of simultaneous loading by an earthquake and a flood load is very small.

6.2.2. Earth Retaining Walls. An earth retaining wall primarily retains soil, although there may also be significant water forces. Loads are from soil, surcharges, and differential hydrostatic pressure from water above or below the ground. Earthquake loads may also affect earth retaining walls. Earthquakes occur simultaneous with the permanent earth pressures.

6.2.3. Dam Walls. Dam walls form part of the permanent damming surface. They may be subject to hydrostatic, wave, debris and ice impact, vessel impact, and thermal ice expansion. Dam walls may also be subject to earthquake loads. The primary distinction between dam walls and floodwalls is that hydrostatic loads are usually permanent loads on dam walls. Earthquake load cases should consider permanent water pressures that would occur simultaneously.

6.2.4. Dam Crest Walls. Crest walls raise the height of earth dams to prevent wave overtopping. Crest walls are subject to splash, run-up, or wave pressures that may occur during the high-water stages. Typically, the high pool, high wind/wave events, or earthquake events are independent of each other. Crest walls should not be used to provide a barrier surface for the permanent static pool. However, the engineer should consider the potential for this condition in design and evaluation. Because of their location, dam crest walls have special design requirements provided in paragraph 4.4.3.4.

6.2.5. Seawalls. Seawalls primarily resist wave loads but may also retain soil and/or withstand hydrostatic loads. See EM 1110-2-1614 for more information.

6.3. Load Categories and Load Selection.

6.3.1. Loads are categorized for the purposes of developing performance requirements and selecting loads for load combinations. Basic categories are based on duration and probability.

6.3.2. Load Duration. Loads on structures vary with time. This affects how the loads are combined in load case combinations. The following categories group loads based on the duration:

6.3.2.1. Permanent loads (Lp) are continuous loads such as dead load, lateral earth pressure, or a normal water level.

6.3.2.2. Temporary (intermittent static) loads (Lt) are loads with durations from several minutes to several weeks, such as flood loads, maintenance dewatering, operation live loads, and construction loads.

6.3.2.3. Dynamic loads (Ld) are pulse loads such as vessel and ice impact, earthquake, wave, and turbulent water flow. The structural response of walls to these loads may be dynamic. But the wall is usually designed assuming a static response, except for earthquake loads. Because of the short duration, it is extremely unlikely that more than one dynamic load exists at a significant level at a given time.

6.3.3. Probability of Loading. Loads can be separated into categories based on their probability of occurrence. Loads with less probability of occurrence can have lower safety factors to achieve the same reliability and have different performance requirements. USACE uses the categories of usual, unusual, and extreme. The expected performance requirements of these categories are described in Chapter 4. The probability of loading associated with the usual, unusual, and extreme load categories are described below and illustrated in Figure 6.1.

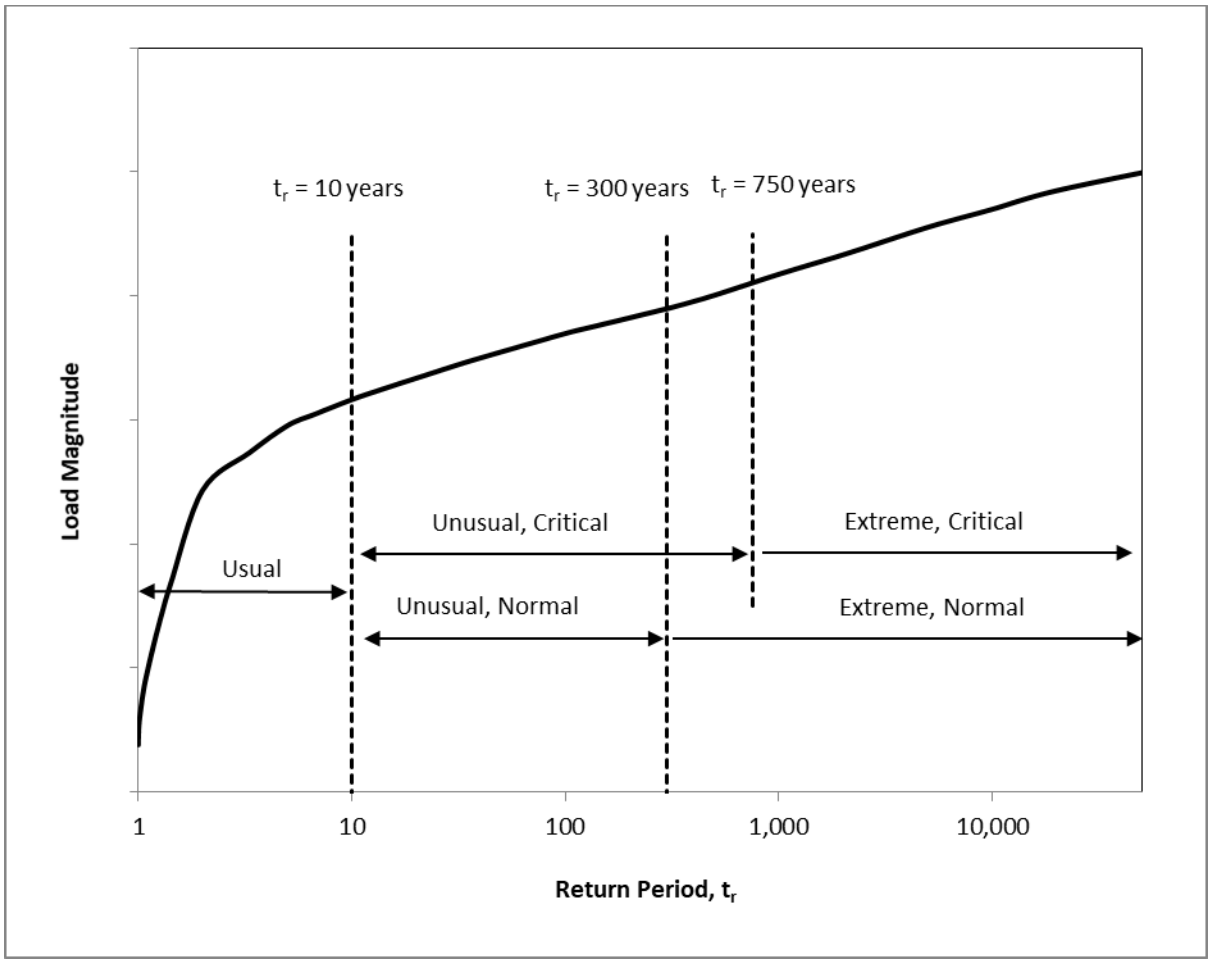

Figure 6.1. Load Category Versus Return Period

6.3.3.1. Usual (U). Usual loads are normal or routine operational events that are expected to have a return period (or recurrence interval) of less than or equal to 10 years (Annual Exceedance Probability (AEP) of 0.1).

6.3.3.2. Unusual (N). Unusual loads are infrequent operational events that are expected to have a return period of greater than 10 years (AEP of 0.1) and less than or equal to 750 years (AEP of 0.0013) for critical structures and of less than or equal to 300 years (AEP of 0.0033) for normal structures. These events are likely to be experienced over the service life of the structure. Construction or maintenance events may be treated as unusual load cases if the associated risks can be controlled by specifying the schedule, sequence, and short duration of the activities.

6.3.3.3. Extreme (X). Extreme loads are rare events defined to have a return period of greater than 750 years (AEP of 0.0013) for critical structures and of greater than 300 years (AEP of 0.0033) for normal structures. These events are possible but not likely over the service life of a structure.

6.3.4. Load Combinations. A load used in combination with other loads can be defined as a principal load or companion load. The maximum combined load occurs when one load, the principal action, is at its extreme value. Meanwhile the other loads (companion actions) are at the values expected while the principal action is at its extreme value. Definitions are:

6.3.4.1. Principal Load. The principal load is the specified variable load or rare load that dominates in a given load combination. Selection of principal loads is described in section 6.3.5 for strength design. For serviceability design, the principal load is selected to satisfy operational requirements and is normally a usual or unusual load.

6.3.4.2. Companion Load. The companion load is a specified variable load that accompanies the principal load in a given load combination. Companion loads are typically usual loads. Selection of companion loads is described in section 6.3.6.

6.3.5. Principal Load Selection for Strength Design. Principal loads for strength design are selected with the intent to provide very low probability of failure. Normally these dominant loads fall in the extreme category, but sometimes the maximum loads possible on a structure are unusual or usual. Three principal load conditions are used to define loads found on hydraulic structures except when defined in other industry standards, as described in the load description sections below, or for earthquake.

6.3.5.1. Principal Load Condition 1. The geometry of the structure or other physical factors do not limit the maximum loading on the wall. The wall therefore will experience any load possible. The return period of the principal load can be estimated. An example is wave loads where the annual exceedance probability of winds that generate the waves can be derived from local data. Nominal loads for design are based on return periods that provide very low probability of exceedance. Minimum return periods for selection of nominal loads are shown below. Earthquake loads fall under this category but are defined in section 6.9 instead of the return periods below.

6.3.5.1.1. Normal Structures, Return Period = 3,000 years

6.3.5.1.2. Critical Structures, Return Period = 10,000 years

6.3.5.2. Principal Load Condition 2. The geometry of the structure or other physical factors limit the maximum loading on the wall. The return period of the maximum load can be estimated. This applies to most hydrostatic loads. An example is a floodwall where the maximum hydrostatic loading from differential head is limited by the wall height. The return period of the maximum possible loading may be anywhere in the Load Category vs. Return Period depicted in Figure 6.1

6.3.5.3. Principal Load Condition 3. The return period of the principal load is unknown. Examples are typically impact loads, thermal expansion of ice, operation loads, and many hydrodynamic loads. Loads used for strength design are those considered upper bound or maximum.

6.3.6. Companion Load Selection. For strength load combinations, temporary and dynamic companion loads must have a minimum return period of 10 years. This is the maximum return period for usual loads in section 6.3.3. When stage-duration water elevation data is available instead of stage-frequency, the water surface must have a maximum exceedance probability of 1 percent. The exception is when using loads defined by industry standards, or for earthquake, as described in the load description sections.

6.4. Load Types. Table 6.1 shows load types applied to floodwalls and hydraulic retaining walls and their variable names. The paragraphs that follow describe these loads in detail.

Table 6.1
Load Types

Load Type		Variable
Permanent Loads (Lp)	Dead	D
	Vertical Earth	EV
	Lateral Earth	EH
Temporary Loads (Lt)	Hydrostatic	Hs
	Thermal Expansion of Ice	IX
	Soil Surcharge	ES
	Live Load	L
	Vehicle Live Loads	V
Dynamic Loads (Ld)	Hydrodynamic (except earthquake)	Hd
	Wave	Hw
	Debris/Floating Ice Impact	IM
	Barge/Boat Impact	BI
	Wind	W
	Earthquake	EQ
	Hawser	HA

6.5. Gravity Loads.

6.5.1. Dead Load. Dead load (D) is from the weight of the structure. Nominal dead loads are calculated with the expected weight of the concrete and steel that comprise the wall. Dead loads are usual loads.

6.5.2. Vertical Earth. Vertical earth (EV) loads are from the weight of moist or buoyant soil on the structure. Water in the soil is included under hydrostatic load (Hs). The nominal earth load should be estimated with expected values of depth and unit weight. The effects of scour or sediment deposition should be included where applicable.

6.6. Hydrostatic and Groundwater.

6.6.1. General.

6.6.1.1. Hydrostatic and groundwater (Hs) loads include forces from water both above and below the ground line, weight of water above or in a structure (including weight of water within soil on a structure), seepage forces, and uplift. Hydrostatic loads may act as permanent loads, temporary loads, or a combination of both. This depends on the geometry of the structure, hydrologic characteristics of the water body, and operational procedures when control structures are present. The hydrostatic loads should be selected in coordination with the hydraulic engineer.

6.6.1.2. For load case combinations, Hs is a temporary load, even if the water level is mostly constant. A difference in water level on either side of the wall creates an unbalanced hydrostatic pressure. Unbalanced hydrostatic pressure is assumed to act along the entire depth of the wall, including below the ground surface where a gap exists, or where effective stress analyses are used. If there is water flow though the soil due to the unbalanced pressure, the water pressures in the soil include seepage effects. Seepage effects can be neglected if a hydrostatic condition without water flow exists.

6.6.2. Water Pressure Calculations.

6.6.2.1. The application of Bernoulli's principal to water forces in wall design requires the sum of pressure head, elevation head, and velocity head to equal the total head. The elevation head is the height of a point above an arbitrary datum. The velocity head is typically ignored because there is no flow perpendicular to the wall above the base and flow velocity through soil is low. When seepage exists, head loss through the soil is considered.

6.6.2.2. For hydrostatic conditions, total head is constant with depth so the pressure head at any point is the difference in elevation between the water surface and that point. The pressure head is the height water would rise in a piezometer placed at that point. Water pressure at any point is calculated by multiplying the pressure head by the unit weight of water (62.4 pcf (9.81 N/m^3) for clean fresh water).

6.6.2.3. As water has no shear strength, water pressures are equal in all directions (K = 1.0). Water pressures are added to effective earth pressures to obtain total earth pressures.

6.6.3. Gap/Crack Formation. For soils with cohesion, cracks in the soil or gaps between soil and structure should be included on the active side of the structure (gap) or structural wedge (crack) as shown in Figure 6.2. The hydrostatic pressure is present to the bottom of the crack or gap. The formation of the gap will also shorten the effective seepage path.

6.6.4. A crack or gap may be calculated when performing both short term, Q-case analyses, and long term, S-case analyses. Crack depth equations differ slightly depending upon the analysis type, and can be calculated as:

$$d_c = \frac{2s_{u,d}}{\gamma'} \text{ (Q-case)} \qquad \text{(Equation 6.1)}$$

$$d_c = \frac{2c'_d}{\gamma'\sqrt{K_A}} \text{ (S-case)} \qquad \text{(Equation 6.2)}$$

Where:

d_c = crack or gap depth

$s_{u,d}$ = developed soil undrained shear strength

c'_d = developed soil effective stress cohesion

γ' = buoyant unit weight of soil = saturated unit weight – unit weight of water

K_A = active lateral soil coefficient

6.6.5. Equation 6.1 has historically been the most common method to assess crack depth using total stress methods. However, numerical investigations have indicated that gap depth may propagate deeper when a head of water exists against a wall (Pace et al., 2012). Ebeling et al. (2018, Appendix B) presents a hydraulic fracturing analysis based on either total stresses or effective stresses. This should also be used when assessing crack depth. The crack and gap depth used should be the deeper of the total stress (Equation 6.1) and hydraulic fracturing-based assessments.

6.6.6. In addition to soil strength and effective unit weight, external factors may influence crack depth. Examples are animal burrows and surface erosion. These factors should be considered when evaluating crack and gap depths.

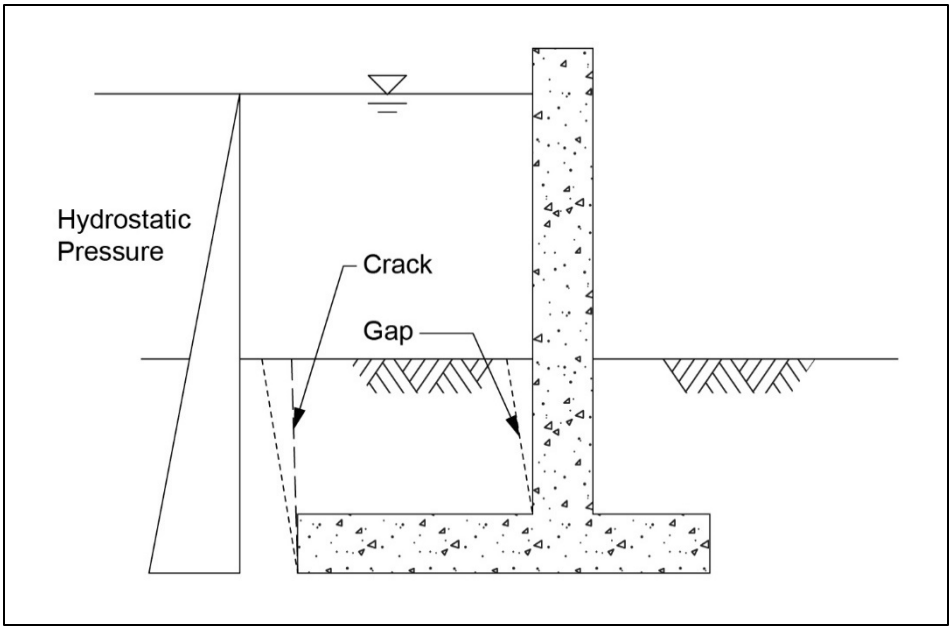

Figure 6.2. Hydrostatic Pressure with Crack in Undrained Cohesive Soils

6.6.7. Water Pressures Where Seepage Is Present.

6.6.7.1. Seepage conditions are dependent on the soil type and the duration of loading. For simplicity, soils are classified as coarse-grained or fine-grained in this manual. Coarse-grained materials, such as sands and gravels, are sufficiently pervious that excess pore pressures do not develop when shear stress conditions are changed. Steady-state seepage will always take place in these soils. Fine-grained soils subjected to stress changes develop excess (either positive or negative) pore pressures because their low permeability precludes an instantaneous water content change. Thus, their seepage behavior is time dependent due to their low permeability. Steady-state seepage will develop under long-term (drained) loading conditions.

6.6.7.2. If seepage does exist, the effects of seepage should be included in the computation of water pressure. The pressure head at points of interest is obtained from a seepage analysis. Such an analysis should consider the types of foundation and backfill materials, their possible range of horizontal and vertical permeabilities, boundary conditions, and the effectiveness of cutoffs and drains. Seepage analysis methods, including flow nets and numerical methods such as FEM, are discussed in section 6.6.9. The effect of cutoffs is covered in section 6.6.10 and the effect of drains is covered in section 6.6.11. An example of pressure calculations using a flow net is shown in Figure 6.3.

6.6.7.3. Water seeping under the wall can lead to loss of foundation soils and/or rock that supports the wall through a process called internal erosion. Internal erosion is defined in Chapter 3 as a common type of potential failure mode considered for walls and the evaluation of internal erosion is described in section 7.7.

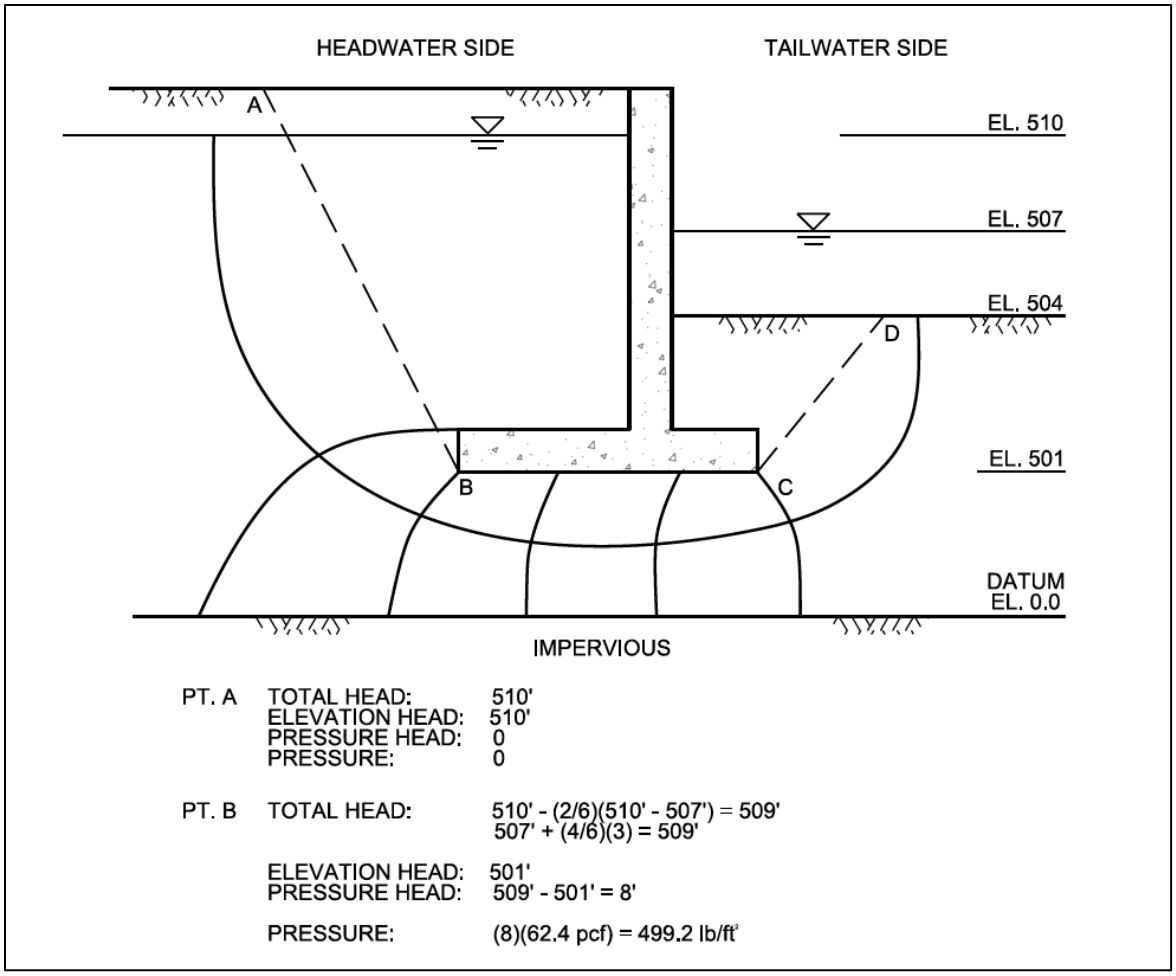

Figure 6.3. Water Pressures from Flow Net

6.6.8. Seepage Assumptions for Analysis and Design.

6.6.8.1. Analysis and design will be performed for one or both of the following assumptions for seepage:

6.6.8.1.1. No seepage exists.

6.6.8.1.2. Full steady-state seepage exists.

6.6.8.2. Bracketing analyses should be performed for most sites. This accounts for either assumption for seepage to occur. One exception is for sites with coarse-grained material where only steady-state seepage occurs. However, in low permeability fine-grained soils steady-state conditions may not develop, particularly when flood events are short. However, open seepage entrances, desiccation, cracks, and noncontinuity in blanket materials may allow steady-state conditions to occur more quickly than the measured permeability of the soil may indicate. Therefore, the bracketed approach should be used for sites with fine-grained material. The exception is for an event of sufficiently short duration that a case with no seepage can be confidently assumed (see section 5.9.3.3).

6.6.8.3. Transient Seepage Analysis. To aid in risk-informed evaluations, transient seepage may be used in parametric studies. Transient seepage analyses are a method of determining the amount of seepage that is present at a time after hydraulic loading. Although they are beginning to be applied for research and forensic studies (see Stark et al., 2014), transient seepage results are not yet reliable enough for routine design. Prior to performing a transient seepage analysis, the analyst should perform the benchmark validation exercises discussed by Tracy et al. (2016).

6.6.8.4. A parametric study can be used to link the two cases within a bracketed analysis. One case is with no seepage and the other with full steady-state seepage. Analysts would vary the duration that water was on the wall for a reasonable range of conditions associated with design event. They would also vary the coefficient of consolidation (function of hydraulic conductivity and soil compressibility) of soil layers within a reasonable range. Results can be used to inform design decisions.

6.6.9. Seepage Analysis Methods. Simplified methods, such as the line-of-creep method, may be used when soil conditions adjacent to and below a wall can be assumed homogeneous (or can be mathematically transformed into equivalent homogeneous conditions). Simplified methods are advantageous for preliminary studies to size wall elements or compare alternate wall designs. However, designers should ensure that the final design incorporates water pressures based on appropriate consideration of actual soil conditions. Methods and procedures for seepage analysis are described in the following paragraphs.

6.6.9.1. Seepage Analysis by Line-of-Creep Method.

6.6.9.1.1. Where soil conditions allow for the construction of a transformed 1-D flow problem, the line-of-creep (or line-of-seepage) method provides a reasonable, approximate method for estimating seepage and uplift pressures. It is particularly useful for preliminary or comparative designs.

6.6.9.1.2. The method is illustrated in Figure 6.4, assuming no cracks are present on the upstream side of the wall. The total heads at the ends of the base (points B and C) are estimated by assuming that the total head varies linearly along the shortest possible seepage path (A′BCD′) of length L. The head loss to B and C is found by computing the ratio of the seepage distance at each point to the total length of seepage, L, and multiplying this by the total head loss. Once the total head at B and C is known, the uplift pressures are calculated by subtracting the BC elevation head from the total head at each point and multiplying the resulting pressure head by the unit weight of water. The total uplift diagram along the failure surface is completed in a similar manner.

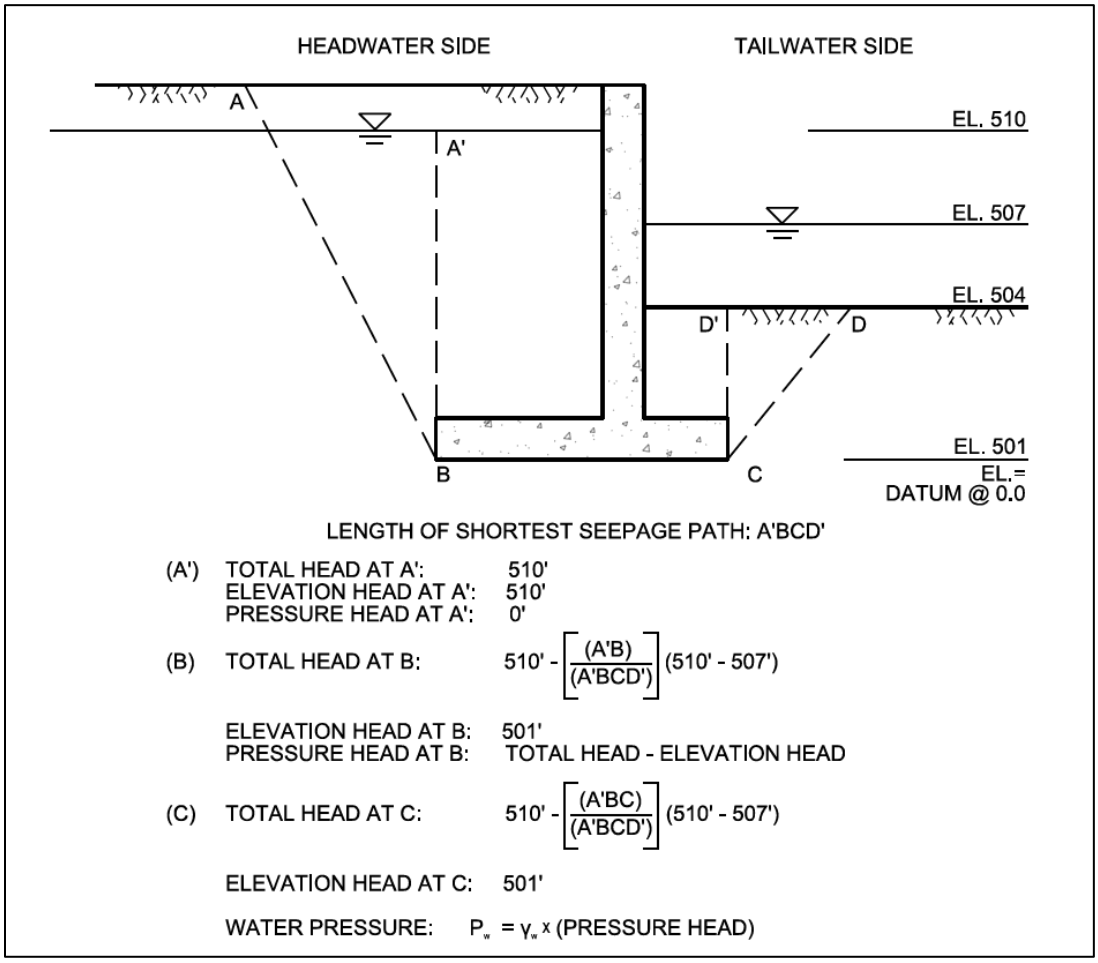

Figure 6.4. Water Pressures from Line-of-Creep applied to an Isotropic, Homogeneous Soil Regime

6.6.9.1.3. Often the horizontal coefficient of permeability is higher than the vertical coefficient. For this case with no seepage cutoff, the length of the seepage path is computed in a homogenous soil regime by adjusting the horizontal length (L_h = BC in Figure 6.4) by the ratio of the vertical (k_v) and horizontal (k_h) coefficients of permeability. This obtains an adjusted horizontal length (L_{ha}) for the calculation of seepage length as follows:

$$L_{ha} = \frac{k_v}{k_h} L_h \qquad \text{(Equation 6.3)}$$

Where:

L_{ha} = adjusted horizontal length accounting for non-uniform hydraulic conductivity

k_v/k_h = the ratio of vertical to horizontal hydraulic conductivity (typically less than one)

L_h = horizontal length of seepage (BC in Figure 6.4)

6.6.9.1.4. The line-of-creep tends to overestimate uplift pressure on the waterside of the base and underestimate uplift pressures on the landside of the base. This is because the method does not properly account for head loss outside the footprint of the structure. Therefore, there are cases where the method would compute water pressures that are lower than expected. Additionally, its application to walls with a partial seepage cutoff feature should be for preliminary evaluation only. In conclusion, design seepage and uplift pressures should be verified with analysis that is more rigorous.

6.6.9.2. Seepage Analysis by Method of Fragments. Another approximate method applicable to homogeneous soil conditions is the method of fragments. It is more accurate than the line-of-creep method. The soil is divided into a number of regions or fragments for which exact solutions of the seepage conditions exist. The head loss through each fragment is calculated by mathematically combining the assemblage of fragments. The method assumes that fragment boundaries are equipotential lines (contours of equal total head) and provides an exact solution where this assumption is true (I-walls and single sheet piles). This method is seldom used in the current practice because of the availability of advanced analysis tools.

6.6.9.3. Advanced Seepage Analysis. Advanced analysis tools, such as the finite element method or the finite difference method, can solve confined or unconfined seepage problems involving multiple soils with isotropic or anisotropic permeabilities and with variable boundaries and cutoffs. This is particularly useful for evaluating the effect of drains or cutoffs and analyzing walls with complicated foundation and backfill geometry. Advanced seepage analysis is described in detail in EM 1110-2-1901 and EM 1110-2-1913.

6.6.10. Hydrostatic Water Pressure for Walls with Cutoffs.

6.6.10.1. Vertical cutoffs below shallow-founded wall footings may be used to reduce uplift pressures or reduce the seepage gradient. The cutoff is usually located at the end of the wall footing on the waterside (heel). Cutoffs located at the end of the wall footing on the landside (toe) prevent the erosion of soil from beneath the wall, but they result in higher uplift beneath the wall.

6.6.10.2. A cutoff must penetrate approximately 95 percent or more of the pervious strata before significant reductions in the quantity of flow can be realized. However, partial cutoffs can be somewhat effective in reducing uplift pressures on the wall base. Deep cutoffs will often interfere with the normal exchange of groundwater between an aquifer and a river during non-flood periods. They should only be considered where detailed hydrogeologic studies have been made in this regard. The decision as to the type and depth of a cutoff should be based on an underseepage analysis considering actual site conditions.

6.6.10.3. The effectiveness of the cutoff is a function of the relative permeability of the cutoff to the surrounding soil. Steel sheet piling can be expected to allow some seepage through the interlocks. In coarse-grained stratum, the effectiveness of a properly interlocked steel sheet pile cutoff in reducing uplift can be assumed to be up to 50 percent. If the effectiveness of the steel sheet pile cutoff is assumed greater than 50 percent, it should be based on actual experience of similar conditions and justified accordingly.

6.6.10.4. A sheet pile cutoff is less effective in fine-grained material than in coarse-grained material. Cohesion may allow cracking and separation of the soil away from the sheet pile. Moreover, the permeability through the interlocks will be closer to the permeability of the soil than in coarse-grain soils. For these reasons, steel sheet piling should be considered ineffective as a cutoff in fine-grained soils.

6.6.10.5. Reinforced concrete cutoffs that are constructed contiguous with the rest of the wall can be considered to have an effectiveness equal to the rest of the wall. Concrete cutoffs constructed by other methods should be analyzed using advanced seepage analysis. Careful consideration should be made of the expected permeability of the cutoff wall to account for potential cracks and joints.

6.6.10.6. Seepage and Uplift for Walls with Cutoffs that Penetrate to an Impervious Soil Layer.

6.6.10.6.1. When the cutoff fully penetrates a pervious soil layer to a relatively impervious material, head loss occurs entirely across the cutoff when it is 100 percent effective. For design by line of creep with 50 percent effectiveness of the cutoff, the design uplift diagram (Figure 6.5) should be drawn with a pressure head at point B on the waterside of the cutoff equal to the full head of water (neglecting reduction in pressure due to head loss from seepage effects). The pressure head on the landside of the cutoff at point B should equal the pressure at point B reduced by 50 percent of the difference between the full head value on the waterside and the pressure head at the end of the toe of the wall. The pressure head at the toe of the wall can be computed based on the seepage path from the cutoff wall to the saturated level on the waterside.

6.6.10.6.2. Where soils are anisotropic, the length of the seepage path is adjusted by Equation 6.3 on the landside of the complete cutoff.

6.6.10.6.3. Advanced Seepage Analysis. A width of 1 ft. (0.3 m) is commonly used for these cutoff elements in the model. The permeability in the cutoff elements is then varied until uplift pressure immediately landside of the cutoff matches the assumed efficiency due to leakage. If this is 50 percent, the total head at the cutoff would be the midway between the total head waterside and the total head landside.

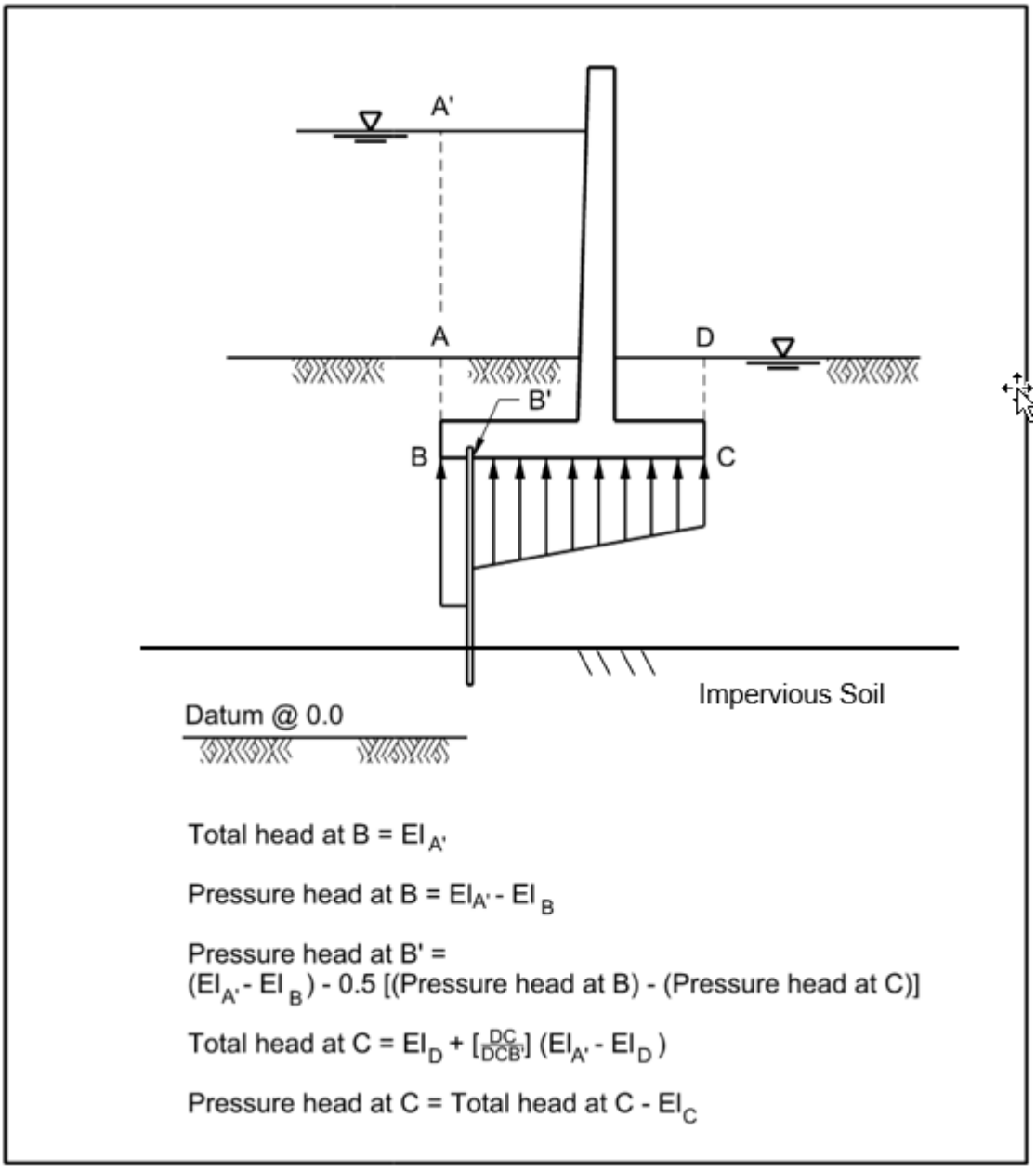

Figure 6.5. Uplift Pressures for a Wall with a Sheet Pile Cutoff That Penetrates to an Impervious Soil Layer

6.6.10.7. Seepage and Uplift for Walls with Cutoffs that do not Penetrate to an Impervious Soil Layer.

6.6.10.7.1. General. The depth of cutoff can be included as extra vertical length in the line-of-creep method. The depth of penetration is included twice, once for each side of the cutoff. When the cutoff effectiveness is assumed to be 50 percent, these creep lengths are calculated with the depth of penetration of the cutoff equal to half of the actual depth of penetration. As stated in paragraph 6.6.9.1.4, the application of the line of creep method to walls with a partial seepage cutoff feature should be for preliminary evaluation only.

6.6.10.7.2. Advanced Seepage Analysis. To account for leakage through sheeting with advanced seepage analysis, the sheet piling is modeled using the actual cutoff depth. The width and permeability of cutoff elements in the model are determined using the iterative procedure described in section 6.6.10.6 for a full cutoff. The procedure is as follows:

- In the scenario of a partially penetrating cutoff, an initial model with a fully penetrating cutoff is used to determine the permeability value of elements that matches the assumed leakage through sheeting.

- For homogeneous soils, the modeled cutoff should extend to the bottom of the pervious layer to determine the width and permeability of cutoff elements.

- For layered soils with a significant permeability contrast, it is more appropriate to use the actual depth of the cutoff and set the model boundary at the elevation of the bottom of the sheet pile to determine the permeability of cutoff elements.

- Once the width and permeability of cutoff have been determined using the initial model with a full cutoff, the actual depth of sheet piling and pervious layer are then included in the seepage model.

6.6.10.8. Seepage and Uplift for Walls with Deep Foundations.

6.6.10.8.1. Walls for hydraulic applications on deep foundations should always contain a cutoff. Settlement or erosion of soil under the wall footing can create a void and a path for seepage. Cutoff walls therefore must be incorporated to manage the seepage through the potential void, this is usually done with steel sheet piling.

6.6.10.8.2. The uplift conditions possible are variable and uncertain depending on whether or not a void under the footing forms, the effectiveness of the cutoffs for limiting water under and though them, and on the conductivity of the soils. For this reason, uplift pressures are bracketed assuming that the sheet piling is either effective (Figure 6.6a) or fully ineffective (Figure 6.6b) in reducing head.

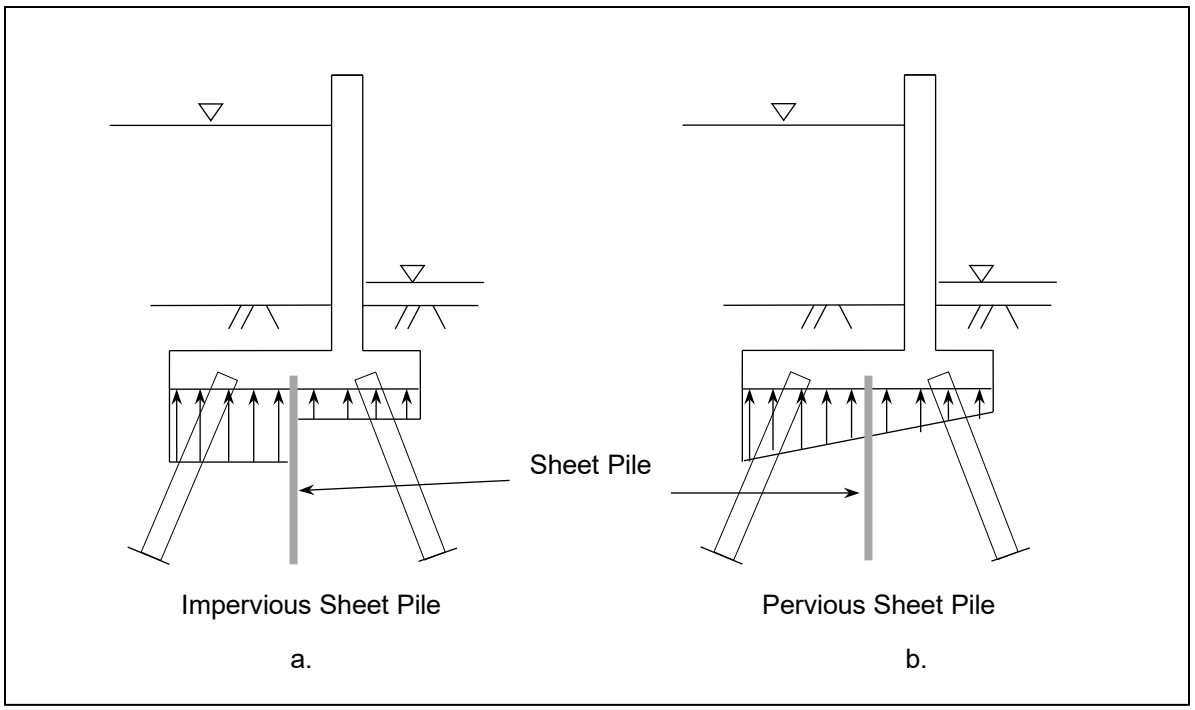

Figure 6.6. Bracketed Assumptions for Uplift Pressures for a Wall with a Deep Foundation

6.6.10.8.3. Calculation of seepage for computation of exit gradients for the internal erosion failure mode is performed as described in the previous paragraphs. Effects of potential voids under the footing are included in the analysis.

6.6.11. Hydrostatic Water Pressures for Specific Situations.

6.6.11.1. Horizontal Water Loads on Keys. For floodwalls on clay foundations, full water head will be conservatively assumed to act at the bottom of the key and the horizontal water load acting on the waterside face of the key will be computed on this basis. The seepage path will then be assumed to begin at the bottom of the key. The landside face of the key will normally be assumed to be in full contact with the earth-resisting movement of the wall.

6.6.11.2. Uplift Calculations for Walls on Rock Foundations.

6.6.11.2.1. Seepage beneath floodwalls founded on competent rock typically occurs in joints and fractures, not uniformly through pores as assumed for soils. Consequently, commonly used 2D analysis models employed for soil foundations that assume isotropy and homogeneity will generally be invalid.

6.6.11.2.2. Total head, uplift pressure, and seepage quantities may be highly dependent on the type, size, orientation, and continuity of joints and fractures in the rock. They may also be dependent on the type and degree of treatment afforded the rock foundation during construction. Since joints or fractures in the rock can be detrimental to underseepage control, the joints and fractures should be cleaned out and filled with grout before the concrete is placed, as discussed in section 13.2.

6.6.11.3. Seepage and Uplift Calculations at the Base of Shallow-Founded Walls. For shallow-founded walls, the seepage path length can be assumed from the length of the base that is in compression. Section 7.3.5 describes the uplift distribution acting on the base using the resultant location calculated in section 7.4. There is no total head loss across the base that is not in contact with soil or rock. Hence this portion is not included in seepage length calculations.

6.6.11.4. Seepage and Uplift for Walls with Drains. Drains may be used to reduce uplift pressures on walls or to reduce exit gradients. When included in the design, the drains may be assumed no more than 50 percent effective in reducing water pressure compared to the condition where they are not present. Design of drains is described in Chapter 12.

6.6.11.5. Hydrostatic Pressure on Stilling Basins and Spillways. Walls for stilling basins and spillways typically function primarily as earth retaining walls. The presence of supercritical flow may result in a hydrostatic differential between the ground water or tail water outside of the structure and the water surface inside the structure. In some cases, the configuration of the site may result in the stilling basin and/or spillway wall acting to retain water at levels that are above the ground outside of the structure. Uplift is determined from a seepage analysis of the site and may be greater than water pressures inside the structure.

6.6.12. Selection of Hydrostatic Loads.

6.6.12.1. For design of hydrostatic loads as the principal loads in a load combination, the design water levels must be the maximum hydrostatic loading caused by a differential head that is geometrically and hydrologically possible. The maximum hydrostatic loading may occur at water levels that are not necessarily the largest possible differential head.

6.6.12.2. The maximum hydrostatic loading may occur after water levels have exceeded the top of a structure before inundation on the opposite side reduces the differential. Usually, the maximum hydrostatic load is limited by the height of the wall, height of adjacent levees or spillways, and other factors. In some cases, hydrostatic loading may be experienced from differential head across a wall in either direction. Determination of the maximum hydrostatic loading conditions should be made in consultation with the project hydraulic engineers. The water levels at the maximum hydrostatic loading are typically extreme but may be unusual or usual loads as defined in section 6.3.3.

6.6.12.3. Serviceability checks may be performed for more frequent loading conditions, with hydrostatic loading less than the maximum. For these cases, the designer will select the water elevations, groundwater level, uplift, etc. of interest for design. The load categories are defined with return period according to section 6.3.3.

6.6.12.4. When Hs is the companion load, values used for design are selected according to section 6.3.6 (return period of 10 years). However, when combined with earthquake, Hs is the elevation that the water is expected to be at or below for half the time during each year.

6.6.12.5. When designing for hydrostatic loads due to the Probable Maximum Flood (PMF), the structural or geotechnical engineer should work with the hydraulic engineer to estimate a return period of the water level corresponding to the PMF.

6.6.12.6. For uncertain groundwater conditions in the extreme design case, where Hs is the principal load, the design water surface is determined with hydraulic and geotechnical engineers. It must be the ground water surface creating a maximum loading condition with extremely low probability of exceedance meeting the conditions in section 6.3.5. When insufficient probabilistic information is available, this is a level that creates a loading condition that can be considered an upper or lower bound of possible water elevations, whichever has the maximum effect, based on site geometry, soils information, and water sources.

6.6.12.7. Hydrostatic (and seepage) loads may be affected by the ground surface elevation. See paragraph 6.7.9 for discussion of the selection of ground elevation.

6.7. Lateral Earth Pressures and Compaction.

6.7.1. Lateral earth pressures and compaction (EH) is the moist or effective lateral earth pressures from in situ conditions or backfill. The earth pressures assumed to act on structures should be consistent with the expected movements of the structure system. Earth pressures are permanent loads and are usual loads when they are the primary load.

6.7.2. Earth pressures reflect the state of stress in the soil mass. The concept of an earth pressure coefficient (K) is often used to describe this state of stress. Earth pressure coefficients are used with effective stress for saturated soils, as shown in Equation 6.4. The earth pressure coefficient is defined as the ratio of effective horizontal stresses (σ'_h) to the effective vertical stresses (σ'_v) at any depth below the soil surface:

$$K = \frac{\sigma'_h}{\sigma'_v} \qquad \text{(Equation 6.4)}$$

Where:

K = an earth pressure coefficient

σ'_h = effective horizontal earth pressure

σ'_v = effective horizontal earth pressure

6.7.3. Earth pressures for a given soil-structure system may vary from an initial state of stress, referred to as at-rest (K_o), to minimum limit state, referred to as active (K_A), or to a maximum limit state, referred to as passive (K_P). The magnitude of the earth pressure exerted on the wall depends, among other effects, on the physical and strength properties of the soil, the interaction at the soil-structure interface, the groundwater conditions, and the deformations of the soil-structure system. These limit states are determined by the shear strength of the soil, which is described in 5.9.2 and takes the general form shown in Equation 6.5.

$$\tau_f = c' + \sigma'_n tan\varphi' \quad \text{(Equation 6.5)}$$

Where:

τ_f = shear stress on a failure plane

c' and φ' = effective stress shear strength parameters of the soil, cohesion, and angle of internal friction, respectively

σ'_n = effective stress normal to the shear plane

6.7.3.1. At-Rest Pressures. At-rest pressure refers to a state of stress where there is no lateral movement or strain in the soil mass. In this case, the lateral earth pressures are the pressures that existed in the ground prior to installation of a wall. This state of stress is shown in Figure 6.7 as circle O on a Mohr diagram.

6.7.3.2. Active Pressures. Active soil pressure is the minimum possible value of horizontal earth pressure at any depth. This pressure develops when the walls move or rotate away from the soil allowing the soil to expand horizontally in the direction of wall movement. The state of stress resulting in active pressures is shown in Figure 6.7 as circle A.

6.7.3.3. Passive Pressures. Passive (soil) pressure is the maximum possible horizontal pressure that can be developed at any depth from a wall moving or rotating toward the soil and tending to displace the soil horizontally. The state of stress resulting in passive pressures is shown in Figure 6.7 as circle P. In paragraph 5-3e of EM 1110-2-2100, resisting side earth pressure is computed by passive earth pressure equations using developed soil shear strength. For certain load cases, the resisting side force computed with a passive pressure coefficient may be higher than the driving side forces. In these cases, the engineer needs to adjust the resisting side forces to not exceed driving side forces and ensure that the wall is in static equilibrium.

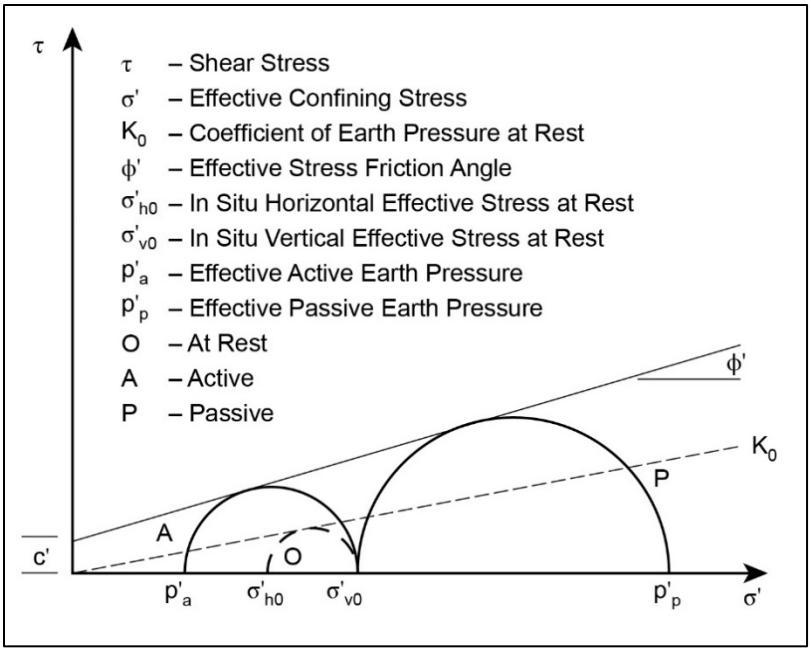

Figure 6.7. Definition of Active and Passive Earth Pressures

6.7.4. Effect of Wall Movements on Lateral Earth Pressure.

6.7.4.1. General. The movement of the wall system determines the lateral earth pressure that is applied to a wall. Lateral earth pressures on walls with no movement will be at-rest. With sufficient movement of the system, active earth pressures will be mobilized on the driving side of the wall and passive earth pressure on the resisting side of the wall. The amount of movement required to mobilize minimum active or maximum passive earth pressures depends on the stiffness of the soil and the height of the wall. This is illustrated in Figure 6.8. Much more movement is needed to develop maximum passive earth pressures than maximum active earth pressures.

6.7.4.2. For the procedures presented for analysis and design of the wall systems in Chapters 7 through 11, assumptions are made for movement of the system and corresponding soil pressures that are applied. Full numeric analysis presented in Chapter 16 enforces compatibility of deflection, soil pressures, and other forces acting on the wall system (such as anchors). It also provides a means to estimate both soil pressures and structural displacements.

6.7.4.3. Shallow-Founded Concrete Walls. Lateral earth pressures and forces for shallow-founded walls are computed according to Chapter 5 of EM 1110-2-2100. Hydraulic structures in USACE are intended to have very little movement for usual load cases and allow progressively more for the unusual and extreme cases. The developed soil strengths used in EM 1110-2-2100 are intended to produce lateral earth pressures that conform to this. Chapter 7 of this manual provides additional information.

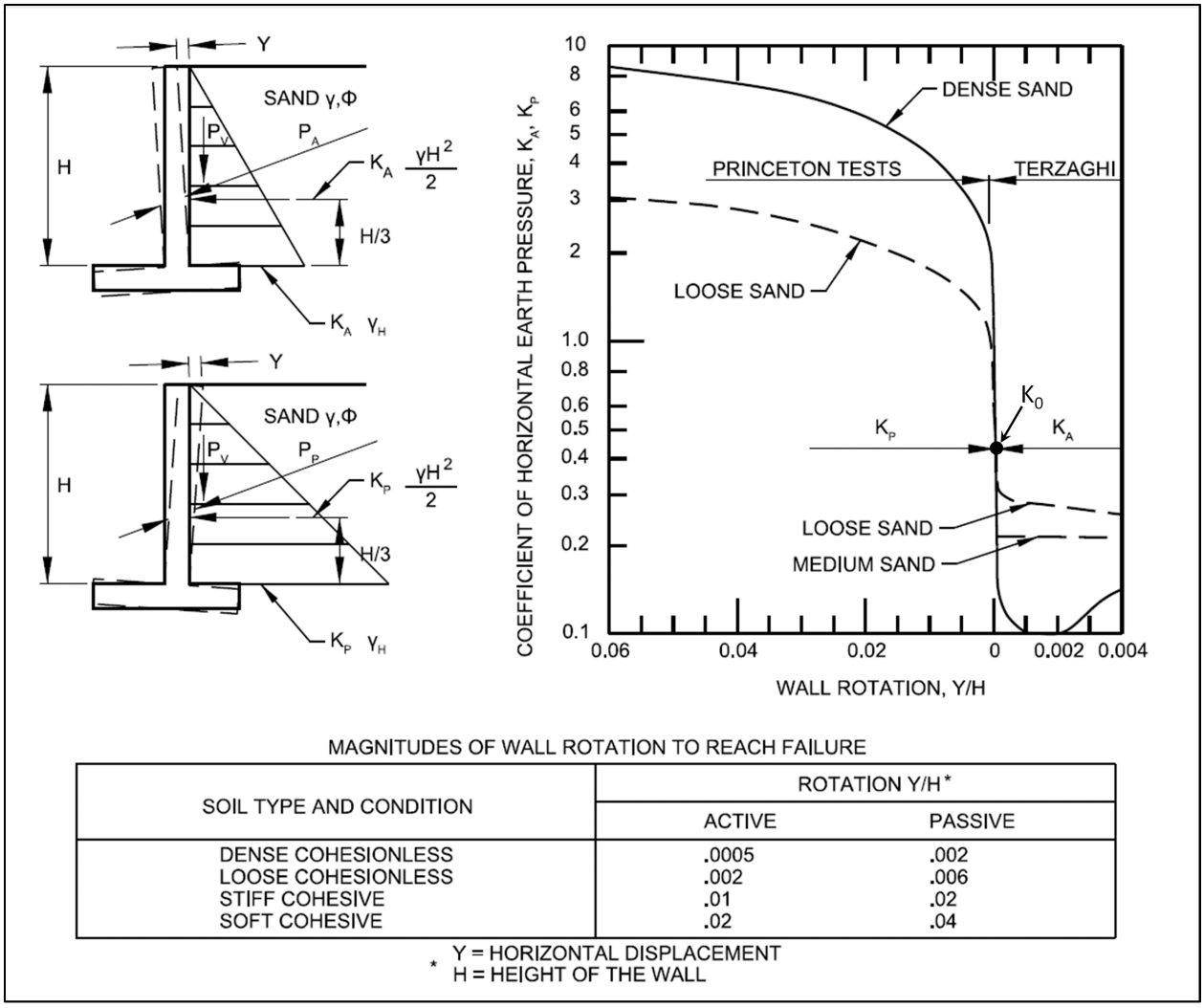

MAGNITUDES OF WALL ROTATION TO REACH FAILURE

SOIL TYPE AND CONDITION	ROTATION Y/H*	
	ACTIVE	PASSIVE
DENSE COHESIONLESS	.0005	.002
LOOSE COHESIONLESS	.002	.006
STIFF COHESIVE	.01	.02
SOFT COHESIVE	.02	.04

* Y = HORIZONTAL DISPLACEMENT
H = HEIGHT OF THE WALL

Figure 6.8. Variations of Earth Pressure Force with Wall Movement Calculated by Finite Element Analyses (Department of the Navy, 1982)

6.7.4.4. Concrete Walls with Deep Foundations. The earth pressures applied to walls with deep foundations should be consistent with the expected movements on the wall-foundation system. Deflections under usual loads should be very small with progressively larger movements typically expected for the unusual and extreme load cases. There are two general categories of walls with deep foundations.

6.7.4.4.1. Walls with Stiff Foundations. Little movement is expected under the expected loads. Earth pressures should be assumed at-rest in this case. At-rest pressures can also be used for simplicity of analysis for walls where soil loads are minor compared to other loads.

6.7.4.4.2. Walls with Flexible Foundation. Wall translation is sufficient for lateral earth pressure to progress from at-rest to active pressures as loads increase. The earth pressures on these walls should be computed using the equations for a single earth wedge in paragraphs 5-3 and 5-4 of EM 1110-2-2100. Values of the developed internal friction and cohesion parameters (computed using the prescribed factor of safety) should be compatible with the expected movements, load cases, and performance. For example, earth pressures for usual load cases would be computed using developed shear strength parameters for that case as defined in EM 1110-2-2100.

6.7.4.5. Cantilever Sheet Pile Walls and Single Anchor Sheet Pile Walls. Sheet pile walls are relatively flexible structures capable of sufficient movement under loading to develop active soil pressures. Limit equilibrium analyses are performed assuming that active and passive soil pressures are developed.

6.7.4.6. Post Tensioned Tieback Walls. The post-tensioned anchors in tieback walls create unique soil pressures. These soil pressures are described in Chapter 11.

6.7.5. Wall Friction and Adhesion.

6.7.5.1. In addition to the horizontal motion, relative vertical motion along the wall soil interface may result in vertical shearing stresses due to wall/soil friction in the case of granular soils. For soil strength modeled using undrained strength or when including an effective cohesion intercept, wall/soil adhesion will increase vertical shearing stresses. Vertical shear stresses will have an effect on the magnitude of the minimum and maximum horizontal earth pressures. For the minimum or active limit state, wall friction (δ') or adhesion ($\alpha \cdot c'$ or $\alpha \cdot s_u$) will slightly decrease the horizontal earth pressure. For the maximum or passive limit state, wall friction or adhesion may significantly increase the horizontal earth pressure.

6.7.5.2. While it is common to assume a smooth condition for wall design, with $\delta' = 0$ and $\alpha = 0$ (Rankine), interface strength can be used in design or analysis of walls. Note that wall friction is applicable to cantilevered and anchored pile walls and mass concrete gravity walls. It is not applicable to T-wall or L-walls because the plane at which lateral earth loads are computed is an earth face at the heel or toe of the wall.

6.7.5.3. Drained Condition

6.7.5.3.1. An interface friction angle (δ') is used to characterize drained interface strength (τ_f) as a function of effective normal stress (σ'_n).

$$\tau_f = \sigma_n' \tan \delta' = \sigma_n' \tan\left(\frac{\delta'}{\phi'}\phi'\right) \qquad \text{(Equation 6.6)}$$

Where:

τ_f = shear stress on wall at failure

σ'_n = effective stress normal to the wall

δ' = effective stress interface friction angle

δ'/ϕ' = the ratio of interface friction angle to friction angle

6.7.5.3.2. For drained sands and silty sands, where median particle (d_{50}) size may exceed average roughness of the wall material (R_{CLA}), the relative roughness ($R_n = R_{CLA}/d_{50}$) and installation method control the interface friction angle. Interface friction angles will vary by wall type, and typical design values are included in Table 6.2.

6.7.5.3.3. For drained clays and plastic silts, soil-soil φ' and δ' are considered to be influenced by similar factors but differ primarily due to wall roughness and installation method. Table 6.2 summarizes recommended design ratios of δ'/ϕ' for drained clays and plastic silts.

Table 6.2
Recommended Design Values for Interface Friction Angle (δ') or Interface Friction Angle Ratio (δ'/ϕ')[1,2,3]

Soil Type	Median Grain Size, d_{50} (mm)	PVC/smooth or painted steel	Rough Steel/ Formed Concrete	Rough Concrete Cast Against the Ground
		R_{CLA}[5] < 1 μm	R_{CLA}[5] ≈ 3 to 30 μm	R_{CLA}[5] > 0.2 d_{50}
Clean gravel, gravel sand mixtures, well-graded rockfall with spalls	6 to 20	δ' = 14	δ' = 20	δ' = 28
Coarse clean sand, silty sand-gravel mixture	2 to 6	δ' = 14	δ' = 22	δ' = 28
Medium sand	0.5 to 2	δ' = 14	δ' = 24	δ' = 28
Fine sand, silty sand, gravel or sand mixed with silt or clay	0.2 to 0.5	δ' = 14	δ' = 26	δ' = 28
Fine sandy silt to nonplastic silt	0.075 to 0.2	δ' = 14	δ' = 28	δ' = 28
Plastic silts and clays	< 0.075	δ'/ϕ' = 0.25	δ'/ϕ' = 0.5	δ'/ϕ' = 0.8
Rock[4]	NA	NA	NA	δ'/ϕ' = 0.8

[1] The value of δ' should always be less than or equal to ϕ'.

[2] For the use of δ' in computation of passive earth pressures by the Coulomb equation or the Wedge method, δ' must be ϕ'/2 or less because of simplifications in these methods.

[3] Table based on a review of data within Potyondy (1961), Uesugi & Kishida (1986 a,b), Jardine et al. (1993), Subba Rao et al. (1998), Gomez et al. (2000), Dietz (2000), Frost et al. (2002), Ruggeri (2004), Jardine et al. (2005), Zhang & Zhang (2006), Ho et al. (2011), and Quinteros et al. (2017).

[4] NA = Not Applicable.

[5] R_{CLA} = centerline average roughness of interface.

6.7.5.4. Undrained Condition

6.7.5.4.1. An undrained strength modification factor (c_a/s_u) is used to characterize undrained interface strength (τ_f) as function of undrained shear strength (s_u).

$$\tau_f = c_a = \frac{c_a}{s_u} s_u \qquad \text{(Equation 6.7)}$$

Where:

C_a = the soil-wall adhesion

C_a/s_u = adhesion strength modification factor

s_u = undrained strength (cohesion)

τ_f = limiting shear stress on the wall at failure

6.7.5.4.2. Adhesion strength modification factors combine changes in radial total and effective stress due to installation effects, time between installation and loading, as well as interface friction angle of the soil. For undrained analysis with soil-wall adhesion, it is recommended that $c_a/s_u \leq 0.5$.

6.7.5.5. Walls on Rock

6.7.5.5.1. For the base interface resistance of concrete gravity walls constructed on rock, bonding between the concrete and rock can occur during curing. Peak strength will be based on both an interface friction angle and effective stress adhesion intercept.

$$\tau_f = c_a + \sigma_n' \tan\delta = \frac{c_a}{c'} c' + \sigma_n' \, tan\left(\frac{\delta'}{\phi'} \cdot \phi'\right) \qquad \text{(Equation 6.8)}$$

Where:

τ_f = shear stress on wall at failure

C_a = the soil-wall adhesion

c' = the effective stress cohesion intercept

C_a/c' = adhesion strength modification factor

σ'_n = effective stress normal to the wall

δ' = effective stress interface friction angle

δ'/ϕ' = the ratio of interface friction angle to friction angle

6.7.5.5.2. The interface friction angle is presented in Table 6.2. The value of c_a is approximately 5 to 10 percent of the concrete compressive strength. At large displacements, the bonding will degrade, and strength will only be controlled by the interface friction angle with a zero adhesion intercept.

6.7.5.5.3. The friction angle of rock is rarely characterized for the analysis of the wall sliding. In cases where the friction angle of rock is known, use of δ'/ϕ' of 0.8 is recommended for rough concrete cast against rock. If laboratory tests are performed, assessment of the concrete-rock interface strength itself may be a more appropriate test. EM 1110-2-2200 recommends that direct shear strength laboratory tests on composite grout/rock samples are used to assess the foundation rock/structure interface shear strength. Note that it is particularly important to determine strength properties of discontinuities and the weakest foundation materials (soft zones in shears or faults), as these will generally control foundation behavior.

6.7.5.5.4. Foundation preparations for removing or fully grouting rock faults, fissures, and/or joints, as recommended for new structures in Chapter 13, may not have been carried out for existing rock-founded structures. Consequently, weaker shear planes within foundation joints may exist as compared to a carefully prepared concrete structure to rock foundation interface. If weaker shear planes are present, use of an interface friction angle with zero cohesion should be used in analysis.

6.7.6. Earth Pressure Calculations.

6.7.6.1. The earth pressures on a wall will change from the in situ at-rest condition if wall movements occur. When the wall moves away from a mass of soil, the shear resistance in the soil mass will reduce the load on the wall until reaching a minimum active condition. When a wall moves into a soil mass, the shear resistance in the soil mass will increase resisting loads on the wall until a maximum passive condition is reached.

6.7.6.2. Earth pressures on a wall can be calculated using the coefficient method and the wedge method. The coefficient method is described below and equations for the wedge method are provided in EM 1110-2-2100. Commentary on use of the wedge method is also contained in section 6.7.6.7.

6.7.6.3. Earth pressure calculations need to be performed for both slow (drained) conditions and quick (undrained) conditions, with wall performance assessed using a bracketed approach discussed in section 5.9.3. The drained S-case analysis of a Mohr-Coulomb ϕ'-c' soil is the generalized case and will be presented first. The undrained Q-case is a special condition of the drained case equations presented.

6.7.6.4. Drained Slow (S-case) Analyses.

6.7.6.4.1. Coefficient of Earth Pressure At-Rest. Prior to wall movements (Figure 6.8), the initial in situ horizontal effective stress in the ground can be estimated using the coefficient of earth pressure at-rest, K_0. In the absence of compaction pressures or stress history induced overconsolidation, K_0 is usually estimated based on the soil friction angle based on normally consolidated conditions.

$$K_0 = 1 - sin\phi' \quad \text{(Equation 6.9)}$$

Where:

K_0 = normally consolidated earth pressure coefficient at-rest (zero lateral displacement)

φ' = effective stress friction angle of the soil

• K_0 will be higher than Equation 6.9 in compacted and overconsolidated soils, and can be estimated as:

$$K_0 = (1 - sin\phi')OCR^{sin\phi'} \quad \text{(Equation 6.10)}$$

Where:

OCR = overconsolidation ratio

• The effective lateral at-rest earth pressure (σ'_{h0}) is then obtained from:

$$\sigma'_{ho} = \sigma'_{v0} K_0 \quad \text{(Equation 6.11)}$$

Where:

σ'_{v0} = the effective vertical soil pressure at a given depth

6.7.6.4.2. Coefficient Method for Active and Passive Pressures. Driving earth pressures (active) and resisting earth pressures (passive) can be calculated using earth pressure coefficients K_A and K_P, respectively. At a given depth (z) and effective unit weight (Υ'), the active (p'_a) and passive (p'_p) earth pressures can be calculated using the coefficient method.

$$p'_a = \gamma' z\, K_A - 2c'_d \sqrt{K_A \left(1 + \frac{C_a}{c'}\right)} \quad \text{(Equation 6.12)}$$

$$p'_p = \gamma' z\, K_P + 2c'_d \sqrt{K_P \left(1 + \frac{C_a}{c'}\right)} \quad \text{(Equation 6.13)}$$

Where:

γ' = the effective unit weight

z = a given depth

• K_A, K_P are the coefficients of active and passive earth pressures previously discussed with φ'_d and c_d being the "developed" strength properties. δ'mob is the developed angle of wall friction and C_a/c' is the adhesion strength modification factor.

• Where c_d is the developed cohesion (if any) and α is the ratio of developed wall adhesion (if any) to developed cohesion.

$$c'_d = \frac{c'}{FS} \quad \text{(Equation 6.14)}$$

6.7.6.4.3. Earth pressure coefficients are calculated as a function of the developed soil friction angle. For the case of a smooth vertical wall with a horizontal ground surface, a unique solution exists for earth pressure coefficients.

$$K_A = \frac{1-sin\phi'_d}{1+sin\phi'_d} = tan^2\left(45 - \frac{\phi'_d}{2}\right) \quad \text{(Equation 6.15)}$$

$$K_P = \frac{1+sin\phi'_d}{1-sin\phi'_d} = tan^2\left(45 + \frac{\phi'_d}{2}\right) \quad \text{(Equation 6.16)}$$

$$tan\phi'_d = \frac{tan\phi'}{FS} \quad \text{(Equation 6.17)}$$

Where:

K_A, K_P = defined above

ϕ' = angle of internal soil friction

FS = safety factor for analysis

ϕ'_d = developed angle of internal soil friction

6.7.6.4.4. Likewise, the developed angle of wall friction, δ'_d, is expressed as:

$$tan\delta'_d = \frac{tan\delta'}{FS} \quad \text{(Equation 6.18)}$$

Where:

δ' = angle of soil-wall interface friction

FS = safety factor for analysis

δ'_d = developed angle of soil-wall interface friction

6.7.6.4.5. To account for effects of the developed angle of wall friction (δ'_d), the wall angle (θ), and slope of the soil surface (β) behind (for active calculations) or in front of (for passive calculations) the wall (see Figure 6.9), Equation 6.15 and Equation 6.16 have been extended.

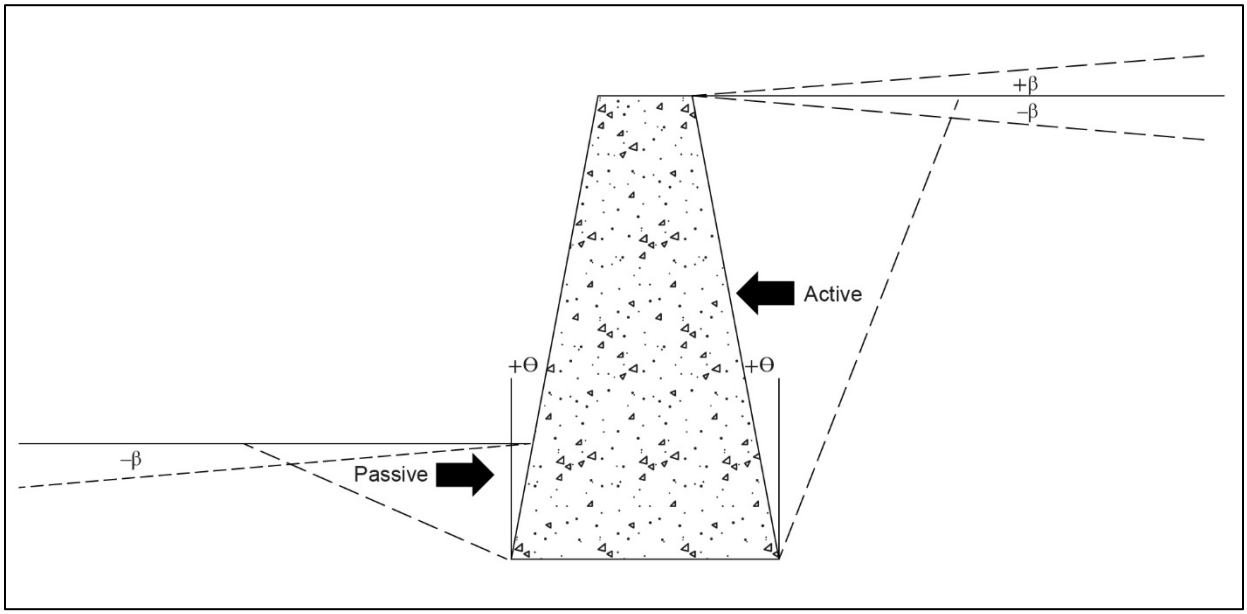

Figure 6.9. Illustration of Variables Within Earth Pressure Coefficient Equations and Restrictions on Use of Coulomb and Wedge Methods

6.7.6.4.6. For the active earth pressure coefficient accounting for δ, θ, and β, the Coulomb upper bound linear wedge solution is typically used in practice.

$$K_A = \frac{cos^2(\phi'_d - \theta)}{cos^2\theta \cos(\delta'_d + \theta)\left[1 + \sqrt{\frac{\sin(\phi'_d + \delta'_d)\sin(\phi_d - \beta)}{\cos(\delta'_d + \theta)\cos(\theta - \beta)}}\right]^2} \quad \text{(Equation 6.19)}$$

Where parameters are illustrated in Figure 6.9:

ϕ'_d = developed friction angle

θ = wall angle

δ'_d = developed interface friction coefficient

β = the slope angle

6.7.6.4.7. While the Coulomb K_P equation (Equation 6.20) has the potential to significantly overpredict passive earth pressures, when used with appropriate restrictions, listed as follows, it can reliably be used in the Coefficient method.

$$K_P = \frac{cos^2(\phi'_d+\theta)}{cos^2\theta\cos(\delta'_d-\theta)\left[1-\sqrt{\frac{\sin(\phi'_d+\delta'_d)\sin(\phi_d+\beta)}{\cos(\delta'_d-\theta)\cos(\beta-\theta)}}\right]^2} \quad \text{(Equation 6.20)}$$

Where parameters are illustrated in Figure 6.9:

ϕ'_d = developed friction angle

θ = wall angle

δ'_d = developed interface friction coefficient

β = the slope angle

6.7.6.4.8. The following restrictions need to be followed if applying the coefficient method.

• The interface friction coefficient, δ, is limited to a maximum of φ'/2 when the Coulomb equation and wedge method are used to calculate passive earth pressures (Ebeling and Morrison 1992, Ebeling et al., 2018).

• Equation 6.20 should not be used with positive β values when calculating passive earth pressure coefficients.

• For level ground and d' greater than φ'/2, USACE software (CWALSHT, CI-Wall) defaults to the logspiral solution (Caquot & Kerisel 1948, Department of the Navy 1982). The logspiral solution produces earth pressure coefficients than are less than or equal to those based on the Coulomb equation and are considered to be a more accurate solution. Tabulated values of the logspiral solution are included in Table 6.3. Additional information on earth pressure coefficients, included tabulated values for non-level ground and sloping walls, is presented in Appendix J.

Table 6.3
Logspiral Passive Earth Pressure Coefficient K_P for Level Ground Consistent with NAVFAC DM7.2 (1982) with Various Values of Developed Friction Angle and δ'/ϕ'

ϕ'_d	K_P with	K_P with	K_P with	K_P with	K_P with	K_P with	K_P with	K_P with	K_P with	K_P with	K_P with
deg	δ'/ϕ'=1.0	δ'/ϕ'=0.9	δ'/ϕ'=0.8	δ'/ϕ'=0.7	δ'/ϕ'=0.6	δ'/ϕ'=0.5	δ'/ϕ'=0.4	δ'/ϕ'=0.3	δ'/ϕ'=0.2	δ'/ϕ'=0.1	δ'/ϕ'=0.0
16	2.31	2.28	2.26	2.21	2.14	2.07	2.01	1.94	1.88	1.81	1.76
17	2.46	2.42	2.40	2.34	2.27	2.19	2.11	2.03	1.97	1.89	1.83
18	2.61	2.57	2.54	2.47	2.39	2.30	2.21	2.12	2.04	1.96	1.89
19	2.80	2.75	2.72	2.64	2.54	2.44	2.34	2.24	2.15	2.05	1.97
20	3.01	2.96	2.91	2.83	2.71	2.59	2.48	2.37	2.26	2.16	2.04
21	3.20	3.14	3.09	2.99	2.86	2.72	2.60	2.47	2.35	2.23	2.12
22	3.40	3.34	3.27	3.16	3.01	2.86	2.71	2.57	2.44	2.30	2.20
23	3.70	3.63	3.55	3.41	3.24	3.07	2.90	2.74	2.59	2.44	2.28
24	3.97	3.89	3.80	3.64	3.45	3.25	3.06	2.88	2.71	2.54	2.37
25	4.29	4.20	4.09	3.91	3.69	3.47	3.26	3.05	2.86	2.66	2.46
26	4.60	4.51	4.37	4.16	3.91	3.66	3.42	3.19	2.98	2.76	2.56
27	5.00	4.90	4.74	4.49	4.20	3.92	3.65	3.39	3.15	2.90	2.66
28	5.40	5.29	5.10	4.81	4.49	4.16	3.86	3.57	3.30	3.02	2.77
29	5.90	5.78	5.55	5.22	4.84	4.47	4.13	3.80	3.50	3.19	2.88
30	6.42	6.29	6.02	5.64	5.21	4.79	4.40	4.03	3.69	3.34	3.00
31	7.00	6.86	6.53	6.09	5.59	5.12	4.69	4.26	3.88	3.50	3.12
32	7.70	7.55	7.15	6.63	6.06	5.52	5.03	4.55	4.11	3.69	3.25
33	8.40	8.23	7.76	7.16	6.52	5.90	5.34	4.81	4.32	3.85	3.39
34	9.20	9.02	8.47	7.77	7.03	6.33	5.70	5.10	4.55	4.03	3.54
35	10.2	10.0	9.34	8.53	7.67	6.87	6.15	5.47	4.85	4.25	3.69
36	11.3	11.1	10.3	9.33	8.34	7.43	6.61	5.84	5.14	4.48	3.85

6.7.6.5. Undrained Quick (Q-case) Analyses. Q-case undrained analyses assume that shear strength does not change due to loading. This analysis condition can be modeled using the $\phi = 0$ assumption. Undrained analyses are often presented in terms of total stresses, however, for these conditions $K_A = K_P = 1$, and a special case of Equations 6.12 and 6.13 evolve. For $\varphi = 0$, $c = s_u$, and $K_A = K_P = 1$:

$$p'_a + u = \gamma' z + u - 2s_u \sqrt{1 + \frac{C_a}{s_u}} \quad \text{(Equation 6.21)}$$

$$p_a = \gamma z - 2s_u \sqrt{1 + \frac{C_a}{s_u}} \quad \text{(Equation 6.22)}$$

Where:

u = the pore water pressure

s_u = the undrained strength ($\phi = 0$ assumption)

C_a/s_u = the adhesion strength modification factor

p_a = the total active pressure

γ = the total unit weight

$$p'_p + u = \gamma' z + u + 2s_u \sqrt{1 + \frac{C_a}{s_u}} \quad \text{(Equation 6.23)}$$

$$p_p = \gamma z + 2s_u \sqrt{1 + \frac{C_a}{s_u}} \quad \text{(Equation 6.24)}$$

Where:

u = the pore water pressure

s_u = the undrained strength ($\phi = 0$ assumption)

C_a/s_u = the adhesion strength modification factor

p_p = the total passive pressure

γ = the total unit weight

6.7.6.6. Coefficient Method for Layered Soils.

6.7.6.6.1. Although originally developed for homogeneous soils, the coefficient method is assumed to apply to layered soil systems composed of horizontal, homogeneous layers. The product $\gamma' z$ in Equation 6.12 and Equation 6.13 is the geostatic effective soil pressure at depth z in the homogeneous system. In a layered system, this term is replaced by the effective vertical soil pressure σ'_v at depth z including the effects of submergence and seepage on the soil unit weight. The active and passive earth pressures at any point are obtained from:

$$p'_a = \sigma'_v K_A - 2c' \sqrt{K_A \left(1 + \frac{C_a}{c'}\right)} \quad \text{(Equation 6.25)}$$

and

$$p'_p = \sigma'_v K_P + 2c' \sqrt{K_P \left(1 + \frac{C_a}{c'}\right)} \quad \text{(Equation 6.26)}$$

Where:

K_A, K_P = the coefficients of active and passive earth pressures previously discussed with ϕ'_d and c_d being the "developed" strength properties and δ'_{mob} is the developed angle of wall friction

σ'_v = the effective vertical soil pressure at a given depth

c' = soil effective cohesion intercept

C_a/s_u = the adhesion strength modification factor

6.7.6.6.2. Due to the equivalence of equations Equation 6.12 and Equation 6.21, as well as Equation 6.13 and Equation 6.23, Equation 6.25 and Equation 6.26 can be applied to S-case and Q-case analyses, if $\phi = 0$ and s_u is substituted for c' in layers that will behave undrained for the Q-case. It is noted that the coefficient method procedure can result in large discontinuities in calculated pressure distributions at soil layer boundaries.

6.7.6.7. Wedge Methods for Soil Pressures. The coefficient method does not specifically account for the effects of multilayer soils, an irregular ground surface, or sloping soil layer boundaries. When these effects are present, the soil pressures can be calculated by the wedge method using numerical limit equilibrium analyses.

6.7.6.7.1. Graphical approaches or computer programs (CWALSHT, CTWALL, CI-WALL) can be used to resolve earth pressures for complex foundation conditions. An approximate closed-form solution is included in EM 1110-2-2100 as the general wedge method. When complex methods are used to determine a refined estimate of earth pressure acting on the wall, a hand calculation with earth pressure coefficients for a simplified geometry should be used to verify the method is applied correctly.

6.7.6.7.2. The following restrictions need to be followed if applying the wedge method:

- A reduced delta that is less than $\phi'/2$ needs to be used in the wedge method for passive earth pressure calculations.

- Positive β values should not be used for passive earth pressure calculations when using the wedge method.

6.7.7. Effective Earth Pressures When Steady-State Seepage Is Present.

6.7.7.1. As described in section 6.6.7, under differing load conditions walls may experience water pressures associated with any of the following:

6.7.7.1.1. No water (groundwater levels below wall);

6.7.7.1.2. Hydrostatic;

6.7.7.1.3. Transient (typically not considered in design); and

6.7.7.1.4. Steady-state.

6.7.7.2. Existing closed-form solutions for the calculation of lateral earth pressures are based on effective stress with hydrostatic conditions. They do not account for seepage forces. These seepage forces increase effective soil stress and frictional soil strength on the high head side of walls. They decrease effective soil stress and frictional soil strength on the low head side.

6.7.7.3. A practical approach to incorporate seepage body forces into these earth pressure equations in an effective stress analysis is to change the buoyant unit weight of soil. For example, simplified steady-state flow conditions (with homogenous, isotropic hydraulic conductivity) are commonly used in wall stability analyses and approximated by the line-of-creep method presented in section 6.6.9.1. This method results in a constant seepage gradient in the soil on both sides of the wall in the transformed 1-D flow path. Under this approach, the effect of seepage is to alter the effective unit weight of water in the region of flow to:

6.7.7.3.1. High head side (vertical flow downward):

$$\gamma_{we} = \gamma_w(1 - i) \qquad \text{(Equation 6.27)}$$

6.7.7.3.2. Low head side (vertical flow upward):

$$\gamma_{we} = \gamma_w(1 + i) \qquad \text{(Equation 6.28)}$$

(From ITL-91-1)

Where:

γ_{we} = effective unit weight of water

γ_w = unit weight of water

i = seepage gradient (a positive number computed as the change in total head divided by the length along a path of seepage)

6.7.7.4. The product of the seepage gradient and the unit weight of water results in a body force acting on an element of soil as shown in Figure 6.11. For soils below the water levels on driving and resisting side of the wall, the effective unit weight of soil is used in place of the buoyant unit weight in the EM 1110-2-2100 wedge equations. The effective unit weight of soil is found by subtracting the effective unit weight of water as illustrated in Figure 6.10 and the following equation:

$$\gamma' = \gamma_s - \gamma_{we} \qquad \text{(Equation 6.29)}$$

Where:

γ' = effective unit weight of soil

γ_s = saturated unit weight of soil

γ_{we} = effective unit weight of water

Note that in the case of no seepage, $i = 0$, and γ_{se} equals the buoyant unit weight of soil. It is cautioned that the effective unit weight of soil approach discussed in this section is not for use in a total stress analysis.

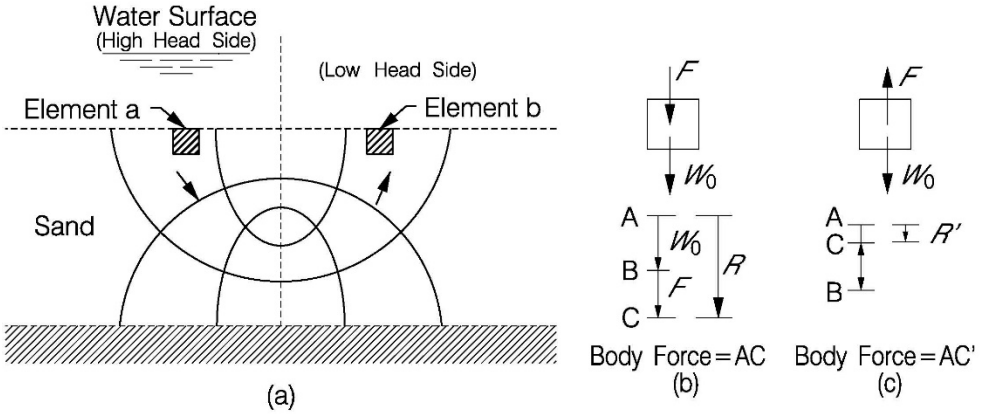

Figure 6.10. Seepage Force Effects (After Cedergren, 1977)

(a) Flow net for a sheet pile wall for a homogenous isotropic soil.
(b) Seepage force, *F,* combines with effective weight, W_o, on element a to increase the body force vector AC.
(c) Seepage force reduces effective weight on element b to reduce the body force vector AC′.

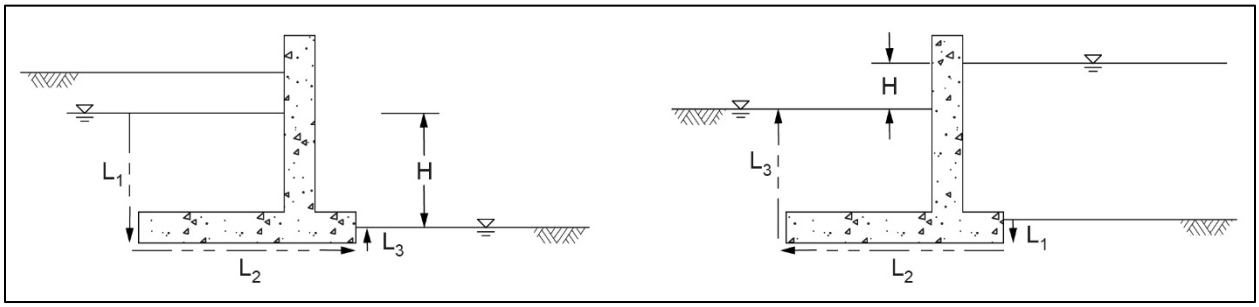

Figure 6.11. Seepage Paths for Gradient Determination Along the Side and Base Interfaces for the Structural Wedge

H = change in total head and (seepage) path length $L = L_1+L_2+L_3$.
(a) Retaining wall with high head on the "retained" side of the wall.
(b) Floodwall with high head on the "wet" side of the wall. Observe these vectors denote the direction of seepage.

6.7.8. Compaction Pressures.

6.7.8.1. Compaction pressures are created during backfill of walls and are relieved by wall movement. Compaction earth forces may be important for rigid concrete walls founded on rock, on very stiff deep foundations, and on concrete gravity walls, where the system does not allow movement to relieve them. The critical performance modes for compaction pressure loads is structural strength. The stability failure modes allow relaxation of the compaction pressures as movement occurs and therefore cannot progress to failure.

6.7.8.2. Compaction pressures should not be combined with other principal loads such as surcharge, hydrostatic water pressure, earthquake, etc., except in the case of rigid concrete walls. Movement from application of these loads relieves the compaction pressures.

6.7.8.3. Duncan et al. (1991) provide a practical computational procedure based on research to estimate compaction-induced earth pressures behind an unyielding wall. This reference is supplemented and partially replaced by the closure (Duncan et al., 1993).

6.7.9. Top of Ground Elevation. Ground elevations for design should be selected with consideration of variations in topography, potential land use, potential for erosion or scour, and potential for deposition from water or wind. This is particularly critical when lateral earth pressure on the resisting side of a wall is needed to meet minimum requirements for stability. The highest expected ground level on the driving side and lowest expected ground level on the resisting side of the wall should be used for analysis. The likelihood of ground elevations that differ from as-built conditions can be accommodated by use of the load categories in section 6.3.3.

6.8. Surcharge Loads.

6.8.1. Loads due to stockpiled material, machinery, roadways, and other influences resting on the soil surface near the wall increase the lateral pressures on the wall. If the soil system is assumed at-rest, the effects of surcharges are evaluated from theory of elasticity-based solutions, unless a uniform surcharge is assumed. If the soil system is modeled using active and passive pressures, the effects of surcharges are compatible with wedge theory.

6.8.2. Design Loads. Surcharge loads (ES) should be considered temporary, principal loads in load combinations, unless the surcharge is permanent. Typical surcharge forces used for design accounting for nominal vehicle or fill loading should be considered unusual loads. Surcharge loads for the extreme case are considered the upper limits of possible loads.

6.8.3. Surcharge Loads Applied to Active and Passive Pressures. Active and passive soil pressures are based on soil wedges. Except for very high-localized loads, such as from large construction equipment, surcharges are usually simplified as a uniform load that can be easily calculated with standard solutions.

6.8.4. Uniform Surcharge. A uniform surcharge is applied at all points on the soil surface. The effect of the uniform surcharge is to increase the effective vertical soil pressure, σ'_v in Equation 6.11, Equation 6.25, and Equation 6.26, by an amount equal to the magnitude of the surcharge.

6.8.5. Surcharge Loads from Elastic Theory.

6.8.5.1. Strip Loads. A strip load is continuous parallel to the longitudinal axis of the wall but is of finite extent perpendicular to the wall as illustrated in Figure 6.12. The additional pressure on the wall is given by the equations in Figure 6.12. Note these angles are expressed in radians. Negative pressures calculated for strip loads are to be ignored.

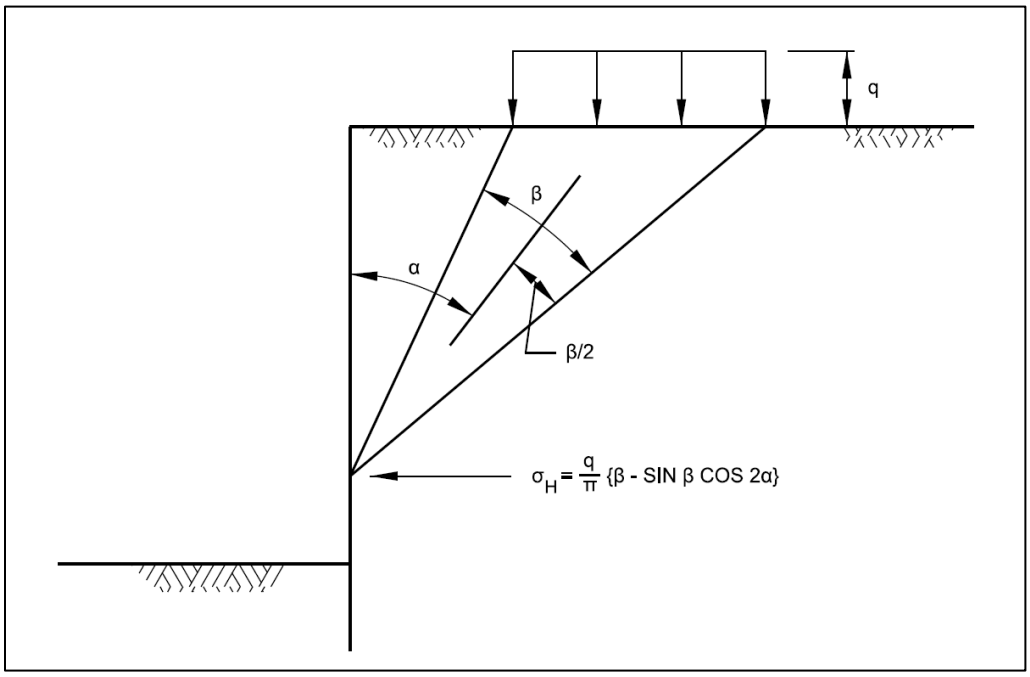

Figure 6.12. Strip Load (Section View, Angles in Radians)

6.8.5.2. Line Loads. A continuous load parallel to the wall, but of narrow dimension perpendicular to the wall, may be treated as a line load as shown in Figure 6.13. The lateral pressure on the wall is given by the equation in Figure 6.13.

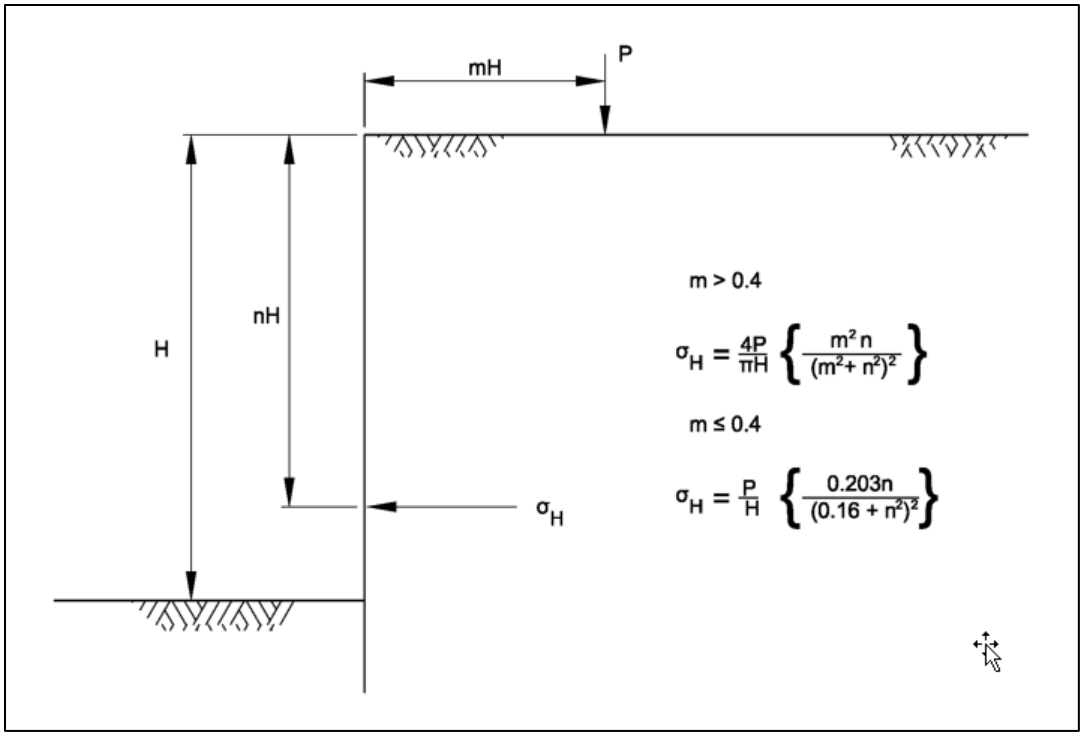

Figure 6.13. Line Load (Section View)

6.8.5.3. Ramp Load. A ramp load, increases linearly from zero to a maximum that subsequently remains uniform away from the wall. The ramp load is assumed continuously parallel to the wall. The equation for lateral pressure is given by the equation in Figure 6.14. Note these angles are expressed in radians.

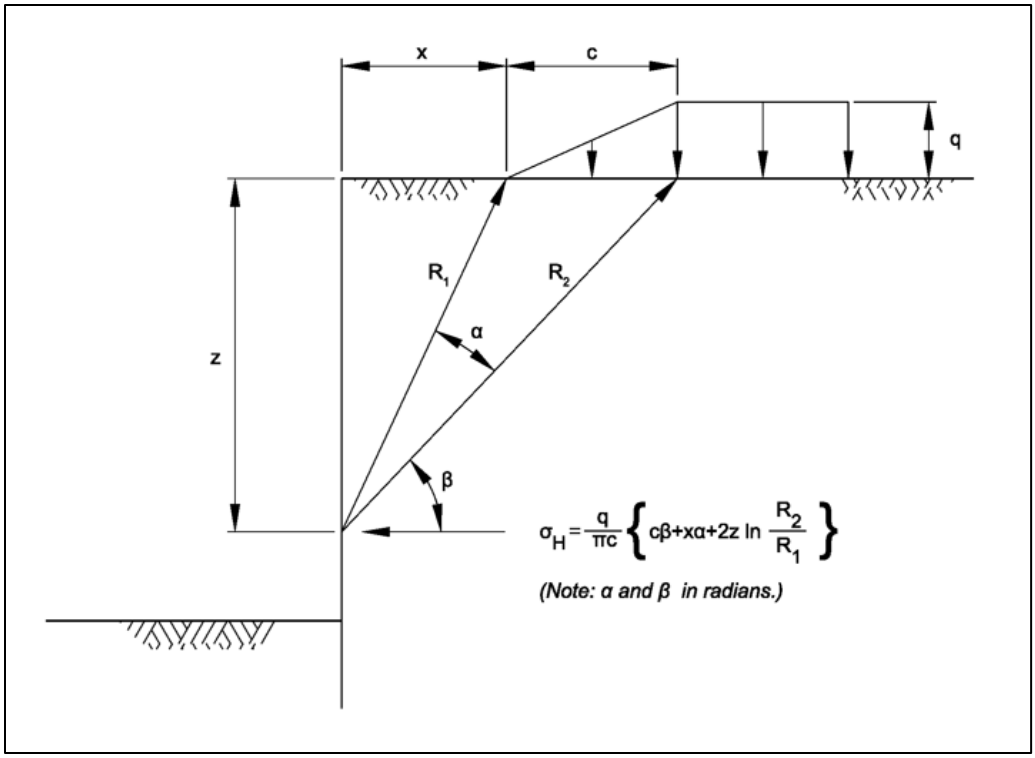

Figure 6.14. Ramp Load (Section View)

6.8.5.4. Triangular Loads. A triangular load varies perpendicularly to the wall, as shown in Figure 6.15, and is assumed to be continuously parallel to the wall. The equation for lateral pressure is given in Figure 6.15. Note these angles are expressed in radians.

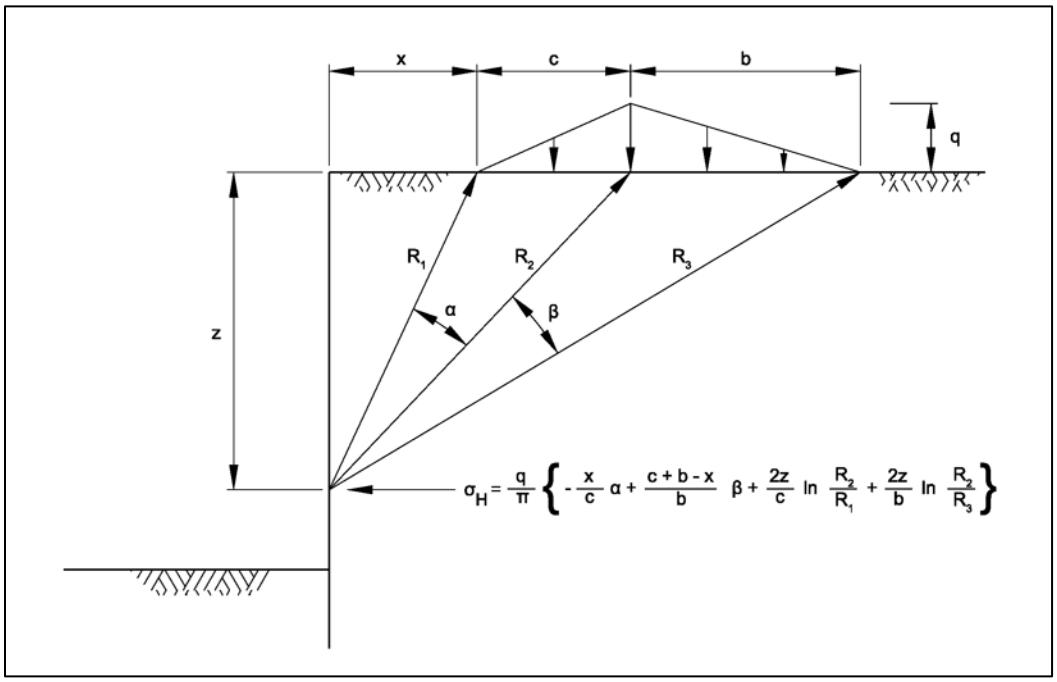

Figure 6.15. Triangular Load (Section View)

6.8.5.5. Area Loads. A surcharge distributed over a limited area, both parallel and perpendicular to the wall, should be treated as an area load. The lateral pressures induced by area loads may be calculated using Newmark's Influence Charts (Newmark 1942). The lateral pressures due to area loads vary with depth below the ground surface and with horizontal distance parallel to the wall. Because the design procedures discussed here are based on a typical unit slice of the wall/soil system, it may be necessary to consider several slices near the area load.

6.8.5.6. Point Loads. A surcharge load distributed over a small area may be treated as a point load. The equations for evaluating lateral pressures are given in Figure 6.16. Because the pressures vary horizontally parallel to the wall, it may be necessary to consider several unit slices of the wall/soil system for design.

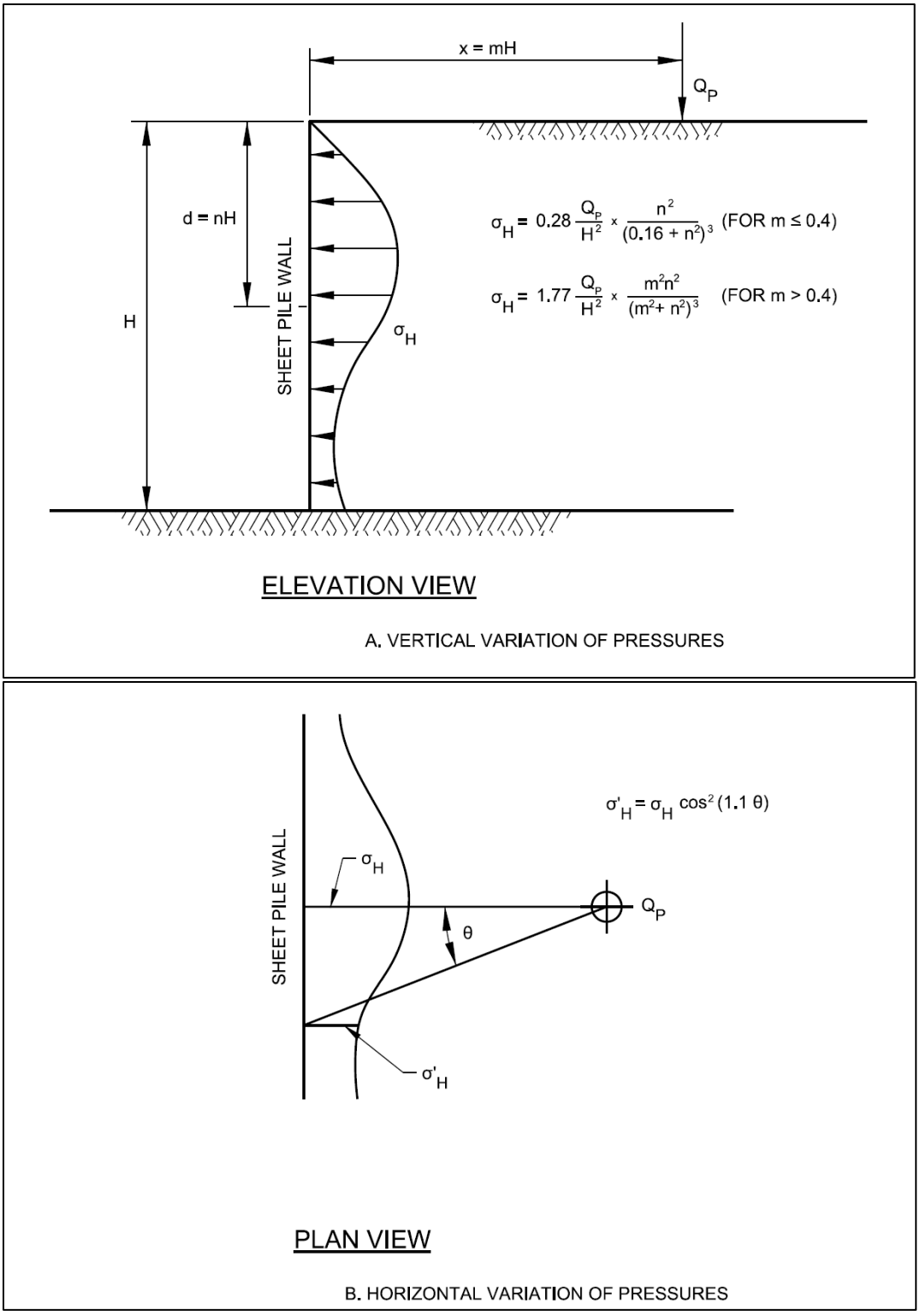

Figure 6.16. Point Load (After Terzaghi, 1954)

6.9. Earthquake.

6.9.1. General. In developing earthquake (EQ) loads, two levels of design earthquakes are considered for serviceability and strength, as defined in ER 1110-2-1806. The Operating Basis Earthquake (OBE) is an unusual load and the Maximum Design Earthquake (MDE) is an extreme load. For critical features, the Maximum Credible Earthquake (MCE) is used for the MDE. The design earthquakes, ground motions, and performance requirements for the OBE and MDE are determined according to ER 1110-2-1806.

6.9.2. Earthquake loads are of low probability of occurrence and short duration. Since they are principal loads, they are combined with normal operating loads when developing load combinations according to section 6.18. The other static loads typically consist of self-weight, uplift, internal and external water pressure, and lateral soil pressures.

6.9.3. The peak ground acceleration (PGA) for appropriate return periods for OBE, MDE and MCE can be obtained from the United State Geological Survey (USGS). Note that it is not necessary to calculate effective peak ground acceleration (EPGA) when PGA can be obtained directly from the USGS Unified Hazard Tool.

6.9.4. If the project is in a high seismicity region or moderate seismicity region and seismic is the governing load based on ER 1110-2-1806, then site-specific seismic studies and ground motions are required. EM 1110-2-6050 describes development of site-specific, design response spectra. EM 1110-2-6051 describes development of site-specific time-histories. EM 1110-2-6053 provides an example of dynamic soil-structure interaction analysis of a Kentucky Lock wall (earth retaining wall).

6.9.5. The PGA obtained from the USGS website is based on site class B/C. Define site classification, other than site class B/C, based on shear wave velocity using the site classification table in ASCE 7-16. For western U.S. (WUS) there are multiple site class options to choose from and no adjustment is needed. The PGA is corrected based on site classification for the project site.

6.9.6. Seismic Coefficient.

6.9.6.1. The PGA for OBE and MDE are corrected based on site classification for the project site as stated in 6.9.4 using site coefficient (F_{PGA}) from ASCE 7-16. For WUS, the site classification correction is not needed, as site class selection is included in the hazards tool. The horizontal seismic coefficient (k_h) used for the preliminary seismic stability analysis is 2/3 of corrected PGA.

6.9.6.1.1. PGA (corrected for site class) = PGA (calculated from USGS maps) x F_{PGA}

6.9.6.1.2. k_h = 2/3 PGA (corrected for site class)

6.9.6.2. If there is need to include vertical seismic coefficient (K_v), then standard practice is to take $K_v = 2/3\ K_h$. Generally, K_v can be neglected for all practical purposes.

6.9.6.3. Some USACE guidance has presented the use of EPGA to compute the seismic coefficient. This was because older versions of USGS maps did not provide PGA for design return periods used by USACE. It is not necessary to calculate EPGA when PGA can be obtained directly from the USGS Unified Hazard Tool.

6.9.6.4. The seismic coefficient method, although it fails to account for the true dynamic characteristics of the structure-water-soil system, is accepted as a semi-empirical method for determining if seismic forces control the design. If seismic load is the governing load case, then dynamic analysis should be undertaken as recommended in ER 1110-2-1806 using standard or site-specific response spectra and time-history.

6.9.6.5. Experience has shown that a seismic coefficient equal to 2/3 of the peak ground acceleration is a reasonable estimate for many hydraulic structures. Note that using this reduced seismic coefficient assumes displacements of a few inches are permissible. If they are not, then the full PGA should be used. A Newmark simplified sliding block method of analysis allows for the assessment of the magnitude of permanent seismically induced deformation as a function of the fraction of peak acceleration imposed on the sliding block (see 7.3.2).

6.9.7. Earthquake-Generated Inertial Forces.

6.9.7.1. General. EM 1110-2-2100 defines methods to calculate earthquake-generated inertial forces. When excess pore water pressures are present in the driving or resisting soil wedges, earth pressure and resultant earth and water force relationships given in Ebeling and Morrison (1992) are used to account for this earthquake induced excess pore water pressures.

6.9.7.2. Structural Inertia Force. In the seismic coefficient approach, the inertial force is computed as the product of the mass of the structural wedge and seismic acceleration.

6.9.7.3. Inertial Effects of Soil and Behavior of Backfill. Backfill material adjacent to a structure will induce inertial forces on the structure during an earthquake.

6.9.7.3.1. Backfill Yields. The Mononobe-Okabe (M-O) method can be used if the relative motion of the wall and the backfill material are sufficiently large to induce a limit or failure state in the soil. It is expressed in terms of the wall movements required to fully mobilize the soil strengths in the active and passive soil wedges. This is defined in Table 1, Chapter 2 on page 16 in Ebeling and Morrison (1992). The M-O method is defined in EM 1110-2-2100.

6.9.7.3.2. Backfill Yields (limit equilibrium software). The M-O procedure was developed for cohesionless backfills. The procedure has limitations with nonhomogeneous soils, complex backfills, and cohesive soils. Limit equilibrium software can be used for determining seismic active forces. A procedure in Anderson et al. (2008) generally consists of the following steps:

• Setup model geometry, water conditions, and soil properties. The internal face of the wall is modeled as a free boundary.

• Select appropriate slope stability analysis and sliding surface.

• Apply earth pressure as a boundary force (P) on the face of the retained soil. For static cases, the force location is assumed to be 1/3 of the retained soil height. For seismic cases using appropriate seismic coefficients, the location can be assumed to be at mid height. However, different locations varying from 1/3 to 2/3 of the retained soil height should be considered to determine maximum seismic soil pressure.

• Change magnitude of applied load (P) until a minimum factor of safety of 1.0 is calculated using the program.

6.9.7.3.3. Backfill Does Not Yield. The Wood's method as described in Ebeling and Morrison (1992) can be used if the sufficiently low intensity ground motions of the backfill material respond within the range of linear elastic deformations. It is expressed as a fraction of the wall movements required to fully mobilize the soil strengths in the active and passive soil wedges. This is defined in Chapter 8, section 8.1 on page 233 in Ebeling and Morrison (1992).

6.9.7.3.4. Backfill Partially Yields. The intermediate condition in which the backfill soil undergoes limited nonlinear deformation corresponds with the shear strength of the soil being partially mobilized. The simplified wedge (seismic coefficient) method can be used to estimate the backfill and wall inertial forces acting on a single wedge. EM 1110-2-2100 describes the simplified wedge method.

6.9.7.4. Effect of Water (hydrodynamic force). Water that is above the ground surface and adjacent to, or surrounding a structure, will increase the inertial forces acting on the structure during an earthquake. The displaced structure moves through the surrounding water thereby causing hydrodynamic forces to act on the structure. The hydrodynamic effects are approximated by using the Westergaard method (Westergaard 1933). EM 1110-2-2100 describes the method to calculate hydrodynamic force.

6.9.7.5. Design of Reinforced Concrete. For design of reinforced concrete walls, load factors for earthquake are defined in EM 1110-2-2104.

6.10. Hydrodynamic.

6.10.1. Hydrodynamic (Hd) forces are from hydraulic jumps, velocity head, vessel propwash/thrust, overtopping impingement, etc. Hydrodynamic forces from earthquake are included under Earthquake, EQ. Generally, these forces are estimated with great uncertainty in expected values.

6.10.2. Design values are based on maximum expected loading. Hydraulic jumps and the supercritical flow region before them may create conditions of unloading on the resisting side of a wall. Alternately, random waves created in hydraulic jumps may increase loads on walls. Hydrodynamic forces from hydraulic jumps can create severe vibrations in free standing stilling basin walls. See Fletcher and Saunders (1988).

6.11. Wave.

6.11.1. The lateral forces produced by wave (Hw) action are dependent on many factors, such as length, height, breaking point, frequency, and depth at structure. Wave forces for a range of possible water levels are determined according to EM 1110-2-1100. Wind events used to generate wave loads should account for the location of the structure and characteristics of the hydraulic loading.

6.11.2. For floodwalls with waves that are independent of water levels and that are primary loads, nominal wave loads are computed for extreme wind events according to section 6.3.5. Extreme wave loads are combined with companion hydrostatic loads, Hs.

6.11.2.1. For other load cases with independent water elevation and wind/wave events where wave loads are companion loads, design wave loads are determined as described in section 6.3.6 (return period of 10 years).

6.11.2.2. For coastal situations with correlation between surge and wave, annual exceedance of combined loads should be computed using a coupled analysis. The surge level and wave force computed as a function of probability of exceedance will be provided by the hydraulic engineer.

6.12. Impact from Debris or Floating Ice.

6.12.1. Impact from debris and floating ice (IM) may be perpendicular to the top of the wall for submerged walls that act as weirs. It may be from glancing blows from debris in flow parallel to the wall or it may be driven onto the wall by wind. Impacts should be determined from an assessment of probable debris and from past experience. Debris loads may be correlated with flood loads (Hs) and are combined with flood loads when debris may be experienced at a site during flooding. Debris loads should be considered to act at or below the water surface level for the hydrostatic loading being considered.

6.12.2. Debris size and loading should take into consideration the geographic location and hydraulic conditions of the debris transport system, such as streams, lakes, reservoirs, coastal waters, hurricane storm surges, or other transport systems. Factors determining debris impact loading are the mass of the debris, its velocity, orientation, and the relative stiffness of the debris and the structure. Various full and scaled down tests have been performed with a prototypical log in order to correlate the debris and transport system characteristics with the impact force imparted on various structures (Haehnel and Daly, 2002).

6.12.3. For the calculation of localized debris forces, see Haehnel and Daly (2002) and ASCE 7-16. Note that impact forces in the references are for flow perpendicular with the structure. For walls with flow parallel with the structure, there is little information available on possible impact forces from debris. Design loads for these situations are usually selected from past practices, typically 100 to 500 pounds per foot (450 to 2,000 N).

6.12.4. The magnitude of ice loads should take into consideration available local records of ice conditions. For more detailed methods for computing ice forces, see EM 1110-2-1612. Similar to debris, there is little information on potential impact forces from ice in flow parallel to the wall face.

6.13. Forces from Thermal Expansion of Ice. Forces from thermal expansion of ice (IX) may be important for walls with permanent pools against them, such as for dam walls. Design values should be based on expected infrequent values for the unusual load case and on upper bound values for the extreme load case. Thermal expansion ice forces from usual Loads are not normally used for design. Expansive lateral pressures induced by water freezing in the backfill can be avoided by backfilling with a clean free-draining sand or gravel or installation of a drainage collector system. For information on computations of thermal expansion ice forces, see EM 1110-2-1612.

6.14. Vessel and Barge Impact.

6.14.1. General. This load is caused by impact from aberrant vessels or barges (BI) moved by wind or current, or by impact from powered vessels entering or exiting locks, in channels, at wharfs and piers, etc. Vessels are powered watercraft larger than a small rowboat. Barges are large, flat bottomed, unpowered boats that are pushed or towed by vessels (towboats) and used for transporting freight. A barge tow is a composite system of one or more barges and a towboat that are lashed together with wire rope.

6.14.2. The type and size of vessels, barges, and barge tows that may impact a wall are site dependent and should be determined by the engineer after careful research of local conditions. For coastal locations, barges may be moved many miles during high surge and wind events.

6.14.3. Computation of Design Loads. Impact loads from vessels and barges are usually applied as principal loads and are a function of the kinetic energy of the vessel, the deformation of the vessel or barge during impact, and the response of the wall. General information is provided below.

6.14.4. Aberrant Vessels and Barges.

6.14.4.1. For walls, impact from aberrant vessels and barges is particularly of concern for coastal risk reduction systems where storms that bring surge and high winds also may create a large number of aberrant vessels and barges. Typically, barge tows are broken up by the events that cause them to be aberrant, so design should be for a single barge or vessel. Because water flows parallel with a wall, aberrant vessel allision is usually created by wind. Potentially,

rotation of a barge or vessel floating in the current along a wall could impact it but there is no evidence that this has occurred.

6.14.4.2. Construction of a submerged berm that can ground a vessel or barge may greatly reduce the possibility of impact. This should be used, if possible, rather than trying to design walls specifically for impact from large vessels. Dolphin structures may also be used to protect walls in specific locations. However, both dolphins and berms require Operation and Maintenance (O&M) to ensure that they are not degraded over time.

6.14.4.3. EM 1110-2-3402 provides guidance for computation of design forces from impact by aberrant vessels and barges.

6.14.5. Powered Vessels and Barge Tows.

6.14.5.1. Walls used near locks, channels, or waterfront structures may be subject to impact. Vessels under power typically travel parallel to walls, except when landing or docking, so direct impact at high speeds is not usually of concern. The designer should weigh the likelihood of impact and resulting damage as it applies to the particular situation.

6.14.5.2. When the wall is subject to regular docking impact at a pier or wharf, a fender system should be provided to absorb and spread the reaction. Design of fenders is provided by UFC 4-152-01.

6.14.5.3. Walls at navigation structures, like locks, are typically designed to withstand expected impact from glancing blows during landing or maneuvering. Walls covered in this manual would be components of a larger navigation project. See EM 1110-2-3402 for guidance on computation of barge impact forces on navigation structures.

6.14.6. Selection of Design Loads.

6.14.6.1. Vessel impact loads for usual and unusual load cases are selected based on expected load frequency and performance expectations for a particular structure and site. The expected frequency of usual and unusual loads is defined in section 6.3.3.

6.14.6.2. Vessel impact loads for extreme load cases are selected based on section 6.3.5.

6.14.6.3. Vessel and barge impact loads may be correlated with flood loads (Hs), such as for coastal walls where vessels can be blown about in storms that develop surge. In this case the vessel and barge impact loads are combined with flood loads in extreme cases when site conditions allow.

6.15. Wind.

6.15.1. When walls are constructed in exposed areas, wind (W) forces should be considered during construction and throughout the life of the structure. Wind loads are usually small compared to water loads and rarely control design. However, they may affect design as companion loads to primary hydraulic loads, or as primary loads on secondary structures.

6.15.2. Principal and companion wind loads are computed according to ASCE 7-16 (American Society of Civil Engineers, 2016). Wind loads for critical structures are calculated using criteria for Risk Category IV structures if a failure from the wind load would result in consequences that meet the definition of a critical structure in section 3.2. Wind loads for normal structures are calculated using criteria for Risk Category II structures.

6.16. Hawser. Retaining walls may be used as components of locks or harbor facilities and require mooring capabilities for barges. See EM 1110-2-2602 for a description of the hawser (HA) loads associated with locks. The design hawser force in EM 1110-2-2602 is based on the nominal breaking strength of a single line. Hawser loads for piers, wharfs, and other structures may be more or less than the load provided in EM 1110-2-2602. Hawser loads for these sites should be determined by the characteristics of the vessels and hawser lines at the particular site. Hawser loads based on the strength of a broken line should generally be considered unusual. Hawser loads that are based on loads less than the breaking strength of the line should be considered usual loads.

6.17. Vertical Live Loads.

6.17.1. Vertical live loads from general live loads (L) and vehicles (V) occur on floodwall closure structures, earth retaining walls subject to vertical loading, and on walls that are components of bridges, pump stations, and other structures used in hydraulic applications. They may include cranes and other special loads used for operating and maintaining hydraulic structures. Selection and design of vertical live loads will be performed according to industry standards such as LRFD Bridge Design Specification for vehicle bridges, American Railway Engineering and Maintenance-of-Way Association (AREMA) Manual of Railway Engineering for railroads, and ASCE 7-16 for building live loads.

6.17.2. Live loads for pump stations are designed according to EM 1110-2-3104. Live loads for hydroelectric power plant structures are designed according to EM 1110-2-3001.

6.17.3. For cases where the wall is partially covered under another authority (such as a public road or railroad), design of the wall for vehicle loads will be performed according to the authority. When vertical live loads are companion loads, serviceability level loads should be used for design. When applicable as loadings, walls should consider vertical loads either present or not present.

6.18. Load Combinations.

6.18.1. General. The general equations for combining loads are shown below. Example combinations are provided in Appendix C. The examples are provided for single load factor or safety factor designs. For examples with LRFD load cases, see EM 1110-2-2104 for reinforced concrete and EM 1110-2-2107 for hydraulic steel structures. For LRFD for other materials check for latest USACE guidance documents.

6.18.2. General Load Case Combinations. For strength design when using allowable stress or a factor of safety, or for serviceability design.

$$U = \Sigma Lp + L_{pr} + \Sigma Lt_c + Ld_c \qquad \text{(Equation 6.30)}$$

Where:

U = the combined load

Lp = permanent loads

L_{pr} = principal load (see section 6.3.4.1)

Lt = temporary loads

Ld = dynamic loads

Lp, Lt, and Ld are further defined in section 6.3.2.

$_c$ = designates companion loads (see section 6.3.6)

6.18.2.1. Ld_c is normally not included as a companion load when the principal load is a dynamic load. This is because of the unlikelihood of another large pulse load occurring at the same time as the principal pulse load. Consideration may be made for doing so in coastal situations.

6.18.2.2. For principal action loads that are correlated, such as hydrostatic and wave forces from storm created surge and wave, the applied principal action load is determined from the combined, correlated load. The combined load will not be combined with other temporary or dynamic loads.

6.18.3. Strength Design Using Load and Resistance Factor Design:

$$U = \Sigma \gamma_p Lp + \gamma_{pr} Lt_{pr} + \Sigma \gamma_c Lt_c + \gamma_c Ld_c \qquad \text{(Equation 6.31)}$$

Where, definitions in the previous paragraphs apply plus:

γ_p = load factor applied to permanent loads

γ_{pr} = load factor applied to principal loads

γ_c = load factor applied to companion loads

6.18.4. Strength Design Using LRFD Methods but with a Single Load Factor:

$$U = \gamma (\Sigma Lp + Lt_{pr} + \Sigma Lt_c + Ld_c) \quad \text{(Equation 6.32)}$$

Where, definitions in the previous paragraphs apply plus:

γ = load factor defined in Chapters 9 and 10.

6.18.5. Examples. Load combination examples for typical walls are shown in Appendix C.

6.19. Mandatory Requirements.

6.19.1. For strength load combinations temporary and dynamic companion loads must have a minimum return period of 10 years. Alternately, design water elevation for companion load must have a minimum of 1 percent probability of exceedance from stage-duration curve when that information is available, instead of stage-frequency.

6.19.2. For soils with cohesion, cracks in the soil or gaps between soil and structure must be assumed to exist on the active side of the structure (gap) or structural wedge (crack).

6.19.3. The bracketed approach for seepage must be used for sites with fine-grained material. Except those with high-water events of sufficiently short duration that no seepage can be confidently assumed.

6.19.4. Cutoff walls must be incorporated in piles with deep foundations to manage seepage through the potential void below the bottom of the wall.

Chapter 7
Analysis and Design – Concrete Walls with a Shallow Foundation

7.1. Introduction. This chapter describes analysis and design of concrete walls with shallow foundations as described in Chapter 2. General design requirements are described in Chapter 4. Site information needed to perform the analysis is described in Chapter 5 and the loads applied in the analysis are described in Chapter 6. Earthquakes effects on failure modes and soil response, including shear strengths, are covered in Chapter 17. Example calculations that demonstrate the guidance in this chapter are provided in Appendix D.

7.2. Performance Modes.

7.2.1. Analysis and design to address the general probable failure modes described in Chapter 3 are performed using performance modes as described in Chapter 4. Each general failure mode described in Chapter 3 has a corresponding performance mode for analysis and design. Performance modes for shallow-founded concrete walls include:

7.2.1.1. Sliding Stability (PFM SF-1);

7.2.1.2. Resultant Location (PFM SF-2);

7.2.1.3. Bearing Capacity (PFM SF-3);

7.2.1.4. Global Stability (PFM SF-4);

7.2.1.5. Internal Erosion (PFM SF-5); and

7.2.1.6. Strength of Structural Elements (PFM SF-6).

7.2.2. Settlement, deflection, and liquefaction and cyclic softening are also evaluated as they may affect the other performance modes or serviceability. Liquefaction and cyclic softening are covered in Chapter 17. As used in this manual, the term “stability” applies to external stability (sliding, rotation, flotation, and bearing), not to internal stability failures such as sliding on lift surfaces or exceedance of allowable material strengths.

7.3. Sliding Stability.

7.3.1. The purpose of a sliding stability analysis is to assess the safety of a structure against a potential failure due to excessive horizontal deformations. The potential for a sliding failure may be assessed by comparing the applied shear forces to the available resisting shear forces along an assumed failure surface. A sliding failure is imminent when the ratio of the applied shear forces to the available resisting shear forces is equal to one. Sliding stability is performed according to, and must meet the minimum requirements of, EM 1110-2-2100.

7.3.2. The sliding stability can be calculated using Computer Aided Structural Engineering (CASE) PC software CSLIDE and CTWALL. The permanent sliding deformation due to the earthquake ground motion of rock or soil founded concrete retaining walls can be calculated using CASE PC software CWSlip. Additional information on CASE PC software is provided in Chapter 16.

7.3.3. Multiple Wedge Analysis. Calculation of sliding in EM 1110-2-2100 is based on the multiple-wedge limit equilibrium model as shown in Figure 7.1. In this model the shear strength of the driving wedge, the base of the structural wedge, and the resisting wedge are reduced by a single factor of safety until forces causing sliding (driving wedge) are equal to the forces resisting sliding (structural and resisting wedges). The minimum required factors of safety in EM 1110-2-2100 are based on this model.

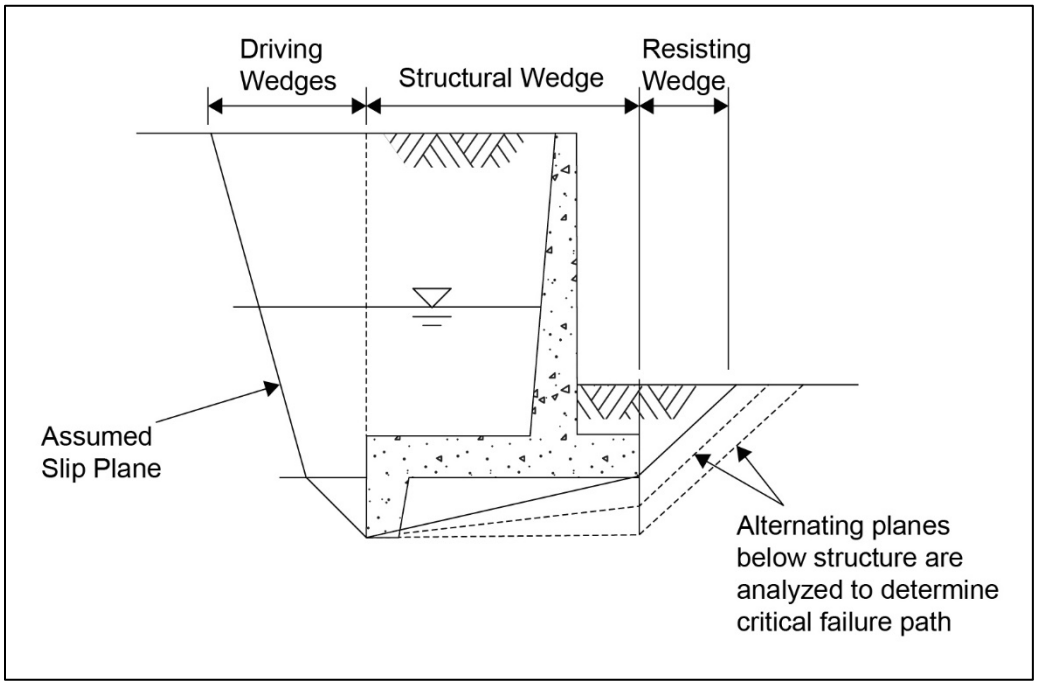

Figure 7.1. Multiple Wedge Sliding Analysis

7.3.4. Single Wedge Analysis.

7.3.4.1. A single-wedge solution is also provided in EM 1110-2-2100. The factor of safety is calculated as follows:

$$FS = \frac{N' \tan\delta + \frac{C_a}{c'} \cdot c' L}{T} \qquad \text{(Equation 7.1)}$$

Where:

N' = the component of the resultant normal to the base

δ = the interface friction angle between the base and the foundation soil

C_a/c' = the adhesion strength modification factor

c' = the effective stress cohesion of the soil

L = the length of the base in compression

T = the component of the resultant forces parallel to the base. This is the sum of driving forces, with developed soil strength parameters, minus the sum of resisting forces, with developed soil strength parameters. Seepage effects are accounted for in both the soil and water forces as described in section 6.7.7. (See Figure 7.2 through Figure 7.4 for depictions of the lateral forces.)

7.3.4.2. To emulate the multiple-wedge model, the lateral soil forces on both the driving and resisting side of the structure are computed using developed shear strengths, as described in EM 1110-2-2100 and in Chapter 6. The factor of safety calculated by the single wedge equation will be close to the multiple wedge solution when the factor of safety computed using Equation 7.1 is close to the factor of safety used to compute the developed soil pressures. Use of soil pressures that do not include developed shear strengths or incorrectly applying forces in the factor of safety equation will result in calculation of inaccurate factors of safety.

7.3.5. Base Partially in Compression.

7.3.5.1. For some load cases, the resultant location calculation will show that the normal component of the resultant will lie outside the kern (middle third) of the base area. The sliding analysis should be modified for this case to reflect the secondary effects that occur due to coupling of sliding and rotational behavior.

7.3.5.2. In this case a portion of the structural wedge will not be in contact with the foundation material. The uplift pressure on the portion of the base that is not in contact with the foundation material should be a uniform value equal to the hydrostatic pressure at the adjacent face (except for instantaneous load cases such as due to seismic forces). The cohesive component of the sliding resistance should only include the portion of the base area which is in contact with the foundation material.

7.3.6. Mass Concrete Gravity Walls. External sliding stability is performed according to EM 1110-2-2200.

7.4. Resultant Location.

7.4.1. Analysis and design for the resultant location are performed according to EM 1110-2-2100. Conformance with resultant location requirements ensures that the structure is safe from rotational failure. For unusual and extreme load conditions, the resultant is allowed to fall outside the middle-third of the base as long as allowable bearing pressure is not exceeded. In these instances, it is assumed that the structure foundation interface has no capability for resisting tensile stresses. Therefore, part of the structure's base is assumed to lose contact with the foundation resulting in changes to the uplift and bearing pressure acting on the base.

7.4.2. To calculate the resultant location for a wall, operative forces are applied to a free body of the structural wedge wall/soil system. Seepage effects are accounted for in both the soil and water forces as described in section 6.7.7. An example of the forces on an earth retaining wall with a horizontal base are shown in Figure 7.2.

7.4.3. Developed soil parameters are used to compute passive soil pressures for resisting side soil forces as well according to EM 1110-2-2100. But the resisting side soil forces cannot exceed driving side forces. For typical walls, little or no resisting side soil pressure is required to maintain horizontal equilibrium at service loads. In these cases, at-rest earth pressure with undeveloped parameters should be used on the resisting side to compute the location of the resultant. Earth pressures up to the full developed passive pressure can be used if greater resisting side pressure is mobilized by the applied loads after accounting for base shear resistance.

7.4.4. The moments of the forces on the wall are summed about point O as shown in Figure 7.2 (flat base) and

7.4.5. Figure 7.3 (sloping base). The resultant distance is calculated as:

$$x_R = \frac{\sum M_0}{N'} \qquad \text{(Equation 7.2)}$$

Where:

ΣM_0= summation of moments about Point 0

N' = effective normal base force = sum of the vertical forces (ΣV) for walls with horizontal bases as shown in Figure 7.2.

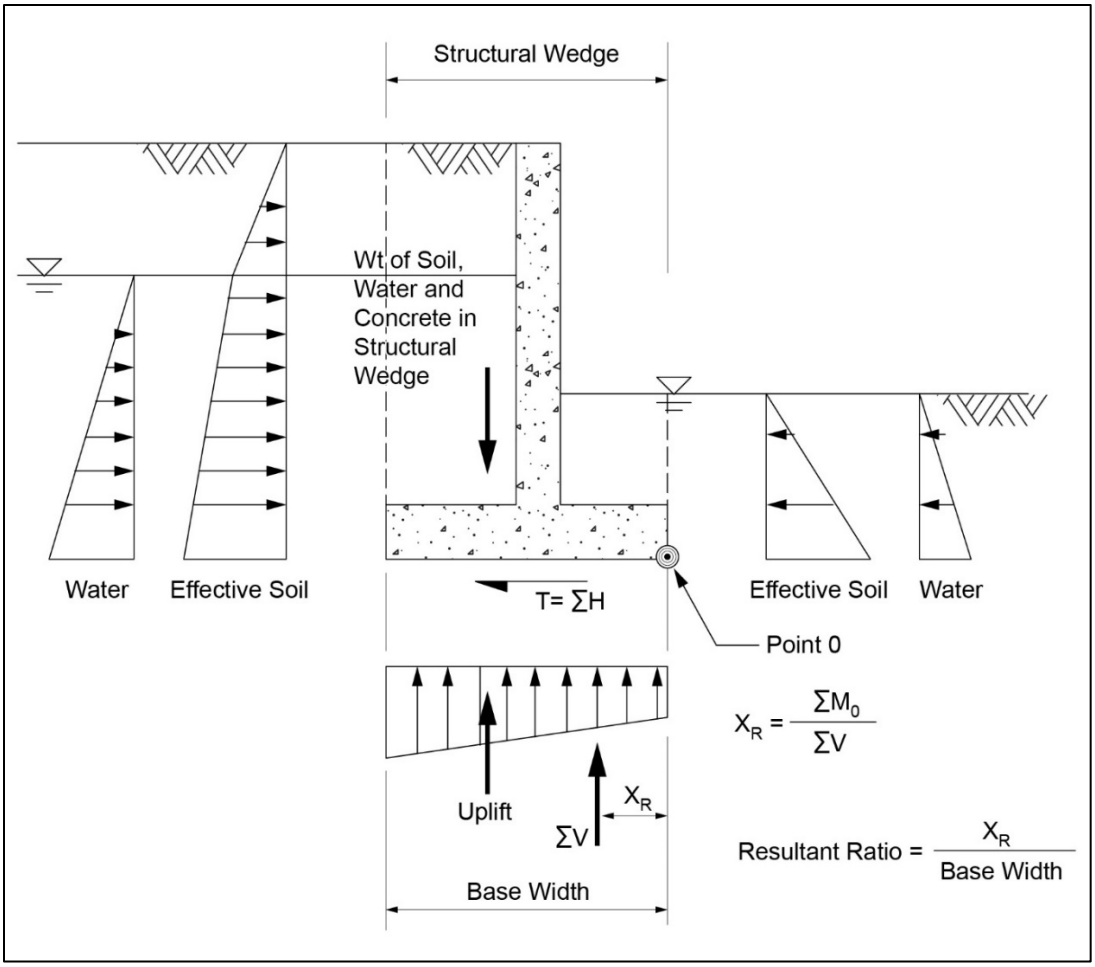

Figure 7.2. Forces for Analysis of the Location of the Resultant with Flat Base

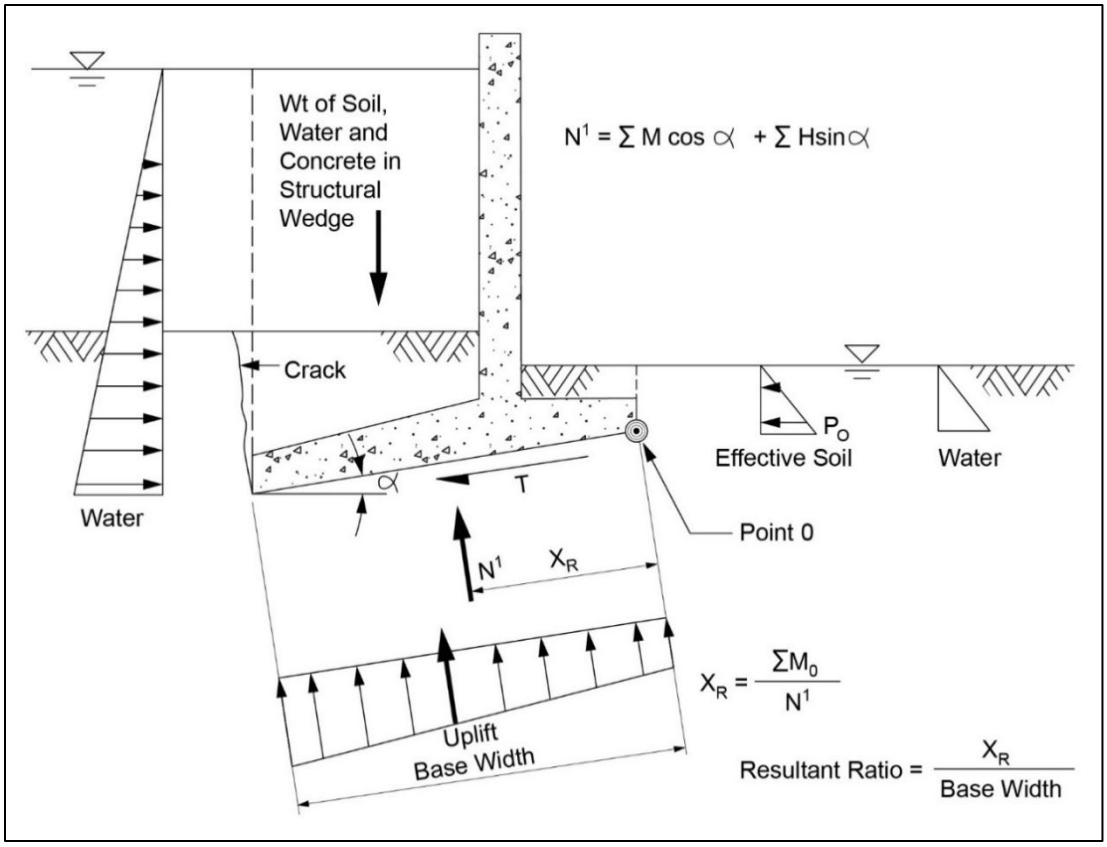

Figure 7.3. Forces for Analysis of the Location of the Resultant with Sloped Base

7.4.6. The rotation stability can be calculated using CTWALL. The permanent rotational deformation due to the earthquake ground motion of a rock-founded concrete retaining walls can be calculated using CASE PC software CWRotate.

7.4.7. Walls with Keys. Computation of the resultant location for a wall with a key requires determining the resisting forces acting along the key and along the base. Since these forces are indeterminate and cannot be determined by equilibrium methods, assumptions are made in order to compute the resultant location. For a wall with a horizontal base and a key, the shear resistance of the base is assumed zero and the horizontal resisting force acting on the key is assumed to be that required for equilibrium, as shown in Figure 7.4.

7.4.8. The resisting soil force down to the bottom of the toe may be computed using at-rest earth pressure if the material on the resisting side will not lose its resistance characteristics with any probable change in water content or environmental conditions and will not be eroded or excavated during the life of the wall. Prior to calculating the resultant location, the depth of the key and width of the base should be determined from a sliding stability analysis.

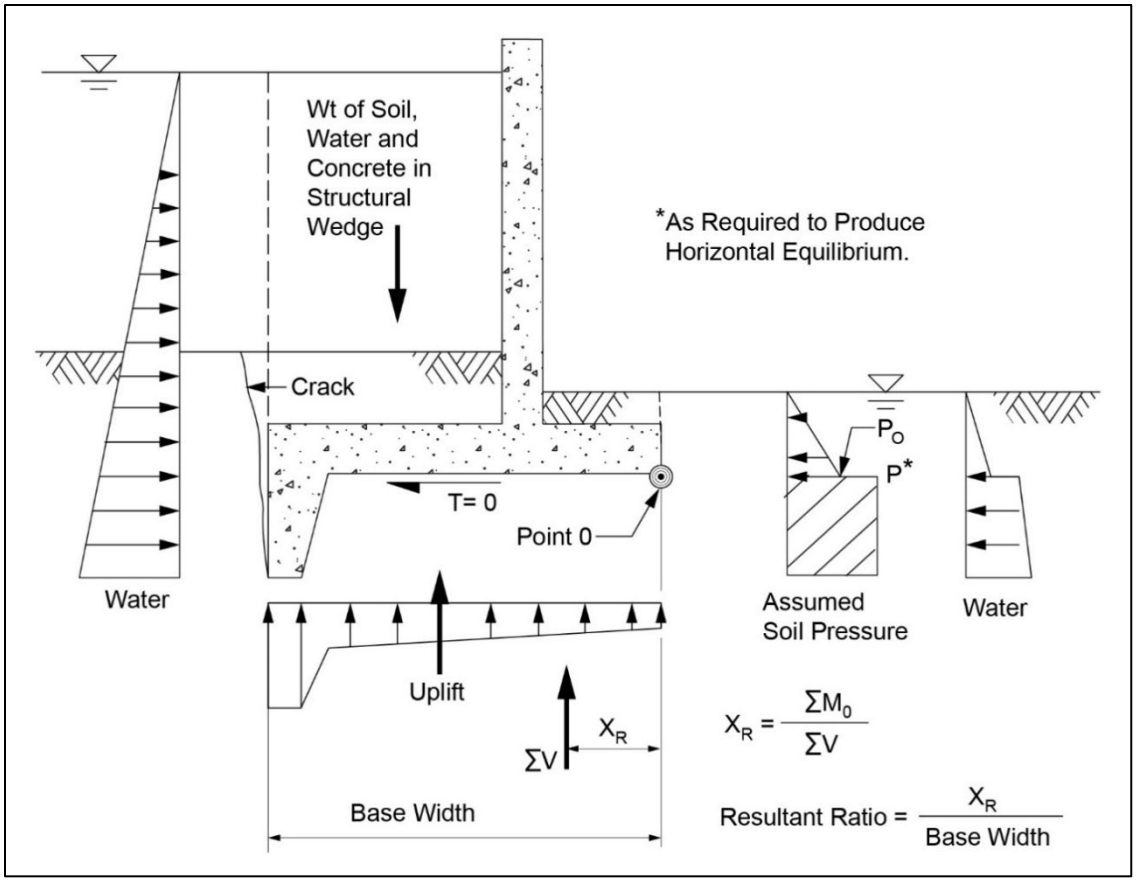

Figure 7.4. Forces for Analysis of the Location of the Resultant with Key

7.4.9. Anchoring. Structural anchors are often used to improve the stability of existing walls by increasing the downward forces for sliding resistance or to move the resultant location. Anchoring must not be used as a primary means to stabilize new walls. Prior approval is required by CECW-EC if a situation exists where anchors are used to stabilize a new wall (space limitations and/or economics dictate their use).

7.4.10. Mass Concrete Gravity Walls. The location of the resultant is in evaluated according to EM 1110-2-2200.

7.5. Bearing Capacity.

7.5.1. Analytical methods, traditional bearing capacity equations, field tests, and laboratory tests are used to determine the bearing capacity of soil and rock. The allowable bearing capacity is defined as the maximum pressure that can be permitted on a foundation soil or rock mass giving consideration to all pertinent factors. It provides adequate safety against rupture of the soil or rock mass, or settlement of the foundation of such magnitude as to jeopardize the performance and safety of the structure. Increases in allowable bearing capacity are permitted for unusual and extreme load conditions over those required for usual load conditions. The slope of the resultant and its location are critical in assessing the foundation bearing capacity.

7.5.2. Loads. For the calculation of bearing capacity, the resultant force at the base is needed along with its location and inclination. This information is determined from the analysis of the resultant location.

7.5.3. The mode of a bearing capacity failure depends on the relative compressibility of the soil, loading conditions, and geometric considerations. Typical methods used by USACE assume a general shear failure based on bearing capacity factors (N_c, N_q, and N_γ). This is incorporated within the bearing capacity equation used in the CASE PC software programs CBEAR and CTWALL.

7.5.4. A discussion of the principles and methods, including tabulated bearing capacity factors, equations for correction factors, and guidelines for calculations involved in analyzing bearing capacity is contained in EM 1110-1-1905. Additional information for computing bearing capacity of walls is as follows.

7.5.5. The equation for computing bearing capacity is:

$$Q = B' \cdot L' \left[\zeta_{cs}\zeta_{cd}\zeta_{ci}\zeta_{cb}\zeta_{cg} c N_c + \zeta_{qs}\zeta_{qd}\zeta_{qi}\zeta_{qb}\zeta_{qg} q_0 N_q + \zeta_{\gamma s}\zeta_{\gamma d}\zeta_{\gamma i}\zeta_{\gamma b}\zeta_{cg} \frac{1}{2} B' \gamma' N_\gamma \right] \qquad \text{(Equation 7.3)}$$

Where:

Q = normal component of the ultimate bearing capacity of the foundation

B' = effective width of the base (see below)

L' = length of the base (see below)

ζ = correction factors (see below)

c = cohesion parameter of the foundation (see EM 1110-1-1905)

N_c, N_q, N_γ = dimensionless bearing capacity factors for cohesion c, surcharge q, and soil weight (see EM 1110-1-1905)

q_o = effective overburden pressure on the plane passing through the base of the footing (see EM 1110-1-1905)

γ' = effective unit weight of the foundation material (see EM 1110-1-1905)

7.5.6. The ζ terms are correction factors for each bearing capacity factor that account for shape (ζ_{cs}, ζ_{qs}, $\zeta_{\gamma s}$), depth (ζ_{cd}, ζ_{qd}, $\zeta_{\gamma d}$), and load inclination (ζ_{ci}, ζ_{qi}, $\zeta_{\gamma i}$). Factors discussed by Meyerhof (1963) are used in the CBEAR and CTWALL programs and should be used for manual calculation of bearing capacity. Modification factors for ground inclination (floodwall on levee) (ζ_{cg}, ζ_{qg}, $\zeta_{\gamma g}$) and base inclination (ζ_{cb}, ζ_{qb}, $\zeta_{\gamma b}$) recommended by Vesic (1975) are used in the CBEAR and CTWALL programs and should be used for manual calculation of bearing capacity.

7.5.7. Important correction factors for walls are eccentricity and inclination. To account for eccentricity (e) of loading, the effective footing width (B'=B–2e) and length (L'=L–2e) are used. For strip footings use L'=1.

When $\phi > 0$:

$$\zeta_{ci} = \zeta_{qi} = \left(1 - \frac{\delta^o}{90^o}\right)^2 \quad \text{(Equation 7.4)}$$

$$\zeta_{\gamma i} = \left(1 - \frac{\delta^o}{\phi^o}\right)^2 \quad \text{(Equation 7.5)}$$

Where δ is the angle that the line of action of the load makes with a line dawn normal to the base.

For undrained quick (Q) and rapid (R) loading cases, only N_c and related correction factors should be used with $c = s_u$ and $\phi = 0$. The inclination factor for overburden stress is unity ($\zeta_{\gamma i} = 1$) and:

$$\zeta_{ci} = \zeta_{qi} = \left(1 - \frac{\delta^o}{90^o}\right)^2 \quad \text{(Equation 7.6)}$$

Minimum factors of safety to be used for bearing capacity are shown in

Table 7.1. The factor of safety (FS) is calculated as follows:

$$FS = \frac{Q}{N'} \quad \text{(Equation 7.7)}$$

Where:

Q = normal component to the base of the structure of the ultimate bearing capacity

N' = effective normal force applied to the base of the structure

Table 7.1
Bearing Capacity Minimum Factors of Safety

Load Category	Critical Structures			Normal Structures		
	Site Classification			Site Classification		
	Well Defined	Ordinary	Limited	Well Defined	Ordinary	Limited
Usual	3	3.5	NA	2.7	3	4
Unusual	2.7	3	NA	1.8	2	2.7
Extreme	1.8	2	NA	1.3	1.5	2

7.6. Global Stability.

7.6.1. Rotational, translational, or combined failure of a soil mass around the wall is considered a global stability failure, as illustrated in Figure 7.5. Global stability is typically assessed using limit equilibrium analysis methods within commercial software packages. For these methods, search procedures are used to identify the critical circular, non-circular wedge, or general non-circular potential slip surface with the lowest factor of safety. This is described in EM 1110-2-1902. It is noted that automatic search routines in various limit equilibrium slope stability commercial software may not return the most critical slip surface (least factor of safety). In this case engineers should exercise due diligence before accepting the results of searches for critical failure surfaces.

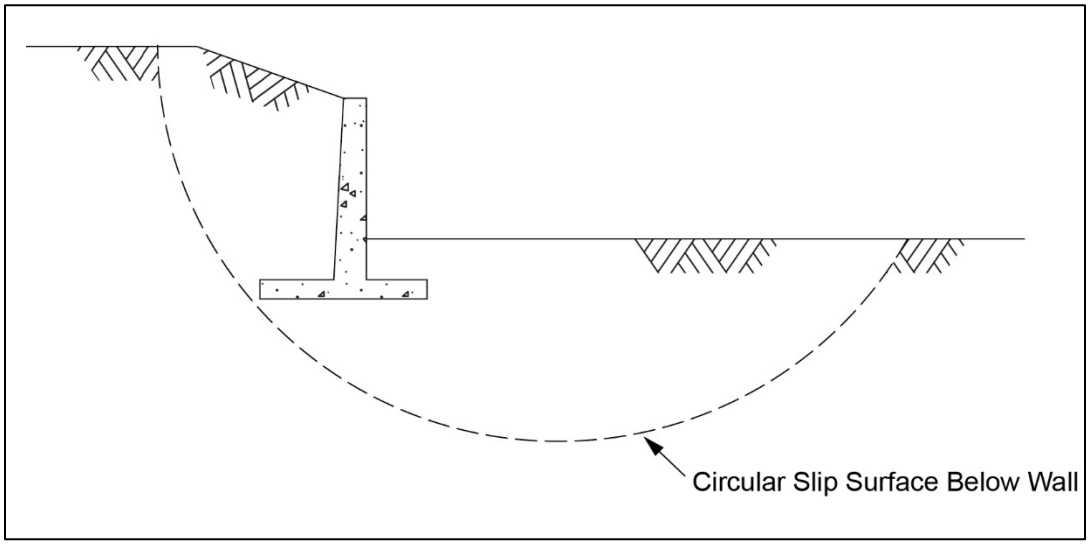

Figure 7.5. Example: Slip Surface Relevant to Global Stability Analysis

7.6.2. Many different analysis methods are available for application to analyses. However, a limit equilibrium method that satisfies both force and moment equilibrium, such as the Spencer (1967) method, must be used to assess the factor of safety. Both circular and planer slip surfaces usually need to be investigated. The latter is especially important for stratified, naturally occurring, foundation soils with varying shear strength with depth. Finite element and finite difference strength reduction analysis can complement limit equilibrium analysis and are discussed in Chapter 16. Factors of safety must meet or exceed the minimum values in Table 7.2.

Table 7.2
Minimum Factors of Safety for Global Stability

	Site Classification		
Load Category	Well Defined	Ordinary	Limited
Usual	1.4	1.6	3.3
Unusual	1.3	1.5	3
Extreme	1.1*	1.4*	2.3
*For MDE (and MCE) earthquake, seismic global stability and post-seismic performance are evaluated according to Chapter 17.			

7.6.3. Global stability analysis needs to be assessed for relevant loading cases (see Chapter 6) using appropriate combinations of strength (Q, R, or S, Chapter 5) and seepage conditions (Chapter 6). It is typically appropriate to perform multiple global stability analyses for each load case, using the bracketed approach for strength and seepage. Depending on the soil type, duration of loading, and amount of time after construction, different strength and seepage conditions will exist.

7.6.4. Seepage and stability results are linked, as high gradients lead to low effective stresses and lower strengths in a stability analysis. This may lead to unacceptably low factors of safety that require seepage control mitigation, discussed in section 7.7.4. Seepage control measures, such as sheet pile walls as part of a T-wall, should be incorporated into assessment of head distribution for a global stability analysis. However, these features are not included as a structural element for global stability analyses.

7.6.5. Within the bracketed approach, a quick case (Q) will be run with strength of clays and clayey silts based on undrained strength (ϕ=0), sands, silty sands, and gravels having drained strength. The R-case is a special category of Q-case analyses differing in how undrained strength is determined. It is not presented as a separate analysis case. Additionally, a slow case (S) will be run with steady-state seepage and all soils having drained strength. For the earthquake loading case, undrained strengths are used for all soils. During rapid drawdown, strength of clays and silts require special assessment as discussed in EM 1110-2-1902.

7.6.6. For further guidance on selection of soil strength and seepage conditions for various loadings analyzed, see EM 1110-2-1902 and EM 1110-2-1913.

7.7. Internal Erosion.

7.7.1. In the internal erosion failure mode, water seeping under the wall can lead to loss of foundation soils and/or rock that support the wall. Consequences of inadequate seepage control include heave, excessive quantity of flow, and unfiltered seepage that can lead to potential breach of the wall.

7.7.2. Conditions with less potential for developing a steady-state seepage condition may negate the need to check for heave and piping. This can occur when the wall foundation materials consist entirely of clay and loading duration is short relative to the permeability and drainage length.

7.7.3. Waterside Gap. The formation of a waterside crack or gap allows the development of a hydrostatic load condition that may extend to the base of the structure or tip of piling in cohesive soils. The formation of the gap shortens the effective seepage path beneath walls, which increases pore pressures and contributes to the likelihood of heave and piping. Therefore, include full hydrostatic pressure in cracks or gaps as described in Chapter 6.

7.7.4. Seepage Control. Controlling piping and heave are critical to maintaining the integrity of the wall and limiting deflection. Seepage control features are described in Chapter 12. They include relief wells, drains, waterside blankets or protected side berms, and sheet piling. Since steel sheet piling is permeable at the joints, it will not be 100 percent effective as a cutoff. It is included in analyses as described in Chapter 6.

7.7.5. Seepage Analyses. Walls are evaluated for internal erosion with the applicable portions of EM 1110-2-1901 and EM 1110-2-1913. The use of seepage analysis to determine pore pressures acting on walls is described in Chapter 6. These same types of analyses are used in the evaluation of internal erosion, which is described in Chapter 3. Evaluation of various steps in the internal erosion performance modes, in particular heave or progression, generally consider the seepage gradient, *i*, the change in total head over distance along the line-of-flow. Total head is the sum of pressure head, elevation head, and velocity head, although the velocity head in soil is negligible and assumed to be zero.

$$i = \frac{\Delta H}{\Delta L} \qquad \text{(Equation 7.8)}$$

Where:

i = gradient

H = total head (pressure head + elevation head + velocity head)

L = length along the line-of-flow

7.7.5.1. Evaluations of heave are based on the exit gradient, i_e. The critical vertical gradient is calculated utilizing the saturated unit weight of the soil to ensure soil does not fall below the zero effective stress condition. Gradient is sensitive to the distance over which it is measured. For a stratified foundation conditions where a horizontal surficial fine-grained blanket exists over a coarser substratum, the measurement of exit gradient is over the thickness of the blanket. Where no blanket exists, the exit gradient at the ground surface is typically measured over 1 or 2 ft. (0.3 or 0.6 m). A sloping ground surface, a partially saturated or irregular confining layer, concentrated defects or ditches in a confining layer, and the evaluation of heave for other exit conditions are further described in EM 1110-2-1913.

7.7.5.2. Computation of Factor of Safety for seepage is based on the vertical gradient (component) and defined as:

$$FS_{vg} = \frac{i_{cr}}{i_e} \qquad \text{(Equation 7.9)}$$

Where:

FS_{vg} = factor of safety based on vertical gradient

i_{cr} = critical vertical gradient = γ'/γ_w

i_e = vertical exit gradient

γ' = average effective (or buoyant) unit weight of soil

γ_w = unit weight of water

7.7.5.3. If a free draining layer is present and extends from the landside ground surface to the base of the structure or sheet pile, the gradient has traditionally been measured over this distance.

7.7.6. Minimum Requirements. Factors of safety for vertical gradient for the internal erosion failure mode must meet or exceed the values shown in Table 7.3 These minimum values are intended for evaluation of the ground immediately landside of the floodwall.

Table 7.3
Minimum Factors of Safety for Vertical Gradient, FS_{vg}

	Site Classification		
Load Category	Well Defined	Ordinary	Limited
Usual	2	2.8	5.6
Unusual	1.6	2.0	4.0
Extreme	1.3	1.6	3.2

7.7.7. An evaluation of internal erosion failure modes that demonstrate values less than those listed in Table 7.3 may be appropriate for locally thin areas in the blanket landside of a floodwall. For example, EM 1110-2-1913 allows for lower FS_{vg} further from the levee toe. The rationale is that seepage problems that develop further from the levee are less likely to progress beneath the levee to breach. As stated in Chapter 5, floodwalls and hydraulic retaining structures that are critical structures cannot be designed or evaluated based on limited site information.

7.7.8. Evaluations of backward eroding piping (BEP) are generally based on some form of the horizontal gradient, i_h. Where it is not possible to reliably prevent the erosion of subsurface material by meeting vertical effective stress factor of safety design criteria, empirical methods are available to evaluate the likelihood of piping progressing to breach. Screening level assessments typically use the average, also termed global gradient, acting from an assumed seepage entrance point to an assumed seepage exit point across the structure. Information on risk-informed evaluation is provided in section 14.3.

7.7.9. More detailed assessments try to predict a field corrected local gradient near the pipe exit. The inverse of horizontal gradient is creep ratio, which is described along with horizontal gradient approaches in EM 1110-2-1901 and EM 1110-2-1913. Due to the large uncertainty in performance of BEP, these methods are generally used in USACE in conjunction with a risk assessment for the full performance mode as described in Chapter 3.

7.7.10. When a levee system will consist of floodwall/levee composites systems, and sheet piling does not fully penetrate the levee embankment, internal erosion beneath the wall and through the levee must be addressed. Levee through seepage is addressed in EM 1110-2-1913. The analysis of internal erosion though the embankment is complicated by the presence and effectiveness of the sheet pile as a seepage barrier.

7.8. Settlement and Deflection.

7.8.1. General. Settlement (movement from soil compression) and deflection (lateral movement and rotation under loading) are serviceability limit states. They very rarely are associated with wall failure but can affect use and operability.

7.8.2. Settlement.

7.8.2.1. Calculation. EM 1110-1-1904 contains a discussion on the various factors involved in the total and differential settlement of a structure. It also contains methods for estimating settlements and the limitations in the accuracy of conducting settlement analyses from laboratory tests. The principles and methods presented are applicable to a majority of civil works projects. The USACE computer program CSETT can assist in performing a settlement analysis. Checking by hand, or with commercial programs, is also recommended.

7.8.2.2. Allowable Settlement. The structural engineer should work with the geotechnical engineer to determine the maximum amount of tolerable uniform and differential settlement such that concrete does not crack or integrity of waterstops is affected. Special joint details may be required to account for differential settlement. Differential settlement is particularly of concern at transitions between walls and embankments as discussed in section 12.2.

7.8.2.3. Design Elevation. Evaluation of total settlement is equally important when maintaining design grades or maintaining an authorized top of wall elevation. The constructed wall height may need to be increased to account for settlement in order to maintain a required minimum elevation over the life of the wall.

7.8.3. Deflection.

7.8.3.1. General. Walls designed to meet the stability requirements of EM 1110-2-2100 are expected to have minimal lateral deformation of the foundation under most loads. However, unusual and, especially, extreme loads may result in some wall movement. In addition, the cantilever wall stem of T and L-walls will deflect under loading. Walls may have noticeable deflection at the top even when the wall meets all strength performance requirements.

7.8.3.2. Design. The designer must determine the requirements for each wall situation. More deflection is usually accepted at the top of taller walls if foundation movement is minimized. Greater deflection is generally acceptable for walls that are on their own, such as floodwalls and earth retaining walls on channels or in levees. More control of deflection is needed for earth retaining walls associated with other facilities, such as roads, bridges, and buildings. Control of deflection is also needed when walls connect to stiffer structures, such as dam walls or wing walls that connect to a spillway structure. In addition, control of deflection is needed for floodwalls that connect to a pump station or other rigid structures.

7.8.3.3. Managing Deflection. Joints and waterstops must be designed to accommodate expected differential deflections (Chapter 12). Wall batters are sometimes applied on the visible side of the wall so that deflection is less visible. Walls calculated to have excessive stem displacement can be stiffened with additional wall thickness or by the use of counterforts or buttresses. Higher factors of safety can be applied to stability analysis of walls for which control of movements is critical. An example would be applying requirements for usual loads to unusual loads and applying requirements for unusual loads to extreme loads.

7.9. Strength of Structural Elements.

7.9.1. Reinforced Concrete. Reinforced concrete walls are designed for strength according to EM 1110-2-2104. Reinforced concrete walls should be designed for the loading cases given in Chapter 6 and the foundation pressures obtained from the resultant location stability analysis.

7.9.2. Analysis and Design of Cantilever T or L-Type Reinforced Concrete Walls.

7.9.2.1. Components should be analyzed as cantilever beams unless buttresses or counterforts are incorporated. For cantilever members the maximum factored shear force is computed at the base of the stem for stem design, at a distance d from the stem for toe design, at the face of the stem for heel design, and at the top of the key for key design. Wherever an L-shaped wall without a toe is used, the shear force is computed at the base of the stem for stem design and at the face of the stem for heel design. See EM 1110-2-2104 for more information.

7.9.2.2. Stem. The effects of axial loads are not normally substantial enough to be taken into account.

7.9.2.3. Toe. The toe is designed with loads imposed by soil, water, concrete, bearing pressures, etc. The effects of axial loads are not ordinarily substantial enough to be taken into account.

7.9.2.4. Heel. The loads for calculating design moments are the weight of soil, water, and concrete acting downward, along with uplift and bearing pressure acting upward. The base shear should be neglected when computing design bending moments when no key is used.

7.9.2.5. Special Considerations for Walls with Keys. The overturning stability criteria for walls with keys includes an assumed uniform distribution of earth pressure on the resisting side of the key. This may result in unconservative design for reinforcement in the top face of the wall heel at and near the face of the stem. A portion of this force may actually act along the plane at the base slab of the wall and not on the key. The designer is cautioned to consider this in developing a reinforcing design. A conservative approach for design of the heel top steel at the stem is recommended. Foundation pressures should be obtained from a stability analysis performed assuming that all of the earth resistance acts along the plane at the base of the wall.

7.9.3. Mass Concrete Gravity Walls. Mass concrete gravity walls are designed without reinforcement and therefore design tensile forces in the concrete are considered. Mass concrete gravity walls are designed according to EM 1110-2-2200.

7.9.4. Structural Steel and Aluminum. For floodwall closure structures and certain other walls, structural steel and/or aluminum components may comprise a portion of the wall. Structural steel and aluminum are designed according to EM 1110-2-2107.

7.10. General Practices.

7.10.1. Introduction. The following paragraphs provide guidance to enable the design engineer to establish the initial wall geometry in order to minimize the number of design iterations required to develop the final wall geometry. The guidance provided are for typical loading conditions. Use of this guidance is not mandatory and good engineering judgment should be utilized when deviating from the guidance below.

7.10.2. Wall Stems. Requirements for minimum thickness are provided in EM 1110-2-2104. Initially, the wall stem center should be located approximately 2/3 of the distance of the base with from the heel. This can be adjusted as needed to change the weight and resultant location to address the sliding, location of resultant, and bearing capacity performance modes.

7.10.2.1. Tapering. Tapering (battering) of the stem can be used to reduce the concrete volume. It is cost effective for tall walls (> 10' (3 m)) and where walls are used for long reaches. The slope of the taper should be constant regardless of the wall height and located on the landside (Figure 7.6). When transitioning vertically, the base should be allowed to vary with the changing wall height. The height of the tallest wall will control the slope of the taper and top of wall width.

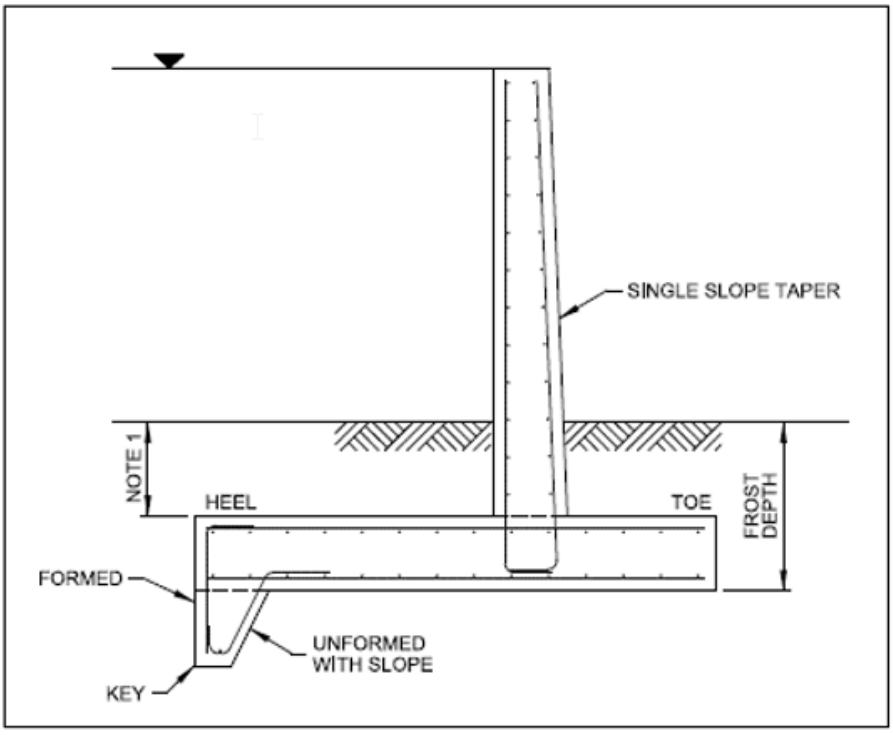

Figure 7.6. Soil Founded Floodwall
(Note 1. Minimum of 1 foot for vegetation growth or depth of riprap plus bedding.)

7.10.2.2. Thickness Transitions. When no taper is used, transitioning in stem thickness is made by holding the vertical face of the wall stem firm and adjusting the landside face accordingly. This type of transition should occur near the expansion joint or point of intersection (PI) of a monolith (Figure 7.7).

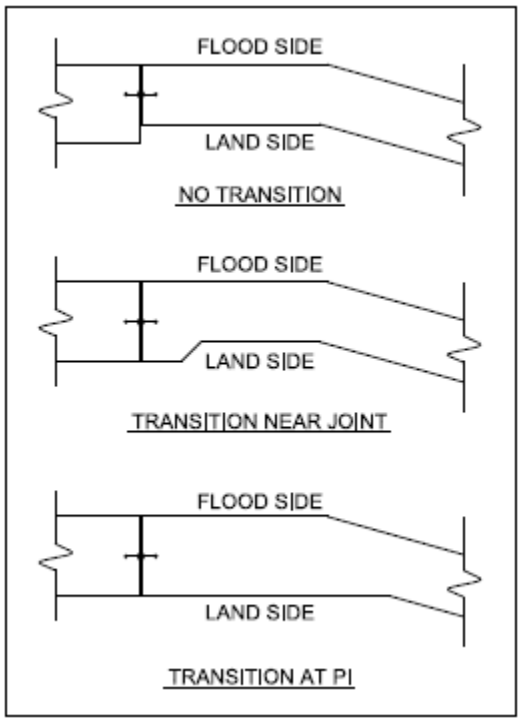

Figure 7.7. Wall Stem Thickness Transitions

7.10.3. Wall Bases.

7.10.3.1. General. Wall base thickness should initially be equal to or greater than the stem thickness at the base. As design progresses, base thickness or concrete strength are adjusted so that shear capacity is fully provided without the use of shear reinforcement.

7.10.3.2. Initial Dimensions. The width of the base can initially be assumed equal to or greater than the stem height plus base thickness. Where wall base widths are controlled by sliding and the resultant location performance modes, the toe is typically minimized in order to maximize the weight of the structural wedge. However, no less than 2 ft. (0.6 m) should be provided in order to support placement of formwork for the stem except for very short walls (less than 5 ft. (1.5 m)). When bearing capacity controls, the toe can be extended to increase the base width while minimizing weight.

7.10.3.3. Depth of Base. There are multiple conditions which determine the depth of the wall base:

7.10.3.3.1. The first condition is frost depth. Wall bases should be placed where the bottom is at or below the frost depth (Figure 7.6). When this is not possible, non-frost susceptible soil can be placed under the base to or beyond the frost depth.

7.10.3.3.2. The second condition is to place the base such that there is enough soil to properly support grass and plantings. For this condition, the top of the base should be located a minimum of one foot below the final ground surface (Figure 7.6). Coordinate this distance with the appropriate landscape architect or other professional entity.

7.10.3.3.3. The third condition pertains to waterside scour typical along rivers. Where riprap is required, the top of the base should be below the riprap and bedding layer.

7.10.3.3.4. The last condition is overtopping scour. Under this condition, the top of the base can be positioned below the scour depth or scour protection can be provided. Keep in mind the correlation between the base depth and base width. Usually, as the base depth increases the base width also increases, even as the sliding resistance and bearing capacity increases.

7.10.3.4. Tapering. Similar to wall stems, tapering the base and reducing reinforcement can be incorporated to minimize costs. Because of the increased complexity of reinforcement and concrete placement, this is very rarely used. Use caution when deciding to taper wall bases and coordinate with industry standard practices. This should not be considered for wall lengths of less than 1,000 ft. (300 m).

7.10.3.5. Keys. Keys are typically used where space constraints limit the width of the base. Where space constraints do not exist, using keys may be cost prohibitive, and if selected, should be compared with widening the base. Keys should be installed at the end of the heel to maximize effectiveness. Shallow keys, less than or equal to 1X where X is the thickness of the base, can be installed in a trench without formwork and should be indicated on the plans. Deeper keys will require formwork to minimize the amount of concrete used. Alternately, formwork can be used on the side of the key, at the edge of the base, but not under the base (Figure 7.6).

7.10.4. Reinforcement.

7.10.4.1. For ease of analysis and construction, try to match the stem and base reinforcement spacing. Be cognizant of the intersection between the stem and base where the reinforcement can get congested. Also be aware of space required at splices and laps. The designer should ensure that space exists for concrete to be adequately placed and consolidated. Coordinate with the materials engineer concerning aggregate size of the concrete mix.

7.10.4.2. Since the stem and base are cantilevers, the bending moment decreases rapidly away from the intersection of the base and stem. As a result, reinforcing bars can be reduced or cut, but caution is warranted. When cutting bars, use an alternating pattern as shown in Figure 7.8. Ensure that the flexural strength satisfies the limit state where the cut is to occur. Do not cut bars where the resulting bar spacing exceeds what is allowed per EM 1110-2-2104. Instead, use smaller bar sizes, but only when analysis results in an approximately 50 percent area reduction in reinforcement. Refer to EM 1110-2-2104 for proper orientation of hooks and temperature and shrinkage requirements.

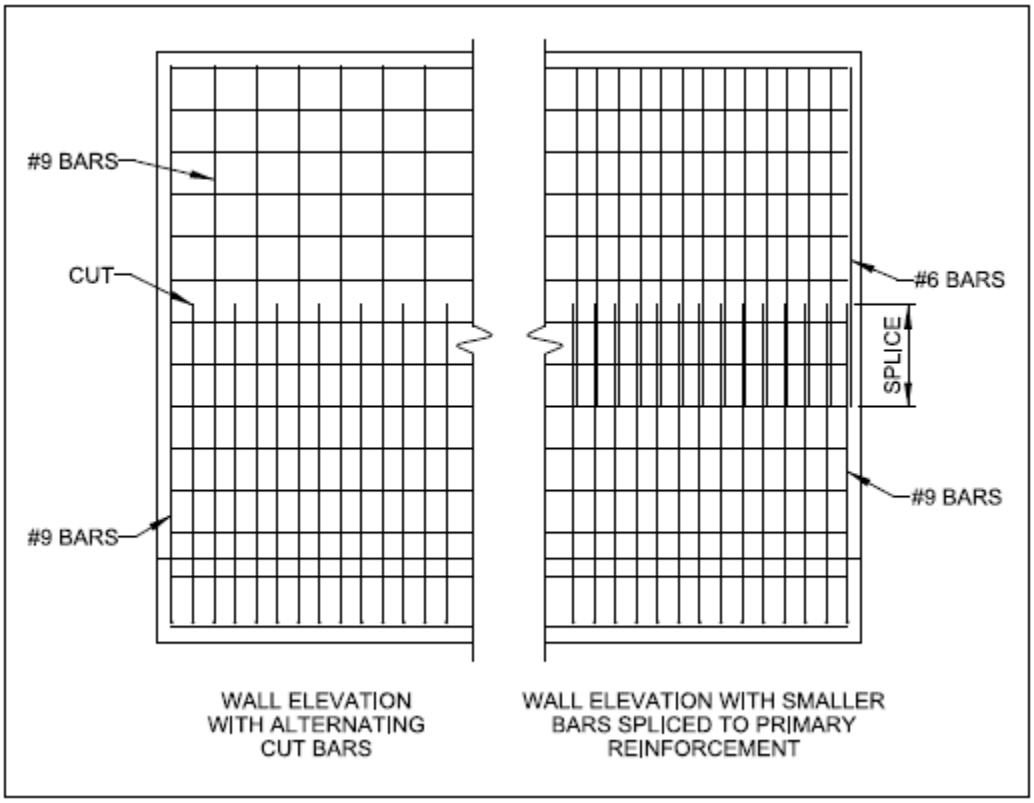

Figure 7.8. Wall Stem Reinforcement Transitions

7.11. Mandatory Requirements.

7.11.1. Walls must meet the requirements of EM 1110-2-2100 for the sliding and location of resultant performance modes.

7.11.2. Anchoring must not be used as a primary means to stabilize new walls.

7.11.3. Bearing capacity factors of safety must meet the requirements of Table 7.1.

7.11.4. A limit equilibrium method that satisfies both force and moment equilibrium, such as the Spencer (1967) method, must be used to assess the factor of safety for global stability.

7.11.5. Factors of safety for global stability must meet or exceed the minimum values in Table 7.2.

7.11.6. Factors of safety for vertical gradient for the internal erosion failure mode must meet or exceed the values shown in Table 7.3.

7.11.7. When a levee system will consist of floodwall/levee composite systems and sheet piling does not fully penetrate the levee embankment, internal erosion beneath the wall and through the levee must be addressed.

Chapter 8
Analysis and Design – Concrete Walls Supported by a Deep Foundation

8.1. Introduction.

8.1.1. This chapter describes the analysis and design of Concrete Walls Supported by Deep Foundations to meet the basic design requirements described in Chapter 4. Site information needed to perform the analysis is described in Chapter 5, and the loads applied in the analysis are described in Chapter 6. Earthquakes effects on failure modes and soil response, including shear strengths, are covered in Chapter 17. This chapter applies to deep foundations consisting of either driven piles or drilled piles and shafts. For simplicity, the term "pile" is sometimes used to apply to both deep foundation types. Example calculations that demonstrate the guidance in this chapter are provided in Appendix E.

8.1.2. Selection of Deep Foundation Type. The selection of the deep foundation system is a joint decision of the geotechnical and structural engineer that considers the site information and construction limitations found in Chapter 5 and 12. For selection of pile or drilled shaft type and the design and analysis of the deep foundation system, refer to EM 1110-2-2906.

8.2. Performance Modes.

8.2.1. As described in Chapter 4, analysis and design to address the general probable failure modes described in Chapter 3 are performed using performance modes. Each failure mode described in Chapter 3 has a corresponding performance mode for analysis and design. Performance modes for deep-founded concrete walls include:

8.2.1.1. Bearing and Stability of Pile or Drilled Shaft (PFM DF-1);

8.2.1.2. Global Stability (PFM DF-2);

8.2.1.3. Internal Erosion (PFM DF-3); and

8.2.1.4. Strength of Structural Elements (PFM DF-4).

8.2.2. Settlement and downdrag, as well as liquefaction and cyclic softening, are evaluated as they may affect the other performance modes or serviceability. Liquefaction and cyclic softening are covered in Chapter 17.

8.2.3. Deep foundations for concrete walls consist of pile groups. The pile groups are typically analyzed using pile group analysis PC software, such as the CASE program, CPGA, or other commercial software. These analyses provide forces in the piles and deflections of the pile group (wall) used to assess stability. These results are used in section 8.3 Bearing and Stability and section 8.7 Strength of Structural Elements. Section 8.3 provides guidance on pile group analysis specific to walls.

8.3. Bearing and Stability.

8.3.1. General. Analysis and design of the piles to provide stability and bearing capacity are performed according to EM 1110-2-2906. For analysis of the pile group, two key assumptions have to be made when performing analysis of concrete walls on deep foundations; rigid vs. flexible base and pinned vs. fixed pile heads. Generally, a rigid base is assumed and analysis is performed utilizing a bracketed approach for the pile head fixity.

8.3.2. Rigid or Flexible Base.

8.3.2.1. The analysis performed by CPGA is of a pile group with a completely rigid base. When the base becomes slimmer relative to the pile size and spacing, the base may start to behave less rigidly relative to the piles. The defining point where the flexibility of the base significantly affects the results of the pile group analysis is dependent on multiple factors, and therefore difficult to definitize. When the base is determined to behave flexibly it must be analyzed using methods that can include the stiffness of the wall base, such as finite element programs. Refer to EM 1110-2-2906 for additional information.

8.3.2.2. The determination of the analysis type is usually based on the forces that are computed in the piles. For many walls, an assumption of a rigid base will result in a conservative computation of pile loads, even if the base is somewhat flexible. Most concrete T-wall monoliths can be designed with a rigid assumption and result in adequate design pile loads.

8.3.2.3. However, a rigid base assumption may not be conservative in some cases. Walls with very wide, thin, bases supported by multiple rows of piles, may require a flexible base analysis to adequately determine pile loads. Also, wall monoliths with varying geometry, stiffness, and load application, such as closure monoliths, are more likely to require a flexible base analysis to ensure that maximum pile loads are properly identified. The determination must be made on a case-by-case basis.

8.3.3. Pile Head Fixity.

8.3.3.1. General. There are three types of pile head fixity conditions for deep-founded floodwalls: pinned, fixed, and partially fixed. Conditions affecting fixity include embedment depth, edge distance, and use of anchors.

8.3.3.1.1. Pinned Condition. The pile is free to rotate through special detailing of the connection to the base. There is no bending moment in the pile at the wall base. This results in more lateral displacement of the wall systems.

8.3.3.1.2. Fixed Condition. There is no rotation of the pile relative to the base. The bending moment capacity of the connection of the pile to the base is greater than the moment capacity of the pile or the largest load that can be encountered. The maximum moment in the pile will occur at the base of the wall. The fixed condition reduces lateral displacement of the wall system but increases bending moments in the pile. It also requires increased pile embedment and usually increased footing thickness to achieve.

8.3.3.1.3. Partially Fixed Condition. The bending moment capacity of the connection of the pile to the base is less than the moment capacity of the pile or the largest load that can be encountered. The pile will act as fixed to the wall base until the loads increase enough that concrete in the base crushes and the anchorage fails, allowing rotation. There are no standard methods for calculating this limit.

8.3.3.2. Bracketed Analyses. Unless designed specifically to be fully pinned or fixed as described in the paragraphs below, piles and shafts should be assumed to be partially fixed. The moment capacity of the pile to base connection is not calculated. Bracketed pile group analyses are performed assuming pinned pile heads and then fixed pile heads. Performance mode requirements are evaluated for both conditions. This typically results in a minimum embedment depth and required footing thickness. In addition, it requires no pile head treatments to achieve a fixed or pinned condition.

8.3.3.3. Pinned or Fixed Head Design. If site conditions limit the ability to perform a bracketed analysis, the pile heads can be designed and detailed according to their fixity condition, as described in the following paragraphs.

8.3.3.3.1. Pinned Head Condition. For the pinned condition, the pile is free to rotate within the cap and no bending moment is transferred between the wall base and the pile. When it is necessary to design the pile head as pinned, the connection to the wall base is designed and detailed such that the pile head is permitted to rotate. See section 8.8.7.3 for information on design for the fixed condition. An example of where a floodwall will have a pinned pile head condition is when battered piles are necessary to resist large lateral loads in combination with settlement.

8.3.3.3.2. Fixed Head Condition. For the fixed condition, the connection of the pile to the base has sufficient strength under all loads that it does not rotate relative to the wall base. For a fixed head condition, the connection to the wall base is designed and detailed to transfer bending moment from the pile into the base. This can be achieved by embedding the pile or drilled shaft deep into the wall base or by using anchors to resist head rotation. See paragraph 8.8.7.4 for information on design for the fixed condition.

8.3.3.3.3. Fixed Head Uses. An example of where a floodwall may be designed with a fixed head condition is when site constraints do not permit battered piles or additional pile rows, and large lateral loads exist. Also, levee transition walls where settlement is anticipated are typically designed with vertical piles and fixed pile heads. Another reason to consider fixed pile heads is economics. The cost of extra footing depth and potentially stronger cap and pile for the fixed condition would need to be weighed against the extra number of piles required by pinned analysis to satisfy the same requirements.

8.3.4. Sheet Pile Cutoff Walls. Typically, sheet pile cutoff walls are not relied upon to contribute to the bearing and stability of the wall. However, it is acceptable to utilize cutoff walls to provide axial capacity provided it is structurally connected to the base and the soil-sheet pile capacities have been properly computed according to EM 1110-2-2906.

8.3.5. Deflection.

8.3.5.1. In a pile group analysis, both vertical and horizontal deflections of the wall are calculated. Vertical deflections are related to the pile bearing capacity and wall rotation. Usually piles that provide adequate bearing capacity are adequate for vertical deflection. Wall rotation must be considered, and this may create deflection at the edge of the footing or top of wall that is excessive. This is usually controlled by limiting vertical pile deflection.

8.3.5.2. Deep foundations are rarely limited in lateral movement by stability or strength. The soil allows a pile to deflect laterally and return to its original position until it fails structurally. This is almost always after an excessive amount of deflection. Therefore, lateral movement of the wall is usually controlled by serviceability deflection limits, rather than by strength limit states.

8.3.5.3. Recommended deflection limits for free standing walls are shown in Table 8.1. These limits apply to walls, such as floodwalls and earth retaining walls, with no other structures nearby. For walls connecting to more rigid structures or in situations where deflection of the wall may affect another facility, the designer will need to consider compatible deflection limits.

Table 8.1
Recommended Deflection Limits for Free Standing Walls (Measured at the Pile Head)

	Deflection, in. (cm)	
Load Category	Vertical	Horizontal
Usual	0.5 (1.3)	.5 (1.3)
Unusual	0.75 (1.9)	0.75 (1.9)
Extreme	1.0 (2.5)	1.5 (3.8)

8.3.5.4. Table 8.1 provides recommendations for deflection limits at the pile head. Deflection at the top of the wall must also be considered. This may be important where the monolith structure stiffness changes, such as monoliths at changes in alignment, where the wall ties into a stiffer structure, or where movement at the top of wall may affect adjacent facilities or serviceability.

8.3.5.5. Managing Deflection. Joints and waterstops must be designed to accommodate expected differential deflections (Chapter 12). Wall batters are sometimes applied on the visible side of the wall so that deflection is less visible. Walls calculated to have excessive stem displacement can be stiffened with additional wall thickness or by the use of counterforts or buttresses. Where relative movement of the pile foundation is excessive, additional piles may be needed to reduce deflections. Using battered piles, or increasing the batter of piles, can help decrease lateral deflections.

8.4. Global Stability.

8.4.1. The global stability performance mode is used to assess whether the soil mass around the wall may translate or rotate in the absence of structural support. Two cases of potential global stability failure need to be checked for pile-founded walls: (i) a deep failure surface that passes below piles; and (ii) a deep failure surface that passes through the piles, assuming no anchoring support from the piles. Circular slip surface passing below foundation piles, as well as below the pile-founded wall but through the piles, are shown in Figure 8.1. The slope stability analyses for failure surfaces that pass through piles (ii) do not include water, soil, or surcharge loads acting directly on the structure. That is because these loads are presumed to be carried by the piles to deeper soil layers.

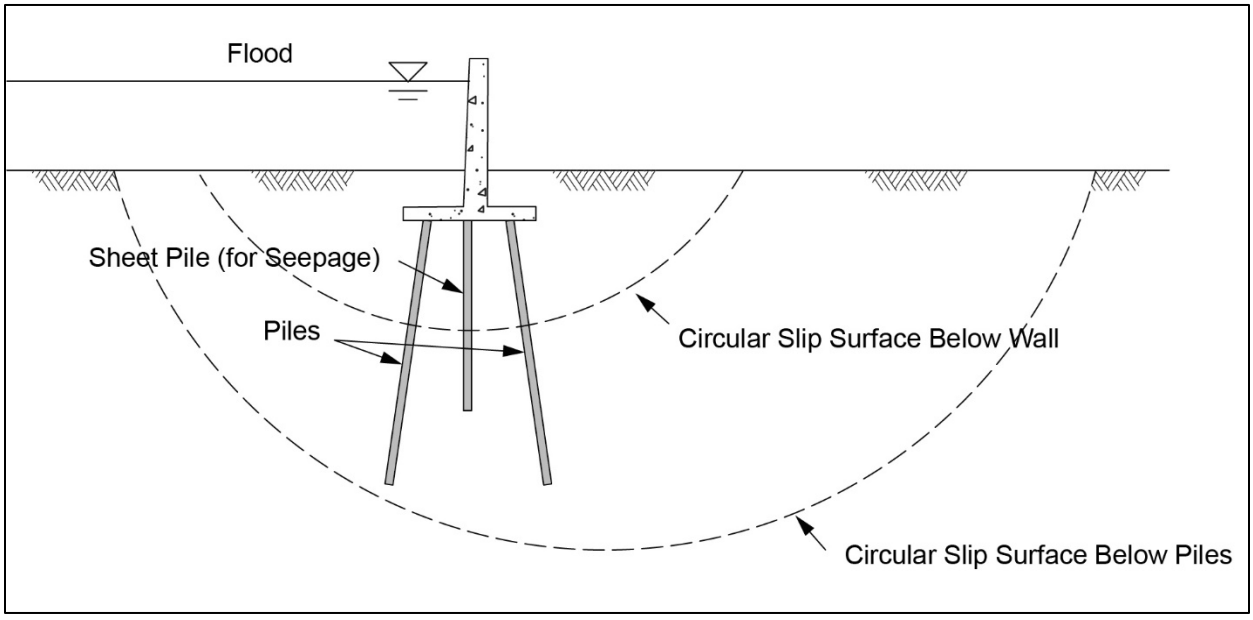

Figure 8.1. Illustration of Potential Slip Surfaces for Global Stability Analysis of Pile Supported T-Wall

8.4.2. Global stability analysis needs to be assessed for all relevant loading cases (Chapter 6), using appropriate combinations of strength (Q, R, or S, Chapter 5), and seepage conditions (Chapter 6). It is typically appropriate to perform multiple global stability analyses for each load case using the bracketed approach for strength and seepage. Potential failure along circular, non-circular block, or general non-circular potential slip surfaces should be considered in the analyses. See EM 1110-2-1902 and EM 1110-2-1913 for further guidance on analysis methods and selection of soil strength and seepage conditions for various loading conditions. Factors of safety on critical slip surfaces when assuming no structural anchoring resistance must exceed the minimums in Table 8.2.

Table 8.2
Minimum Factors of Safety for Global Stability

	Site Classification		
Load Category	Well Defined	Ordinary	Limited
Usual	1.4	1.6	3.3
Unusual	1.3	1.5	3
Extreme	1.1*	1.4*	2.3
*For MDE (and MCE) earthquake, seismic global stability and post-seismic performance are evaluated according to Chapter 17.			

8.4.3. If the minimum requirements in Table 8.2 are not met, steps must be taken to increase the factor of safety above the required minimums. The first choices to do so should be realigning the wall, improving the soil, and/or changing geometry of the surrounding ground, such as adding a berm. If none of these measures is practical, the wall and piles can be utilized to provide an adequate factor of safety for global stability. A procedure to perform global stability analysis and design a pile group to resist unbalances loads is provided in Appendix I.

8.5. Internal Erosion. The internal erosion performance mode for pile-founded walls is similar to shallow-founded walls. The formation of a waterside gap, evaluation methods, and seepage control measures for deep-founded walls are as described in section 7.7. Unlike shallow-founded walls, a sheet pile cutoff should be installed in pile-founded walls in case of settlement of the soil between the load-carrying piles. A positive cutoff must be provided to prevent erosion of soil through the resulting gap between the base of the wall and top of foundation soils. If a large amount of soil is expected to be lost due to internal erosion, this zone should be modeled as an unsupported length when performing pile group analysis. Refer to EM 1110-2-2906 for further guidance. Minimum factors of safety for internal erosion must meet the requirements of Table 7.3.

8.6. Settlement and Downdrag.

8.6.1. General.

8.6.1.1. There are two types of settlement related to a deep-founded wall. One is due to settlement of the piles under loading if they are founded in a compressible soil. See EM 1110-2-2906 for more information on this type of settlement.

8.6.1.2. The other type of settlement is from compression of the soil under the wall. Settlement of soil under a wall relative to the wall and piles can cause several problems. Skin friction on the pile can cause settlement of the pile and structure as a whole. It can also increase the vertical dead loads on the pile sufficiently to cause structural failure. Skin friction on sheet pile cutoff walls can pull them out of the wall footing and add to forces in the wall and piles. In addition, settlement of the soil around battered piles can create bending moments that can exceed the structural capacity of the pile.

8.6.2. Allowable Settlement. The tolerable amount of settlement of the wall is determined on a case-by-case basis. The main concerns are settlements that affect serviceability, differential settlement across joints and to adjacent structures, and lowering of the top of the wall. The top of the wall can be increased to account for settlement. Walls for which settlement and movement may affect serviceability require a revision of the foundation. This could be increasing the number of piles or driving them deeper. The same is true if differential settlement exceeds what the joints or connections to other structures are designed to handle.

8.6.3. Pile Downdrag.

8.6.3.1. Negative skin friction is the downward acting shear stress around the sides of a pile caused by settlement of the soil relative to the pile. Downdrag loads result from the accumulation of negative shaft friction. Downdrag, the downward movement or settlement of the pile or pile group, may result from the accumulation of the friction into drag loads.

8.6.3.2. Fellinius' Method (Fellenius 2004, 2019) evaluates the effects of negative skin friction on a pile foundation by determining an equilibrium condition of the pile loads and resistances. Pile loading results from dead (nontransient) loads at the pile head increasing with depth due to pile shaft friction. Pile resistance results from end bearing at the pile base increasing with height above the pile tip due to pile shaft friction. The equilibrium condition where loading equals resistance is known as the neutral plane. Pile unit end bearing and shaft friction are based on methods within EM 1110-2-2906.

8.6.3.3. This equilibrium condition is then used to assess the pile settlement. The approach assumes that the positive and negative shaft frictions are both fully mobilized, unit values are the same at a given depth, the pile toe resistance is fully mobilized, and the length of the transition zone is not considered. The neutral plane is considered the elevation where an equilibrium exists between pile loads (including negative shaft friction) and resistances. In a pile group, not all piles will be subject to the same level of drag forces, and it is conservative to use drag forces determined for a single pile.

8.6.3.4. Settlement for the pile should be determined at the neutral plane. Settlement of the pile or pile group is performed according to EM 1110-2-2906. The settlement, including elastic compression of the piles, should be less than established tolerable levels based on serviceability requirements. Where settlement is expected, the constructed wall height may need to be increased in order to maintain a required minimum elevation over the life of the wall.

8.6.3.5. Sheet Pile Cutoff Walls. Since sheet pile cutoffs are normally above the neutral plane of the pile group, the drag load resulting from negative shaft friction can be assumed to be equal to the pull-out capacity of the sheet pile.

8.6.3.6. Downdrag Loads in Load Combinations. Downdrag loads affecting piles or sheet pile cutoffs should be applied only with permanent loads and should not be applied in combination with hydrostatic and other temporary or dynamic loads. This is because the temporary loads create movements in the piles relative to the surrounding soil that overcomes the static friction forces from downdrag. The loads are not additive. Downdrag loads should be considered to be usual loads unless they are combined with upper bound settlement estimates of very low probability.

8.6.4. Settlement and Induced Bending of Battered Piles.

8.6.4.1. General. Walls with battered piles may be subject to downdrag loads. When a pile is battered, a component of the total downdrag load on the pile acts normal to the pile axis (Figure 8.2). The upper part of the pile is loaded by the settling soil, while lateral movement in the pile is prevented at the connection to the wall and by soil layers at depth with less or no settlement. The pile then becomes a beam resisting settlement that spans between the bottom of the wall and lower soil layers. Physical model studies that demonstrate the behavior are documented in Shibata (1982), Takahashi (1985), and Kokkali et al. (2018). The bending moments due to downdrag can be large enough to influence the design of the piling system used to support the wall.

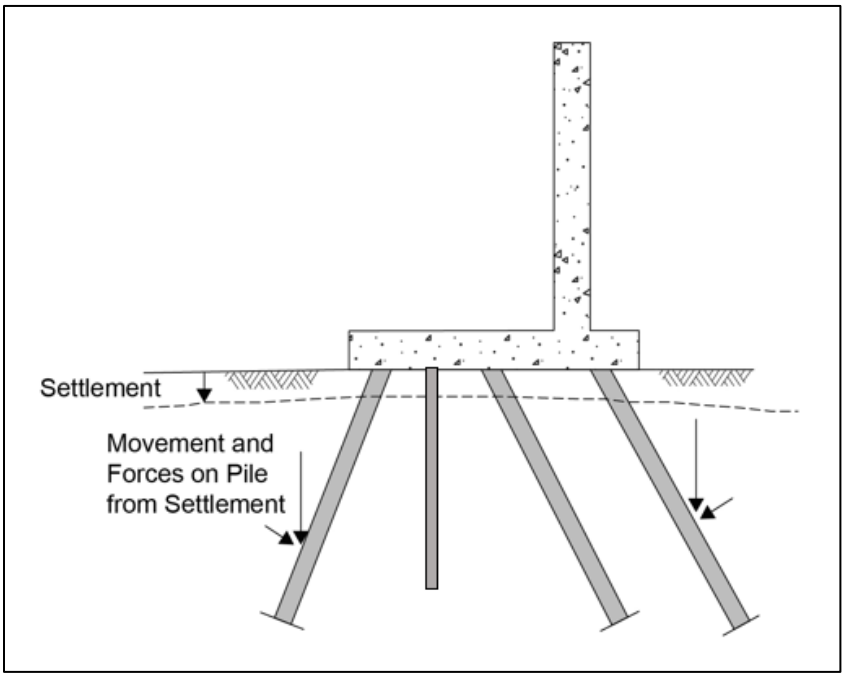

Figure 8.2. Forces on Batter Piles from Soil Settlement

8.6.4.2. Analysis. For walls constructed in soils where more than 2 inches of 1D settlements at the ground surface are calculated in the area of the floodwall (neglecting influence of piles), the first choice should be to avoid potential problems from bending of battered piles. Using vertical, rather than battered piles, and/or the use of preload to reduce settlement can reduce or eliminate the potential for creating bending moments in the piles from soil settlement. One or both of these measures are often used at levee to floodwall transitions. Concrete battered piles should not be used when settlement induced bending moments are a possibility.

8.6.4.3. If the use of battered piles in settling soils cannot be mitigated, it is possible to design for this condition using full numeric analysis. However, methods to do so are complex and contain uncertainty with soil constitutive properties and the interaction of the soil with the piles in these situations. Examples of full numeric analysis of settlement under battered H-pile founded walls constructed on levees in Louisiana can be found in Reeb (2015) and Johnson et al. (2017).

8.6.4.4. Structural Analysis. Unlike vertical piles loaded by downdrag, bending moments in battered piles from soil settlement are additive to forces that may be applied to the piles from other loads. Settlement induced bending moments is combined with other forces from other loads according to section 6.18. The load category that the bending moment from soil settlement is assigned is based on an assessment of the probability of settlement induced loading.

8.6.4.5. Settlement induced bending moments applied as principal loads should be based on upper bound estimates of settlement. Settlement induced bending moments applied as companion loads with other principal loads (such as flood load) should be based on expected soil settlement. Strength design of the combined bending moments and coincident axial loads is performed according to EM 1110-2-2906.

8.7. Strength of Structural Elements.

8.7.1. General. Reinforced concrete walls are designed according to EM 1110-2-2104. For concrete gravity walls see Chapter 7. The strength and serviceability requirements for the various deep foundation elements are provided in EM 1110-2-2906. For wall components that may be comprised of structural steel or aluminum, see Chapter 7. See section 12.6 for information on corrosion protection of steel piles and sheet piles.

8.7.2. Internal Structural Strength. In addition to the critical shear sections identified in EM 1110-2-2104, shear is also checked, as shown in Figure 8.3. Use factored global pile reactions. For piles in tension, the shear plane is measured from the center of the top reinforcement mat to the corner of the pile closest to the wall stem face, vertically. Similarly, for piles in compression, the shear plane is measured from the top of the base to the bottom mat of reinforcement or corner of pile closest to the wall stem face, whichever is less. Check punching shear when the pile clear spacing exceeds the shear perimeter of the pile.

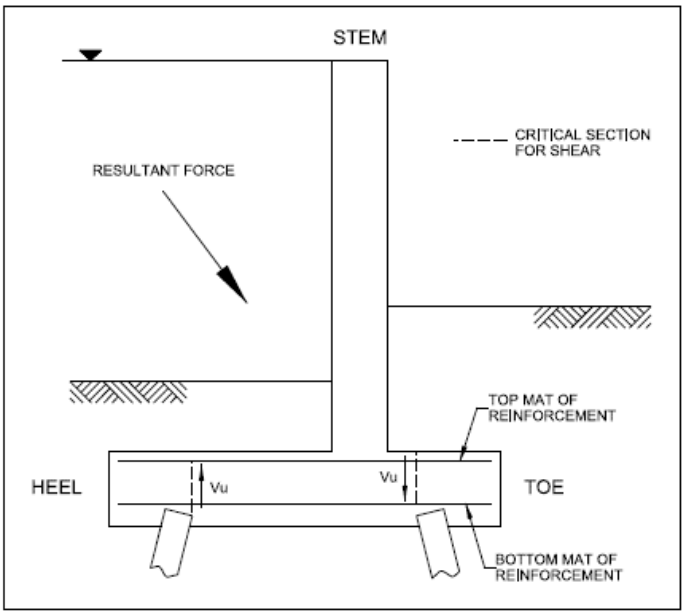

Figure 8.3. Critical Sections for Shear in Pile-Founded Cantilever T-Type Walls

8.7.3. Pile Strength. Pile strength is determined according to EM 1110-2-2906. In addition to checking pile strength for design loads, use pile-driving loads to check strength when the design results in high pile compression. Localized buckling, just under the driving head, is a common occurrence and can be mitigated structurally or by either limiting the impact energy or by cutting off the damaged pile head.

8.7.4. Pile Connections to the Wall Base. The connection between the wall structure base and the embedded piles are analyzed using the factored loads and load combinations from EM 1110-2-2104. Typical concrete strength checks include breakout, side-face blowout, pryout, and bearing. Typical steel anchor strength checks include tension yielding and shear and must satisfy the strength requirements of ANSI/AISC 360-16 and EM 1110-2-2104.

8.7.4.1. Edge Distance. The distance from the center of the pile to the concrete edge must be adequate for the concrete to resist the maximum factored horizontal force determined by analysis, but not be less than 1.5 pile diameters. When space constraints limit the ability for the pile to achieve the minimum edge distance required to resist the horizontal pile reactions, confining reinforcement is designed for concrete shear, breakout, and pryout.

8.7.4.2. Tension Anchors. Tension anchors are provided for each pile row exhibiting tension loads from analysis and designed based on the factored reactions from pile group analysis. Locate the tension anchors in relation to the pile head fixity condition designed. If designed using a bracketed analysis, locate the anchors for ease of fabrication and construction. Following is additional guidance for use of tension anchors.

8.7.4.2.1. Pile reactions will vary with load case and the reactions calculated by group analysis can be uncertain. Therefore, provide tension anchors if the pile compression reaction for a particular load case is less than 10 percent of the reaction from the load case with the highest compression reactions in that pile. For example, if load case 11 exhibits the maximum compression load for pile 6 of 100.0 kips (444 kN) and load case 1 exhibits a load for pile 6 of 9.9 kips (44 kN), then provide a tension anchor.

8.7.4.2.2. It is recommended that anchors be extended to the top mat for piles exhibiting high tension loads in normal footings. For small to moderate tension loads or in thick footings, design hook length per ACI. Refer to Figure 8.4 and Figure 8.5 for examples.

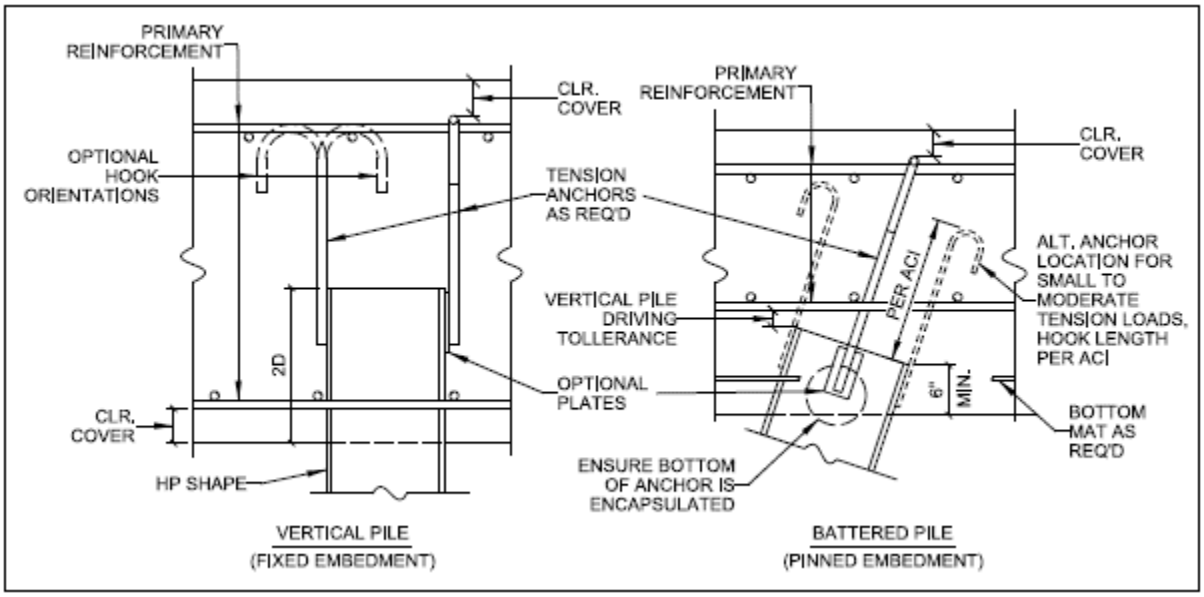

Figure 8.4. Hooked A706 Reinforcement Anchors on Steel HP-Shape Pile

8.7.4.3. Embedment Depth. A minimum of 6″ (15 cm) embedment, measured from the center of the pile to the bottom of the base for vertical piles, should be provided. When batters are used, the lower edge of the pile top is embedded a minimum of 6″ (15 cm). Refer to Figure 8.4 for examples.

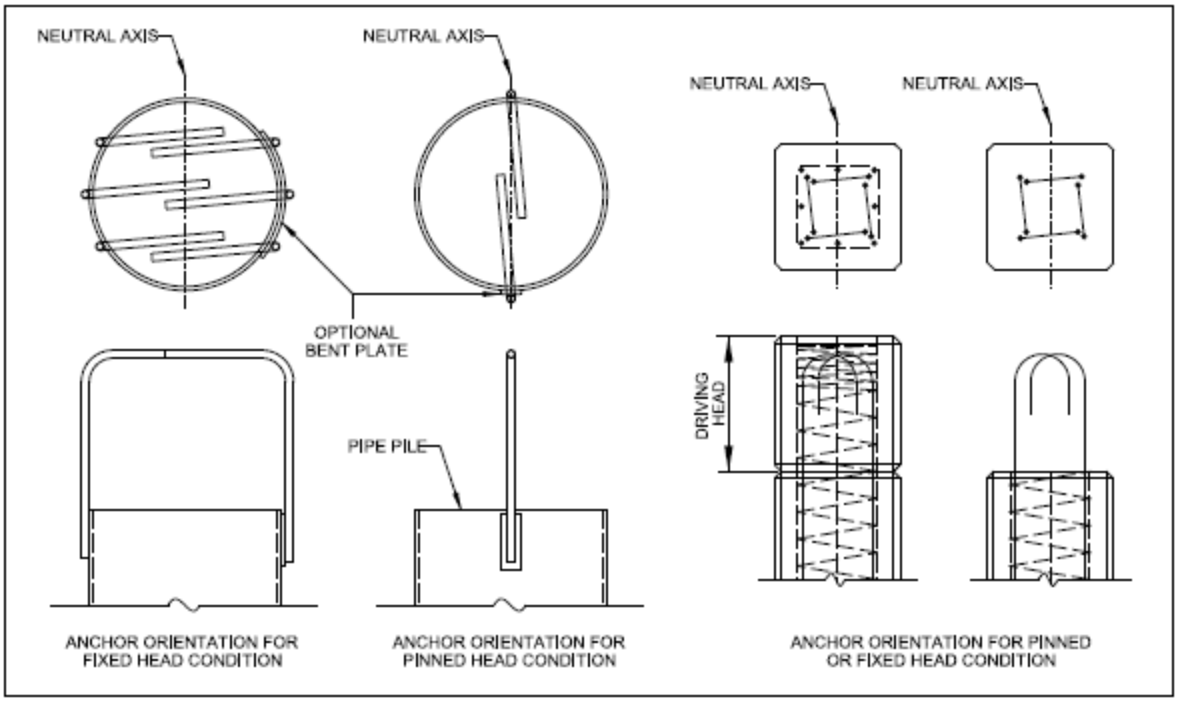

Figure 8.5. General Reinforcement Anchor Orientations for Steel Pipe & Precast Prestressed Concrete Pile

8.8. General Practices.

8.8.1. District or Local Requirements. The guidance provided herein should be used in conjunction with local USACE district practice. Where conflicts occur, the design engineer will utilize a risk-informed approach to determine most appropriate guidance to use.

8.8.2. Initial Wall Geometry. The following guidance is provided to enable the design engineer to establish the initial wall geometry in order to minimize the number of design iterations required to develop the final wall geometry. The guidance provided are for typical loading conditions. Caution using this guidance when large companion loads exist such as wave and impact. Use of this guidance is not mandatory and good engineering judgment should be utilized when deviating from the below guidance.

8.8.2.1. Wall Stem. The thickness of the wall must meet the requirements in EM 1110-2-2104. If tapering the wall stem, use a single slope taper from the stem base to the top of wall. Typically, the taper is located on the landside of the stem. Initially locate the stem center approximately 2/3 from the heel.

8.8.2.2. Wall Base. The initial base thickness can be assumed the stem thickness plus the pile embedment depth and vertical driving tolerances. The initial width of the base should be similar to the stem height and fall within these ranges: min. width = roundup ((n–1)*3B+3B) to max width = roundup((n–1)*8B+5B) where "n" is the number of pile rows. The min and max widths coincide with the pile group reduction effects which should be considered in the initial development of the wall base geometry.

8.8.3. Cutoff Wall. Initially locate the cutoff wall centered between pile rows. When more than two pile rows exist, locate the cutoff wall centered between pile rows closer toward the heel. If piles are battered, locate the cutoff wall between the rows of opposing batters.

8.8.4. Wall Origin for Foundation Analysis. When developing wall loads for pile foundation analysis, it is important to maintain consistency in the location of the origin and utilize the right hand rule for axis direction and rotation. Ideally, it is recommended to follow the axis direction and rotation utilized by the analysis program. Also, for symmetric walls, locating the origin at the bottom corner of the heel centered on the monolith, will minimize potential sign convention issues. This is illustrated in Figure 8.6. For non-symmetrically shaped monoliths, use engineering judgment in determining ideal wall origin location.

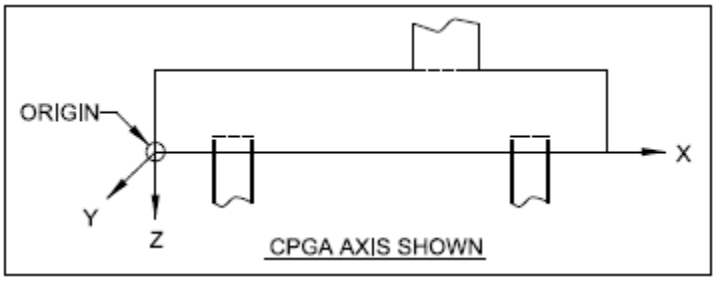

Figure 8.6. Wall Origin Location Using CPGA Axis

8.8.5. Change in Alignment Monoliths. Sometimes referred to as point of intersection (PI) monoliths, should have a minimum 5 ft. (1.5 m) extension past the corner, but not less than two full sheet pilings and at least one row of bearing piles. Refer to section 12.4.2 for additional information.

8.8.6. Resultant Force Check. This is a suggested check to see if the wall geometry and pile foundation efficiently supports the corresponding loading. Once the initial wall geometry has been developed, the loads are then determined and the resultant force location established. The resultant force line of action should fall close to the elastic center of the piles. The less eccentricity the more efficient the pile layout and geometry are. Use of this check is only applicable when at least one row of piles is battered and the base is rigid. Refer to Appendix E for an example.

8.8.7. Pile Head Anchor Detailing. When analysis satisfies the limit states for both pinned and fixed pile head conditions, no special detailing is necessary outside of what is shown in Figure 8.4 and Figure 8.5. However, if the designer wishes the pile head connection to act more like a true pin, then the construction drawings should adequately show the connection as designed. Such details can consist of, but not limited to, showing compressible bearing type pads attached to the pile head with callouts providing the salient characteristics of the pad.

8.8.7.1. Precast Prestressed Concrete (PPC) Piles. Anchors can be precast in the driving head, as shown in Figure 8.5. After pile driving is completed, the concrete is removed from the driving head exposing the primary reinforcement that will extend into the base slab. Alternatively, the pile can be designed with grout pockets for anchors to be added after driving.

8.8.7.2. Steel Piles. Recommend using weldable rebar, ASTM A706, utilizing hook lengths and bends according to ACI 318. Where large tension loads exist, hook anchors around top mat of reinforcement as shown in Figure 8.4. The anchors can be welded to the pile directly or to plates in the fabrication shop for better quality control, as shown in Figure 8.4 and Figure 8.5.

8.8.7.3. Pinned Connections. There are no standardized procedures for designing fully pinned piles. One method to achieve a pinned connection method is to attach compressible rubber pads to the contact zones of the pile head. If a tension anchor is required by analysis, it should be located close to the pile head neutral axis.

8.8.7.4. Fixed Connections. There are no standardized procedures for designing fixed piles. Advanced modeling or testing can be performed to determine the moment transfer of the connection. Two published studies that examined pile bending moment transfer and embedment depth can be utilized. For steel HP shapes and pipe piles, an embedment depth of 2 times the pile depth or diameter was found to develop the full moment capacity of the pile in Fernando et al. (1984). For square, precast, prestressed concrete piles smaller than 36″ (91 cm), a minimum embedment depth of the width of pile or 12″ (30 cm), whichever is greater, was found to provide full bending moment transfer in Harries and Petrou (2001).

8.9. Mandatory Requirements.

8.9.1. Minimum factors of safety for Global Stability must meet the requirements of Table 8.2.

8.9.2. Minimum factors of safety for Internal Erosion must meet the requirements of Table 7.3.

8.9.3. Typical steel anchor strength checks include tension yielding and shear and must satisfy the strength requirements of ANSI/AISC 360-16 and EM 1110-2-2104.

8.9.4. The distance from the center of the pile to the concrete edge must be adequate for the concrete to resist the maximum factored horizontal force determined by analysis, but not be less than 1.5 pile diameters.

Chapter 9
Analysis and Design – Cantilever Pile Walls

9.1. Introduction.

9.1.1. Cantilever pile walls are vertical walls that derive their support solely from lateral earth pressures, as described in Chapter 2. Because cantilever walls derive their support solely from passive resistance of the foundation soils, they are very sensitive to the strength, stiffness, geometry (elevation and topography), water level, and drainage of the soils on the resisting side of the wall.

9.1.2. This chapter describes analysis and design of cantilever pile walls to meet the general design requirements described in Chapter 4. Site information needed to perform the analysis is described in Chapter 5 and the loads applied in the analysis are described in Chapter 6. Earthquakes effects on failure modes and soil response, including shear strengths, are covered in Chapter 17. Example calculations that demonstrate the guidance in this chapter are provided in Appendix F.

9.1.3. This chapter primarily describes design of continuous cantilever pile walls, commonly known as I-walls, which are typically constructed of steel sheet piling. For walls constructed with PVC sheet piling, see Appendix B for additional guidance.

9.1.4. Soil to Pile Gap in Analyses. Under water loading, as a cantilever pile deflects, a gap may form on the waterside between the pile and soil. The gap is associated with undrained soil conditions. A gap can be thought of as a tension crack and is generally developed to a depth of about $2s_u/\gamma'$, (where s_u is the soil undrained strength and γ' is the buoyant soil unit weight) but up to about $4s_u/\gamma'$ when there is a head of water above the gap.

9.1.5. The gap may be closed above the kickback (or pivot) point near the bottom of the sheet pile where passive pressures exist to balance wall rotation. However, it is common to assume that the gap extends to at least this pivot point, depending upon soil strength and unit weight as discussed later. The gap is illustrated in Figure 9.1. Incorporation of the gap in analyses is found in the description of each failure mode described below.

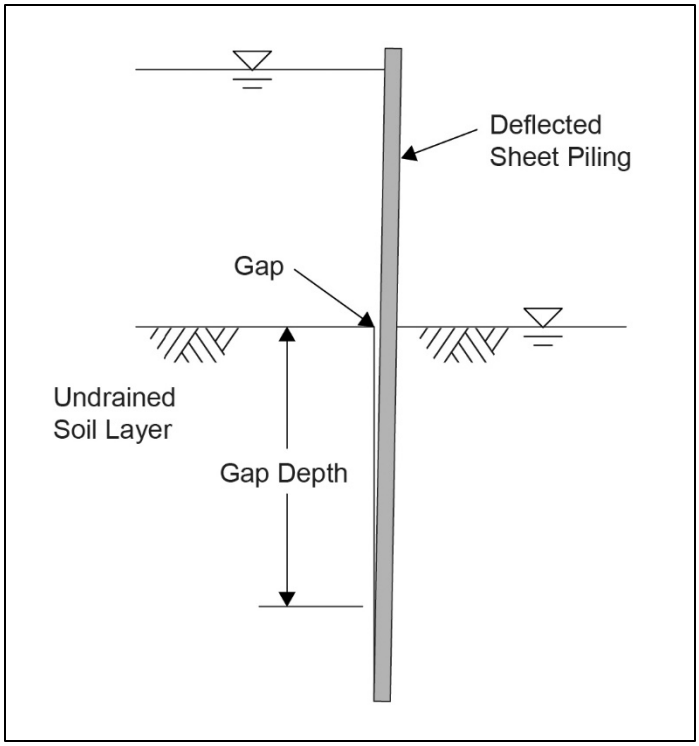

Figure 9.1. Illustration of Gap for Floodwalls in Undrained Cohesive Soil

9.1.6. Short Versus Long Piles.

9.1.6.1. The piles in a cantilever pile wall may be considered long piles or short piles. This depends on the embedded length of the pile, the stiffness of the soil or rock, and the stiffness of the pile. Piles are considered long if the applied lateral load at the head has no effect on the tip (the tip does not rotate or translate). Short piles behave rigidly and exhibit relatively no curvature (the tip rotates and translates). Methodology for determining whether piles are long or short is provided in EM 1110-2-2906.

9.1.6.2. The design procedures in this manual are for short piles because continuous cantilever pile walls usually behave as short piles. Cantilever pile walls with long piles are designed as laterally loaded piles according to EM 1110-2-2906.

9.1.7. Continuous Versus Discrete Pile Walls. The guidance in this manual is for continuous pile walls. For discrete pile walls, such as post and panel or soldier pile walls, retained loads are resisted by spaced piles. The ultimate passive soil capacity on spaced piles is different from continuous pile walls. Discrete pile walls with long piles (such as those socketed into rock) are designed according to EM 1110-2-2906. Discrete pile walls with short piles will be analyzed and designed with consultation and approval by CECW-EC.

9.2. Performance Modes.

9.2.1. The analysis and design to address the general potential failure modes described in Chapter 3 are performed using performance modes described in Chapter 4. Earthquakes effects on failure modes and soil response, including shear strengths, are covered in Chapter 17. Each failure mode described in Chapter 3 has a corresponding performance mode for analysis and design. Performance modes for cantilever pile walls include:

9.2.1.1. Rotational Stability (PFM CP-1);

9.2.1.2. Global Stability (PFM CP-2);

9.2.1.3. Internal Erosion (PFM CP-3); and

9.2.1.4. Strength of Structural Elements (PFM CP-4).

9.2.2. Settlement, deflection, liquefaction, and cyclic softening are also evaluated as they may affect the other performance modes or serviceability. Liquefaction and cyclic softening are covered in Chapter 17.

9.2.3. The rotational failure mode is typically the controlling stability performance mode for a cantilever pile wall. For some conditions, global stability or a mixture of global stability and rotation failure modes may occur. These typically occur for walls with a soft lower layer below stiffer upper layers, such as a compacted clay levee on a soft foundation or a site with layers of overconsolidated clays over normally consolidated clays. Global stability concerns are more likely in these conditions if there are high seepage pressures creating very low effective vertical soil stresses on the resisting side of the wall.

9.3. Rotational Stability.

9.3.1. General. Lateral soil and/or water pressures exerted on the wall tend to cause rigid body rotation of a cantilever wall as illustrated in Figure 9.2. This type of failure is prevented by adequate penetration of the piling in a cantilever wall. The wall rotates about a point near the tip of the wall. Equilibrium is achieved by a balance of water pressure and of active and passive soil pressures that depend on the wall deflection.

9.3.2. Forces. Driving loads are from the retained soil or water (flood) force. Resisting pressures are the passive soil pressures near the ground surface on the resisting side of the wall and near the tip of the sheet pile on the loaded side of the wall. The pressures on both sides of the wall are computed using soil pressure equations. The point of rotation (see Figure 9.3) is the intersection point that provides force and moment equilibrium.

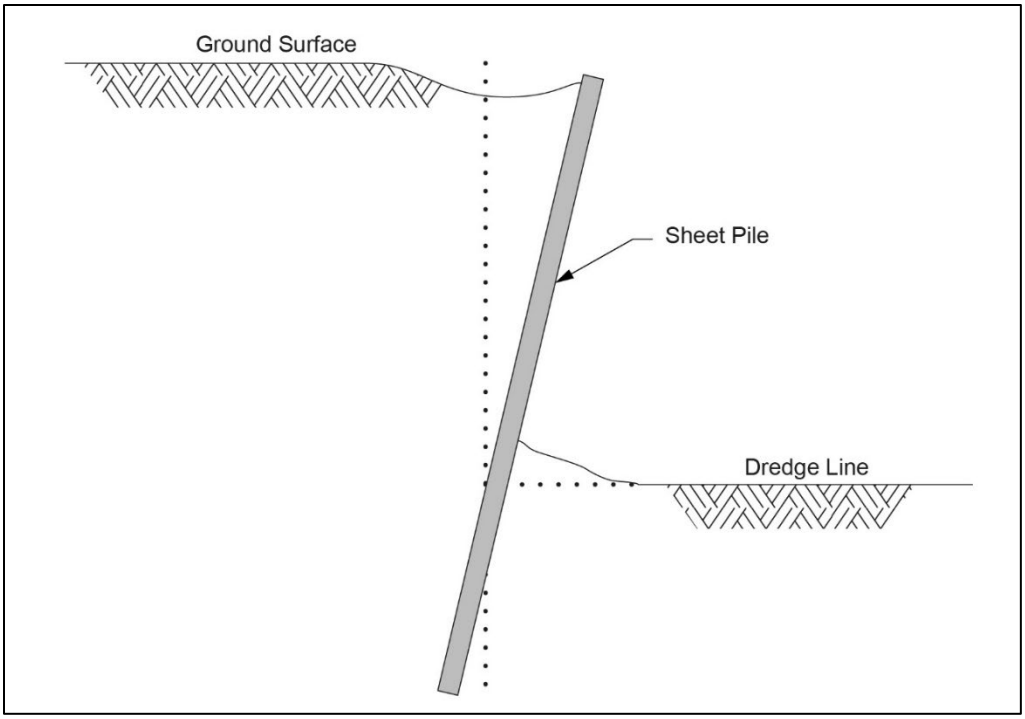

Figure 9.2. Rotational Failure Due to Inadequate Penetration for a Cantilever Pile Wall

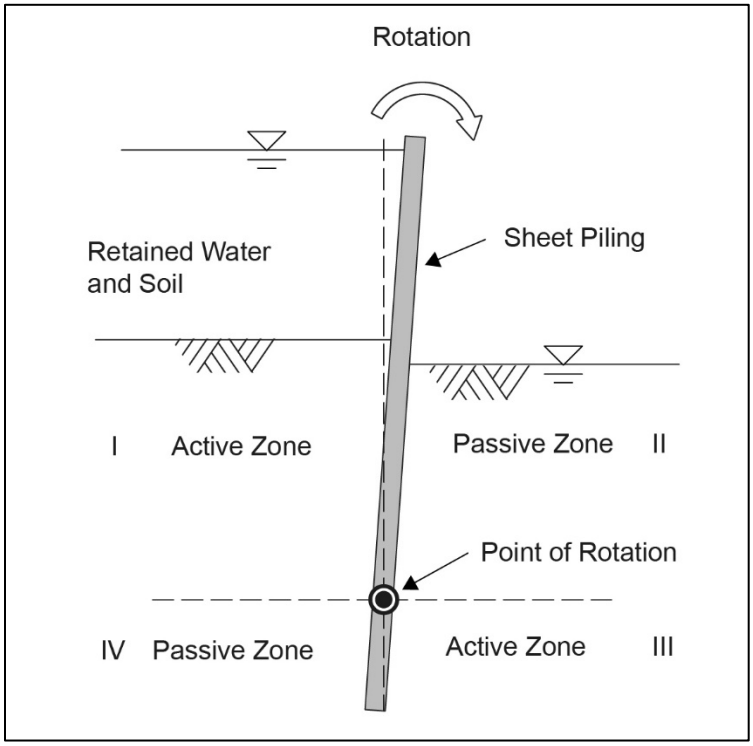

Figure 9.3. Wall Zones

9.3.3. Factor of Safety for Rotational Stability. For analysis and design, the factor of safety is applied to the soil shear strength parameters φ', c' and s_u, to compute a developed shear strength for computation of passive pressures. The developed soil strength parameters are used to solve for equilibrium of the system. The equations for the modified S-case strengths (φ'_d, c'_d) and Q-case strengths (s_{ud}) to be used in the analysis are:

$$\tan \phi'_d = \frac{\tan \varphi'}{FSP} \quad \text{(Equation 9.1)}$$

$$c'_d = \frac{c'}{FSP} \quad \text{(Equation 9.2)}$$

$$s_{ud} = \frac{s_u}{FSP} \quad \text{(Equation 9.3)}$$

Where:

φ'_d and c'_d = developed, S-Case, effective strengths

φ' and c' = S-Case, effective soil shear strengths

s_{ud} = the developed Q-Case strength

s_u = the Q-Case soil shear strength

FSP = factor of safety for passive pressures from paragraph 9.3.5.

9.3.4. Net Pressure Distributions. Computation of the pressures by the processes described in Chapter 6 result in several pressure distributions. The pressures are (Figure 9.3):

9.3.4.1. Active soil pressures due to retained side soil (Zone I).

9.3.4.2. Passive soil pressures due to retained side soil (Zone II).

9.3.4.3. Pressures due to surcharge loads on retained side surface. (Effects of surcharge loads are included in the soil pressures when a wedge method is used.)

9.3.4.4. Active soil pressures due to resisting side soil (Zone III).

9.3.4.5. Passive soil pressures due to resisting side soil (Zone IV).

9.3.4.6. Pressures due to surcharge loads on resisting side surface.

9.3.4.7. Net water pressures due to differential head.

9.3.5. Minimum Factors of Safety. The minimum factors of safety to be applied to passive pressures for analysis and design of the rotational failure mode are shown in Table 9.1.

Table 9.1
Minimum Passive Pressure Factors of Safety for Rotational Stability

	Site Classification		
Load Category	Well Defined	Ordinary	Limited
Usual	1.5	1.7	4
Unusual	1.3	1.5	3
Extreme	1.1	1.3	2.6

9.3.6. Resisting Side Soil Elevation.

9.3.6.1. As described in the previous paragraphs, the resisting side soil provides stability to the system. As the wall rotates the soil at the ground surface on the resisting side is the most heavily loaded. Therefore, the stability and the deflection of the wall under loading is very sensitive to the elevation of the resisting side soil. For this reason, the design elevation must be selected to accommodate expected degradation from scour and erosion or from site alterations.

9.3.6.2. Cantilever pile floodwalls that may be overtopped by still water or waves and eroded on the resisting side should be armored according to Chapter 12. Earth retaining walls subject to current or wave at the base of the wall may require armoring as well.

9.3.7. Rotational Stability Calculations.

9.3.7.1. Analysis. Because of the complexity of behavior of the wall/soil system, several simplifying assumptions are employed in the classical analysis techniques. Foremost of these assumptions is that the deformations of the system are sufficient to produce limiting active and developed passive earth pressures at any point on the wall/soil interface. Additionally, seepage and strength conditions will vary depending upon the rate of flood loading and duration that water is supported by a floodwall. It is typically appropriate to perform multiple stability analyses for each load case, using the bracketed approach for strength (Q, R, or S-cases) and seepage (no seepage, or full steady-state seepage).

9.3.7.2. Earth Retaining Walls.

9.3.7.2.1. Classical earth pressure theories are typically used to estimate lateral earth loads and required piling penetration for cantilever floodwalls. It is assumed that a cantilever wall rotates as a rigid body about some point in its embedded length, as illustrated in Figure 9.2. This assumption implies that the wall is subjected to the net active pressure distribution from the top of the wall down to a point (subsequently called the “transition point”) near the point of zero displacement. The design pressure distribution is then assumed to vary linearly from the net active pressure at the transition point to the full net passive pressure at the bottom of the wall.

9.3.7.2.2. The design pressure distribution is illustrated in Figure 9.4 and assumes a drained condition exists with no water present. Equilibrium of the wall requires that the sum of horizontal forces and the sum of moments about any point both be equal to zero. The two equilibrium equations can be solved for the location of the transition point (the distance z in Figure 9.4) and the required depth of penetration (distance d in Figure 9.4). Because the simultaneous equations are nonlinear in z and d, a trial-and-error solution is required.

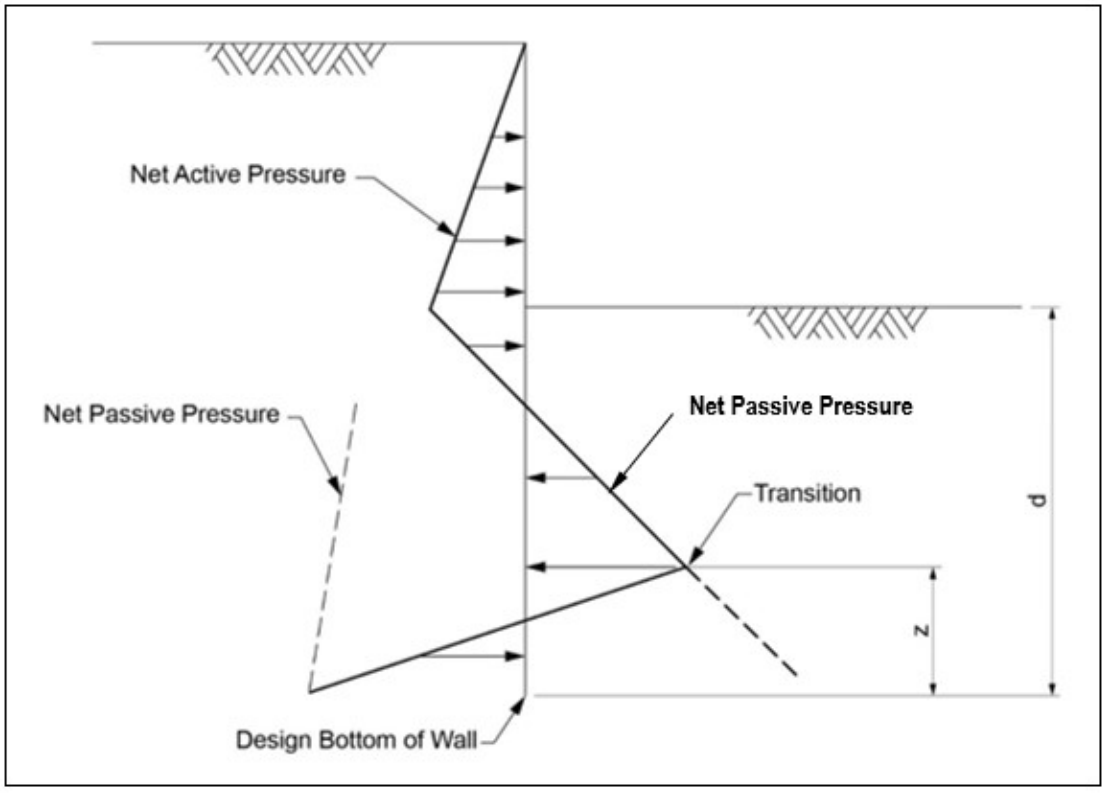

Figure 9.4. Design Pressure Distribution for Cantilever Earth Retaining Wall Without Water in Coarse-Grained Soil

9.3.7.3. Floodwalls. Lateral soil and/or water pressures exerted on the wall tend to cause rigid body rotation of a cantilever wall as illustrated in Figure 9.2. This type of failure is prevented by adequate penetration of the piling for the cantilever wall. A gap will form between the wall and fine-grained soils without drainage wherever hydrostatic pressure is greater than the active pressure. In most I-walls this will occur to the point of rotation. A hydraulic fracturing criterion to determine the depth of gapping in a cohesive soil is outlined in Appendix B of Ebeling, et al. (2018).

9.3.7.4. Cantilever Floodwalls with Drained Condition.

9.3.7.4.1. Normally, cantilever floodwalls are analyzed for both drained and undrained conditions, as required in section 5.9.3. For the floodwall analyzed with a drained condition, the soil strength is characterized by the drained shear strength, φ and effective stress analysis. Steady-state seepage is assumed to occur that can be computed using line-of-creep methods. Appendix C in Ebeling, et al. (2018) outlines the computations for an I-wall embedded in layered soil strata with different vertical hydraulic conductivities.

9.3.7.4.2. The net water pressure at the tip of the pile is zero. Figure 9.5 shows the pressure diagram of assumed forces on the wall (not including wave or impact loads that may also be included). Horizontal forces and moments are summed about the pile tip. The shear strength parameters for developed passive pressure in the analysis use developed soil strength parameters (ϕ'_d and c'_d). The factor of safety and the dimension Z are altered until a solution is reached, at which the sum of both horizontal forces and moments are equal to zero. The effective unit weight of the soil on both sides of the wall is calculated with seepage accounted for, as described in Chapter 6.

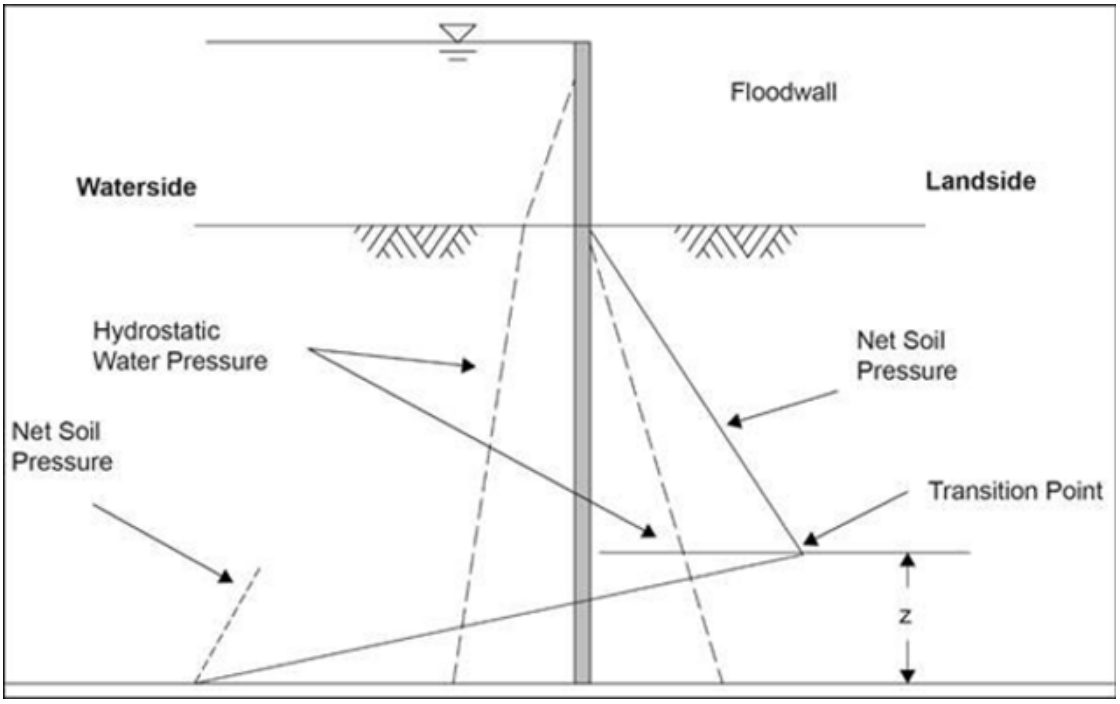

Figure 9.5. Assumed Pressure Distribution for a Cantilever Floodwall in Free Draining Material

9.3.7.5. Cantilever Floodwalls with Undrained Condition.

9.3.7.5.1. For floodwalls analyzed for undrained conditions with strength characterized by undrained strength (cohesion), the landside soil pressure above the rotation point is assumed to be equal to the total stress developed passive pressure, as shown in Figure 9.6. Below the transition point, the passive pressure on the landside is assumed to transition linearly to the total stress active pressure at the tip of the pile. On the waterside, the driving forces are hydrostatic water pressure on the wall and in the gap formed behind the sheet pile.

9.3.7.5.2. If the gap can form at or below the transition point, the pressure at the transition point on the waterside is equal to the hydrostatic pressure, as shown in Figure 9.6. If the gap stops before the transition point (hydrostatic pressure is less than the waterside active lateral soil pressure), the pressure at the transition point is equal to the active soil pressure at that elevation, as shown in Figure 9.7. Below the transition point, the soil pressure can be assumed to transition linearly to full mobilized passive pressure on the waterside at the pile tip.

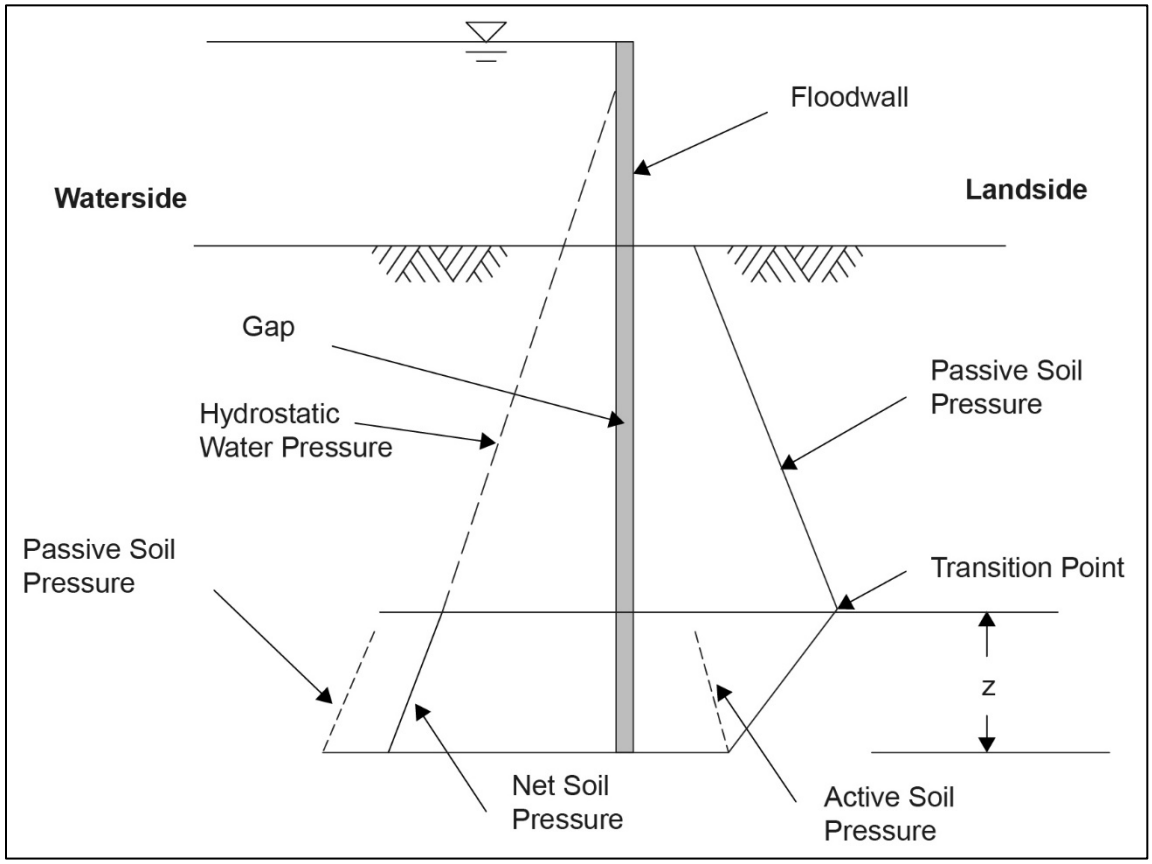

Figure 9.6. Assumed Pressure Distribution for Clay Founded Floodwall with Theoretical Gap Depth Below Transition Point

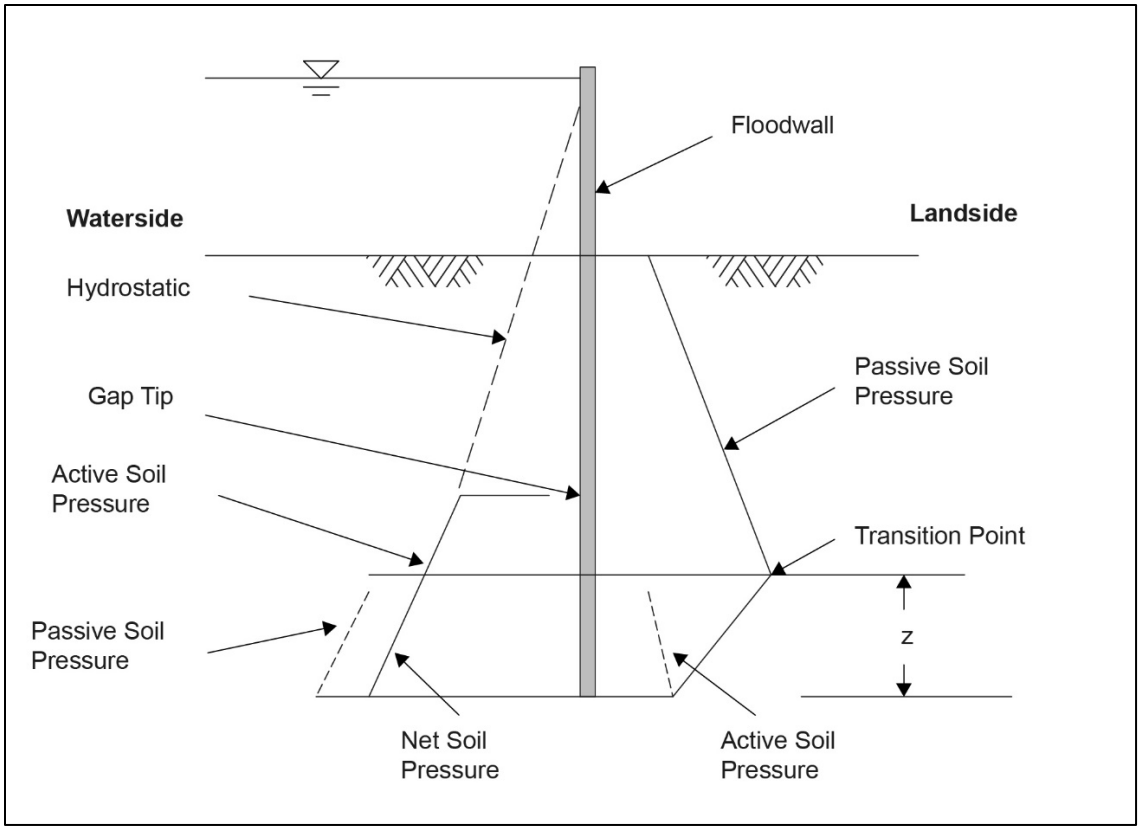

Figure 9.7. Assumed Pressure Distribution for Clay Founded Floodwall with Theoretical Gap Depth Above the Transition Point

9.3.7.6. Cantilever Floodwalls on Earthen Levee Embankments.

9.3.7.6.1. Conventional earth pressure computations may not correctly compute resisting pressures for cases with varying ground surface, such as with floodwalls constructed on levees. Besides the geometrical considerations, levees are sometimes founded on soft clays or may see high uplift pressures on the landside of the embankment. As a result, critical soil resistance wedges may be more similar to slope stability failure surfaces than typical passive soil wedges.

9.3.7.6.2. Careful consideration needs to be made in these circumstances to ensure that correct resisting pressures are computed. Slope stability tools can be used to compute resisting pressures to be used in the rotational stability analysis, but successfully converging on limit equilibrium with this method has been inconsistent. Full numeric analysis is the best method for analyzing I-walls on levees.

9.3.8. Computer Programs.

9.3.8.1. The analysis of rotational stability can be performed using CASE PC software CWALSHT or CI-WALL. However, the caveats for floodwalls on levees discussed in the previous paragraph apply to these programs. Full numeric analysis is required for situations of complex geometry and stratigraphy. CI-WALL was developed to perform total stress analysis of cantilever pile walls that includes the gap. CWALSHT performs analyses of floodwalls correctly for drained soil conditions. However, it is not capable of performing a true total stress analysis needed for a precise assessment of the undrained soil condition for floodwalls.

9.3.8.2. CWALSHT can be used to analyze floodwalls on flat ground in undrained soils. Total stress (undrained) strength parameters are input along with correct water elevations. The result is an approximate solution for a fully saturated, undrained condition that accounts for the gap. This is based on the following assumption: That the sum of the water pressure and effective soil pressures that are computed by CWALSHT (regardless of the strength parameters that are used) are approximately equivalent to the lateral earth pressures computed with a total stress analysis. This is true where the active pressure coefficient K_a and the passive pressure coefficient K_p are equal to 1.0.

9.3.9. Factors in Rotational Stability Performance.

9.3.9.1. Numerous full numerical analyses were performed to understand performance of I-walls after poor performance of some walls in New Orleans, Louisiana during Hurricane Katrina. Figure 9.8 plots factor of safety verses deflection at the ground surface using results from these studies and results from one field load test, E-99, performed along the Atchafalaya River in Louisiana in 1985 (Jackson, 1988). Unless otherwise noted, factor of safety was changed by changing the water height on the wall. In a few cases, the factor of safety was changed by changing the soil strength or pile tip depth with a constant water height.

9.3.9.2. Regardless of the soil type or method of changing the factor of safety, the trend is the same with deflection exponentially increasing as the factor of safety approaches 1.0.

9.3.9.3. The ratio of the water height on a floodwall to embedment depth of the sheet pile (embedment ratio) is frequently used as a guide for ensuring good performance of walls that retain water. The studies plotted in Figure 9.8 are shown again in Figure 9.9 as a function of the embedment ratio rather than factor of safety. These results show that embedment depth provides a very coarse indication of performance. An embedment ratio acceptable for one soil condition may not be acceptable for others.

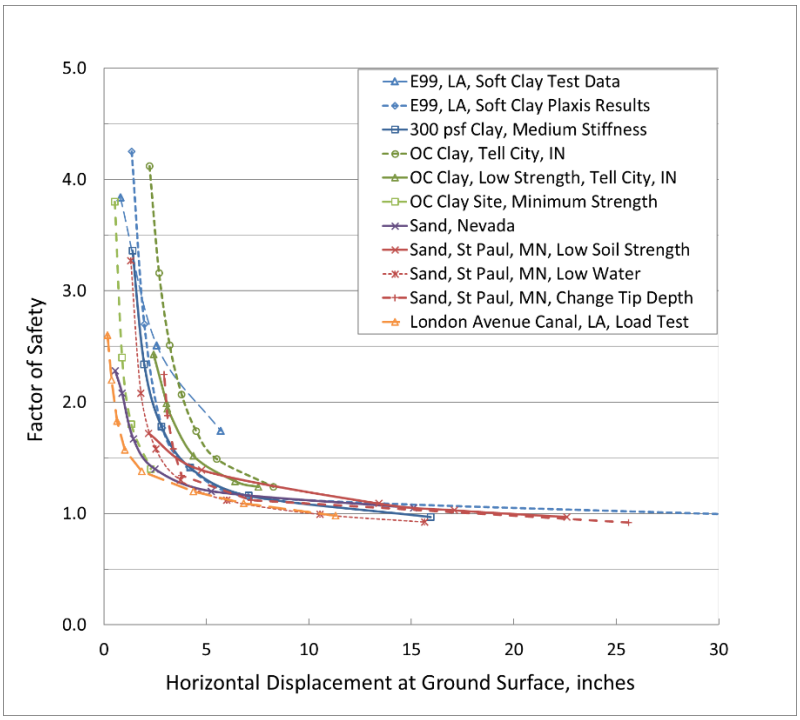

Figure 9.8. Relationship Between Rotational Factors of Safety and Net Deflection (USACE)
(See Appendix A for Metric Conversions)

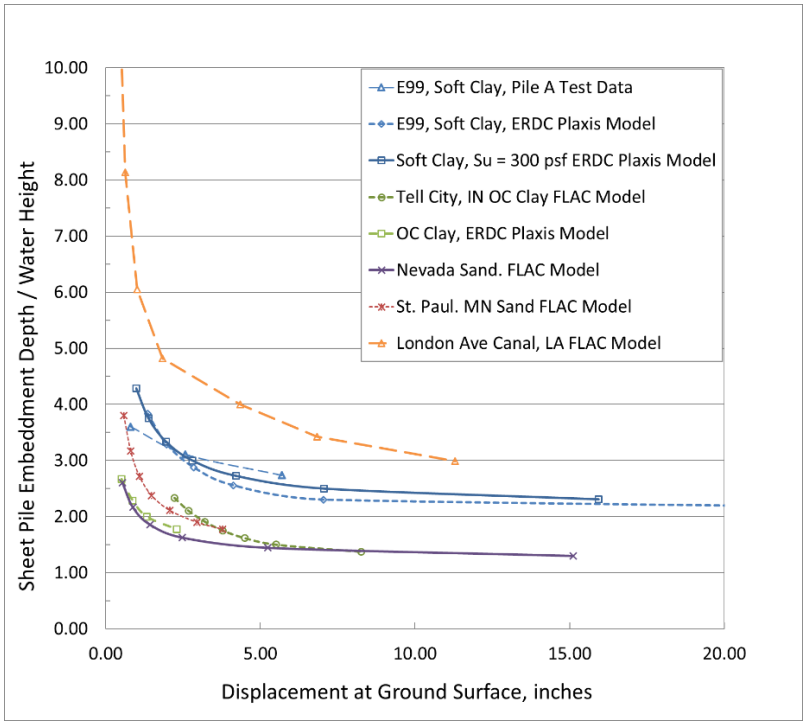

Figure 9.9. Relationship Between Embedment Ratio and Deflection (USACE)
(See Appendix A for Metric Conversions)

9.4. Global Stability.

9.4.1. The global stability performance mode is used to assess whether the soil mass around the wall will translate or rotate in the absence of structural support. Two potential rotational failures of the entire soil mass containing a cantilever wall are illustrated in Figure 9.10: (a) a failure where a gap does not form between the soil and the sheet pile wall and (b) a case with a water-filled gap. This potential failure is independent of the structural characteristics of the wall. The main recourse when this type of failure is anticipated is to change the geometry of resisting side material or improve the soil strengths.

9.4.2. Global stability analysis needs to be assessed for all relevant loading cases (see Chapter 6) using appropriate combinations of strength (Q, R, or S in Chapter 5) and seepage conditions (Chapter 6). It is typically appropriate to perform multiple global stability analyses for each load case, using the bracketed approach for strength and seepage.

9.4.3. Potential failure along circular, non-circular block, or general non-circular potential slip surfaces should be considered in the analysis. See section 7.6, EM 1110-2-1902, and EM 1110-2-1913 for further guidance on analysis methods and selection of soil strength and seepage conditions for various loading cases. Factors of safety on critical slip surfaces must exceed minimums in Table 9.2. Details regarding analysis of cantilever walls are provided in the paragraphs below.

Table 9.2
Minimum Factors of Safety for Global Stability

	Site Classification		
Load Category	Well Defined	Ordinary	Limited
Usual	1.4	1.6	3.3
Unusual	1.3	1.5	3
Extreme	1.1*	1.4*	2.3
*For MDE (and MCE) earthquake, seismic global stability and post-seismic performance are evaluated according to Chapter 17.			

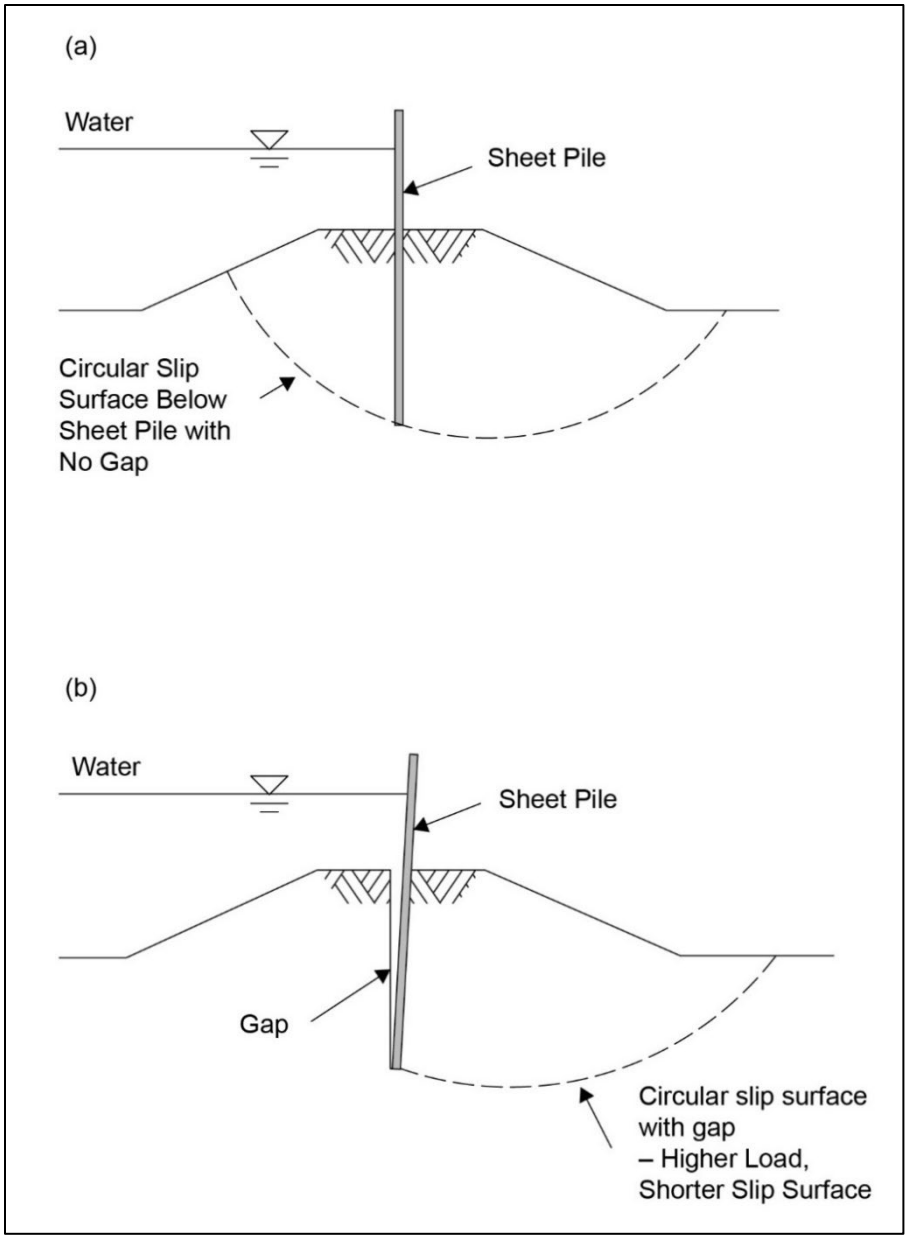

Figure 9.10. Global Stability Failures for Cantilever Wall
(a) Without Gap; (b) With Water-Filled Gap (After Duncan et al., 2008)

9.4.4. Cantilever pile walls can serve as either an earth retaining wall or a water barrier (and sometimes as both). They may be on flat ground or as a wall/levee composite. Depending on the application, walls are subject to different global stability failure mechanisms. Specific considerations when performing global stability analyses of cantilever pile walls are as follows:

9.4.4.1. For analysis of the undrained condition, formation of a gap between the sheet pile and active side soil for floodwalls (I-walls) may lower global stability safety factors. However, some ground geometry and soil properties yield lower safety factors when a no gap condition is analyzed. Global stability needs to be checked for the gap and no gap conditions.

9.4.4.2. Failure of a wall and embankment slope toward a river or canal may be a concern during low water levels. However, failure toward the landside must be considered during high-water levels.

9.4.4.3. When the pile is driven to lengths deeper than needed for rotational stability, the pile may begin to act as a long pile rather than a short pile. In that case, global stability analysis surfaces should run through the pile with the strength of the pile neglected. The failure surfaces should be at depths no higher than the depth of pile needed to satisfy rotational stability requirements. However, the reinforcing effect of the pile can greatly affect stability analyses in soft soils. In addition, pile strength can be considered in the global stability analysis when full numeric analysis procedures are used. See Chapter 16 for a discussion of full numeric analysis procedures.

9.4.4.4. When I-wall/levee composite systems are proposed, global stability of the levee and riverbank is addressed. Design of the embankment portions of I-wall/levee composite systems is performed according to EM 1110-2-1913, excluding reinforcing effect of the piling. These analyses will be done in addition to other required global stability analyses presented herein.

9.4.4.5. Walls on flat ground (without embankments) can result in very high safety factors for deep-seated failure surfaces within limit equilibrium software packages. Most computer programs will not calculate such high safety factors. Therefore, search routines for these conditions usually fail to generate complete results. Engineers may need to perform several searches with varying search parameters to determine the minimum safety factor confidently for deep-seated sliding.

9.4.5. As discussed in previous sections of this chapter, addressing the impacts of the potential presence of a water-filled gap is critical to I-wall design for the undrained condition, including aspects of global stability. Additional details on modeling the water-filled gap follow.

9.4.5.1. The influence of the waterside gap may be incorporated in two ways in the slope stability computational models: use of a tension crack model or use of a model that includes the removal of the waterside soil to the bottom of the gap. Of these, removing the waterside soil to the bottom of the gap is probably easiest with the least likelihood of error (see Duncan et al., 2008).

9.4.5.2. Many limit equilibrium software packages allow the inclusion of a tension crack that may or may not be filled with water. These software programs may not accurately include the effect of ponding water. Designers should verify that the version of software they are using is accurate before using the tension crack option to represent the waterside gap. The initial assumption should be that the water-filled tension crack option for walls is not accurate.

9.4.5.3. Unlike rotational stability where a gap depth is estimated, global stability analyses are performed assuming that no waterside gap develops or using the deeper of the following two assumptions related to gap depth:

9.4.5.3.1. A gap will extend to the bottom of the sheet piling.

9.4.5.3.2. A gap will extend to the bottom of the fine-grained material, up to 5 ft. (1.5 m) below the sheet pile tip (Figure 9.11).

9.4.5.4. Because saturated granular soils will not sustain a gap, a gap is not presumed to develop in these materials. Therefore, when cohesive soils overlie granular soils, the gap depth may propagate to the top of the granular layer but no deeper. The condition where cohesive soils underlie granular soils has not been investigated. However, the previous assumption that the gap will extend to the bottom of the sheet pile or to the bottom of the fine-grained material should be followed.

9.4.5.5. It is possible that an I-wall subjected to sustained loading may have a gap that forms on the waterside, yet clay and silts in front of the wall have reached a steady-state seepage condition with strengths controlled by drained parameters. When using the bracketed approach for strength and seepage for global stability calculations, the gap should also be evaluated for the S-case.

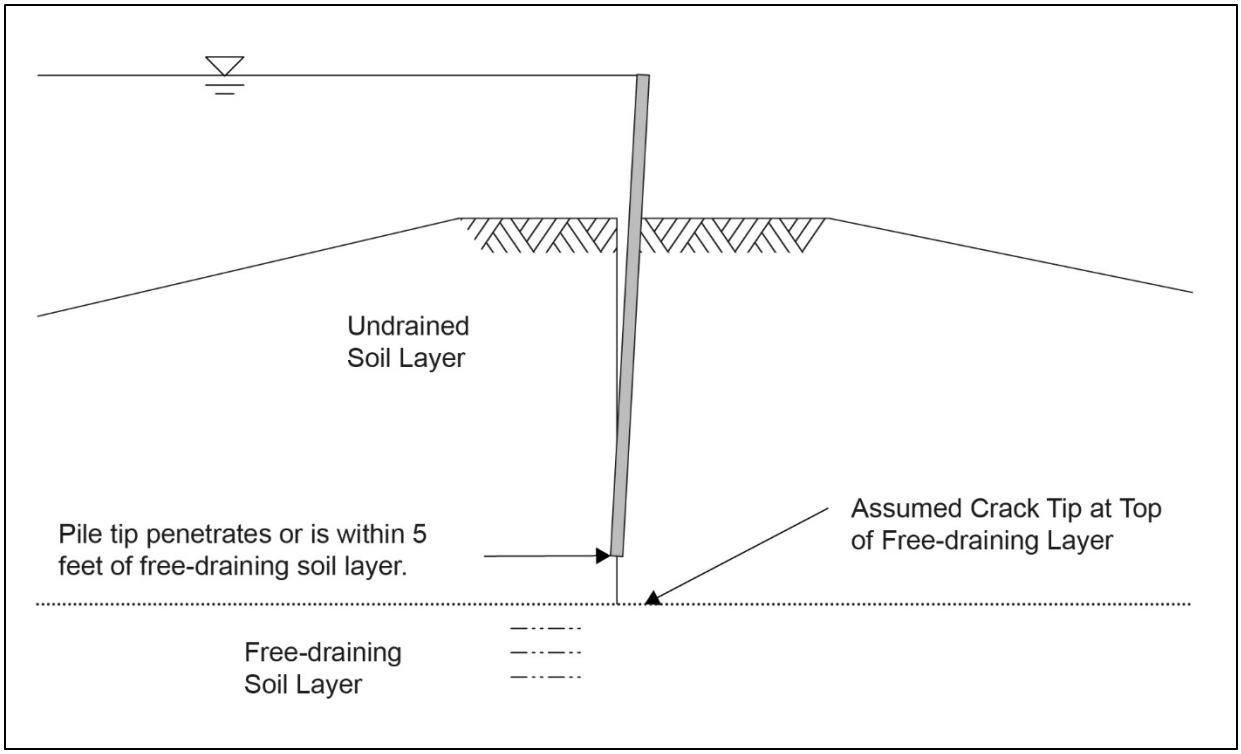

Figure 9.11. Potential Crack Propagation Below Waterside Gap Assumed for Global Stability and Seepage Analyses

9.5. Internal Erosion.

9.5.1. The internal erosion performance mode for cantilever pile walls is similar to shallow-founded walls. The formation of a waterside gap, evaluation methods, and seepage control measures are as described in section 7.7. Factors of safety for internal erosion are provided in section 7.7, Table 7.3. Due to the flexible nature of cantilever pile walls, the gap described in section 7.7 between soil and wall is more likely to form during high-water events than other wall types.

9.5.2. Two factors related to seepage have been attributed to the several floodwall failures that occurred in New Orleans during hurricane Katrina. One is the high pore pressures that act on the structure and the short seepage path described in stability related sections of this chapter. The other is high pore pressures in foundation sands landside of the wall due to gap formation. Backward Eroding Piping (BEP) would be more likely where the gap results in a hydraulic connection between the ground surface and a sand layer at the tip of the piling with a potential for piping. To meet minimum requirements for internal erosion, in certain cases the sheet piling for a cantilever pile wall may need to be driven deeper than required by the stability performance modes.

9.6. Settlement and Deflection.

9.6.1. General. Settlement (movement from soil compression) and deflection (lateral movement and rotation under loading) are serviceability limit states. They very rarely are associated with wall failure but can affect use and operability. However, because cantilever pile walls rely on passive pressure on the resisting side of the wall for stability, deflection is an important factor in its performance.

9.6.2. Settlement.

9.6.2.1. Settlement analysis is performed as outlined in section 7.8 to determine the magnitude of total and differential settlements, and tolerable limits for the wall system. In general, steel sheet pile walls can tolerate more settlements without noticeable damages when compared to rigid concrete retaining walls. For this reason, sheet piling is often used as the transition between floodwalls and levees, as described in section 12.2.

9.6.2.2. Increasing the rigidity of the wall system by the addition of a concrete cap will make the wall system less tolerant to settlements. Decreasing joint spacing and using joints and waterstops that can tolerate the expected differential movement can help mitigate this. Since the top of wall cannot easily be modified, the designer should consider the confidence level of the settlement prediction. The walls should be overbuilt sufficiently to prevent settlement of the top of the wall below design grade. If possible, concrete capping should be delayed until a major portion of the settlement has occurred.

9.6.2.3. Settlement of soil layers below the ground surface and above the pile tip will have a downdrag effect that could result in settlement of the pile. This can be evaluated using methods like those discussed in section 8.6.3.

9.6.3. Deflection.

9.6.3.1. Control of deflection is required to assure performance of a cantilever pile wall. However, some deflection is needed to develop the passive resisting soil pressures that provide stability to cantilever pile walls. Therefore, more movement is expected of this wall type than the other types covered in this manual. This wall type must be used in situations where greater deflection is acceptable.

9.6.3.2. Stability factors of safety are relied on to control deflections of walls with shallow foundations and deep foundations (for piles in bearing). For cantilever pile walls, Figure 9.8 shows that some walls with equally high factors of safety may have much more deflection than others do. There can be combinations of soil type and ground surface configuration where walls with high factors of safety for rotational stability may have deflections that exceed serviceability requirements or result in permanent wall displacement after loading. For this reason, factors of safety from a limit equilibrium analysis for rotational stability cannot be relied on alone to provide adequate wall movement performance.

9.6.3.3. Performance requirements are provided in Chapter 4 to evaluate deformation performance. The magnitude of deformation needs to be managed for serviceability of the completed structure and to prevent damage to waterstops. Deflections limits are determined by the requirements of the project. Temporary earth retaining walls may have satisfactory performance with large amounts of deflection. Permanent walls should be designed to have little deformation for usual cases and controlled of deflection for unusual and extreme cases.

9.6.3.4. Critical deflections are defined by sufficient plastic deformation of the resisting side soils to result in permanent wall deformation. In addition, the effect of deflection at the top of the wall on waterstops and adjacent structures should be assessed by the engineer.

9.6.3.5. The maximum computed deflections at the ground line of floodwalls, dam walls, and dam crest walls, should not exceed the values in Table 9.3. Note that these are net deflections as described in Chapter 16. These deflections limits are intended to apply to freestanding walls. Walls that tie into more rigid structures may require less design deflection.

Table 9.3
Maximum Deflections at Ground Surface for Rotation of Floodwalls, Dam Walls, and Dam Crest Walls

Loading Category	Maximum Deflection
Usual	0.5 in. (1.3 cm)
Unusual	1.5 in. (3.8 cm)
Extreme	3.0 in. (7.6 cm)

9.6.3.6. Computation of Deflections. Limit equilibrium and partial numeric analysis, as defined in Chapter 16, are not capable of accurately computing deflections of cantilever pile walls. Only calibrated full numeric analysis is capable of doing so. Full numeric analysis procedures are described in Chapter 16. Personnel performing these analyses must be experienced with the computer program, the soil constitutive model used by the program, modeling of soil-structural interaction problems with proper interface elements, and techniques needed to include the gap on the waterside of the wall.

9.6.3.7. Sensitivity analyses should be performed to determine the effects of all parameters on the results. The model should be validated against known stress states, and if possible, calibrated against known data. Deflections should be plotted for each foot of water level against the wall. Inclusion of the concrete cap has been shown to improve stability in these analyses for I-walls in granular soils analyzed using drained soil properties, but settlement of soil under the cap should be considered in the analysis.

9.6.3.8. When full numeric analysis methods are not used for calculation of deflections, the wall height for floodwalls, dam walls, and dam crest walls, must be no greater than the values shown in Table 9.4. Figure 9.12 provides a definition of water height for the table.

Table 9.4
Maximum Wall Heights for Deformation Control of Cantilever Pile Walls Used for Floodwalls, Dam Walls, and Dam Crest Walls

	Foundation Type			
	Sand	Soft Clay	Stiff Clay	
Load Category	$\phi' \geq 32.5$, $D_r \geq 0.50$	$s_u \leq 300$ psf	$s_u \geq 1{,}500$ psf	Wall on Earthen Levee Embankment
Usual	7 ft. (2.1 m)	5 ft. (1.5 m)	8 ft. (2.4 m)	4 ft. (1.2 m)
Unusual	9 ft. (2.7 m)	7 ft. (2.1 m)	12 ft. (3.7 m)	4 ft. (1.2 m)
Extreme	11 ft. (3.4 m)	8 ft. (2.4 m)	15 ft. (4.6 m)	4 ft. (1.2 m)

Notes:

(a) D_r = relative density

(b) The heights in the table are the distance from the elevation of the top of wall to the ground surface on the landside of the wall, as shown in Figure 9.12.

(c) Linear interpolation is permitted for clay strengths between those shown, but extrapolation is not permitted.

(d) Limited data has been developed for deformation of walls on levees. Walls on levees with heights greater than 4 ft. (1.2 m) as shown in Figure 9.12 require analysis by full numeric analysis methods.

(e) For layered soils, the engineer will base the maximum height on the predominant soil type resulting in the lowest water height for deformation control. The soil type used is determined by the soil on the landside of the wall extending from the ground surface to the elevation of maximum net passive pressure from the CWALSHT or CI-WALL analysis. Questionable sections will require analysis by full numeric analysis methods.

(f) Walls founded in soils with properties outside the range of soils in the table must be analyzed with full numeric analysis methods.

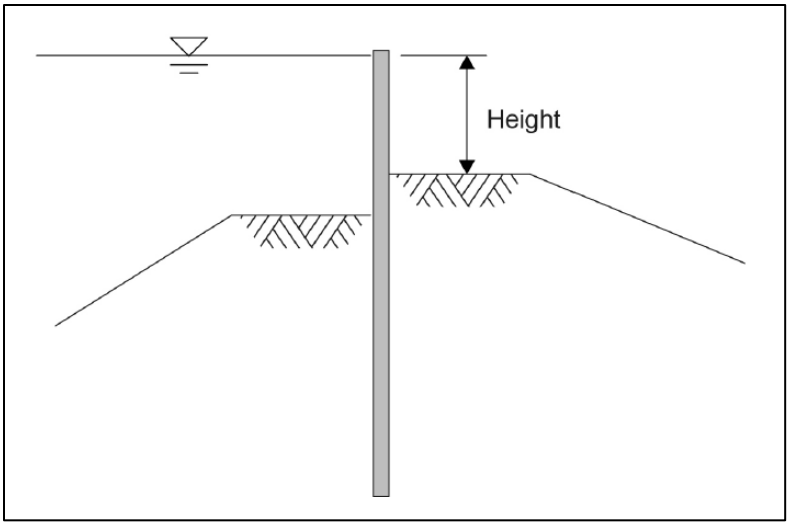

Figure 9.12. Definition of Wall Height for Table 9.4

9.7. Strength of Structural Elements.

9.7.1. Forces for Design.

9.7.1.1. The analysis of the rotational failure mode described in section 9.3 provides values of the force effects of maximum bending moment (M_{max}) and maximum shear (V_{max}) to be resisted by the piling. Design penetration of the piling is determined using a factor of safety for stability applied to soil strengths. To avoid compounding factors of safety, for the design and analysis of the piling strength, force effects are computed using undeveloped earth pressures (factor of safety of 1 for both active and passive pressures).

9.7.1.2. With the method of analysis used in this manual, the load effects from water, soil, or other loading cannot be separated. Therefore, design is performed using LRFD methods with a single load factor applied to resultant force effects.

9.7.2. Required Pile Cross Section. The wall section must provide the required minimum sectional properties over the service life of the wall, after allowance for possible loss of material due to corrosion, abrasion, or other detrimental effects. See section 12.6 for more information on corrosion protection.

9.7.3. Combined Sheet Pile Walls. Combined sheet pile walls are formed by joining sheet pile sections with regularly spaced structural piles (king piles) comprised of H-piles, pipe piles, or wide flange steel beams. The combined sheet pile and king pile system is normally accounted for in analyses of strength and stiffness. Other analyses are the same as those performed for a continuous wall.

9.7.4. Sheet Piling.

9.7.4.1. Steel. Steel piling or structural steel components that are part of walls must be designed according to ANSI/AISC 360-16. Because the cantilever pile wall analysis method in this manual is not fully compatible with multiple load factors, a single load factor is used with the AISC LRFD method. The load factors are intended to provide designs similar to previous guidance while using up-to-date member capacity. The load factors are intended to account for the typical environment of hydraulic structures, but do not account for section loss from corrosion. The minimum load factors by load case are shown in Table 9.5.

Table 9.5
Minimum Load Factors for Design of Steel Piling

Load Category	Load Factor
Usual	1.8
Unusual	1.4
Extreme	
Principal Load Condition 1 from section 6.3.5 and Earthquake	1.2
Principal Load Conditions 2 and 3 from section 6.3.5	1.3
Site-Specific Earthquake	1.0

9.7.4.2. Aluminum. Aluminum components of cantilever pile walls must be designed using the Aluminum Design Manual LRFD equations with single load factors as described in the previous paragraph.

9.7.4.3. Prestressed Concrete. Prestressed concrete is designed to satisfy both strength and serviceability requirements. Strength design must follow the basic criteria set forth in ACI 318, with minimum load factors provided in EM 1110-2-2104 applied as described in paragraph 9.7.5. Control of cracking in prestressed piles is achieved by limiting the concrete compressive and tensile stresses, under service load conditions, to the minimum values shown in Table 9.6.

Table 9.6
Minimum Stresses for Precast Concrete Piling

Stress Type	Stress
Uniform Axial Tension	0
Bending (Extreme Fibers):	
Compression, Usual Loads	$0.40\,f'_c$
Compression, Unusual Loads	$0.50\,f'_c$
Compression, Extreme Loads	$0.60\,f'_c$
Tension, Usual	0
Tension, Unusual or Extreme Loads	ACI 318
f'_c = compressive strength of concrete	

9.7.4.4. Polyvinyl Chloride (PVC). For design of walls with PVC sheet pile, see Appendix B.

9.7.4.5. Shear Area. The referenced design standards are oriented toward rectangular or flanged I-shaped beams. The shear area per foot of wall for Z-shaped sections may be taken as:

$$A_v = \frac{t_w\, h}{w} \qquad \text{(Equation 9.4)}$$

Where:

A_v = shear area = A_w

t_w = thickness of the web portion of the Z-shaped pile, inches

h = height of the Z-shaped pile, inches

w = width of the section, feet

9.7.5. Cast-in-Place Reinforced Concrete. Reinforced concrete is designed according to EM 1110-2-2104. Because the analysis method for cantilever pile walls is not compatible with multiple load factors, a single load factor is applied to each load combination. The single load factor to be applied to a load combination is the load factor that would be applied to the principal load in the combination. Load factors are provided in EM 1110-2-2104.

9.8. I-Wall Sheet Pile to Concrete Connection.

9.8.1. General. A special case of the structural strength performance mode is the case where a steel sheet pile floodwall is extended above grade using a concrete cap, as shown in Figure 2.8. To transfer the loads from concrete to sheet pile through the connection, the sheet piling is embedded some length into the concrete cap. The sheet pile embedment length into the concrete and reinforcement detailing is included in the design.

9.8.2. Structural Behavior.

9.8.2.1. General. With the sheet pile embedded in the concrete, two concrete legs are formed below the top of sheet pile on each side of it, as shown in Figure 9.13. These legs are referred to as the driving side leg (side at which load is applied) and the resisting side leg (opposite side). These two legs straddle the sheet pile and are subjected to a moment and shear gradient along the length of the connection.

9.8.2.2. Finite Element Analysis. Finite element analysis was performed to understand and verify the behavior of this connection. This chapter contains a brief summary of the findings of that analysis. The analysis results were used to develop the design requirements for the connection.

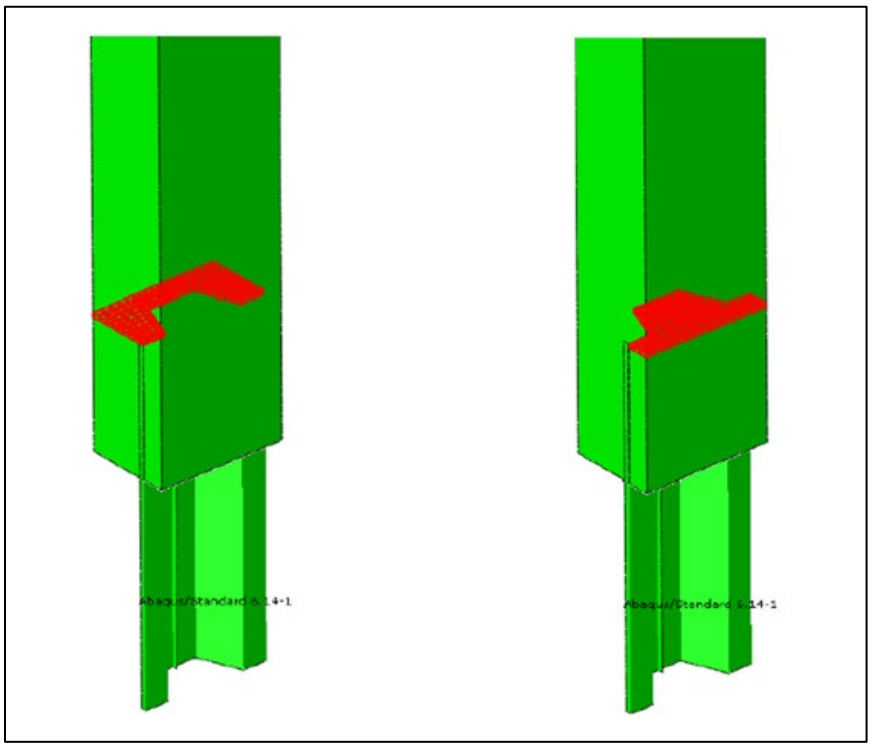

Figure 9.13. Resisting and Driving Side Legs

9.8.2.3. Bond. For a new wall, bond is initially developed between the concrete and steel sheet pile. Parametric finite element analysis has shown that high bond stresses (up to 400 psi (2,760 kPa)) are developed within the connection for moderate loadings. Additionally, bond strengths are highly variable and can vary from 50 to 400 psi (345 to 2,760 kPa). Environmental conditions (such as moisture, freeze/thaw, corrosion, vibration) tend to degrade bond over time. Therefore, bond between the concrete and sheet pile should be neglected in the analysis and design of I-wall connections.

9.8.2.4. Internal Beam Forces. The internal forces arise from the external loads through cantilever beam action and the prying action of the individual legs. The internal forces at the top and bottom of the connection are shown in Figure 9.14.

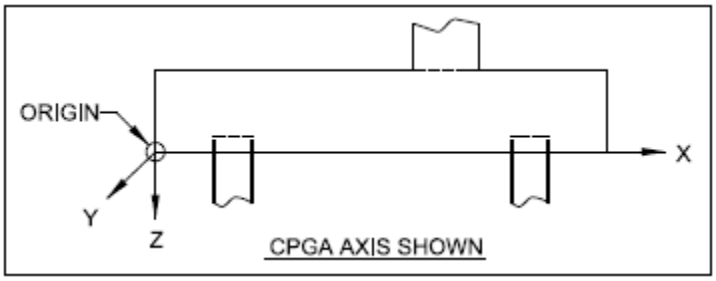

Figure 9.14. Internal Forces at the Connection

9.8.2.5. In Figure 9.14, M_a is the cantilever moment just above the top of sheet pile. M_r is the moment at the top of the resisting leg, and M_d is the moment at the top of the driving leg. For internal equilibrium, M_s is the internal moment in the sheet pile and is equal to 0 at the top of the sheet pile. V_s is the internal shear in the sheet pile and is equal to 0 at the top of the pile.

9.8.2.6. The cantilever moment, M_a and shear, V_a at the top of the connection must equal the sum of the moment and shear at the top of the corresponding concrete legs. The section equilibrium is represented in the equations below:

$$M_a = M_d + M_r \quad \text{(Equation 9.5)}$$

$$V_a = V_d + V_r \quad \text{(Equation 9.6)}$$

Where:

M_a = the moment just above the top of sheet pile

M_r = the moment at the top of the resisting leg

M_d = the moment at the top of the driving leg

V_a = the shear just above the top of sheet pile

V_r = the shear at the top of the resisting leg

V_d = the shear at the top of the driving leg

9.8.2.7. Connection Configurations. In practice, there are several connection configurations, but two general categories are unrestrained driving side leg and restrained driving side leg. The unrestrained connections have no (or insufficient) reinforcement provided to restrain the driving side leg from deflecting or prying away from the sheet pile. Restrained connections have reinforcement details that restrain the driving side leg near the bottom of the connection. Existing capped I-walls typically have provided restraint by providing tie bars, U-bars, hooks, welded studs, or reinforcement welded to the sheet pile. These conditions will be described in the following paragraphs.

9.8.3. Unrestrained Connections.

9.8.3.1. For unrestrained or untied driving side legs, the external moment at the top of the connection is resisted almost entirely by the resisting side leg. As the driving leg is unrestrained to deflect and pull away from the sheet pile, the driving side primary reinforcement is not able to be developed. The resisting side leg therefore resists nearly all of the applied bending moment. With no reinforcement provided at the tension side of the resisting leg (next to the sheet pile), it is an unreinforced section, and the moment capacity of the connection is controlled by the cracking moment of the resisting leg.

9.8.3.2. From finite element analysis, the higher tensional stresses on the unreinforced side of the resisting leg was confirmed and is shown in Figure 9.15. Plotted in Figure 9.16 are finite element analysis results that show how the driving side moment, M_d, is very small compared to M_r, the resisting side moment. Additionally, V_d, the shear in the driving side leg, is negative to counter the high bearing forces from bending and prying at the top of the sheet pile. Thus, the magnitude of V_d is higher than V_a, the applied external cantilever shear.

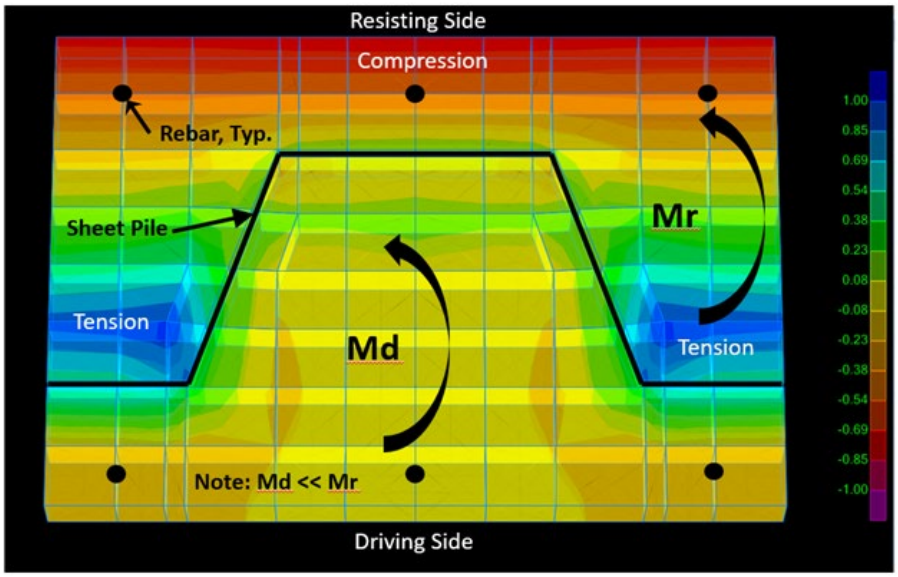

Figure 9.15. Finite Element Results, Unrestrained Connection: Section Stresses at the Top of the Sheet Pile

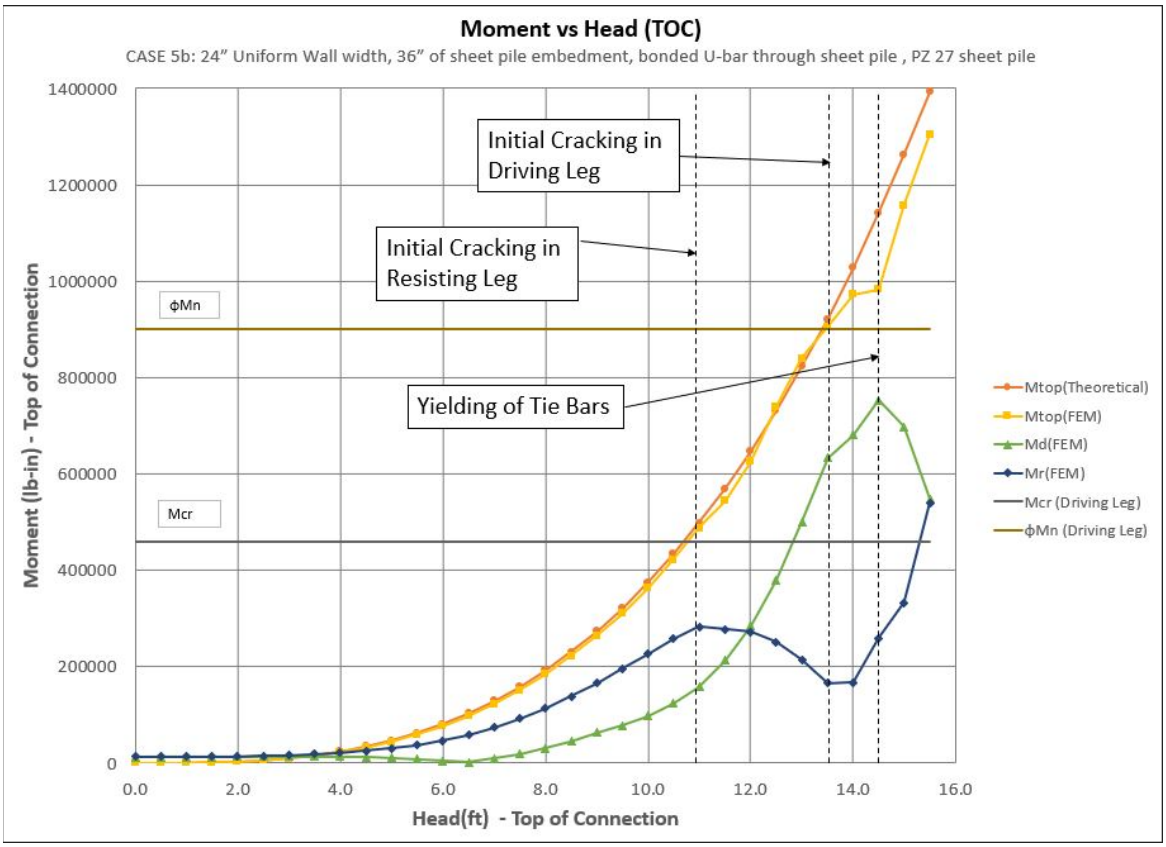

Figure 9.16. Finite Element Results, Unrestrained Connection: Moment at Top of Connection Verses Hydrostatic Head

9.8.3.3. Internal Connection Forces. The top of the driving side leg bears against the sheet pile and the bottom of the resisting side leg bears on the opposite side of the sheet pile. As shown in Figure 9.17, a couple is formed from the resultant forces on the concrete legs. Modeling indicates that the resultant load, *Fr*, can be assumed to be near the bottom of the resisting leg with y less than an inch. The y value generally does not vary with load level but increases as sheet pile embedment decreases.

9.8.3.4. The location of the resultant load, *Fd*, varies with load level. As load increases the length of the driving leg in compression decreases. Thus, the value of x varies with the load level. As the load approaches the ultimate strength the length in compression is limited and the value of x becomes constant. From modeling of 36 and 42 in. (91 and 107 cm) embedment lengths, the value of x near ultimate can be taken as 0.67 in. (17 mm). The couple formed between *Fr* and *Fd* resists the external loads. The individual forces also contribute to prying action in their respective leg.

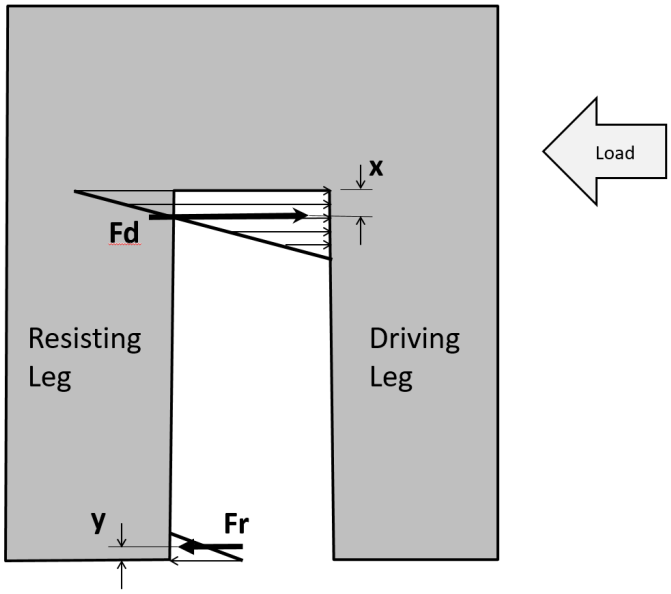

Figure 9.17. Simplified Free Body Diagram Sheet Pile Reaction Forces on Concrete at Connection

9.8.3.5. Failure Mode. The failure mode progresses as increasing hydrostatic head increases internal bending and prying forces at the top of the sheet pile. Once the cracking moment of the resisting leg is reached, a brittle cracking failure occurs and the section topples over, leading to a complete collapse of the concrete cap. Failure during the model run shown in Figure 9.16 is indicated with the line at 13 ft. (4 m) of head. The model became extremely nonlinear beyond that point, indicating that the section had failed.

9.8.4. Restrained Connections.

9.8.4.1. Connections with restraint provided near the bottom of the concrete were evaluated with finite element analysis. The configurations evaluated were with fully bonded tie bar reinforcement, as shown in Figure 9.18 and with unbonded tie bar reinforcement, as shown in Figure 9.19. The reinforcement through the sheet pile increased the strength of the connection by tying the two legs together and allowing engagement of the driving side primary reinforcement to resist bending moment.

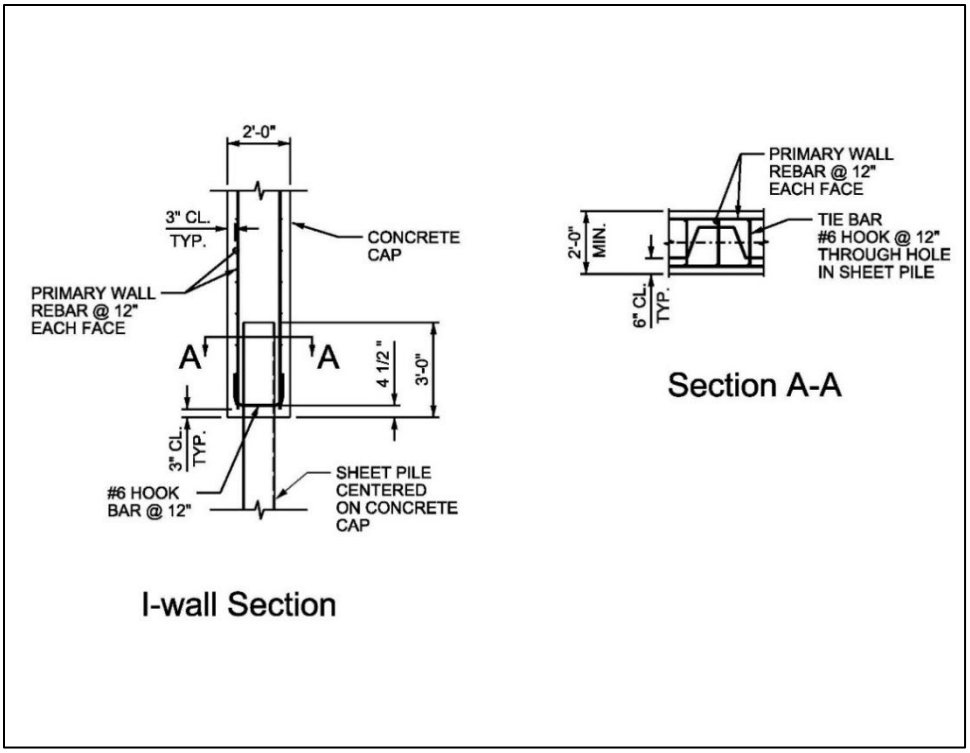

Figure 9.18. Restrained Connection with Fully Bonded Tie Bars

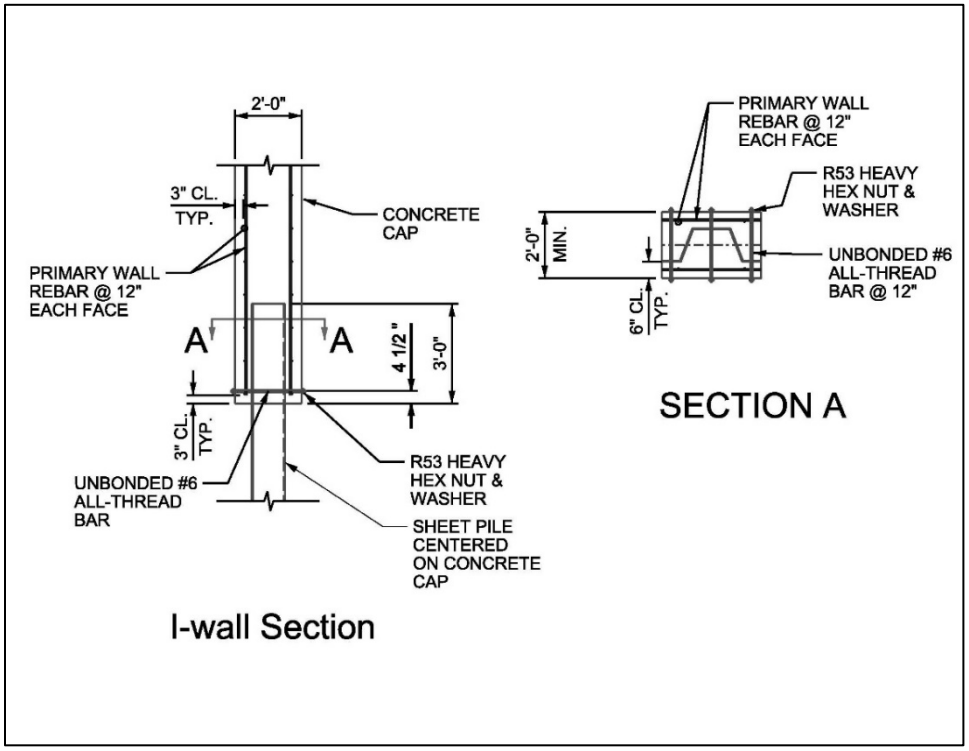

Figure 9.19. Restrained Connection with Post Installed Tie Bars in Drilled or Formed Unbonded Holes

9.8.4.2. In the finite element analyses, the bonded tie bar reinforcement exhibited yielding while the unbonded tie bars showed no yielding. This was mostly due to how the embedment length was modeled because the unbonded tie bar loads were below the yield load. The failure of bonded and unbonded tie bars configurations are generally the same except for the different behavior exhibited by the tie bars.

9.8.4.3. Internal Connection Forces. Similar to the unrestrained connection, the top of the driving side leg is still against the sheet pile and the bottom of the resisting side leg still bears on the opposite side of the sheet pile. As shown in Figure 9.20, a couple is formed from the resultant forces on the concrete legs and now includes the tie bar force, *Fb*. Modeling indicates that the resultant load, *Fr*, can be assumed near the bottom of the resisting leg with y about 1.33 in. (34 mm). The y value generally does not vary with load level.

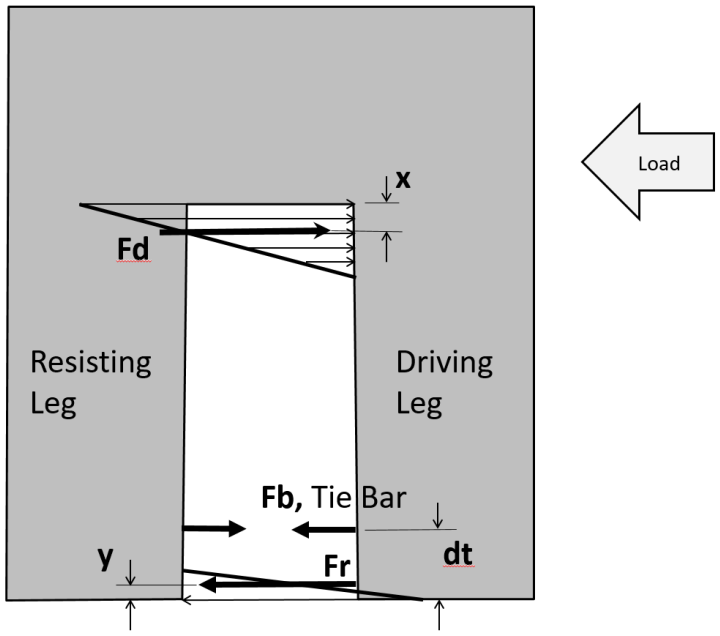

Figure 9.20. Simplified Free Body Diagram Sheet Pile Reaction Forces on Concrete at Tied Connection

9.8.4.4. Unlike the unrestrained connection, the location of the resultant load, *Fd*, generally does not vary with load level. With the tie bar restraining the driving leg, the length of the driving leg in compression is relatively constant as load increases. Thus, the value of x is nearly constant with the load level. As the load approaches the ultimate strength, there are some high pressures exhibited near the top of sheet pile. From modeling of 36 in. (91 cm) embedment lengths, the value of x near ultimate can be taken as about 4 in. (10 cm). With *Fb* and *Fr* canceling each other out, the couple formed between *Fd* and *Fb* resists the external loads. *Fr* and *Fd* create prying action in each leg, but it is offset by *Fb*.

9.8.4.5. Bonded Tie Bars Failure Mode.

9.8.4.5.1. As the hydrostatic head increases, internal bending and prying forces develop at the top and within the connections.

9.8.4.5.2. As the head increases, the resisting side leg experiences restrained cracking at the top of the sheet pile.

9.8.4.5.3. With increasing load, the driving leg begins to crack at the top of the sheet pile and the tie bars are nearly fully engaged.

9.8.4.5.4. As cracking progresses, the tie bars and driving side reinforcement yield.

9.8.4.5.5. As the load increases, the resisting leg fails by crushing of the compression block and load capacity is reduced. The section continues to lose capacity, and the wall begins to deflect excessively and topples over, leading to a complete collapse of the concrete cap.

9.8.4.5.6. Figure 9.21 shows bending moments at the top of the sheet pile as head is increased. The hydrostatic head plotted in Figure 9.21 is at the bottom of the concrete, 3 ft. (0.9 m) below the top of the sheet pile.

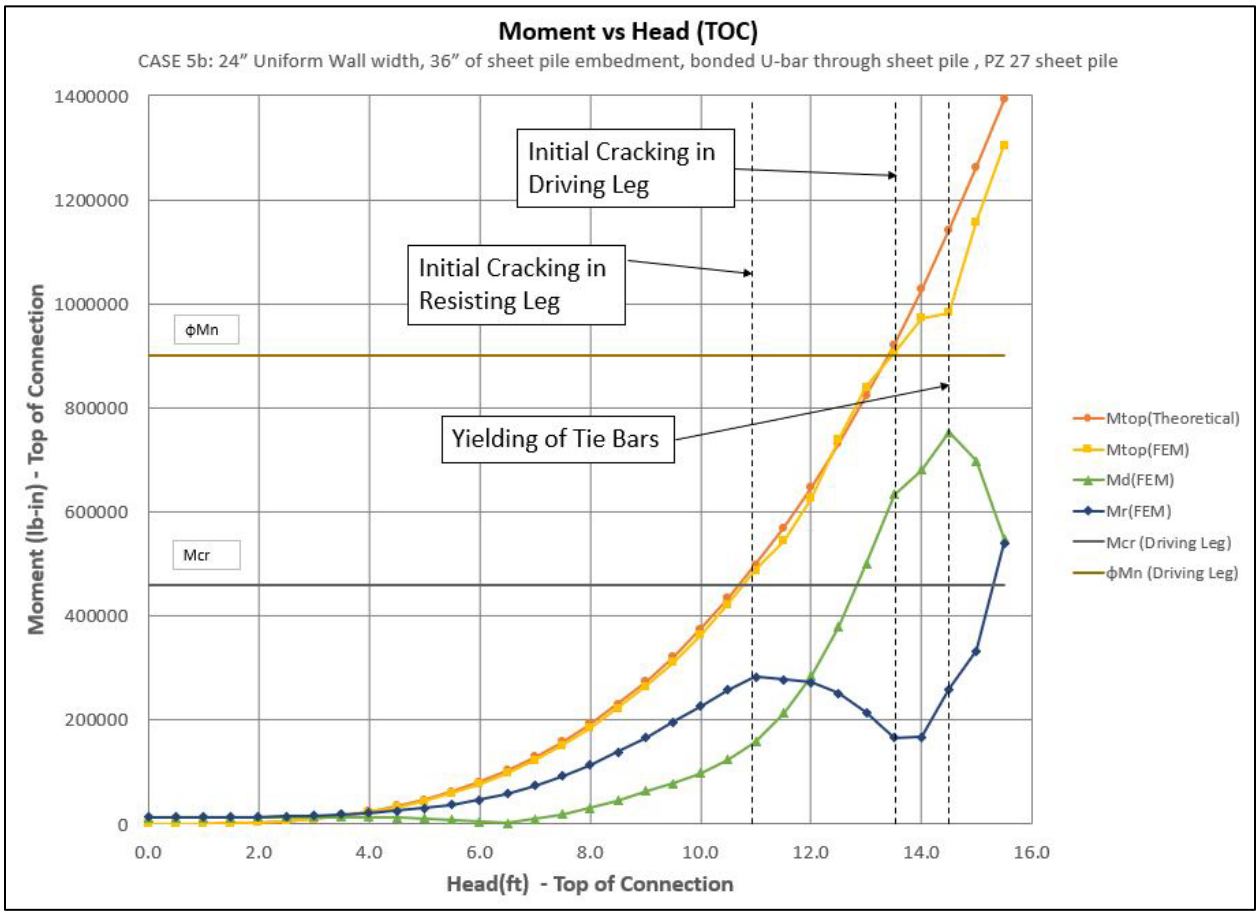

Figure 9.21. Finite Element Results, Restrained Bonded Tie Bar Connection: Moment at Top of Connection Verses Hydrostatic Head

9.8.4.6. Unbonded Tie Bars Failure Mode:

9.8.4.6.1. As the hydrostatic head increases, internal bending and prying forces develop at the top and within the connections.

9.8.4.6.2. As the head increases, the resisting side leg experiences restrained cracking. With increasing load, the driving leg begins to crack and tie bars are engaged.

9.8.4.6.3. As cracking progresses, the driving side reinforcement yields.

9.8.4.6.4. As the load increases, the resisting leg fails by crushing of the compression block and load capacity is reduced. The section continues to lose capacity and the wall begins to deflect excessively and topples over, leading to a complete collapse of the concrete cap.

9.8.4.6.5. Figure 9.22 shows bending moments at the top of the sheet pile as head is increased. The hydrostatic head plotted on the X axis in Figure 9.22 is at the bottom of the concrete, 3 ft. (0.9 m) below the top of the sheet pile in that model.

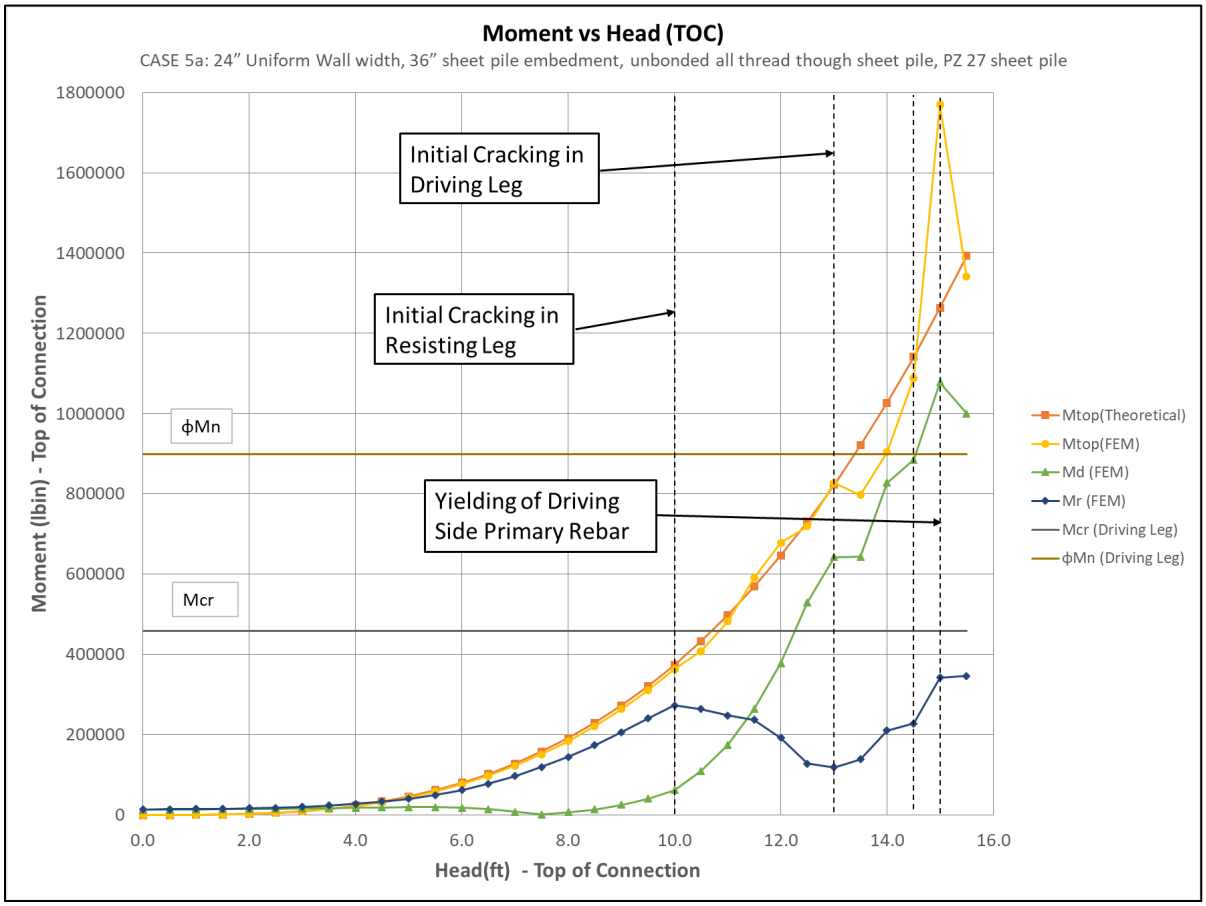

Figure 9.22. Finite Element Results, Restrained Unbonded Tie Bars: Moment at Top of Connection Verses Hydrostatic Head

9.8.5. Structural Design of I-Wall Connections.

9.8.5.1. Cap Geometry. The concrete cap must provide a minimum of 6 in. (15 cm) of cover over the steel sheet pile but not less than 24 in. (61 cm) in width through the connection. Concrete caps generally should be of uniform thickness and abrupt changes in the cap width near the top of the sheet pile are not recommended. As shown in Figure 9.23, battering or tapering of the cap is optional if the minimum cap width requirements above are met, a minimum top width of 18 in. (46 cm) is provided, and batter or taper starts no less than *Wb* above sheet pile.

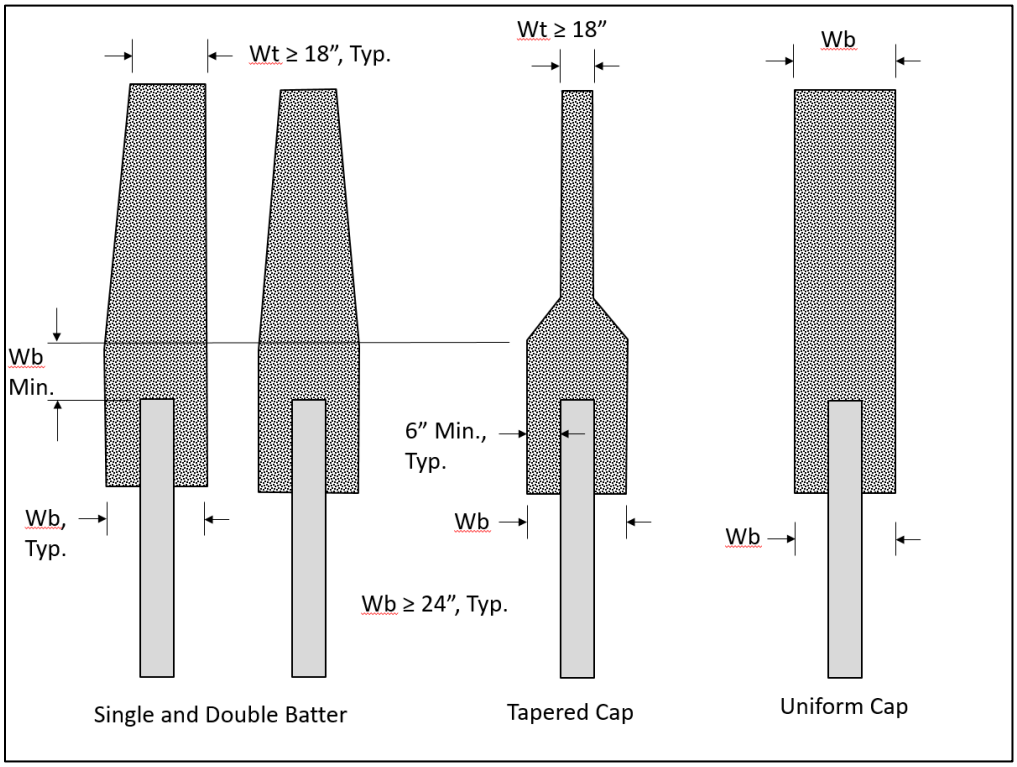

Figure 9.23. Concrete Cap Geometry Requirements

9.8.5.2. Sheet Pile Embedment into the Cap. The embedment of sheet pile is based on the height of the exposed wall. The embedment of sheet pile into the concrete cap must be a minimum of 3 ft. (0.9 m) for walls with up to 12 ft. (3.7 m) of exposed wall height as defined in Figure 9.12 or above the top of sheet pile, whichever is greater. I-walls 12 ft. (3.7 m) and higher by the previous definition must have a minimum sheet pile embedment of 42 in. (107 cm) into the concrete cap.

9.8.5.3. Location of the Connection. Where possible, the connection should be located away from the region of maximum moment in the I-wall. Generally, the I-wall connection should be located nearest to grade as practical as this improves constructability and is above the typical maximum moment region.

9.8.5.4. Reinforcement Details. Adequate sheet pile embedment into the concrete cap must be provided to allow full development of the driving side primary reinforcement. To ensure ductile behavior, unrestrained connections must not be used in new design. Reinforcement must be provided to restrain the driving leg in the lower region of the connection. For new walls, this is done by placing tie bar reinforcement through holes in the sheet pile. An example is shown in Figure 9.18. Note that ductility comes from yielding of the primary wall reinforcement and not yielding of the tie bars.

9.8.5.5. Concrete Design. The reinforced concrete section at the top of the connection is designed for moment and shear. The tie reinforcement is designed to restrain the driving side leg.

9.8.5.6. Bending Moment. The internal moment at the top of the connection is distributed into both the resisting and driving side legs. Most of the moment is taken by the driving side leg. Therefore, the driving side leg is designed to resist M_a, the total internal moment at the top of the connection. To determine the moment capacity per foot of wall, it is easier to look at a sheet pile pair as it provides a symmetric section. When looking at a Z-type sheet pile pair, the driving leg section takes the form of an inverted T-type or U-type concrete section. The T-type section is shown in Figure 9.24.

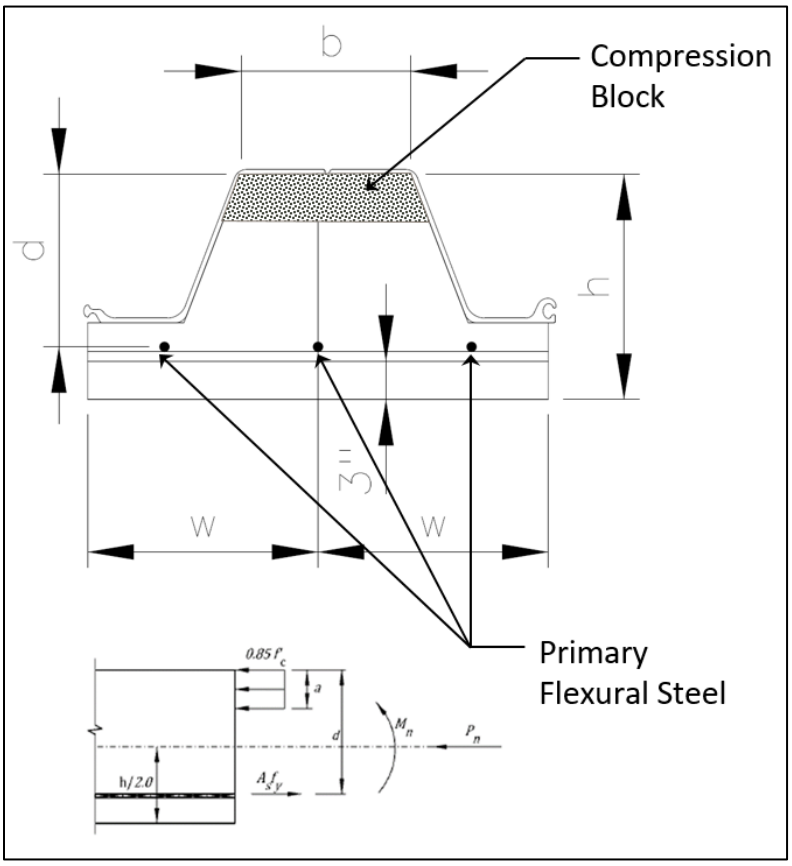

Figure 9.24. Driving Leg: General Cross Section

9.8.5.6.1. The reinforced concrete driving side leg cross section is designed for the factored moment, *Mu*, at the top of the connection over the width of the sheet pile pair, *2w*. The width of the compression block is taken as the dimension *b*, shown in Figure 9.24. The depth to the tension reinforcement *d*, as shown in Figure 9.24, is calculated by subtracting the cover, the bar diameter of the longitudinal shrinkage and temperature bars, and one half the diameter of the primary tensile reinforcement from the driving leg. The capacity of the driving leg pair can be divided by the width of the pair, *2w,* to obtain the moment capacity per foot of wall.

9.8.5.6.2. The factored moment can be calculated by the following equations where the strength requirements is $\varphi M_n \geq M_u$, where $\varphi = 0.9$ according to ACI 318.

$$M_u = LF \; x \; M_a \; x \; 2w \qquad \text{(Equation 9.7)}$$

Where:

LF = Load Factor. See paragraph 9.7.5.

Other variables are defined in the previous paragraphs.

9.8.5.7. The nominal flexural strength of the driving side leg is calculated by the following equations:

$$M_n = A_s f_y (d - a/2) \qquad \text{(Equation 9.8)}$$

$$a = A_s f_y / (0.85 * bw * f'_c) \qquad \text{(Equation 9.9)}$$

Where:

A_s = area of primary wall reinforcement over the entire section width, 2w

f_y = yield strength of reinforcing steel

d = distance from extreme compression fiber of driving side leg to primary wall reinforcement, in inches (see Figure 9.24)

f'_c = concrete compressive strength

bw = distance b of driving leg side leg, in inches (see Figure 9.24)

9.8.5.8. Shear. Due to prying action and that the two concrete legs are in opposite shear, the shear in the driving side leg is greater than V_a, the total internal shear at the top of the connection. Similar to moment, the shear design section is taken from a sheet pile pair. The driving side leg section over the width of a sheet pile pair, *2w*, is checked for shear strength at the top of the connection. The factor shear load can be calculated by the following equations where the strength requirements is $\phi V_n \geq V_u$ and $\phi = 0.75$ according to ACI 318.

$$V_n = V_c = 2\sqrt{f'_c}\, bw\, d \qquad \text{(Equation 9.10)}$$

$$V_u = LF * V_d * 2w \qquad \text{(Equation 9.11)}$$

$$V_d = 1.5V_a \qquad \text{(Equation 9.12)}$$

where variables are previously defined.

9.8.5.9. Tie Bar Design. The load in the tie bar can be determined from the free body diagram, but it is an iterative process. The tie bar tension load, P_t, can be estimated by using the following equations. The tie bar strength requirement is $\phi Pn \geq Pu$ and $\phi = 0.9$, according to ACI 318.

$$P_n = f_y A_{st} \qquad \text{(Equation 9.13)}$$

Where:

P_n = tie bar tension capacity

f_y = yield strength of the tie bar

A_{st} = area of the tie bar per foot of wall

P_u = Factored load in the tie bar

$$P_u = \text{LF}(P_t) \qquad \text{(Equation 9.14)}$$

Where:

LF = load factor defined previously

P_t = tie bar load per ft. of wall is estimated by using the following empirical equation:

$$P_t = M_a/(E - x - d_t) \qquad \text{(Equation 9.15)}$$

Where:

M_a = applied moment at the top of the connection per foot of wall

E = sheet pile embedment, inches

x = distance from top of sheet pile to Fd. For design use 4 in. (10 cm).

d_t = distance from bottom of concrete to center of the tie bar. For design, use concrete cover + 1/2 diameter of the tie bar. Minimum concrete cover for tie bars will be 4 in. (10 cm) to account for placement of hole in sheet pile.

9.9. Mandatory Requirements.

9.9.1. Design elevation of resisting side soil must be selected to accommodate expected degradation from scour and erosion or from site alterations.

9.9.2. The factors of safety to be used for analysis and design of the rotational failure mode must exceed the minimum values in Table 9.1.

9.9.3. When full numeric analysis methods are not used for calculation of deflections for floodwalls, the maximum water heights in Table 9.4 must be used for floodwalls, dam walls, and dam crest walls.

9.9.4. Factors of safety for global stability must meet or exceed the minimum values in Table 9.2.

9.9.5. Floodwalls, dam walls, and dam crest walls founded in soils with properties outside the range of soils in Table 9.3 must be analyzed with full numeric analysis methods to compute deflections.

9.9.6. Factors of safety for internal erosion must meet or exceed the values in Table 7.3.

9.9.7. The wall section must provide the required minimum sectional properties over the service life of the wall, after allowance for possible loss of material due to corrosion, abrasion, or other detrimental effects.

9.9.8. Steel piling or structural steel components that are part of walls must be designed according to ANSI/AISC 360-16 with the minimum load factors specified in section 9.7.4.

9.9.9. Aluminum components of cantilever pile walls must be designed using the Aluminum Design Manual LRFD equations with single load factors, as described in section 9.7.4.

9.9.10. Strength design of prestressed concrete piles must follow the basic criteria set forth in ACI 318, with minimum load factors provided in EM 1110-2-2104 as described in paragraph 9.7.5.

9.9.11. A concrete cap must provide a minimum of 6 in. (15 cm) of cover over the steel sheet pile but not less than 24 in. (61 cm) in width through the connection.

9.9.12. The embedment of sheet pile into the concrete cap must be a minimum of 3 ft. (0.9 m) for walls with up to 12 ft. (3.7 m) of exposed wall height, as defined in Figure 9.12, or above the top of sheet pile, whichever is greater. I-walls 12 ft. (3.7 m) and higher by the previous definition must have a minimum sheet pile embedment of 42 in. (107 cm) into the concrete cap.

9.9.13. To ensure ductile behavior, unrestrained connections must not be used in new design of new walls with concrete caps. Reinforcement must be provided to restrain the driving leg in the lower region of the connection.

Chapter 10
Analysis and Design – Passive Single Anchor Pile Walls

10.1. Introduction. Anchored retaining walls are used when the height of a nongravity retaining wall exceeds the height suitable for a cantilever. Tie rods for passive anchors walls are installed with little or no tension. The anchorage develops passive resistance through movement. This chapter describes analysis and design of pile walls with a single passive anchor. General requirements are described in Chapter 4. Site information required for analysis is describe in Chapter 5 and the loads for analysis are described in Chapter 6. Design of post-tensioned tieback walls are performed using different methods covered in Chapter 11. Example calculations that demonstrate the guidance in this chapter are provided in Appendix G.

10.2. Performance Modes.

10.2.1. General Probable Failure Modes. Analysis and design to address the general probable failure modes described in Chapter 3 are performed using performance modes, as described in Chapter 4. Each failure mode described in Chapter 3 has a corresponding performance mode for analysis and design. Performance modes for single passive anchor pile walls include:

10.2.1.1. Rotational Stability (PFM AP-1);

10.2.1.2. Global Stability (PFM AP-2);

10.2.1.3. Anchor Stability (PFM AP-3);

10.2.1.4. Internal Erosion (PFM AP-4); and

10.2.1.5. Strength of Structural Elements (PFM AP-5).

10.2.2. Other Contributing Factors. Settlement, deflection, and liquefaction and cyclic softening are also evaluated as they may affect the other performance modes or serviceability.

10.2.3. Anchor Walls in Seismic Environments. Anchored walls sited in seismic environments should be carefully evaluated. The anchors and the embedded portion of the wall are critical to the stability of the wall. Loss of shear strength along the anchor or in the passive zone of the embedded wall may result in overall failure of the wall. As a general design principle, the embedded portions of the walls and the anchors should not be located in zones of liquefiable soils. Seismic performance, liquefaction, and cyclic softening are covered in Chapter 17.

10.3. Rotational Stability.

10.3.1. General Assumptions. Rotational stability is governed by the piling penetration depth or by a combination of penetration and anchor position. Behavior of the wall/soil system is complex, therefore, simplifying assumptions are employed in the classical design techniques. The major assumptions include:

10.3.1.1. Deformations are sufficient to produce limiting active and developed passive earth pressures at any point on the wall/soil interface.

10.3.1.2. The anchor is assumed to prevent lateral motion at the anchor elevation.

10.3.2. Free Earth Versus Fixed Earth Methods. Classical anchored wall design methods include the "Free Earth" method and variations of the "Fixed Earth" method. Typically, the Fixed Earth method results in deeper required sheet piles and higher bending moments than the Free Earth method with Rowe's bending moment reduction applied. Research and USACE experience indicate that designs that use the Free Earth method are sufficiently stable with adequate sheet pile strength. There has not been a case of failure with the Free Earth method and therefore it is preferred for design. Both methods are provided in the CASE PC software CWALSHT. The Fixed Earth method is provided for comparison only.

10.3.3. Determination of Penetration Depth.

10.3.3.1. Because of the flexibility of the sheet piling, the Free Earth method predicts larger moments than those that actually occur. This shortcoming of the Free Earth method is overcome by using Rowe's moment reduction curves, as described in section 10.8.2. In the Free Earth method, the anchor is assumed to be a simple support (refer to Figure 10.1) about which the wall rotates as a rigid body.

10.3.3.2. Due to the presence of the anchor, there is a tendency of the wall to produce a passive condition in the retained soil above the anchor. However, it is assumed that the wall is only subjected to the net active pressure distribution as shown in Figure 10.1. The definition for net active pressure is provided in Chapter 9. The required depth of penetration (d) is determined from the equilibrium requirement that the sum of moments about the anchor is zero.

10.3.4. Determination of Anchor Force. After the depth of penetration has been determined, the anchor force is obtained from equilibrium of horizontal forces. The position of the anchor affects both depth of penetration and anchor force. It is necessary to consider several anchor positions to arrive at the optimal combination. For initial estimates, anchor positions may be assumed at one-fourth to one-third of the exposed wall height below the top of wall.

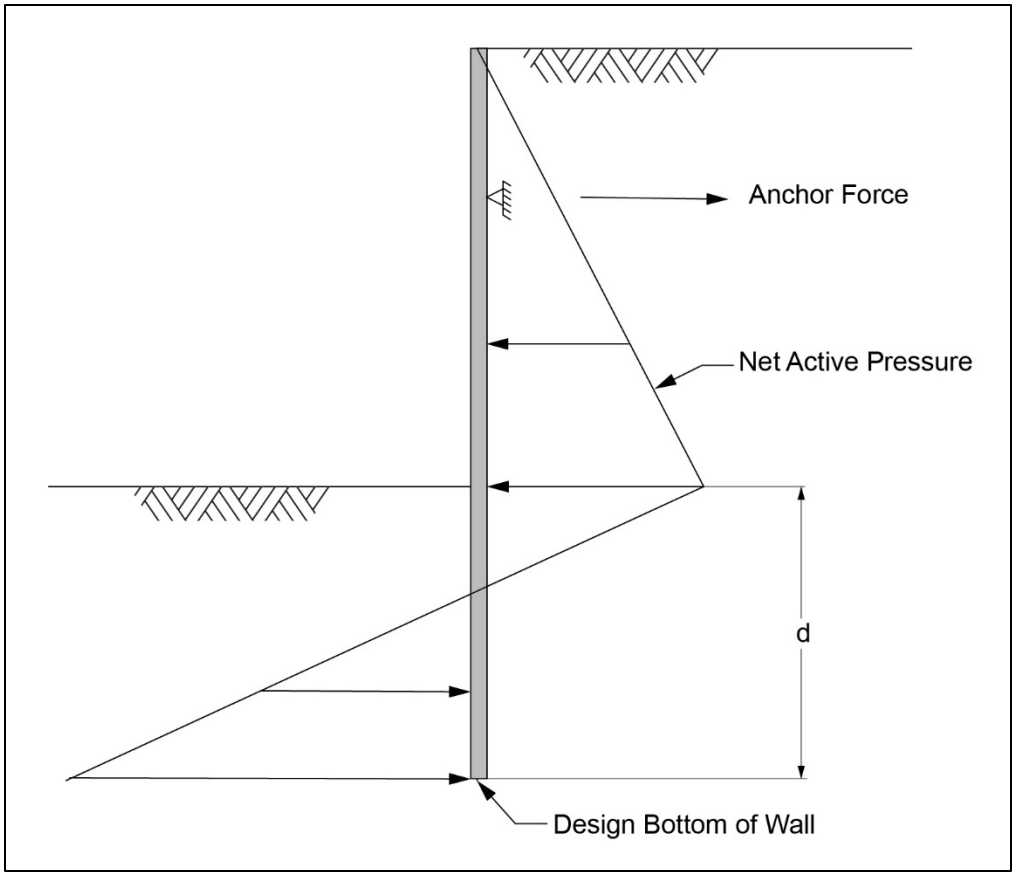

Figure 10.1. Design Pressure Distribution for Free Earth Design of Anchored Walls

10.3.5. Minimum Requirements. Developed shear strength parameters (ϕ'_d and c'_d) are used for computation of the required sheet pile tip depth. Minimum values of passive factor of safety for stability analysis of passive single anchored walls are provided in Table 10.1. The soil strengths in the equations for anchor design should be consistent with the properties (Q, R, or S) used for stability design.

Table 10.1
Minimum Factors of Safety for Determining the Depth of Penetration Applied to the Passive Pressures (Anchored Sheet Piling, Anchor Walls, and Deadman Anchors)

	Site Classification		
Load Category	Well Defined	Ordinary	Limited
Usual	1.5	1.7	4
Unusual	1.3	1.5	3
Extreme	1.1	1.3	2.6

10.4. Global Stability.

10.4.1. General. Global stability analysis needs to be assessed for all relevant loading cases (see Chapter 6) using appropriate combinations of strength (Q, R, or S) and seepage conditions. Potential failure along circular, non-circular block, or general non-circular potential slip surfaces should be considered in the analyses. EM 1110-2-1902 and EM 1110-2-1913 provide guidance on analysis methods, selection of soil strength, and seepage conditions for various loading conditions. The design must meet the minimum factors of safety for global stability provided in Table 10.2.

10.4.2. Global Stability Surfaces. Global failure surfaces passing around the sheet pile tip and behind the anchorage should be evaluated. When a failure surface crosses behind the anchorage there will be no external restraint force. Global stability analysis can be performed by specifying a minimum distance (horizontal distance between the wall face and front of anchorage) for the entry of the slip surface.

10.4.3. Additional Considerations. Additional considerations apply to cases where a weak zone may be present below the sheet pile tip. Slip surfaces through the anchorage can be evaluated using an external load in the analysis. The external load should not exceed the allowable anchor load as described in section 10.5. Sufficient distance should be provided between the anchorage and the critical global slip surface to develop the full passive resistance. Where stability requirements cannot be met, the anchors may be lengthened or the wall geometry can be changed.

Table 10.2
Minimum Factors of Safety for Global Stability

	Site Classification		
Load Category	Well Defined	Ordinary	Limited
Usual	1.4	1.6	3.3
Unusual	1.3	1.5	3
Extreme	1.1*	1.4*	2.3
*For MDE (and MCE) earthquake, seismic global stability and post-seismic performance are evaluated according to Chapter 17.			

10.5. Anchor Stability.

10.5.1. General. Design anchor forces are calculated in the rotational stability performance mode using developed shear strength parameters (ϕ'_d and c'_d). This anchor force is obtained from equilibrium of a typical 1-foot slice of the wall. In the actual system the restraint to the wall consists of discrete tie rods attached to the wall through wales. The tie rods are attached to another support mechanism (termed the “anchor” herein) at their embedded ends and remote from the wall.

10.5.1.1. Two anchor configurations are illustrated in Figure 10.2 and capacities of some anchor configurations are discussed in the following sections. The strength appearing in the equations associated with anchor design should be consistent with those (Q, R, or S) used for stability design. The capacity of the anchors should be sufficient to develop the yield strength of the tie rods.

10.5.1.2. Anchor stability relies on the soil embedment and shear strength for capacity. Construction activities in the vicinity of existing anchors could impact the performance of the anchor and could result in failure. Activities near the wall should be evaluated to verify that they will not adversely affect the wall or anchor performance.

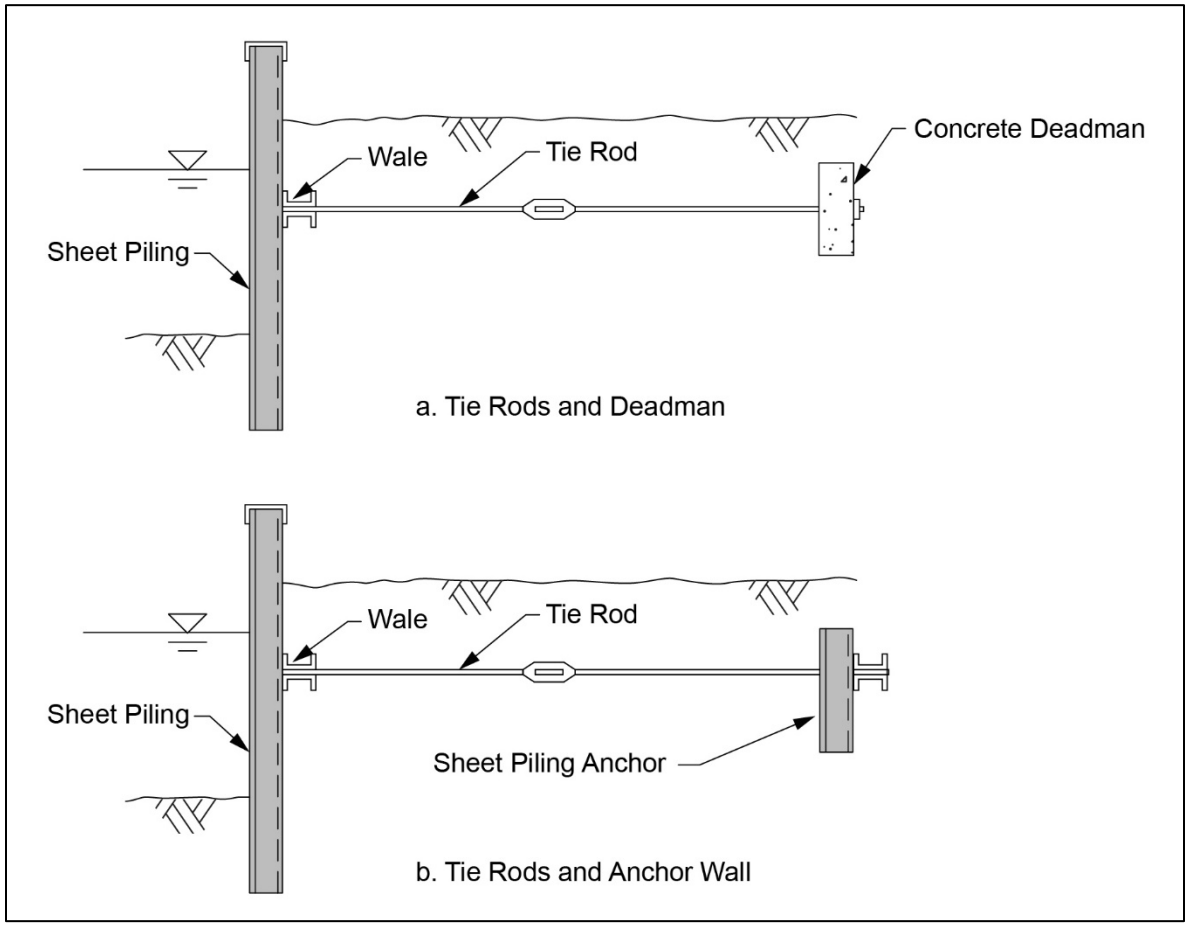

Figure 10.2. Anchor Configurations

10.5.2. Continuous Anchors.

10.5.2.1. A continuous anchor consists of a sheet piling or concrete wall installed parallel to the retaining wall (see Figure 10.2b). The continuous anchor derives its resistance from differential passive and active pressures produced by interaction with the surrounding soil. A minimum distance between the retaining wall and anchor is required to develop the anchors full capacity. Figure 10.3 and the following descriptions describe these requirements for a homogeneous soil system.

10.5.2.2. Under the assumptions employed in the stability analysis, a zone of soil (bounded by line a-b in Figure 10.3) behind the retaining wall is at its limiting active state. Anchors between the back of the wall and line a-b will add no resistance. To permit development of passive pressures, an additional zone of soil (bounded by line b-d in Figure 10.3) is required. If the anchor wall intersects line a-c, interaction between the anchor wall and the retaining wall may increase the soil pressures on the retaining wall, thus invalidating the assumptions in the stability analysis. If spatial constraints will not allow for the full anchor load to develop, then other wall systems or anchorages should be explored.

10.5.2.3. For nonhomogeneous soil systems, the boundaries defining minimum spacing of the anchor wall may be estimated by the procedures used in the "Fixed Surface" wedge method. This method is described in CWALSHT User's Guide (Dawkins, 1990).

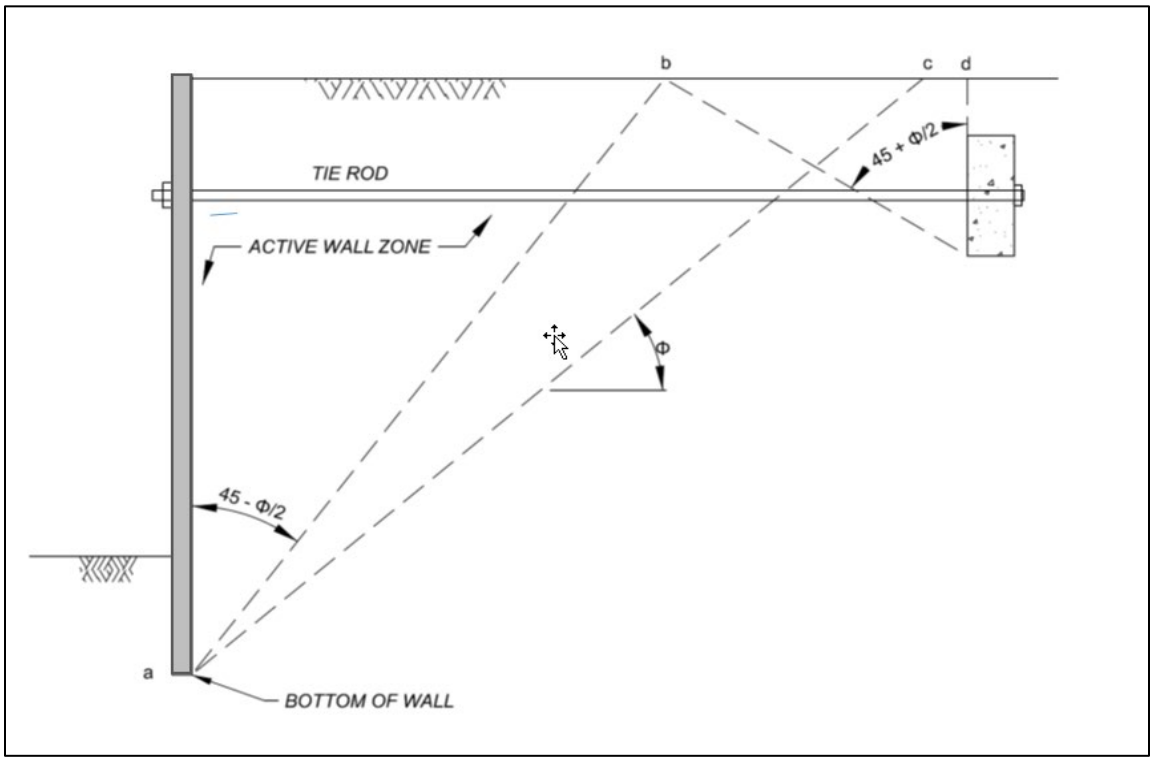

Figure 10.3. Minimum Anchor – Wall Spacing for Full Passive Anchor Resistance in Homogeneous Soil

10.5.2.4. Full Anchor Capacity. Active and passive pressures developed on the anchor wall are shown in Figure 10.4 for a homogeneous soil system. In Figure 10.4, *h/H* is 1/3 to 1/2 (Teng, 1962 and Terzaghi, 1943). The capacity of the anchor wall is given by:

$$C_{ac} = P_P - P_A \qquad \text{Equation 10.1}$$

Where:

C_{ac} = allowable anchor wall capacity per foot of continuous anchor wall

P_P = resultant of the developed passive pressures in front of the anchor wall

P_A = resultant of the active pressures in back of the anchor wall

For homogeneous soils, the general equations for the equations for resultant forces for the drained, S-Case conditions are as follows:

$$P_P = \gamma' H^2 \frac{K_P}{2} + 2c'_d H\sqrt{K_P} \qquad \text{Equation 10.2}$$

and

$$P_A = \gamma' H^2 \frac{K_A}{2} - 2c' H\sqrt{K_A} + \frac{2c'^2}{\gamma'} \qquad \text{Equation 10.3}$$

Where:

γ' = effective soil unit weight

H = as shown in Figure 10.4

K_A and K_P = active and developed passive earth pressure coefficients computed according to Chapter 6

c'_d = drained, developed shear strength cohesion intercept (typically 0)

c' = drained shear strength cohesion intercept (typically 0)

For homogeneous soils with undrained ($\varphi = 0$) soil strengths and $K_A = K_P = 1.0$:

$$P_P = \frac{\gamma H^2}{2} + 2s_{ud}H \qquad \text{Equation 10.4}$$

and

$$P_A = \frac{\gamma H^2}{2} - 2s_u H + \frac{2{s_u}^2}{\gamma} \qquad \text{Equation 10.5}$$

Where:

γ = soil unit weight

s_{ud} = developed undrained soil shear strength

s_u = undrained soil shear strength

K_A and K_P are active and developed passive earth pressure coefficients computed according to Chapter 6. The earth pressure coefficients should be calculated using the same developed shear strength parameters used for the stability analysis of the retaining wall.

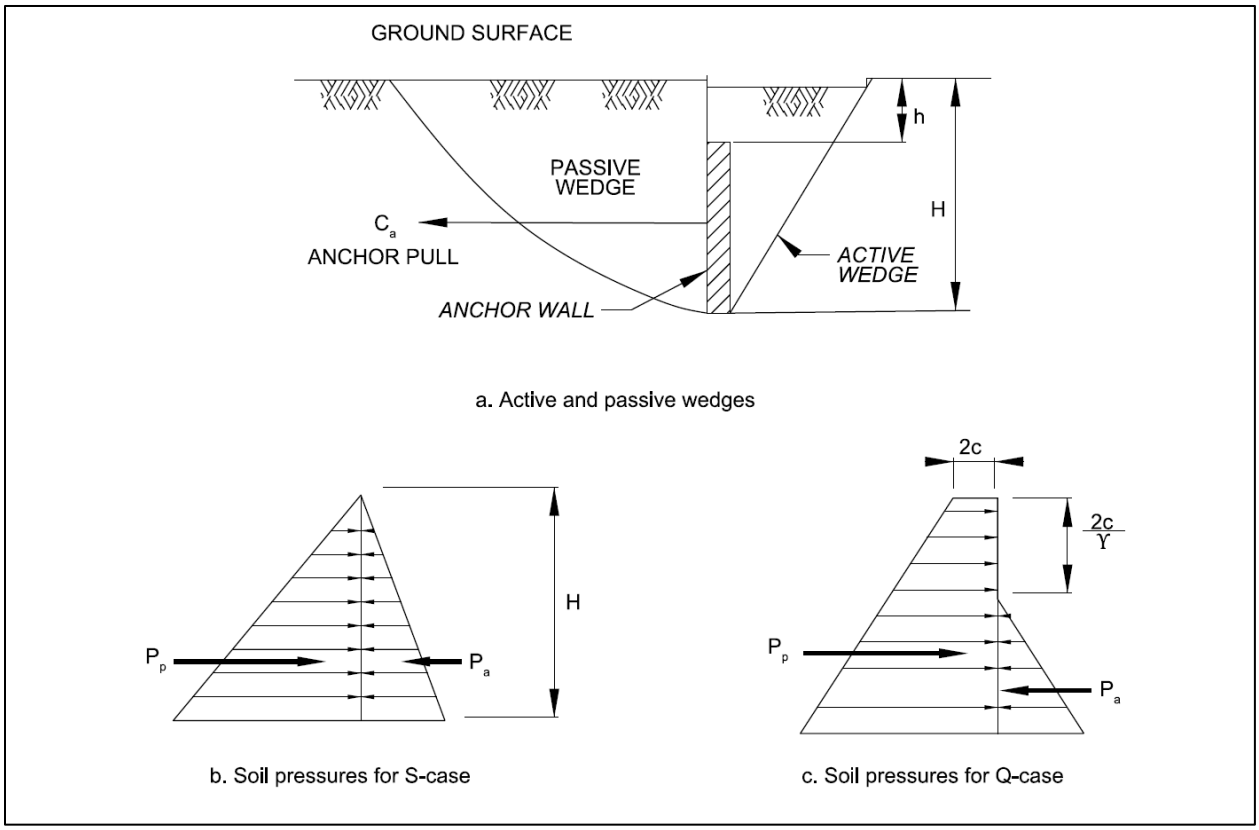

Figure 10.4. Resistance of Continuous Anchor Wall

10.5.2.5. Reduced Anchor Wall Capacity. Physical constraints may not allow for the minimum spacing between anchor wall and retaining wall. In such cases the reduced anchor wall capacity can be evaluated by the procedures presented in NAVFAC DM 7.2 (Department of Navy, 1982).

10.5.3. Discontinuous Anchors.

10.5.3.1. Discontinuous anchors (or dead men) are usually composed of relatively short walls or blocks of concrete. Figure 10.5 illustrates the stress distribution and the free-body diagram for forces acting on the deadman. The capacity of a deadman near the ground surface for S-case strengths ($c = 0$) may be taken as:

$$C_a = L(P_P - P_A) + \frac{K_0\gamma'}{3}\left(\sqrt{K_P} + \sqrt{K_A}\right)H^3 tan(\phi'_d) + W tan(\phi'_d) \qquad \text{Equation 10.6}$$

and, for Q-case strengths ($\phi'_d = 0$, K_A and $K_P = 1.0$)

$$C_a = L(P_P - P_A) + 2s_{ud}H^2 + LBs_{ud} \qquad \text{Equation 10.7}$$

Where:

C_a = allowable anchor load per discrete anchor

L = length of the deadman parallel to the retaining wall

P_A and P_P = resultants of active and developed passive soil pressures (Equation 10.2 through Equation 10.5)

K_0 = at-rest pressure coefficient

γ' = effective soil unit weight

K_A and K_P = active and developed passive earth pressure coefficients

H, W = as shown in Figure 10.5

ϕ'_d and s_{ud} = developed angle of internal friction and undrained shear strength, respectively

B = thickness of the deadman perpendicular to the retaining wall

10.5.3.2. Discontinuous Anchors at Large Depth. Anchors at large depth require additional consideration. Their capacities may be calculated as the bearing capacity of a vertically oriented footing with a depth at the mid-height of the anchor (Terzaghi, 1943).

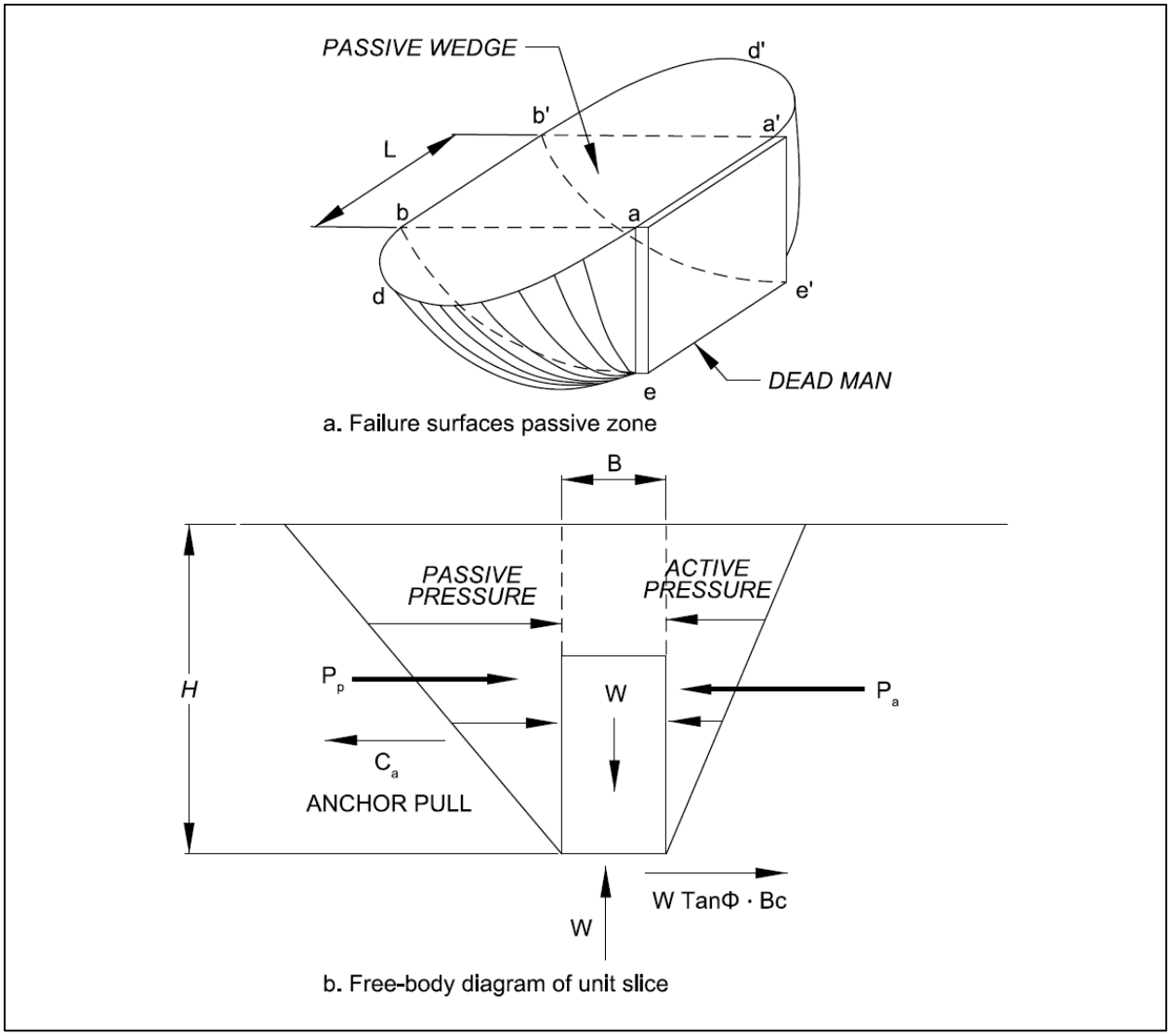

Figure 10.5. Resistance of Discontinuous Anchor (Deadman)

10.5.4. Pile Anchors. Capacities of anchors composed of tension piles or pile groups (see Figure 10.6), are evaluated by the procedures provided in EM 1110-2-2906. Note that battered piles connected at the sheet piling will create vertical forces in the sheet pile that must be accounted for in the analysis and design.

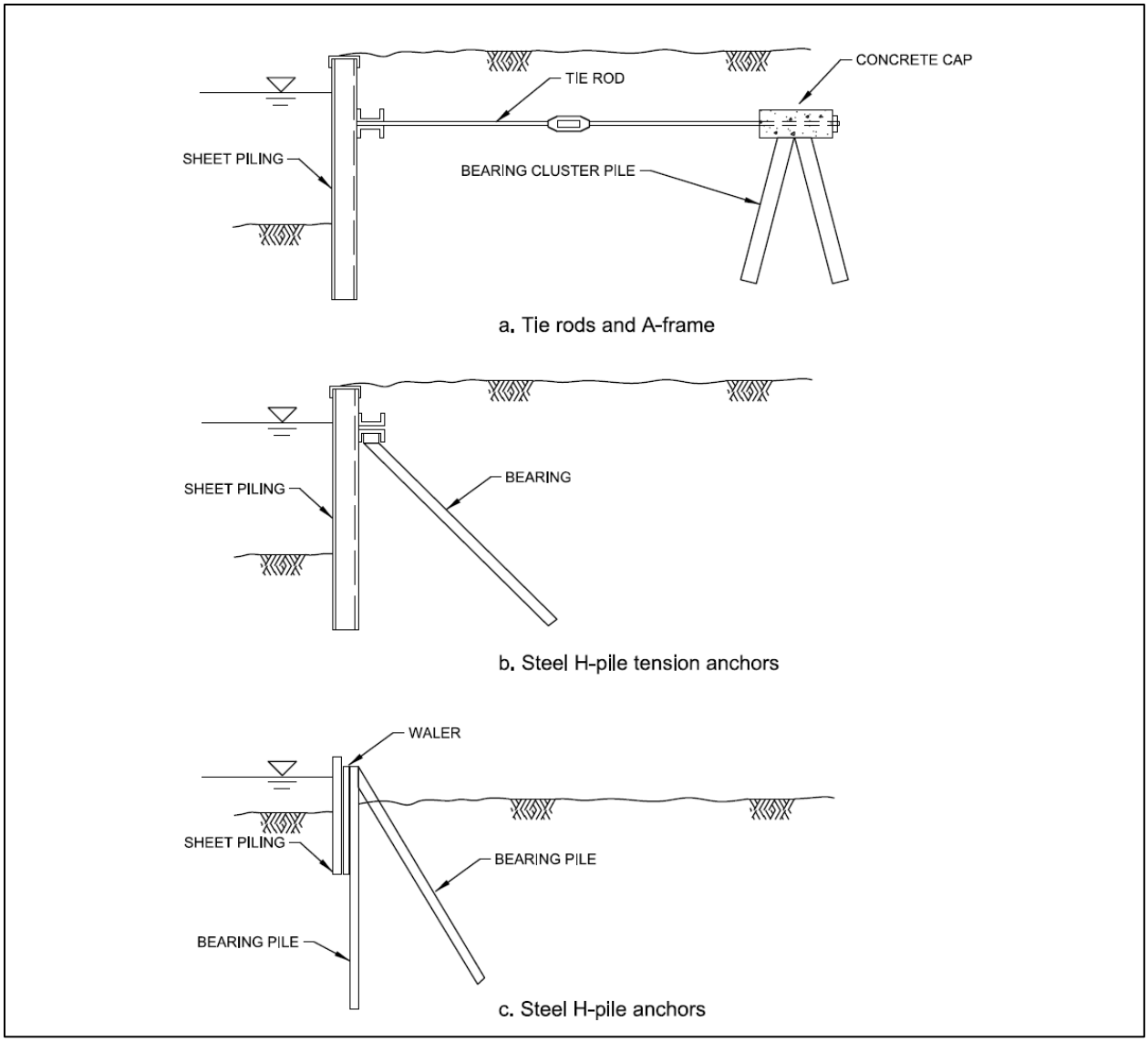

Figure 10.6. Pile Anchors

10.6. Internal Erosion. The internal erosion performance mode for anchored pile walls is similar to shallow-founded walls. Head differential may result across the wall due to flow from the retained side toward the lower waterside. Evaluation methods would be the same as described in section 7.7.

10.7. Settlement and Deflection.

10.7.1. General. Settlement (movement from soil compression) and deflection (lateral movement and rotation under loading) are serviceability limit states. They very rarely are associated with wall failure but can affect use and operability. Settlement around anchors can increase tension forces in them.

10.7.2. Settlement.

10.7.2.1. General. Wall settlement is a concern in the overall system stability, especially in scenarios when fill is being placed. In most cases the wall will settle along with the soil mass into which it is embedded. The geotechnical designer must evaluate settlements that may result around a wall and anchor system. The design should verify that the anchor and wall connections do not become overstressed.

10.7.2.2. Settlement Considerations at Top of Wall. The top of anchored pile walls may not be easily modified. The designer should consider the settlement estimates. Overbuild may be provided to prevent settlement of the wall below design grade. If possible, concrete capping should be delayed until a major portion of the settlement has occurred. The "after settlement" configuration is used in the wall design analyses.

10.7.2.3. Lateral Consolidation. The loads applied to the foundation by the wall are essentially horizontal. The designer has to be cognizant of the fact that lateral consolidation could occur with sustained loading. This should be evaluated and the wall system should be capable of compensating for this movement.

10.7.2.4. Settlement Around Tie Rods. Tie rods placed above loose or soft soils can be subjected to loads greater than that computed by conventional methods. Compression of soils below tie rods can occur due to volume changes, distortion, or consolidation. The weight of the overlying soils will induce additional loads as the rod deflects. Methods used in reducing or eliminating the settlement effects include supporting the tie rod or encasing it in conduit. Where excavation is necessary to place an anchor, the backfilled material should consist of select soil. The backfill should be compacted to a degree that will limit post-construction settlements.

10.7.2.5. Tie Rod Support. The tie rod design is based on the assumption that the rod is straight and centrically loaded. It is necessary to protect the tie rod against any influence which tends to induce bending in the rod. Attention should be directed to the tie rod-to-wale connection and tie rod-to-anchor connection to eliminate eccentricities at these points.

10.7.3. Deflection.

10.7.3.1. General. Passive single anchor pile walls are flexible systems. Like other wall systems, the minimum design safety factors should help to limit any damaging wall movements. But like cantilever pile walls, soil passive pressure is mobilized as the wall is loaded. The anchor helps limit movement compared to cantilever pile walls, but some movement is required to develop the passive anchors. Therefore, passive single anchor pile walls are normally used for situations in which a small amount of movement is acceptable. For circumstances in which control of deflection is critical, stiffer wall systems, such as pile-founded walls or stiff tieback walls, should be considered.

10.7.3.2. Reduction of Deflections. Deflections can be reduced by using piles with greater stiffness, adding some prestressing to the anchor, using a stiffer anchor, and sometimes by driving the piles deeper. However, when the ground is excavated to install the anchors, it is usually impractical to prestress the anchor before backfilling. Using deep foundations with piles or drilled shafts will usually provide more anchor stiffness than using wall or deadman type anchors. Wall or deadman type anchors must move to develop passive pressures.

10.7.3.3. Calculating Deflections. To calculate deflections for passive anchor systems, software incorporating soil-structure interaction is required. Limit equilibrium methods used for programs, such as CWALSHT, are not capable of accurately calculating deflections. They calculate the response of the structure to assumed forces and are not capable of calculating movement of the soil. See Chapter 16 for more information on analysis methods.

10.8. Strength of Structural Elements.

10.8.1. Structural Analysis.

10.8.1.1. Bending moments, shears, and anchor force are calculated by the free earth analysis described previously. Design penetration of the piling is based on a factor of safety for stability applied to soil strengths. To avoid compounding factors of safety, the sheet piling is designed to resist structural forces produced by soil pressures calculated using a factor of safety of 1 for both active and passive pressures.

10.8.1.2. However, a majority of failures of anchored walls occur in the tie rods, wales, and anchors. Therefore, the design loads for the tie rods, wales, and anchors is determined from analyses used to compute the sheet pile depth that include factor of safety on the passive earth pressures.

10.8.2. Design of Sheet Piling. Strength and serviceability of sheet piles used for either the wall or the anchor are provided in section 9.7. The vertical component of inclined anchor forces shown in Figure 10.8 is included in the strength design analysis. Bending moments for design may be decreased as described in the following paragraphs when applicable.

10.8.2.1. Moment Reduction for Anchored Walls. Rowe (1952, 1955a and b, 1956, 1957a and b) demonstrated that the Free Earth method overestimates the maximum bending moment in anchored walls with horizontal tie rods. The reduced bending moment for design (M_{des}) is given by:

$$M_{des} = M_{max} R_M \qquad \text{Equation 10.8}$$

Where:

$M_{\max}$ = maximum bending moment predicted by the Free Earth method

R_M = reduction factor depending on wall geometry, wall flexibility, and foundation soil characteristics

10.8.2.2. Moment Reduction Factor for Granular Foundation Soils. When the soil below the dredge line is granular, the magnitude of the reduction factor (R_m) is a function of a flexibility number given by:

$$\rho = H^4/EI \qquad \text{Equation 10.9}$$

Where:

H = total length of the sheet piling (ft.)

E = modulus of elasticity of the pile material (psi)

I = moment of inertia (in^4) per foot of wall

Curves of R_m as a function of Rowe's stability number are given in Figure 10.7 for "loose" and "dense" foundation material and several system geometries.

10.8.2.3. Moment Reduction Factor for Cohesive Foundation Soils. Moment reduction factors for piles in homogeneous cohesive soils depend on the stability number (S_n) given by:

$$S_n = 1.25\left(\frac{c}{P_v}\right) \qquad \text{Equation 10.10}$$

Where:

c = cohesive strength of the soil

p_v = effective vertical soil pressure on the retained side of the wall at the elevation of the dredge line

Curves for R_m as a function of Rowe's stability number are given for various combinations of system parameters in Figure 10.7.

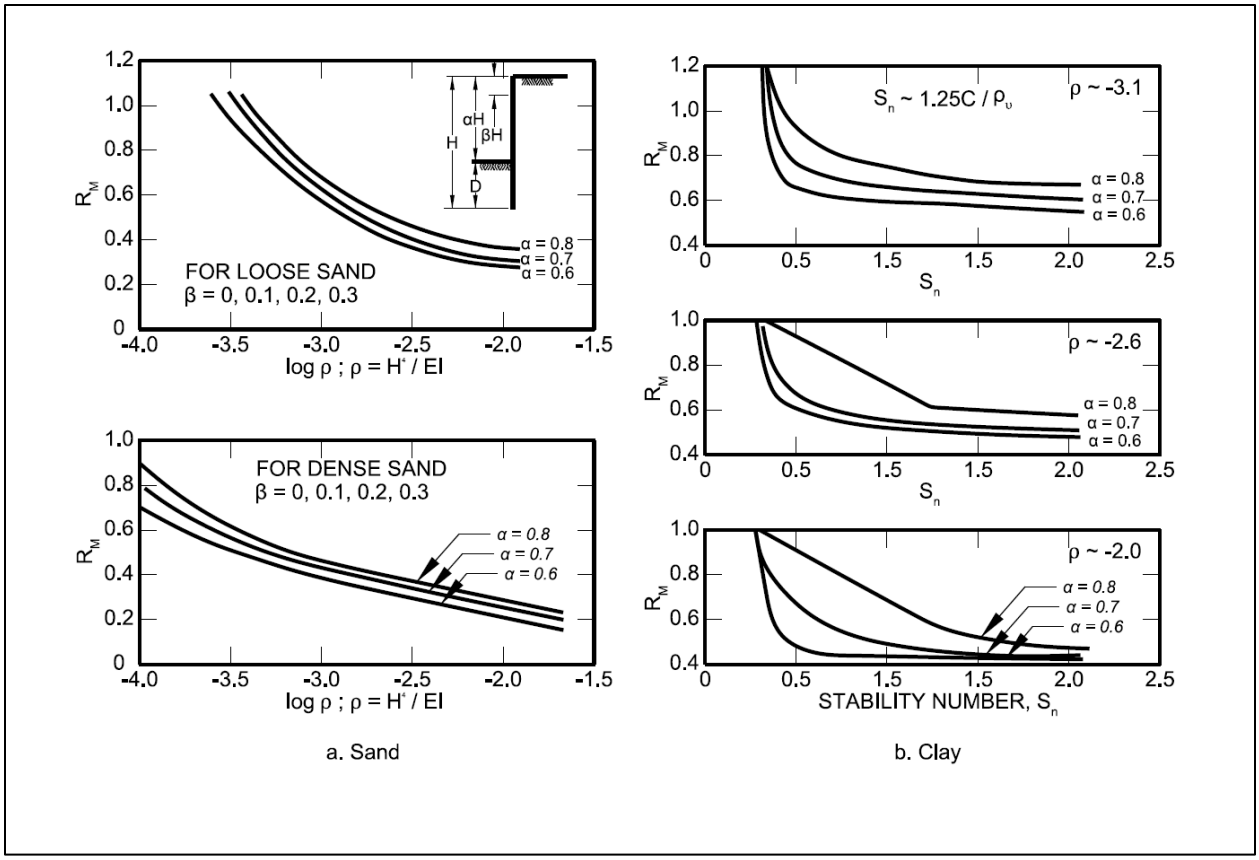

Figure 10.7. Rowe's Moment-Reduction Coefficients (After Bowles, 1982)

10.8.3. Design Anchor Force.

10.8.3.1. When the tie rods are installed perpendicular to the plane of the wall, the design tie rod force will be equal to the lateral reaction at the upper support (Figure 10.8). When the tie rods are inclined (Figure 10.8) the total tie rod force (T_A) is obtained from:

$$T_A = \frac{T_{\Delta H}}{\cos(\alpha)}$$ Equation 10.11

Where:

$T_{\Delta H}$ = upper simple support reaction

α = angle of tie rod inclination from horizontal

Tie rod inclination further induces axial force in the sheet piling given by:

$$T_{\Delta V} = T_{\Delta H} \tan(\alpha)$$ Equation 10.12

10.8.3.2. The axial component of inclined anchor force and any external axial loads are assumed to be resisted by a vertical reaction at the bottom of the pile.

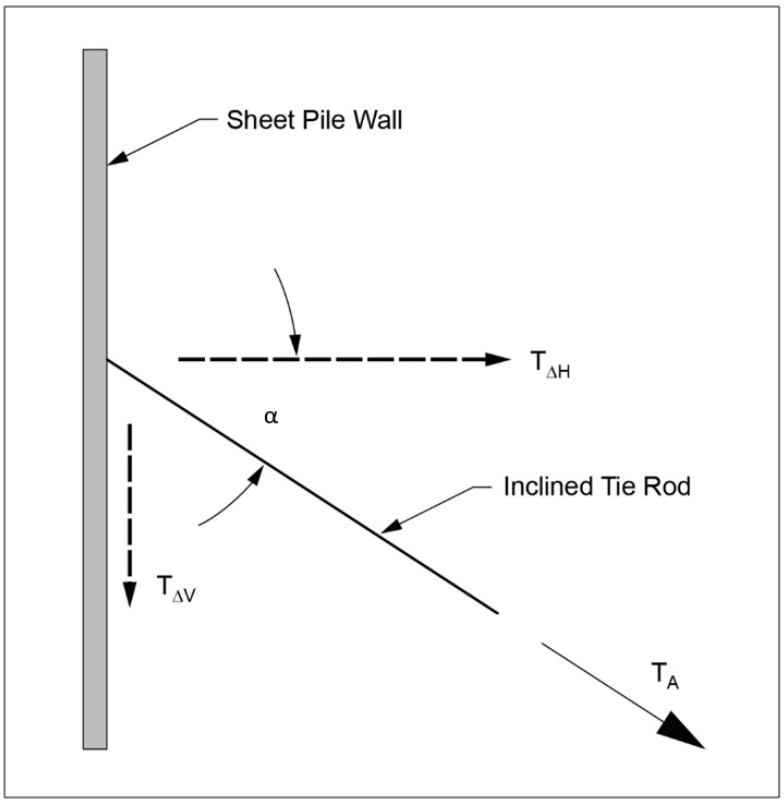

Figure 10.8. Anchor Force Components for Inclined Anchors

10.8.4. Anchor Component Design.

10.8.4.1. Typical wale and tie rod configurations are shown in Figure 10.9. All connections in these components should be bolted. Connections are designed according to the ANSI/AISC 360-16.

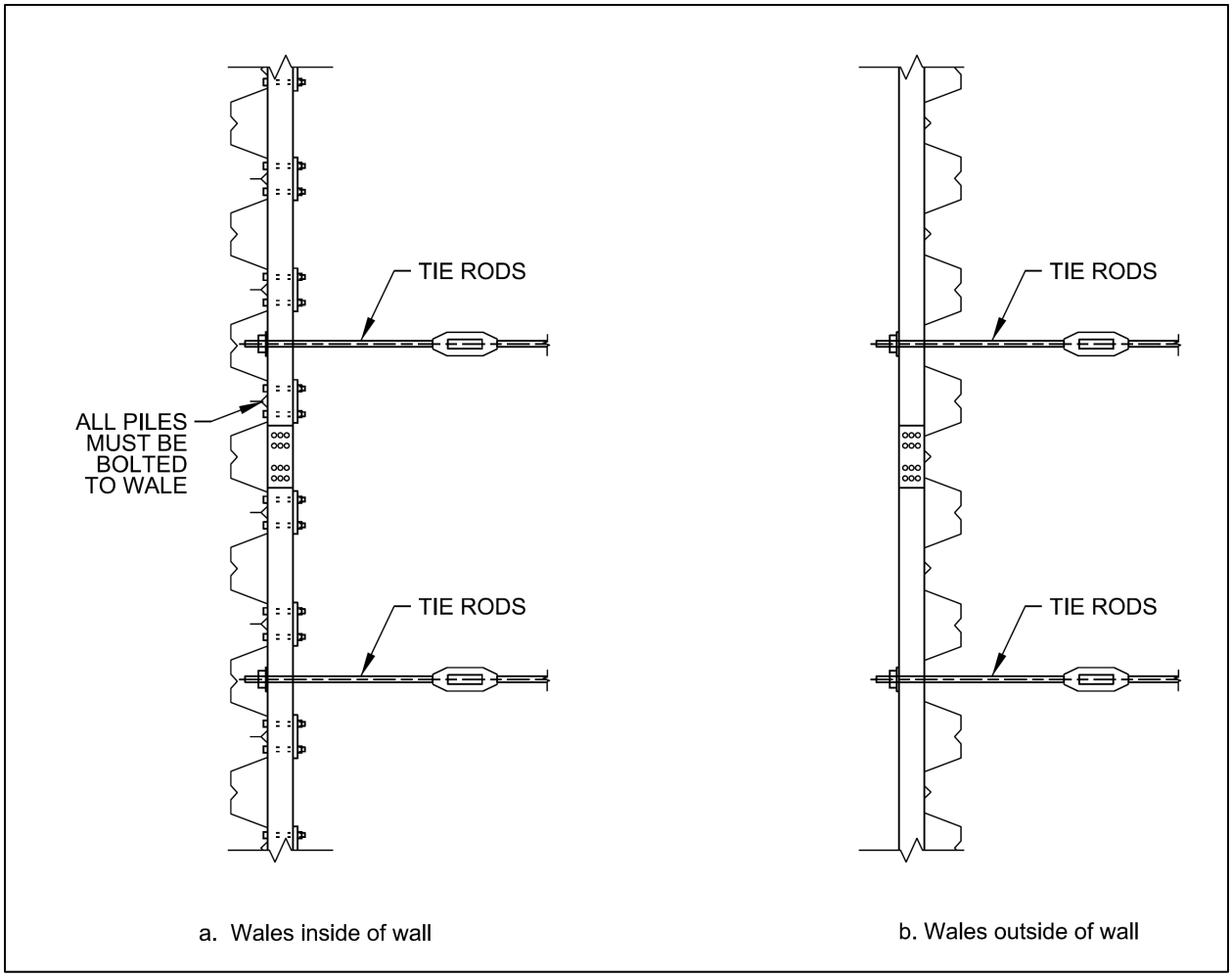

Figure 10.9. Typical Wale Configurations

10.8.4.2. Tie Rods for Passive Anchors. The force sustained by each tie rod is given by:

$$T_{rod} = T_a S \qquad \text{Equation 10.13}$$

Where:

T_a = anchor force per foot of wall from the stability analysis

S = spacing between adjacent tie rods

The minimum required net area for a tie rod is:

$$A_{net} = \frac{T_{rod}}{f_t} \qquad \text{Equation 10.14}$$

Where:

A_{net} = available net tension area of the threaded rod

f_t = allowable tensile stress for the rod material = 0.40 F_y (for all load categories)

10.8.4.3. Tie Rod Yield Strength. The tie rod yield strength is the product of A_{net} times F_y for steel rods and A_{net} times minimum yield strength for aluminum rods. The design capacity of the anchor wall or deadman should be sufficient to develop the tie rod yield strength.

10.8.5. Design of Wales.

10.8.5.1. Wales which transfer tie rod forces to the sheet piling are usually composed of back-to-back channels as illustrated in Figure 10.9. From a load transfer standpoint, the most desirable position of the wales is on the outside of the piling, Figure 10.9b. When the wales are placed on the inside face, Figure 10.9a, each individual sheet pile is bolted to the wale. The wale is assumed to act as a continuous flexural member over simple supports at the tie rod locations. The maximum bending moment in the wale may be approximated as:

$$M_{max} = \frac{T_{ah}\, S^2}{10} \qquad \text{Equation 10.15}$$

Where:

T_{ah} = anchor force per foot of wall

S = distance between adjacent tie rods

10.8.5.2. Sizing of the wale cross section, wale-to-piling connections, and tie rod-to-wale connections will be performed according to ANSI/AISC 360-16. The design should take into consideration factors including web crippling and possible torsion, biaxial bending, and shear produced by inclined tie rods.

10.8.5.3. A single load factor is applied to the force resultants using the Load and Resistance Factor Design of ANSI/AISC 360-16. The load factors are intended to provide designs similar to previous guidance while using up to date member capacity. The load factors are intended to account for the typical environment of hydraulic structures but do not account for section loss from corrosion. The load factors by load case are shown in Table 10.3.

Table 10.3
Minimum Load Factors for Design Steel Wales

Load Category	Load Factor
Usual	1.8
Unusual	1.4
Extreme	
Principal Load Condition 1 from section 6.3.5 and Earthquake	1.2
Principal Load Conditions 2 and 3 from section 6.3.5	1.3
Site Specific Earthquake	1.0

10.8.6. Corrosion Protection of Anchor Components.

10.8.6.1. Protecting the metallic components of the anchor against the effects of corrosion is necessary to assure adequate durability. The corrosion potential for hydraulic retaining walls is aggressive due to fluctuating water levels at the face of the wall and in the backfill. Appropriate corrosion protection must be provided. See section 12.6 for information on corrosion protection of sheet piling.

10.8.6.2. Corrosion protection for the anchor components includes sacrificial steel, coatings, galvanizing, and protective coverings or wraps. Bearing plates, nuts, and washers for exposed anchorages can be galvanized or coated with a durable UV-resistant coating. Protection of the anchor head can also be provided by with a corrosion-inhibiting compound-filled end cap.

10.8.6.3. Corrosion protection for tie rods can be provided using factory treatments, such as galvanizing and epoxy coatings. The bars can also be covered with a corrosion inhibiting compound that is encased by a PVC sheath. Couplers on tie rods are protected with the same level of protection as the joined rods. For applications in which stray currents are determined to be present, anchors can be electrically isolated from the ground environment.

10.9. Mandatory Requirements.

10.9.1. The passive factors of safety to be used for analysis and design of the rotational failure mode must exceed the minimum values in Table 10.1.

10.9.2. Factors of safety for Global stability must meet or exceed the minimum values in Table 10.2.

10.9.3. Passive soil pressures used for the calculation of loads in anchors and anchor walls must use developed shear strength parameters with minimum factors of safety from Table 10.1.

10.9.4. Factors of safety for Internal Erosion must meet or exceed the values in Table 7.3.

10.9.5. The wall section must provide the required minimum sectional properties over the service life of the wall, after allowance for possible loss of material due to corrosion, abrasion, or other detrimental effects.

10.9.6. Piling, anchor tie rods, wales, and other associated structural elements must meet the minimum requirements for strength of section 10.8.

10.9.7. Corrosion protection must be provided for anchor components according to section 10.8.6.

Chapter 11
Analysis and Design – Post-Tensioned Tieback Walls

11.1. Introduction.

11.1.1. A tieback wall system with single or multiple levels of post-tensioned (P-T) anchors can be used when the wall exceeds the height suitable for a cantilever pile wall. The anchors used for these wall systems are different from those described in Chapter 10 because the tieback anchors are defined as "active" anchors since they are post-tensioned. The anchors covered in Chapter 10 are considered passive anchors. Unlike passive anchors, the majority of the deformations associated with soil strength mobilization within the zone of anchorage are taken out by post-tensioning of the anchors.

11.1.2. Tieback walls with multiple levels of P-T anchorage are frequently used in a top-down earth excavation situation. This chapter describes analysis and design of flexible tieback anchor walls to meet the basic design requirements described in Chapter 4. Site information needed to perform the analysis is described in Chapter 5. The earth pressure loads applied in the analysis are described in this chapter. Other applicable loads are described in Chapter 6. Example calculations that demonstrate the guidance in this chapter are provided in Appendix H.

11.1.3. Tieback wall deformations are a function of soil strength, wall stiffness, variation in loads such as changes in water table and or surcharge loads, the sequence of construction, spacing of anchors, and degree of post-tensioning. Wall stiffness is a function of structural rigidity *(EI)* and the vertical spacing of anchors (L). Figure 11.1 shows a relationship between observed tieback wall lateral displacements (δ_h), wall stiffness (EI/L^4), and stability number ($\gamma H/s_u$) where γ = retained soil unit weight, H = wall height, and s_u = undrained shear strength of embedded portion of the wall.

11.1.4. Steel sheet pile and steel soldier beams with timber lagging systems are flexible tieback wall systems. Secant cylinder pile walls, continuous concrete slurry walls, and discrete concrete slurry walls are stiff tieback wall systems. In Table 1.2 on page 4 of Ebeling, et al. (2002), the general stiffness of the two different categories of P-T walls is used to distinguish them from each other. Often, in practice, trapezoidal (apparent) pressure distributions are used to evaluate flexible tieback wall systems, and triangular pressure distributions are used to evaluate stiff tieback wall systems. Chapter 2 in Strom and Ebeling (2001) provides figures and discussions of example wall systems for both stiff and flexible tieback walls.

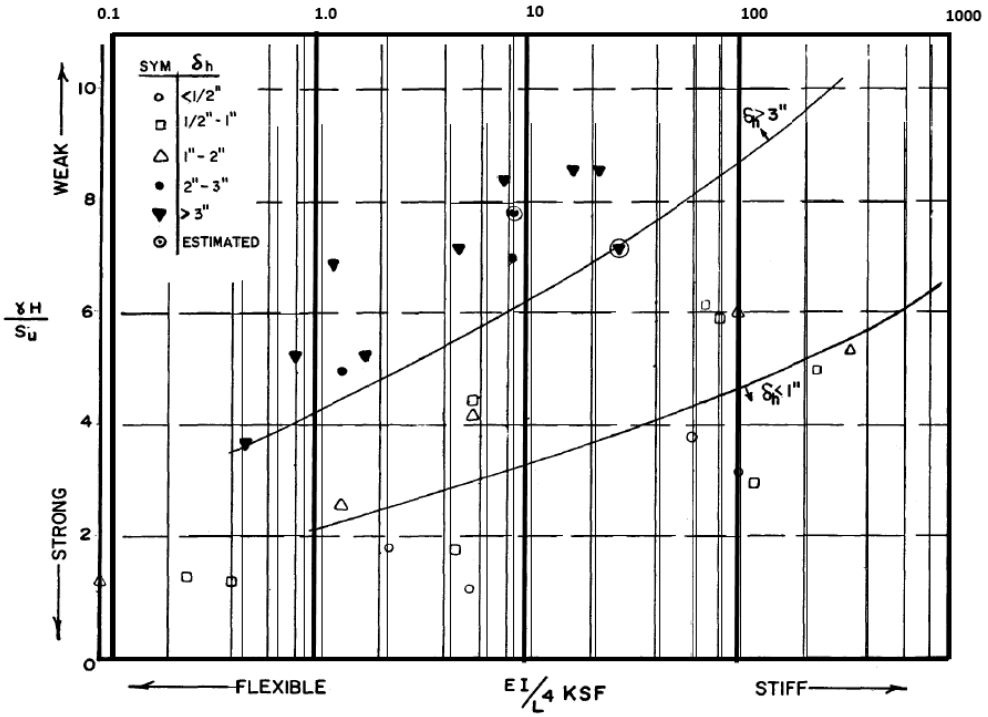

Figure 11.1. Effect of Wall Stiffness and Soil Strength on Lateral Wall Deflection, from Goldberg et al. (1976)

11.1.5. Displacement control can become an important issue for the retaining wall with multiple levels of P-T anchors, especially when existing structures are adjacent to the wall. Features that help mitigate excessive displacements, especially for flexible walls with P-T anchorage, are:

11.1.5.1. Usage of a stiff wall instead of a flexible wall.

11.1.5.2. Installation of the first row of P-T anchorage close to the ground surface.

11.1.5.3. Closer vertical elevation spacing of the P-T anchorage.

11.1.5.4. Minimization of over-excavation when installing each row of anchorage.

11.1.6. Tieback walls are used for both temporary excavation support and permanent wall systems. Tieback wall systems have advantages over other forms of temporary excavation support. Some of these advantages include unobstructed workspace in excavations, elimination of the need to provide temporary support since an anchored wall can be incorporated into the permanent structure, and reduced construction footprint.

11.1.7. Flexible wall systems are more commonly used for temporary walls. Although, for seepage issues, mitigation of soil particle migration and backfill erosion, and temporary systems that require strict displacement control, stiff walls may be used for temporary excavation sites. Generally, permanent tieback walls will have more stringent requirements for wall stability, P-T anchor testing, deformation control, corrosion protection, drainage, and permanent facing.

11.1.8. Differential Head.

11.1.8.1. USACE tieback walls constructed at waterfront sites are subjected to fluctuating water levels and fluctuating ground water levels in the retained soil. These fluctuating water levels introduce differential head across the face of the wall. Due to the differential hydraulic loading, there are concerns that need to be considered for soil particle migration of the retained soil, drainage of the retained soil, and seepage forces around the toe of the wall. Considering these factors may eliminate some or all of the flexible tieback systems.

11.1.8.2. For example, the gaps between lagging and soldier beam are not watertight and will not be reliable for controlling soil particle migration or seepage with a differential hydraulic load in the retained soil. Interlocks for steel sheet piling are not completely impervious. However, the opening is sufficiently small to control piping, and sheet pile has been used successfully for many waterfront structures.

11.1.9. The guidance provided herein is applicable to permanent, flexible tieback walls with continuous wall elements (such as sheet piling). The guidance is based on existing design procedures in FHWA-IF-99-015 (Sabatini et al., 1999) and FHWA-RD-97-130 (Weatherby, 1998). The design procedures for temporary and permanent flexible tieback walls using the FHWA methodology are also contained in USACE Publications by Strom and Ebeling (2001), Ebeling et al. (2002), and Strom and Ebeling (2002b).

11.1.10. Design procedures for temporary and permanent stiff tieback walls are provided in Strom and Ebeling (2001) and Strom and Ebeling (2002a). The software CMULTIANC may be used to facilitate the design of a top-down construction sequence analysis of a stiff wall system with multiple levels of P-T anchors.

11.2. Performance Modes.

11.2.1. General Probable Failure Modes. Analysis and design to address the general probable failure modes described in Chapter 3 are performed using performance modes, as described in Chapter 4. Each general failure mode described in Chapter 3 has a corresponding performance mode for analysis and design. Performance modes for flexible tieback walls include:

11.2.1.1. Failure due to Inadequate Sheet Pile Penetration (PFM AP-1);

11.2.1.2. Global Stability (PFM AP-2);

11.2.1.3. Anchor Stability (PFM AP-3);

11.2.1.4. Internal Erosion (PFM AP-4); and

11.2.1.5. Strength of Structural Elements (PFM AP-5).

11.2.2. Other Contributing Factors. Settlement, deflection, and liquefaction and cyclic softening are also evaluated as they may affect the other performance modes or serviceability.

11.2.3. Anchor Walls in Seismic Environments. Anchored walls sited in seismic environments should be carefully evaluated. The anchors and the embedded portion of the wall are critical to the stability of the wall. Loss of shear strength along the anchor or in the passive zone of the embedded wall may result in overall failure of the wall. As a general design principle, the embedded portions of the walls and the anchors should not be located in zones of liquefiable soils. Liquefaction and cyclic softening are covered in Chapter 17.

11.2.4. Anchor walls derive support from ground anchors that are installed above the excavation grade and from passive soil resistance that is provided by the embedded portion of the wall. Prior to installation of the first anchor, the wall will be analyzed like a non-gravity cantilever wall system, as prescribed in Chapter 9. Once the first and each subsequent anchor row is installed, a portion of the lateral restraint will be provided by the anchors. The remainder will be provided by the embedded portion of the wall element.

11.2.5. Generally, there are two performance objectives that are considered with tieback design: safety with economy design and stringent displacement control design. The safety with economy design considers the minimum criteria for a safe, yet affordable design. The stringent displacement control design can be performed when limiting vertical and horizontal displacements is critical to the design.

11.3. Apparent Earth Pressure Diagrams for Tieback Wall Design: Flexible Walls.

11.3.1. The deformation pattern for anchored wall systems constructed from the "top-down" is complex and not consistent with the development of a theoretical Rankine or Coulomb earth pressure distribution. Soil shear strength, wall stiffness, anchor inclination, vertical spacing of the anchors, and anchor lock-off loads directly influence the wall deformation pattern and the resulting earth pressures acting on these types of walls.

11.3.2. Design Procedures.

11.3.2.1. The design procedures used in FHWA-IF-99-015 and FHWA-RD-97-130 for flexible tieback walls use trapezoidal apparent pressure diagrams that are modifications of the apparent earth pressure diagrams developed by Terzaghi and Peck (1967). When used for the design of tieback wall systems at level ground sites with homogeneous soils and water tables below the base of the cut, they provide reasonable estimates of ground anchor loads. In addition, they provide conservative estimates of bending moments for flexible wall systems constructed in competent soils.

11.3.2.2. In addition, FHWA procedures allow the total load on the wall to be determined from limit equilibrium analysis which is used as a basis for developing the trapezoidal apparent earth pressure distribution. This total load approach permits the development of suitable apparent pressure diagrams for sites with sloping ground, layered soils, and water tables that are above the bottom of the cut.

11.3.3. Application of Apparent Earth Pressure Diagrams.

11.3.3.1. Apparent earth pressure diagrams are used for design of flexible walls. These diagrams are intended to represent a loading envelope that can be used to design ground anchor supports, vertical wall elements, and other tieback wall structural components. The diagrams are intended to include conditions reflecting the entire construction and in-service history. They do not represent earth pressures that might exist on the wall at any given time. Because of this, the tributary area method is used to calculate anchor forces and bending moments in the pile rather than performing a beam analysis using the pressure diagrams.

11.3.3.2. For the design of stiff tieback walls, the lateral earth pressures, anchor loads, and wall demands are calculated using different methods. Reference Strom and Ebeling (2001) and Strom and Ebeling (2002a) for procedures used in analyzing stiff tieback walls. CASE PC software, CMULTIANC, is also available for design of stiff walls with multiple rows of P-T anchors.

11.3.4. Apparent Earth Pressure Diagrams for Sands: Flexible Walls. Figure 11.2 shows the apparent earth pressure diagrams for walls that retain coarse-grained soils with one level of ground anchors and with multiple levels of ground anchors, as contained in FHWA-RD-97-130. Note that surcharge loading and unbalanced water loads, if present, must be added to these diagrams as described later in this section.

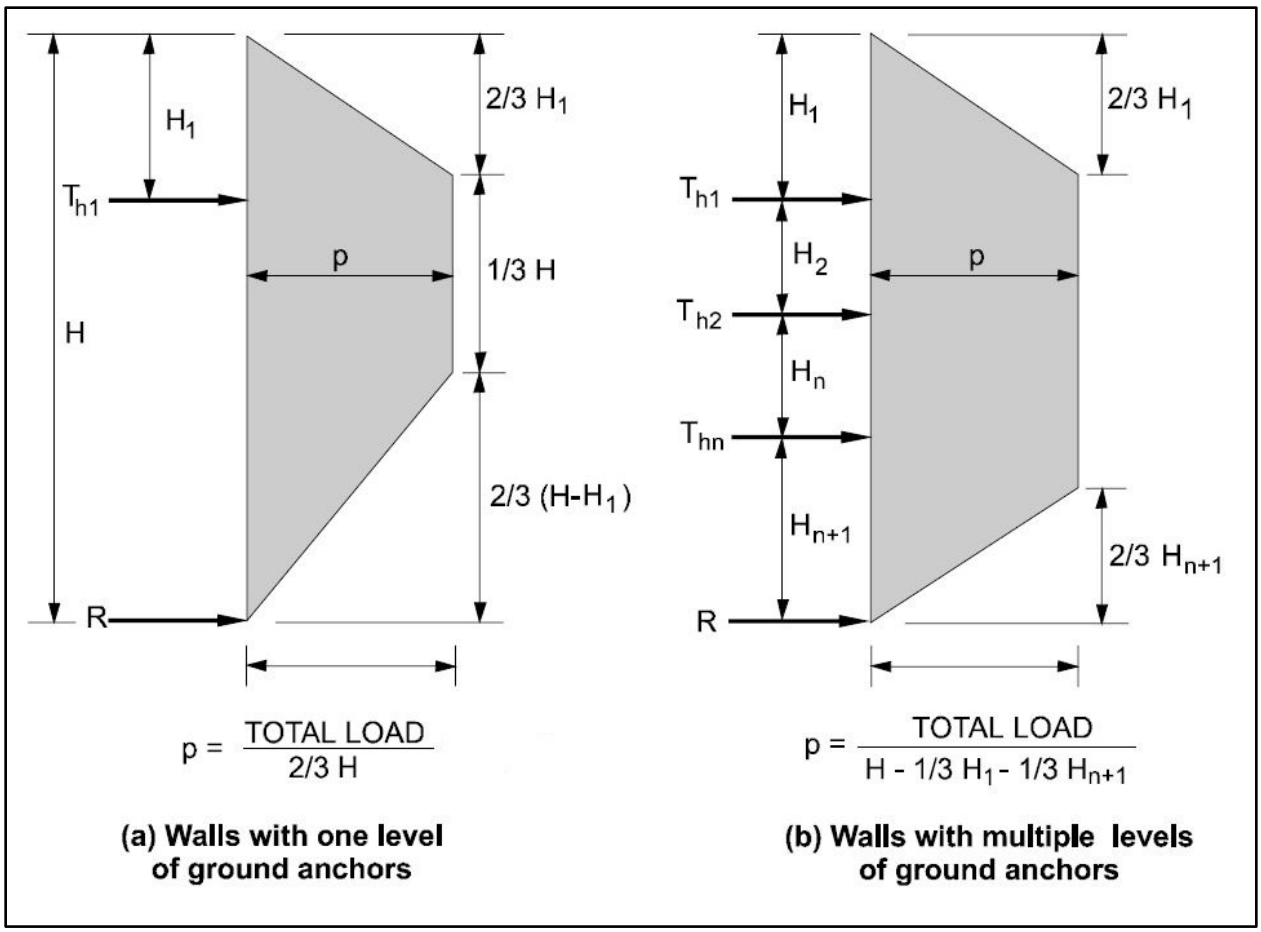

Figure 11.2. Recommended Apparent Earth Pressure Diagrams for Coarse-Grained Soils: Flexible Walls, Adapted from Sabatini et al. (1999)

In Figure 11.2:

H_1 = distance from the retained ground surface to uppermost ground anchor

H_{n+1} = distance from base of excavation to lowermost ground anchor

T_{hi} = horizontal load in ground anchor i

R = reaction force to be resisted by subgrade below the base of excavation

p = maximum ordinate of diagram

TOTAL LOAD = $(1/2)K_A\gamma H^2$, where K_A is calculated using mobilized shear strength. A factor of safety 1.3 is applied to the shear strength used to define K_A for safety with economy design. A factor of safety of 1.5 is required for stringent displacement control design. Alternatively, the TOTAL LOAD can be determined from limit equilibrium procedures (see section 11.3.7).

11.3.5. Apparent Earth Pressure Diagrams for Stiff to Hard Clays: Flexible Walls. Permanent ground anchor walls in cohesive soils should be checked for long-term conditions with drained shear strengths and effective stresses as well as using undrained shear strengths for short-term loading. The larger of the resultant forces from the two conditions (drained and undrained) should be used for design.

11.3.5.1. The recommended apparent earth pressure diagram for stiff to hard fissured clays is shown in Figure 11.3 and is based on the wall system having a stability number, $N_s \leq 4.0$. Apparent earth pressure diagrams for soft to medium stiff clays ($N_s > 4.0$) are not provided herein since the use of tieback walls in soft conditions are typically limited to temporary applications. The stability number, N_s, which is defined as:

$$N_s = \frac{\gamma H}{s_u} \qquad \text{(Equation 11.1)}$$

Where:

γ = total unit weight of soil above the excavation

H = height of excavation

s_u = undrained shear strength of soil below excavation

11.3.5.2. Short-Term (Undrained) Loading.

11.3.5.2.1. The apparent earth pressure diagram for stiff to hard clays under temporary loading should only be used when the temporary condition is of a controlled short duration and there is no available free water. If these conditions are not met, then the apparent earth pressure diagram for long-term conditions using drained strength parameters should be evaluated.

11.3.5.2.2. FHWA-IF-99-015 presents several empirical apparent earth pressure envelopes for stiff to hard clays and, in general, the range of the total load is similar for each of the envelopes. However, the most important observation is that twice as much load must be resisted by systems that are designed using an envelope based on an upper-range value of the maximum pressure ordinate as compared to systems designed using a lower range value of the maximum pressure ordinate. Therefore, it is recommended that the total load for stiff to hard clays be based on previous experience with excavations constructed in similar deposits.

11.3.5.2.3. Limit equilibrium analyses cannot be used to calculate the total lateral earth load for a wall built in stiff clay because loads on walls in a stiff clay deposit correspond to a quasi-elastic state instead of a state of limiting equilibrium under short-term (undrained) loading conditions. FHWA-IF-99-015 suggests that for temporary wall loadings (short-term), the total load will vary between $0.17\gamma H^2$ and $0.33\gamma H^2$ as presented in Figure 11.3.

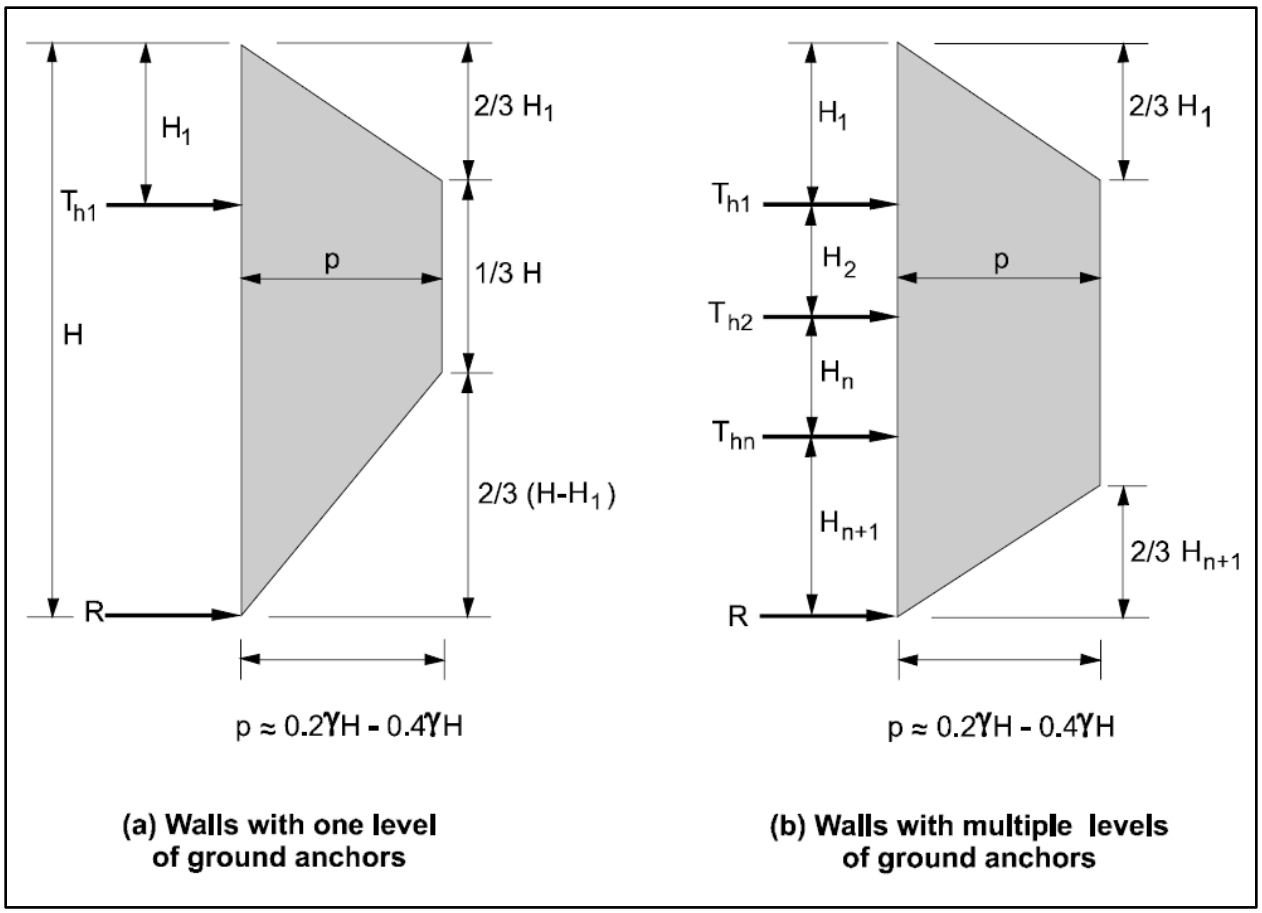

Figure 11.3. Recommended Apparent Earth Pressure Diagram for Stiff to Hard Clays: Flexible Walls, from Sabatini et al. (1999)

11.3.5.3. Long-Term (Drained) Loading.

11.3.5.3.1. Earth pressures associated with long-term drained conditions for excavations in stiff to hard fissured clays may be greater than those computed based on envelopes for short-term (undrained) conditions, as presented in section 11.3.5.2. Designs using drained shear strengths require the selection of the correct shear strength parameters and determination of the equilibrium pore water pressures within the ground behind the wall.

11.3.5.3.2. FHWA-IF-99-015 suggests using Figure 11.2 (apparent pressure diagram for sands) for long-term loading for stiff to hard clay soils, where K_A is calculated using the mobilized drained friction angle of the clay soil. The total load can also be determined using general limit equilibrium analysis. For most anchored wall applications, the drained friction angle should correspond to the fully softened friction angle.

11.3.6. Anchor Loads and Bending Moments.

11.3.6.1. Anchor loads, strut loads, wall bending moments, and soil reactions are most often determined by the tributary area method. This is shown for the apparent earth pressure diagram for flexible walls in Figure 11.4. The apparent earth pressure diagrams used in Figure 11.2 and Figure 11.3 should be used to determine the maximum ordinate of the loading diagram, *p*.

11.3.6.2. The calculated loads and moments are to be used when evaluating performance modes detailed in this chapter. Note that the equations provided in Figure 11.4 are valid for apparent earth pressure diagrams provided in Figure 11.2 and Figure 11.3. Modifications to these equations will be necessary for cases with irregular-shaped pressure diagrams such as those that include unbalanced water loads (see Figure 11.7) or surcharge loads.

11.3.7. Determination of Total Load Using Limit Equilibrium Procedures.

11.3.7.1. General. The determination of the ground anchor force required to support a cut using limit equilibrium procedures has several advantages in that it can accommodate changes in the wall geometry, strength properties, and complex groundwater conditions. The factor of safety is applied as a strength mobilization factor (SMF) to the soil shear strength (FS strength method). This is the preferred method for limit equilibrium analysis and consistent with the guidance in this manual.

11.3.7.2. Apparent Earth Pressure Diagrams. The total earth load (Total Load from Figure 11.2) determined by limit equilibrium methods can be converted to an apparent soil pressure diagram for use in the design of flexible tieback walls. By increasing the factor of safety, conditions approaching at-rest pressures can be simulated. This allows the engineer to develop apparent pressure diagrams for use in the design wall systems requiring stringent displacement control.

11.3.7.3. Total Load Determination Using Total Active Earth Pressure: Flexible Walls. This method can be used to determine the total load for layered stratigraphy. This method should not be used for soil profiles in which the critical potential failure surface extends below the base of the excavation or where surcharge loading is irregular. The procedure presented in FHWA-IF-99-015 is as follows:

11.3.7.3.1. Evaluate the mobilized active earth pressure acting over the excavation height and evaluate the total load imposed by these mobilized active earth pressures using conventional geotechnical engineering analysis methods. For calculating the mobilized active earth pressures, a SMF of 1.3 is applied for safety with economy designs and a SMF of 1.5 should be used for stringent displacement-controlled designs. For complicated stratification, irregular ground surface, or irregular surcharge loading, the lateral force may be evaluated using a trial wedge stability analysis.

11.3.7.3.2. Distribute the factored total force into an apparent pressure diagram using the trapezoidal distribution for flexible walls shown in Figure 11.2.

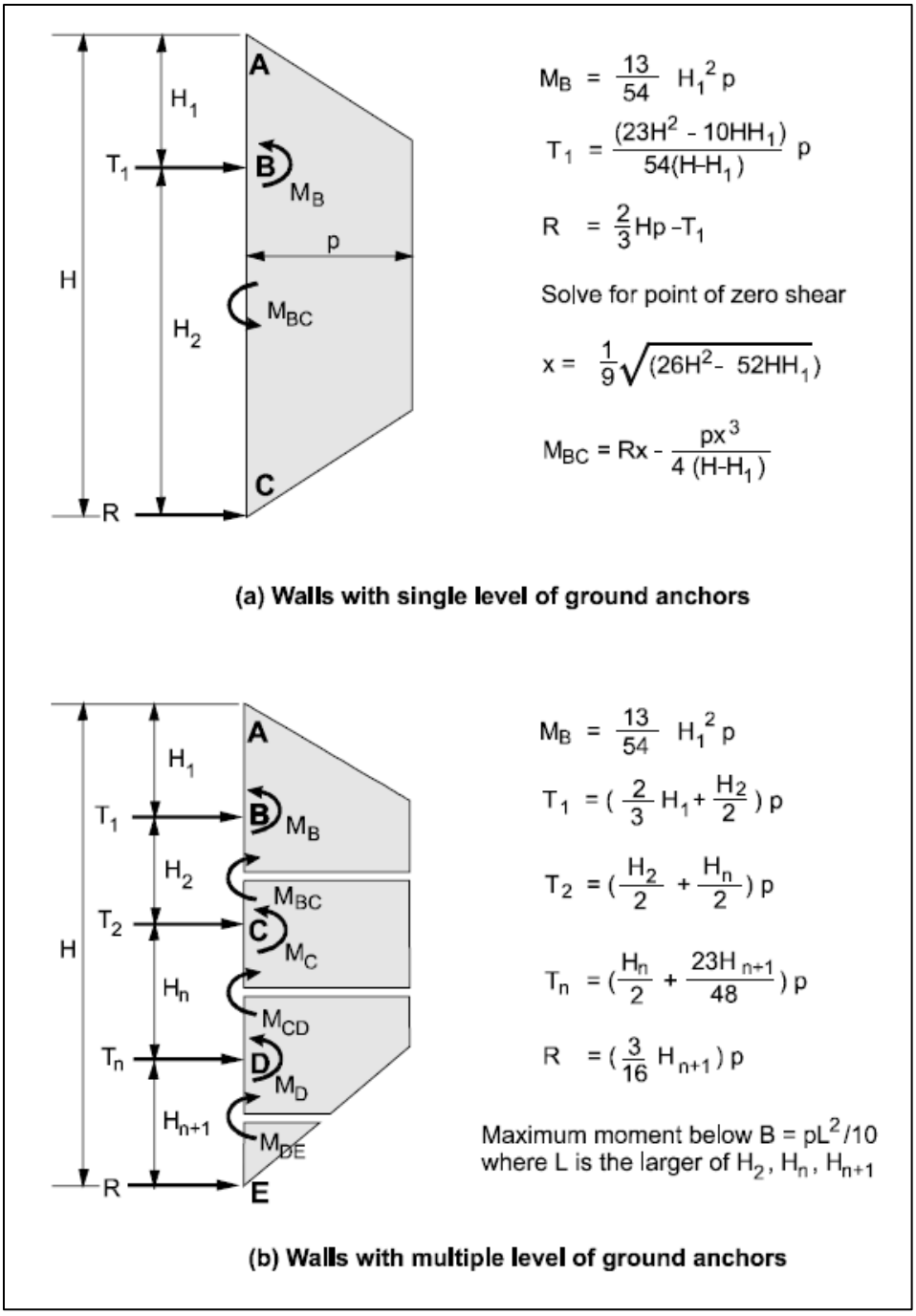

Figure 11.4. Anchor Loads and Wall Bending Moments Calculated Using Tributary Area Method: Flexible Walls, from Sabatini et al. (1999)

11.3.7.4. Total Load Determination Using General Slope Stability Software. FHWA-IF-99-015 provides two methods for determining the total load required to stabilize a cut using general slope stability software. The following method is most applicable to cases when the critical failure surface is within approximately 20 percent of the wall height below the excavation. It is not recommended when the critical failure surface extends deeper below the bottom of the excavation, such as applications with weak cohesive soils and landslide stabilization applications, where relatively large loads need to be resisted by the lower anchors. The procedure is as follows:

11.3.7.4.1. Develop cross-section geometry including subsurface stratigraphy, external surcharge loadings, and water pressures.

11.3.7.4.2. Assign shear strengths and unit weight to each soil and/or rock layer.

11.3.7.4.3. Select limit equilibrium method that satisfies both force and moment equilibrium and appropriate critical surface search parameters.

11.3.7.4.4. Apply surcharge or concentrated forces to the wall or slope face. For vertical walls, model the wall face with a slight batter to avoid anomalous numerical instabilities. Refer to Figure 11.5 for guidance on orientation of loads.

11.3.7.4.5. Evaluate critical surface and factor of safety for the load applied in Step 4.

11.3.7.4.6. Repeat Steps 4 and 5, increasing the surcharge or concentrated force until the target factor of safety is obtained for the flexible wall. A factor of 1.3 should be used for safety with economy designs. A factor of 1.5 should be used for stringent displacement-controlled designs.

11.3.8. Surcharge Loads. Lateral earth pressures resulting from surcharge loads should be added to the design apparent earth pressure diagram. Surcharge load calculations are provided in section 6.8. The mobilized active earth pressure coefficient (K_A) should be calculated using the same SMF that is used in developing the apparent earth pressure diagram.

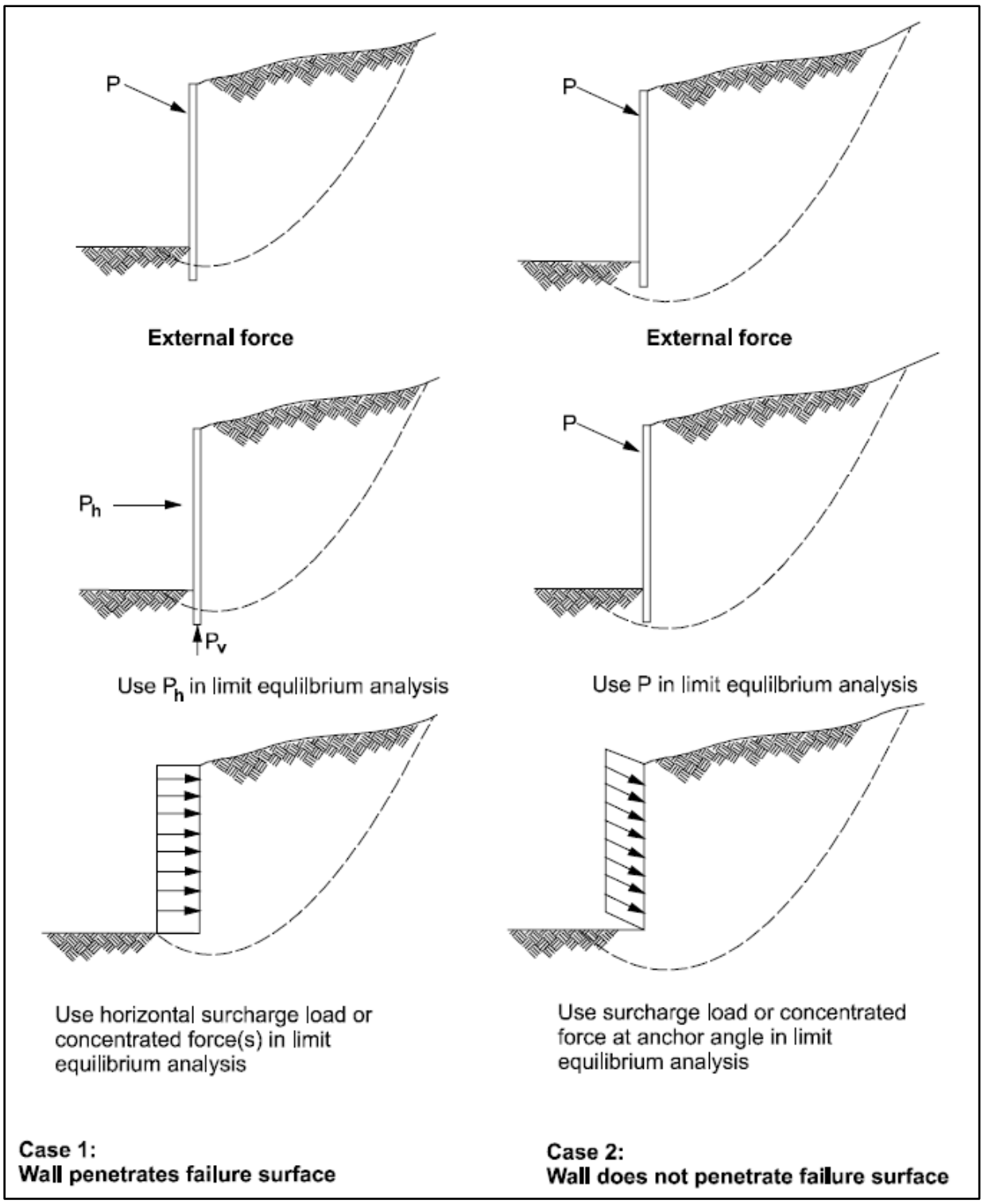

Figure 11.5. Modeling the Ground Anchor Force in Limit Equilibrium Analysis, from Sabatini et al. (1999)

11.3.9. Water Pressures. Load cases to be evaluated for permanent retaining walls at hydraulic structures can include the presence of a pool of water in the excavated region in front of the anchored wall. For those load cases, external water pressures should be considered in the analyses, whether they are performed in terms of total or effective stresses. Water loads are also considered in the retained soil for walls that are subjected to fluctuating water levels. Steady-state seepage forces should also be considered when calculating effective unit weights and lateral earth pressures.

11.3.9.1. Water in Retained Soil. There is no universal agreement in the engineering community as to how to account for a water table in the retained earth of a tieback wall system. Two procedures for combining earth and water pressures are the average effective unit weight approach and the total unit weight approach. Both should be considered in the design of tieback wall systems subjected to hydrostatic pressures.

11.3.9.2. Average Effective Unit Weight Approach. Sands and other free-draining soils are designed for both the short term and long term (post-construction/permanent) by the average effective unit weight approach (effective stress analysis) using effective weights and pore water pressures. Using effective unit weights and pore water pressures, the total load (lateral earth load only) for developing the earth pressure diagram can be determined as described in section 11.3.7.3 and the pore water pressures in the retained soil are added to the earth pressure diagram (see Figure 11.7). For long-term loadings, clay soils are generally evaluated using the average effective unit weight approach in the same manner as for free-draining soils, according to FHWA-RD-97-130.

11.3.9.3. Strom and Ebeling (2001) cites a simplified procedure that can be used to determine the average effective unit weight. For cases other than hydrostatic (steady-state seepage conditions), the resultant body force used in the effective lateral earth pressure computations may be obtained by combining buoyant unit weight and seepage force, as described in section 6.7.7. The procedure in Equation 11.2 considers a weighted average of the effective unit weights based on the submerged and unsubmerged soil areas contained in the failure wedge for the level ground case. The trapezoidal apparent pressure diagram is developed based on the average effective unit weight from Equation 11.2. Water pressure is added to the pressure diagram to obtain the total pressure (or total load) to be used for design of the wall and anchorages, as shown in Figure 11.7.

$$\gamma_e = \left[\frac{A_1}{A_1+A_2}\right]\gamma_1 + \left[1 - \frac{A_1}{A_1+A_2}\right]\gamma_2 \qquad \text{(Equation 11.2)}$$

Where:

γ_e = average effective unit weight of soil

γ_1 = $\gamma_{saturated} - \gamma_{we}$ (refer to section 6.7.7 for definition of γ_{we})

γ_2 = moist unit weight of unsubmerged soil

A_1 = area of submerged soil in the failure wedge (see Figure 11.6)

A_2 = area of unsubmerged soil in the failure wedge (see Figure 11.6)

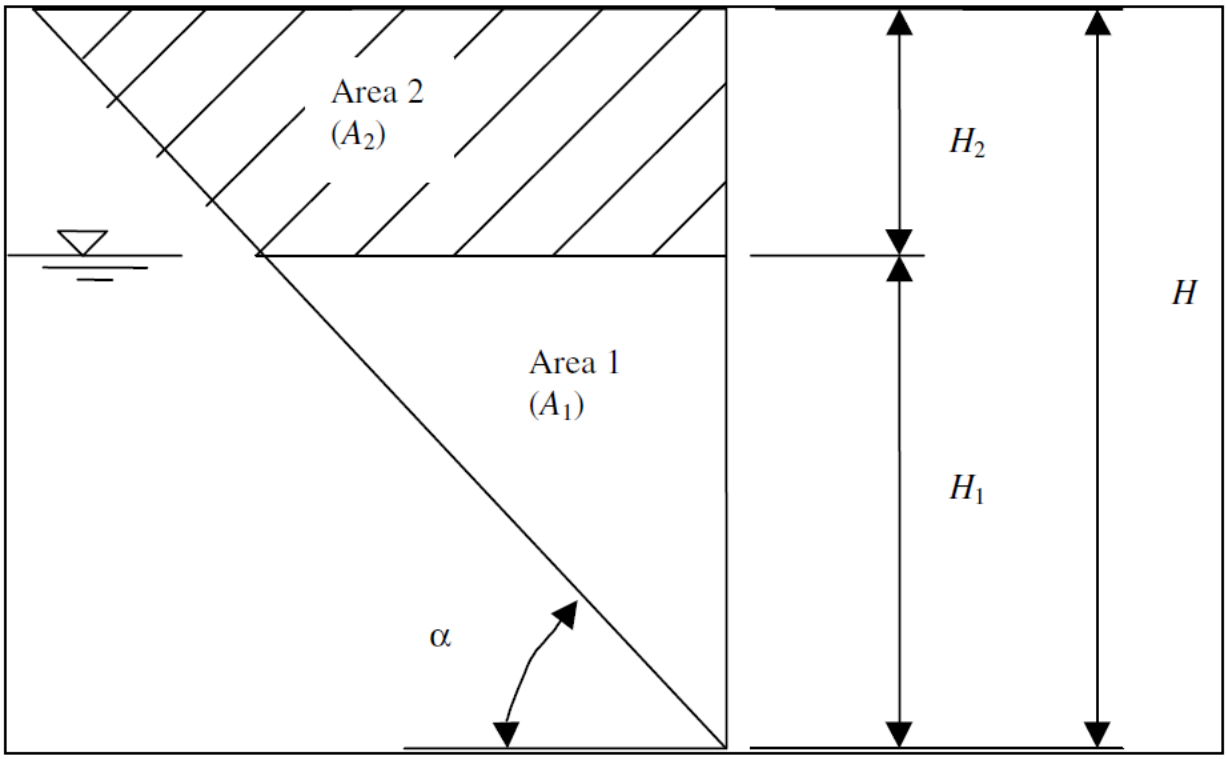

Figure 11.6. Effective Unit Weight for Partially Submerged Soils, from Strom and Ebeling (2001)

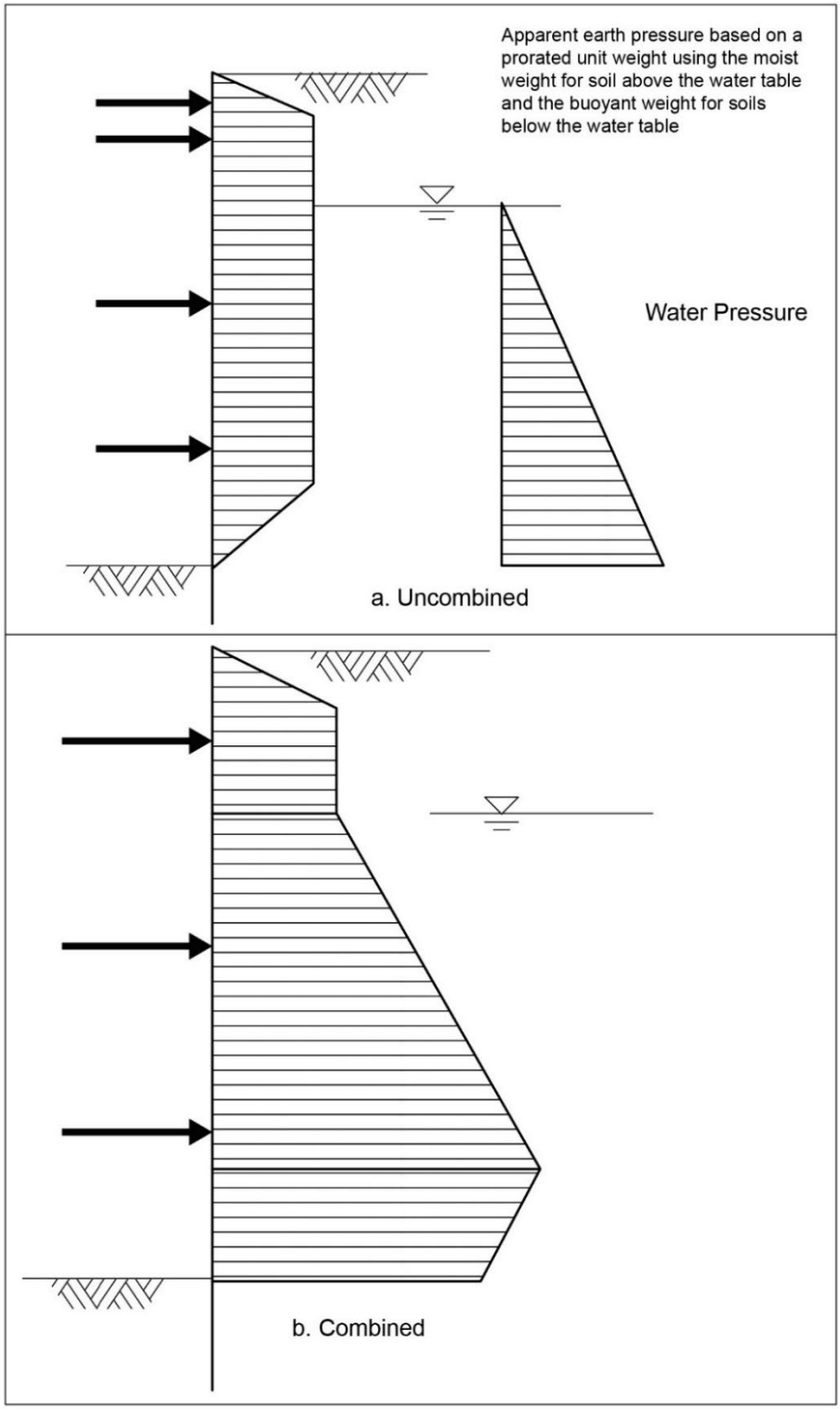

Figure 11.7. Apparent Earth Pressure Diagram Computed Using Effective Stress Soil Strength Parameters with Hydrostatic Water Table, from Strom and Ebeling (2001)

11.3.9.4. Total Unit Weight Approach. For short-term loadings, clay soils are evaluated based on a total unit weight approach (total stress analysis) using saturated soil weights for submerged soils and moist unit weights for soils above the water table. Internal pore pressures within the submerged soil mass are not considered explicitly in total stress analyses, but the effects of the pore pressures for the undrained condition are reflected in the soil's undrained shear strength.

11.4. Rotational Stability.

11.4.1. The embedded portion of the wall elements must have sufficient resistance to the loads placed on the wall by the retained material. Rotational stability refers to the ability of the soil to provide enough restraint against rotation or translation for the embedded portion of the wall. According to Weatherby (1998), the active pressures on the retained side are accounted for when determining toe embedment as shown in Figure 11.8.

11.4.2. The general form for calculating the embedment depth is given in Equation 11.3 and the net passive resistance is a function of the embedment depth, *D*. Water pressures and surcharge loads should be considered when calculating the net passive resistance. Negative values for the driving active force (P_A) that may be calculated for cohesive soils should be neglected.

$$P_P - P_A = R \cdot FS \qquad \text{(Equation 11.3)}$$

Where:

P_A = active earth force that acts below the bottom of the excavation on the retained side, calculated without SMF

P_P = passive earth force that acts below the bottom of excavation on excavated side, calculated without SMF

R = required soil reaction at the excavation line (typical equation shown in Figure 11.4)

FS = factor of safety

Note: Unbalanced water forces should be accounted for in this calculation.

11.4.3. The wall embedment depth for stiff tieback walls is also based on force equilibrium methods. However, since the methods used to calculate lateral loads on stiff tieback walls are different from the procedures presented herein, Equation 11.3 is not applicable to determining embedment of stiff wall elements. Reference Strom and Ebeling (2001) and Strom and Ebeling (2002a) for procedures used in analyzing stiff tieback walls.

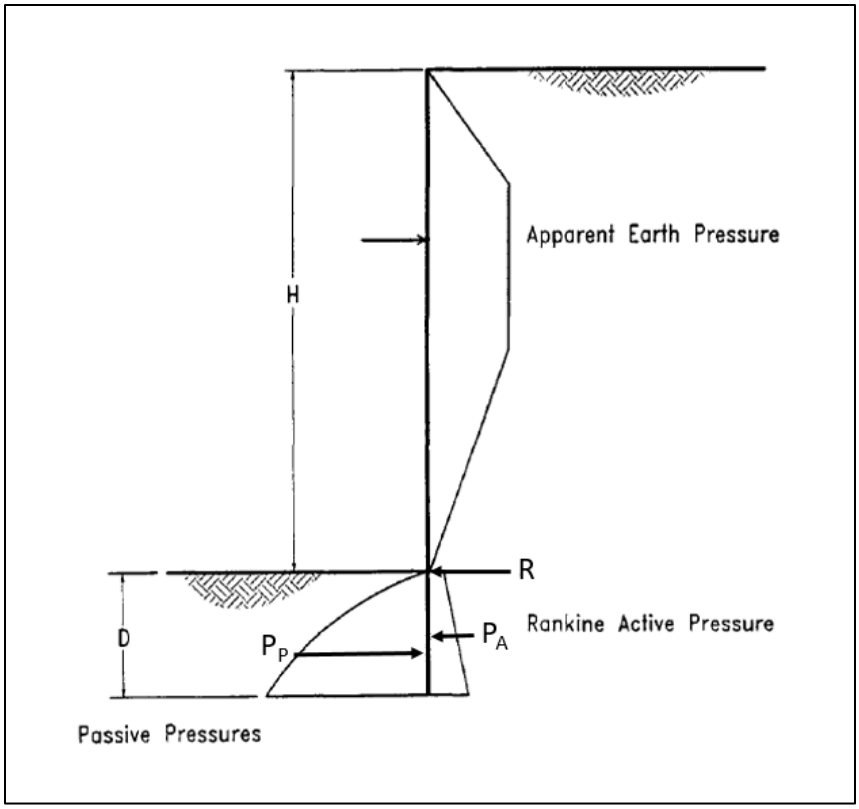

Figure 11.8. Active and Passive Pressures for Determining Wall Embedment: Flexible Walls, from Weatherby (1998)

11.4.4. Minimum Requirements. Provide a minimum embedment depth that satisfies Equation 11.3. Minimum recommended values of FS for the purposes of rotational stability of the vertical wall elements are given in Table 11.1.

Table 11.1
Minimum Factors of Safety Applied to Net Passive Resistance for Determining the Depth of Penetration

Load Category	Site Classification	
	Well Defined	Ordinary
Usual	1.5	1.7
Unusual	1.3	1.5
Extreme	1.1	1.3

11.5. Global Stability.

11.5.1. Global stability analysis needs to be assessed for relevant loading cases (see Chapter 6) using appropriate combinations of strength (Q, R, or S) and seepage conditions. Potential failure along circular, non-circular wedge, or general non-circular potential slip surfaces must be considered in the analyses. See section 7.6, EM 1110-2-1902, and EM 1110-2-1913 for further guidance on analysis methods and selection of soil strength and seepage conditions for various loading conditions. Factors of safety on critical slip surfaces that pass below the wall must exceed minimums in Table 11.2.

Table 11.2
Minimum Factors of Safety for Global Stability

	Site Classification		
Load Category	Well Defined	Ordinary	Limited
Usual	1.4	1.6	3.3
Unusual	1.3	1.5	3
Extreme	1.1*	1.4*	2.3
*For MDE (and MCE) earthquakes, seismic global stability and post-seismic performance are evaluated according to Chapter 17.			

11.5.2. To evaluate the stability of an anchored system, potential failure surfaces passing behind or through the anchor bond zones need to be checked. For walls with multiple levels of anchors, failure surfaces that pass behind each anchor bond zone should be checked. In checking a failure surface that passes behind a level of anchors, the failure surface may cross in front or through the anchor bond zone of other levels of anchors. In this case, the analysis is amended to include a portion of the restraint force from the other anchors.

11.5.3. If the failure surface passes in front of the anchor bond zone, the full design load for that anchor is modeled as a restraint force. If the failure surface crosses the anchor bond zone, a proportional magnitude of load may be assumed if the anchor bond stress is distributed uniformly over the anchor bond length. In most ground, this is a reasonable assumption.

11.5.4. In ground that becomes much weaker with depth, the ground anchor may develop most of its load-carrying capacity near the front of the anchor bond length. Under such circumstances, with respect to external stability, the anchor may act like a shorter anchor. In such cases, a more suitable bond stress distribution model (other than uniform) will be required. Where stability requirements cannot be met, the anchors may be lengthened or methods to improve anchor bond or load transfer mechanisms may be used.

11.6. Anchor Stability.

11.6.1. P-T anchorage consists of tendons installed in cased or uncased drilled holes with their remote ends grouted into competent soil or rock. Resistance is achieved through grout-to-ground interface along the anchor bond zone. The capacity of the anchors will depend on the method of drilling, including the quality of drill hole cleaning and period of time that the drill hole is left open, the diameter of the drill hole, the method and pressure used in grouting, and the length of the anchor bond zone. Except for certain minimum values, the selection of these items should be left to the discretion of the anchor contractor.

11.6.2. The main responsibility for the designer is to define a minimum anchor capacity that can be achieved in a particular ground type. Unless specific constraints prohibit such geometry, the estimation of anchor capacity should be based on the simplest commonly installed anchor, (the straight shaft gravity-grouted anchor), a 15-degree inclination from horizontal, and a bond length of 40 ft. (12 m) in soil or 25 ft. (7.5 m) in rock. Estimates made assuming that this anchor will be installed will produce a design capacity that may confidently be achieved. Meanwhile, specialty contractors can use more effective and/or economical anchoring methods to achieve the specific capacity if desired.

11.6.3. The design capacity of each anchor will be verified by testing before accepting the anchor. Table 11.3, Table 11.4, and Table 11.5 provide presumptive ultimate values that can be used for preliminary design. Anchor stability relies on the embedment length and the soil shear strength for capacity. Construction activities in the vicinity of existing anchors could impact the performance of the anchor and could result in failure. Such activities should be thoroughly evaluated prior to permitting them to occur around an anchor wall. This will verify that the activities will not adversely affect the wall or anchor performance.

Table 11.3
Presumptive Ultimate Values of Load Transfer for Preliminary Design of Small-Diameter Straight-Shaft Gravity-Grouted Ground Anchors in Soil (After Sabatini et al., 1999)

Soil Type	Relative Density/Consistency (SPT Range)[1]	Estimated Ultimate Transfer Load	
		kN/m	kips/ft
Sand and gravel	Loose (4–10)	145	10
	Medium dense (11–30)	220	15
	Dense (31–50)	290	20
Sand	Loose (4–10)	100	7
	Medium dense (11–30)	145	10
	Dense (31–50)	190	13
Sand and silt	Loose (4–10)	70	5
	Medium dense (11–30)	100	7
	Dense (31–50)	130	9
Silt-clay mixture with low plasticity or fines micaceous sand or silt mixtures	Stiff (10–20)	30	2
	Hard (21–40)	60	4

[1] N-values are corrected for overburden pressure.

Table 11.4
Presumptive Average Ultimate Bond Stress for Ground/Grout Along the Anchor Bond Zone (After Sabatini et al., 1999)

a. Rock		
Rock Type	Average Ultimate Bond Stress[1]	
	MPa	psi
Granite and basalt	1.7–3.1	250–450
Dolomitic limestone	1.4–2.1	200–300
Soft limestone	1.0–1.4	150–200
Slates and hard shales	0.8–1.4	120–200
Soft shales	0.2–0.8	30–120
Sandstones	0.8–1.7	120–250
Weathered sandstones	0.7–0.8	100–120
Chalk	0.2–1.1	30–160
Weathered marl	0.15–0.25	20–40
Concrete	1.4–2.8	200–400
[1] The Post-Tensioning Institute (PTI) recommends the ultimate bond stress between grout and rock be approximated as 10 percent of the unconfined compressive strength of the rock, up to a maximum bond strength of 600 psi.		
b. Cohesive Soil		
Anchor Type	Average Ultimate Bond Stress	
	MPa	psi
Gravity-grouted anchors (straight shaft)	0.03–0.07	4–10
Pressure-grouted anchors (straight shaft)		
• Soft silty clay	0.03–0.07	4–10
• Silty clay	0.03–0.07	4–10
• Stiff clay (med. to high plasticity)	0.03–0.10	4–15
• Very stiff clay (med. to high plasticity)	0.07–0.17	10–25
• Stiff clay (med. plasticity)	0.10–0.25	15–35
• Very stiff clay (med. plasticity)	0.10–0.35	15–50
• Very stiff sandy silt (med. plasticity)	0.28–0.38	40–55
c. Cohesionless Soil		
Anchor Type	Average Ultimate Bond Stress	
	MPa	psi
Gravity-grouted anchors (straight shaft)	0.07–0.14	10–20
Pressure-grouted anchors (straight shaft)		
• Fine-med. sand (med. dense-dense)	0.08–0.38	12–55
• Med.-coarse sand, w/gravel (med. dense)	0.11–0.66	16–96
• Med.-coarse sand, w/gravel (dense-very dense)	0.25–0.97	36–140
• Silty sands	0.17–0.41	25–60
• Dense glacial till	0.30–0.52	44–75
• Sandy gravel (med. dense-dense)	0.21–1.38	30–200
• Sandy gravel (dense-very dense)	0.28–1.38	40–200

Table 11.5
Presumptive Ultimate Values of Load Transfer for Preliminary Design of Ground Anchors in Rock (After Sabatini et al., 1999)

Rock Type	Estimated Ultimate Transfer Load	
	kN/m	kips/ft
Granite or basalt	730	50
Dolomitic limestone	580	40
Soft limestone	440	30
Sandstones	440	30
Slates and hard shales	360	25
Soft shales	150	10

11.6.4. For preliminary design purposes, the allowable anchor load can be calculated using Equation 11.4 or Equation 11.5, depending on the ground conditions. Minimum factors of safety for the anchor bonded length are provided in Table 11.6. Anchor bond lengths for gravity-grouted, pressure-grouted, and post-grouted soil anchors are typically 15 ft. (4.5 m) to 40 ft. (12 m). Significant increases in capacity for bond lengths greater than approximately 40 ft. (12 m) cannot be achieved unless specialized methods are used to transfer load from the top of the anchor bond zone toward the end of the anchor.

$$T_A = \frac{L_b \cdot LT_{ult}}{FS_b} \quad \text{(Equation 11.4)}$$

$$T_A = \frac{\pi \cdot d \cdot L_b \cdot BS_{ult}}{FS_b} \quad \text{(Equation 11.5)}$$

Where:

T_A = allowable anchor load

L_b = anchor bonded length

LT_{ult}=average ultimate transfer load (from Table 11.3 or Table 11.5)

d = drill hole diameter

BS_{ult}=ultimate bond stress (from Table 11.4)

FS_b = bond stress factor of safety (from Table 11.6)

Table 11.6
Minimum Factors of Safety for Determining Allowable Bond Stress for Grouted Anchors

Soil Type	Soil	Rock	Soil & Rock
Loading Case	Usual, Unusual, and Extreme	Usual, Unusual, and Extreme	Extreme Seismic
Bond Stress Factor of Safety	2.0	3.0	1.1[1]

[1] For seismic analysis, the full PGA must be used for failures determined to be brittle (such as rock, hard clays, and dense sands) and a minimum ground acceleration of 1/2 PGA must be used for ductile failures.

11.6.5. For anchor bond zones that function in tension, initial load increments transferred to the anchor bond zone are resisted by the soil near the top of the anchor bond zone as strains occur in the upper grout body (Figure 11.9). As additional increments of load are transferred to the anchor bond zone, the strains in the top of the anchor bond zone may exceed the peak strain. In that case, the bond stress begins to decrease at the top and the peak strain shifts down the anchor body.

11.6.6. In strain-sensitive soils, the shape of the stress-strain diagram will determine the actual bond length where significant load is mobilized. Attempts to mobilize larger portions of the bond length will result in small increases in capacity as residual load transfer values develop at the top and the peak value shifts toward the bottom.

11.6.7. When anchors are drilled in rock, water flow or fractures may allow for grout loss around the tendon bond length. Water pressure testing of the drill hole may be required when anchors are drilled into rock formations for hydraulic structures. Holes that fail a water pressure test are pre-grouted, redrilled, and retested to ensure that the bond length in the anchor drill hole is effectively sealed. Refer to Post-Tensioning Institute (2014) or more recent edition for water pressure testing procedures and criteria.

11.6.8. Anchor design loads will typically range from 60 to 260 kips (270 to 1,200 kN). Drill hole diameters are typically less than 12 in (30 cm). The anchors are typically installed at angles varying from 15 to 30 degrees from the horizontal. Generally, the total anchor length varies between 30 and 60 ft. (9 to 18 m). Sabatini et al. (1999) provide recommendations for the vertical and horizontal anchor spacing, as shown in Figure 11.10.

11.6.9. Unless stringent displacement control is a performance requirement, the vertical position of the uppermost ground anchor (the ground anchor closest to the ground surface) should be evaluated considering the allowable cantilever deformations of the wall. In general, permanent lateral wall displacements are less for walls when the first row of P-T anchors are placed closer to the ground surface. Additionally, the vertical position of the uppermost anchor should be selected to minimize the potential for exceeding the passive capacity of the retained soil during anchor proof and performance load testing.

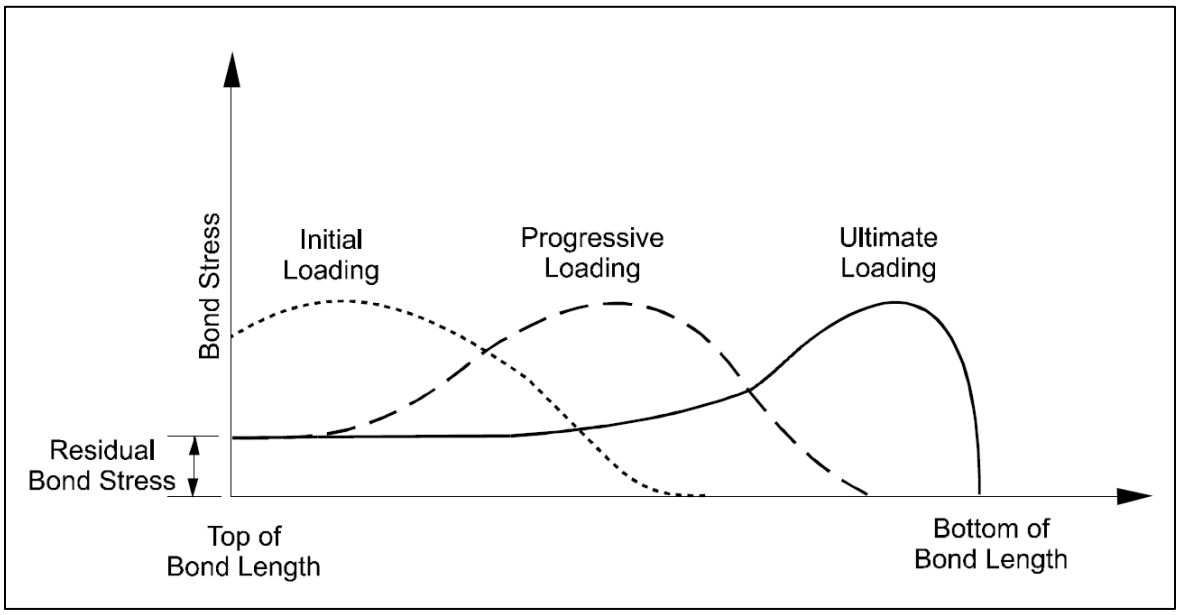

Figure 11.9. Mobilization of Bond Stress for a Tension Anchor, from Sabatini et al. (1999)

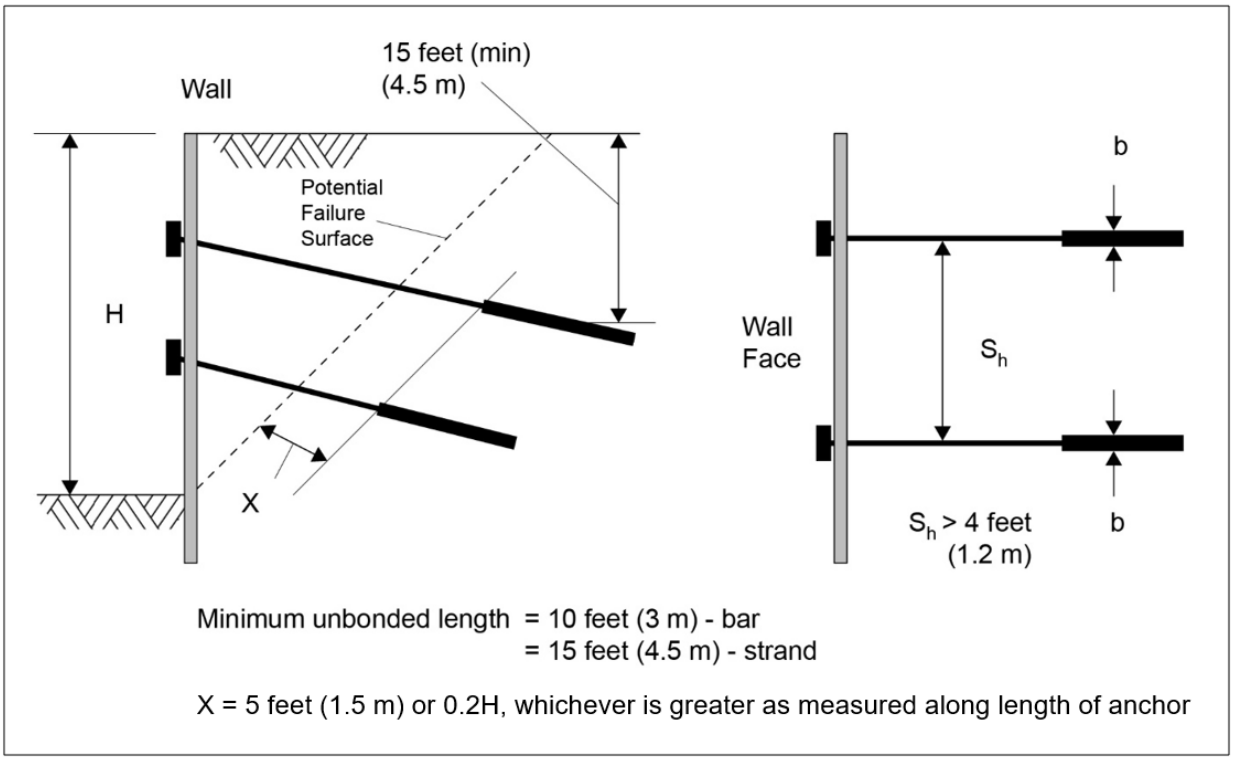

Figure 11.10. Vertical and Horizontal Spacing Requirements for Ground Anchors, from Strom and Ebeling (2001)

11.6.10. The bond between the grout and steel tendon must not be exceeded if the full strength of the supporting ground is to be mobilized. Mill test reports should be requested for each lot used to fabricate the tendons. Test reports should include the results of bond capacity tests performed according to the prestressing strand bond capacity test described in ASTM A981. ASTM A981 provides a standard test method to evaluate the bond strength between prestressing strand and cement grout.

11.6.11. Anchor Load Testing.

11.6.11.1. Ground anchors are unique compared to most other structural systems. Each ground anchor that is to be part of a completed structure is load tested to verify its load capacity and load deformation behavior before being put into service.

11.6.11.2. The acceptance or rejection of ground anchors is determined based on the results of (1) performance tests, (2) proof tests, and (3) extended creep tests. In addition, shorter duration creep tests (as opposed to extended creep tests) are performed as part of performance and proof tests.

11.6.11.3. Refer to Post-Tensioning Institute (2014) (PTI), or more recent publication, for the current standards regarding anchor load testing. Sabatini et al. (1999), provides additional background and details regarding the testing equipment, procedures, and interpretation. Strom and Ebeling (2002b) provide additional considerations for USACE projects.

11.6.12. Lock-Off Loads.

11.6.12.1. After load testing is complete and the anchor has been accepted, the load in the anchor will be reduced to a specified load termed the lock-off load. When the lock-off load is reached, the load is transferred from the jack to the anchorage. The anchor in turn transmits this load to the tieback wall. Information on relaxation losses should be obtained from tendon suppliers. To account for relaxation losses, the load transferred to the anchorage may be increased above the desired load based on the results of a lift-off test (refer to PTI, 2014 or more recent). After the losses, the transferred load will reduce to the desired long-term load.

11.6.12.2. The designer selects the lock-off load. It generally ranges between 75 and 100 percent of the anchor design load for conditions when the anchor design load is based on an apparent earth pressure envelope. Lock-off loads of 75 percent of the design load may be used for systems where relatively large lateral movements are permitted.

11.6.12.3. Since apparent earth pressure diagrams result in total loads greater than actual soil loads, lock-off loads at 100 percent of the design load may result in some net inward movement of the wall. However, when structures sensitive to settlement are founded adjacent to the excavation, stringent displacement control performance objectives are required. In these cases, a large lock-off load corresponding to approximately 100 percent of the design load should be used to limit lateral movement.

11.7. Axial Capacity of Wall Element. Vertical loads on the wall elements for tieback walls typically includes the vertical anchor forces, the dead weight of the wall elements, loads transferred to the retained ground or foundation above the excavation subgrade, and downdrag due to settlement of the retained ground. The anchor forces and dead weight can be more easily determined than the other two sources of external loads. Sabatini et al. (1999) recommend designing the wall elements to resist all external vertical loads by side friction and end bearing resistance. Procedures for computing side friction and end bearing resistance can be found in EM 1110-2-2906.

11.8. Internal Erosion.

11.8.1. The presence of a differential head of water acting upon a multi-anchor wall is an important aspect of design for USACE hydraulic structures, especially for permanent walls. Control against soil particle migration and accommodation of drainage features is an important part of wall design.

11.8.2. The internal erosion performance mode for tieback walls is similar to shallow-founded walls. However, it would be more common for head differential across the wall to be in the opposite direction, with flow from the higher retained soil toward the lower excavation side of the wall. Evaluation methods would be the same as described in section 7.7. Seepage with soil erosion through joints in the wall face used for the retaining wall is also of concern. This concern, especially for permanent walls in a hydraulic structure's wet environment, can lead the designer to the selection of slurry trench/tremie concrete retaining walls with multiple rows of P-T anchors.

11.9. Settlement and Deflection.

11.9.1. General. Settlement (vertical movement) and deflection (lateral movement and rotation under loading) are serviceability limit states. The movements can affect use and operability of the wall system. Settlement around anchors can increase tension forces in the tendons. Control of movements is likely to be important for walls with buildings and other public infrastructure close to the wall. If displacement control is a critical performance objective for the project being designed, the use of a stiff rather than flexible wall system should be considered, reference Strom and Ebeling (2002a).

11.9.2. Estimates of wall and ground movements are typically made using semi-empirical relationships developed from past performance data. Numerical modeling methods (presented in Chapter 16) can be used to evaluate the movement potential for the wall and adjacent structures. Clough and O'Rourke (1990) studied movements for several wall systems constructed from the top-down, including stiff and flexible tieback walls.

11.9.2.1. Clough and O'Rourke observed that maximum lateral wall movements for well-designed anchor walls constructed in sands and stiff clays average approximately 0.002*H* with a maximum of approximately 0.005*H* where *H* is the height of the wall. Maximum vertical settlements behind a well-constructed wall in these materials average approximately 0.0015*H* with a maximum of approximately 0.005*H*. Figure 11.11 can provide preliminary estimates of settlement behind anchor walls. Movements can be further evaluated using numerical modeling techniques that consider construction sequence, member stiffness, and PT anchor loads.

11.9.2.2. Although the post-tensioned anchors will reduce deflections compared to walls using passive anchors, some deflection will occur during installation. Deflections of flexible anchor walls can be reduced by using more rows of anchors at closer spacing, using stiffer piles, and by using stiffer wales (when present).

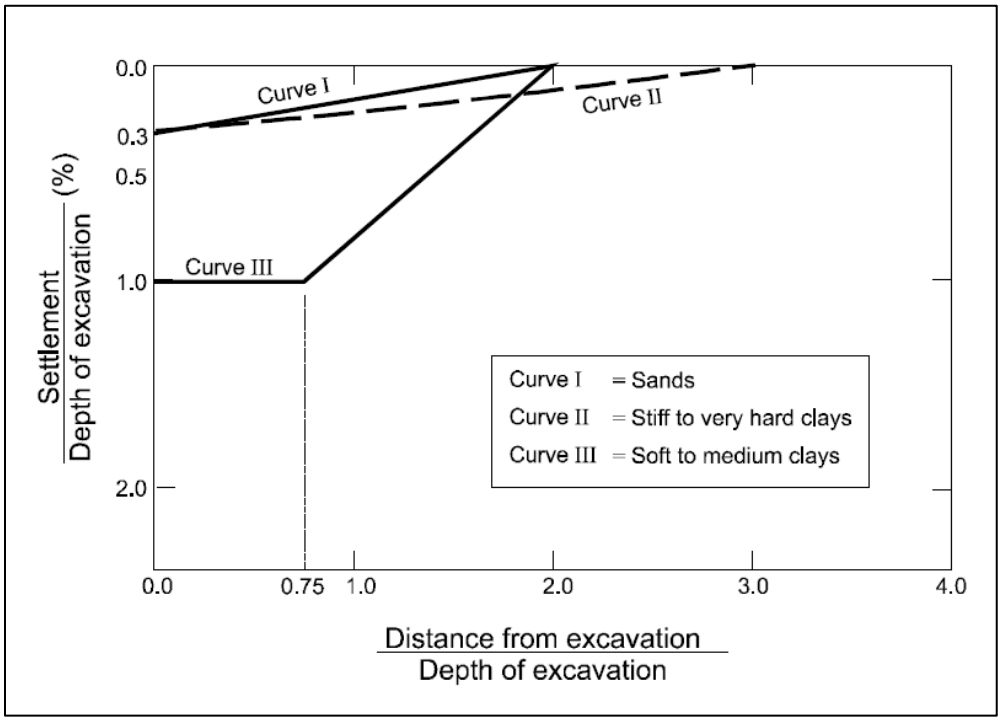

Figure 11.11. Settlement Profile Behind Braced and Anchored Walls, from Sabatini et al. (1999)

11.10. Strength of Structural Elements.

11.10.1. Structural Analysis. Calculation of forces in the structural elements is described in section 11.3.6. The forces in piles may also include axial loads from inclined anchors.

11.10.2. Design of Piles. Strength and serviceability of piles must be according to section 9.7.

11.10.3. Anchor Component Design.

11.10.3.1. A majority of failures of anchored walls occur in the tie rods, wales, and anchors. Typical wale and tie rod configurations are shown in Figure 10.9. Connections in these components should be bolted and designed according to ANSI/AISC 360-16 as described in section 10.8.5.

11.10.3.2. Anchor Tendons. Anchor tendons are designed using allowable stress method. The allowable stress is a ratio of the ultimate stress, f_{pu}. Allowable stresses are provided in Table 11.7

Table 11.7
Allowable Stresses for Anchorage Tendons

Load Type	Allowable Percent of f_{pu}
Usual	53%
Unusual	53%
Extreme	60%
Lock off	70%
Maximum Test Load	80%

11.11. Corrosion Protection of Anchor Components.

11.11.1. Permanent hydraulic retaining walls will likely be in aggressive environments due to exposure in the splash zone and fluctuating groundwater levels in the backfill and appropriate protection should be provided. General guidance for corrosion protection are outlined in this section; however, the Post-Tensioning Institute (2014), or more recent edition, should be referenced for specific requirements for corrosion protection for permanent anchors.

11.11.2. The corrosion protection measures for different anchor types and components are presented in Figure 11.12 through Figure 11.14. The details in Figure 11.14 are shown for a soldier pile system and can be adapted for a wale system with little change required. The wales must be spaced sufficiently for the equipment and for the angle of installation.

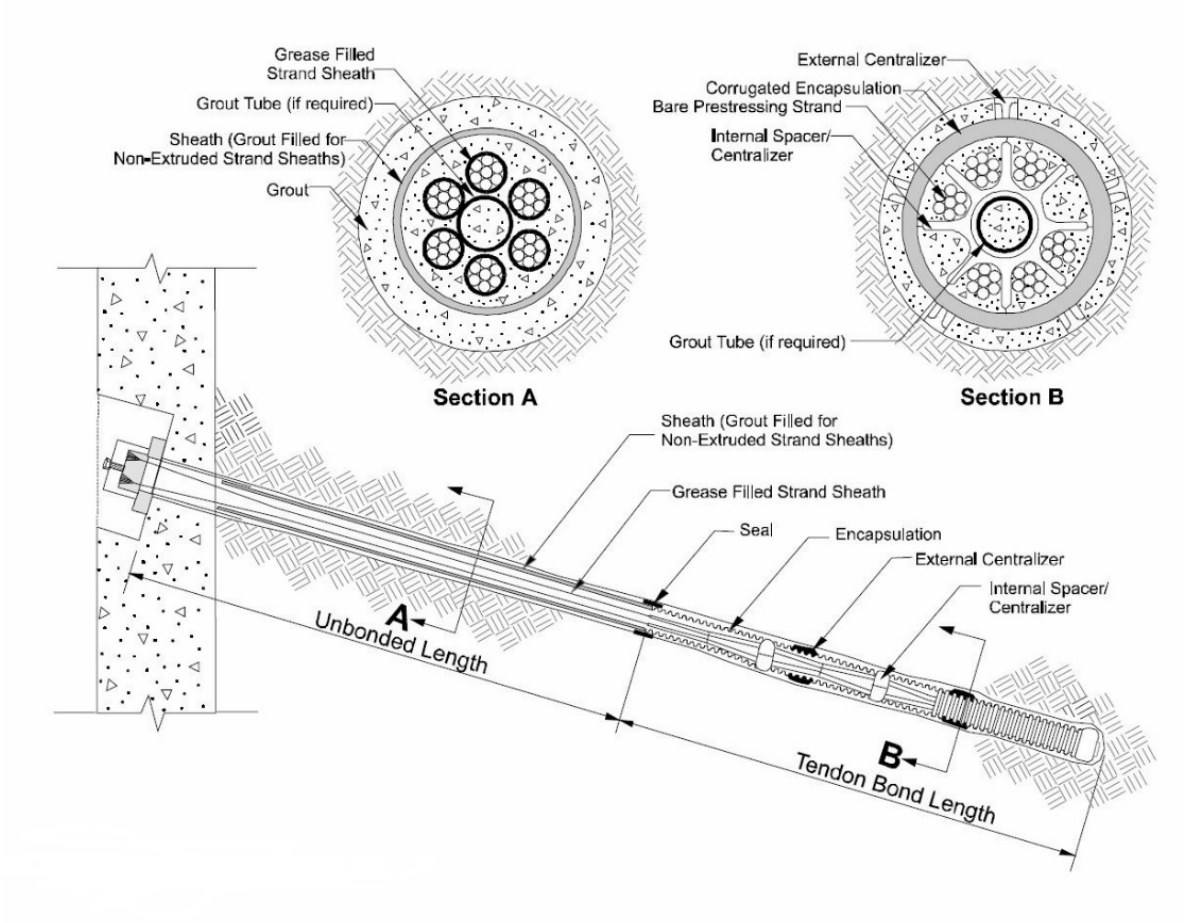

Figure 11.12. Corrosion Protection for Strand Anchor, from Sabatini et al. (1999)

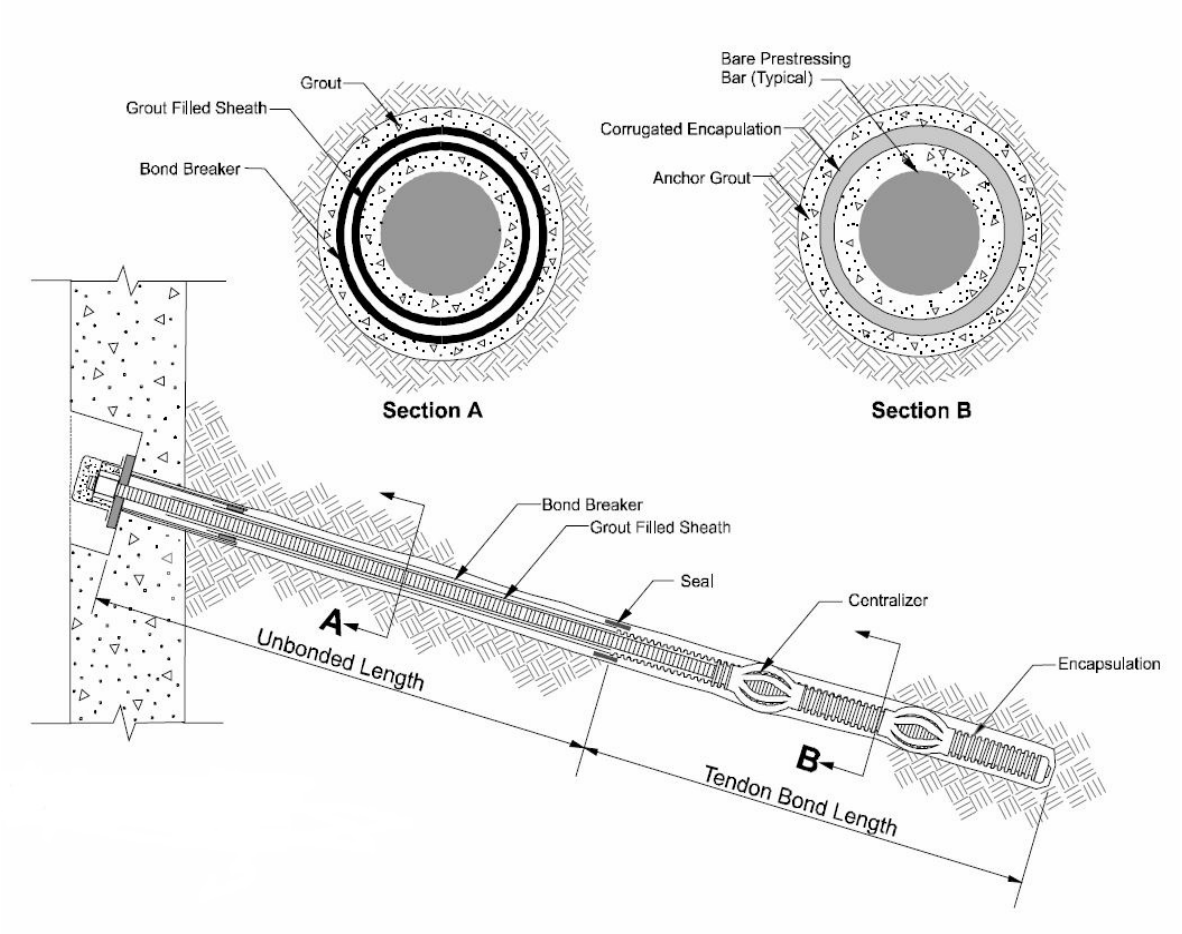

Figure 11.13. Corrosion Protection for Bar Anchor, from Sabatini et al. (1999)

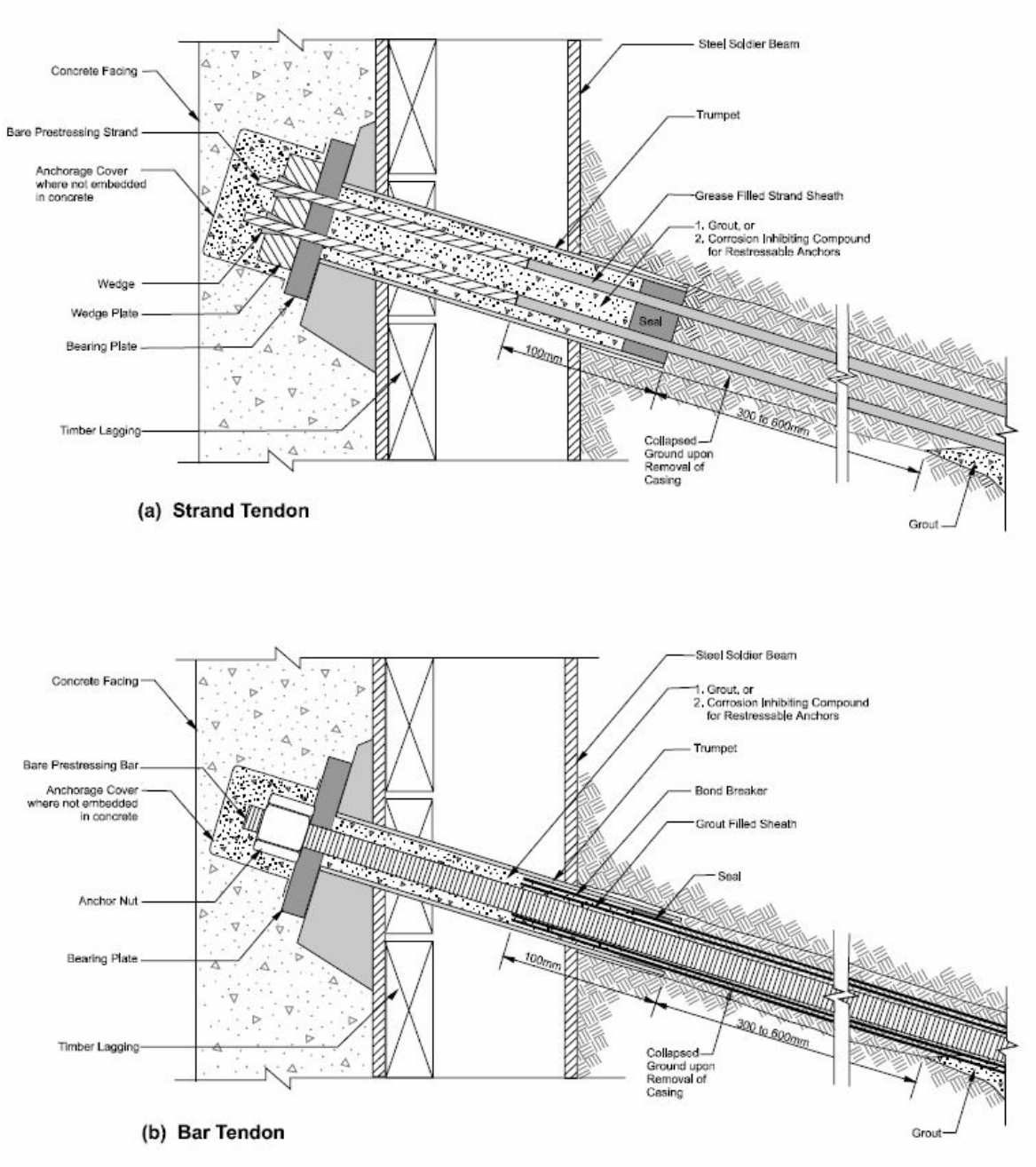

Figure 11.14. Corrosion Protection for Anchorage, from Sabatini et al. (1999)

11.11.3. The trumpet should be welded to the bearing plate to provide a watertight seal. The trumpet should be long enough for sufficient overlap with the unbonded length corrosion protection and should be completely filled with grout after anchor lock-off unless restressing is anticipated. For restressable anchors, the trumpet should be filled with a corrosion-inhibiting compound and a permanent seal should be provided at the bottom of the trumpet.

11.11.4. The bearing plates and steel covers for exposed anchorages must be galvanized or coated with a durable UV-resistant coating. Cast-in-place concrete facing that completely embeds the bearing plate will also provide required protection.

11.11.5. Protection of the anchor head and exposed bare prestressing steel may be provided by embedding the bare tendon in concrete—2 in. (5 cm) minimum—during installation of the wall facing or protected with a corrosion-inhibiting compound-filled or grout-fill cover. For non-restressable anchorages grout must be used, and for restressable anchorage, a corrosion-inhibiting compound must be used.

11.11.6. The permanently unbonded free stressing length must be protected by a corrosion-inhibiting compound or grout-filled sheath. The bonded portion of the free stressing length must be protected by a grout-filled encapsulation or by using epoxy-coated strand.

11.11.7. Tendon Bond Length. The tendon bond length must be protected from corrosion. Couplers on bar tendons must be protected with the same level of protection as the joined tendon lengths, including the grout cover requirements.

11.11.7.1. The most common form of corrosion protection is provided by a grout-filled encapsulation. Grout-filled encapsulations provide a layer of corrosion protection in addition to the grout over the tendon bond length.

11.11.7.2. Corrosion protection for rock anchors can also be provided with an epoxy coating on strand tendons installed in a successfully water-pressure-tested drill hole (refer to section 11.6.7). An epoxy-coated strand provides a layer of corrosion protection in addition to the grout when installed in drill holes that have successfully passed the water pressure test.

11.11.8. For ground anchor applications in which stray currents are determined to be present, tendons should be electrically isolated from the ground environment. The effectiveness of the sheath to provide electrical isolation must be verified in the field by testing after installation of the tendon and prior to grouting.

11.12. Short-Term Monitoring of Post-Tensioned Tieback Walls.

11.12.1. Short-term monitoring of anchored walls should occur during construction and shortly thereafter to verify that the wall movements are within a tolerable range. These inspections typically include visual inspections and optical surveys of the top of wall. Large wall movements may indicate potential instabilities.

11.12.2. Where unusual or adverse wall movements are identified, the short-term monitoring should be expanded to include regular measurement of anchor loads and monitoring of subsurface movements using settlement monitoring devices and inclinometers. The most common reason for excessive movements is over excavation below a row of unstressed anchors.

11.12.3. The wall designer should incorporate specific requirements into the contract documents for limiting excavation below anchor rows prior to post-tensioning and monitoring wall performance during construction. Reference paragraph 15.3.6 for long-term monitoring considerations for tieback walls.

11.13. Mandatory Requirements.

11.13.1. Depth of penetration of wall elements must be determined by applying minimum factors of safety to the net passive resistance as presented in Table 10.1.

11.13.2. Minimum global stability factors of safety must meet the requirements of Table 11.2. Potential failures along circular, non-circular wedge, and general non-circular slip surfaces must be considered in the analysis.

11.13.3. Factors of safety for internal erosion must exceed the minimums in section 7.7, Table 7.3.

11.13.4. Allowable anchor capacity for PT tiebacks must be calculated by applying minimum factors of safety to bond resistance, as presented in Table 11.6.

11.13.5. Anchor load testing and acceptance of completed anchors must be performed according to section 11.6.11.

11.13.6. Piling, anchor tendons, wales, and other associated structural elements must meet the minimum requirements for strength in section 11.10.

11.13.7. Corrosion protection must be provided according to section 11.11 for anchor components that are composed of metal.

Chapter 12
Miscellaneous Engineering Design Topics

12.1. Introduction. This chapter provides information for the general design of all wall systems covered in this manual. This chapter contains miscellaneous failure mode design topics (floodwall to levee transitions and erosion and scour protection), structural design details, geotechnical design details, utility crossings, architectural treatments, vegetation, and instrumentation. Note: guidance stated to be for floodwalls in this chapter also applies to dam walls, dam crest walls, or other walls that retain water.

12.2. Transition Sections Between Walls and Embankments.

12.2.1. General. A junction between an earthen levee or dam embankment and a wall is a location with distinct potential failure modes. Depending on the situation, failure modes to be addressed in the design of the transition are:

12.2.1.1. Wave Attack Erosion (PFM WT-1).

12.2.1.2. Wave Overtopping Erosion (PFM WT-2).

12.2.1.3. Internal Erosion Around Tie-ins (PFM WT-3).

12.2.1.4. Concentrated Leak Erosion (PFM WT-4).

12.2.2. The failure modes are described in Chapter 3. This section provides guidance for the design of transitions to address these failure modes.

12.2.3. Sheet Pile Tie-In.

12.2.3.1. At transitions between levees and floodwalls, sheet piling is commonly extended into the levee, as shown in Figure 12.1. The sheet pile tie-in maintains the height of flood barrier if settlement, erosion, or scour occurs and provides protection against the internal erosion that can occur around the structure. One foot of soil over the top of the piling at the transition allows for grass cover. It also reduces the exposure of piling as surrounding ground settles, making mowing easier.

12.2.3.2. The sheet pile should extend past the concrete cap into the levee a distance equal to or greater than the larger of the height of the levee, 10 ft. (3 m), or as required by evaluation of internal erosion. Design for internal erosion along the contact between the structure and soil is accomplished by lengthening the seepage path or by providing a filter at the exit to arrest soil particle migration. The sheet pile tie-in lengthens the path that soil particles would need to migrate along this contact for internal erosion to progress to breach.

12.2.4. I-Wall Tie-In.

12.2.4.1. General. Often a short transition concrete-capped sheet piling, I-wall is installed between the levee and a T-wall as shown in Figure 12.1. A typical detail is shown in Figure 12.2 for a connection from an I-wall to a T-wall. A photo of this under construction is shown in Figure 12.3. One of the primary concepts in the development of this transition is to arrange details so there will be a minimum amount of differential movement of joints of monoliths in the transition.

12.2.4.2. Sheet Pile Interlocks and Dovel Tail Slip Joint. Where differential movement is anticipated, the sheet pile interlock should fall within the dove tail slip joint. Where differential movement is not anticipated, the sheet pile interlock can be located outside the wall edge. A dove tail slip joint may also be provided to aid in constructability. In many cases, the levee embankment may be placed and compacted; then, the sheet pile transition is driven in order to minimize void spaces along the sheet pile corrugation if done in reverse.

12.2.4.3. Differential Settlement Between Wall and Levee. The levee end of the transition will usually settle a considerable amount, due primarily to foundation consolidation under the added weight of the levee. A pile-founded wall monolith immediately adjacent to the beginning of the levee adds far less superimposed weight on typically softer, upper soils in the foundation. Hence, there is much less settlement at this end of the transition. Differential settlement at the junction between a wall and embankment can damage scour protection, lead to preferential seepage paths along the junction, and contribute to other failure modes listed in section 12.2.2.

12.2.4.4. The I-wall tie-in can be satisfactorily adopted as a transition section between a levee and a pile-founded wall. That is because this type of construction is done after completion of the levee. A delay in inserting the I-wall tie-in allows for settling of the levee, thus lessening the differential settlement between the levee end of the transition and the wall. Potential ground improvement measures to mitigate for total and differential settlement are described in section 12.9. The constructed transition may need to be made higher than required to account for settlement over the life of the project.

12.2.4.5. Dowels may be used to manage vertical movement at joints if they are detailed to allow rotation and translation.

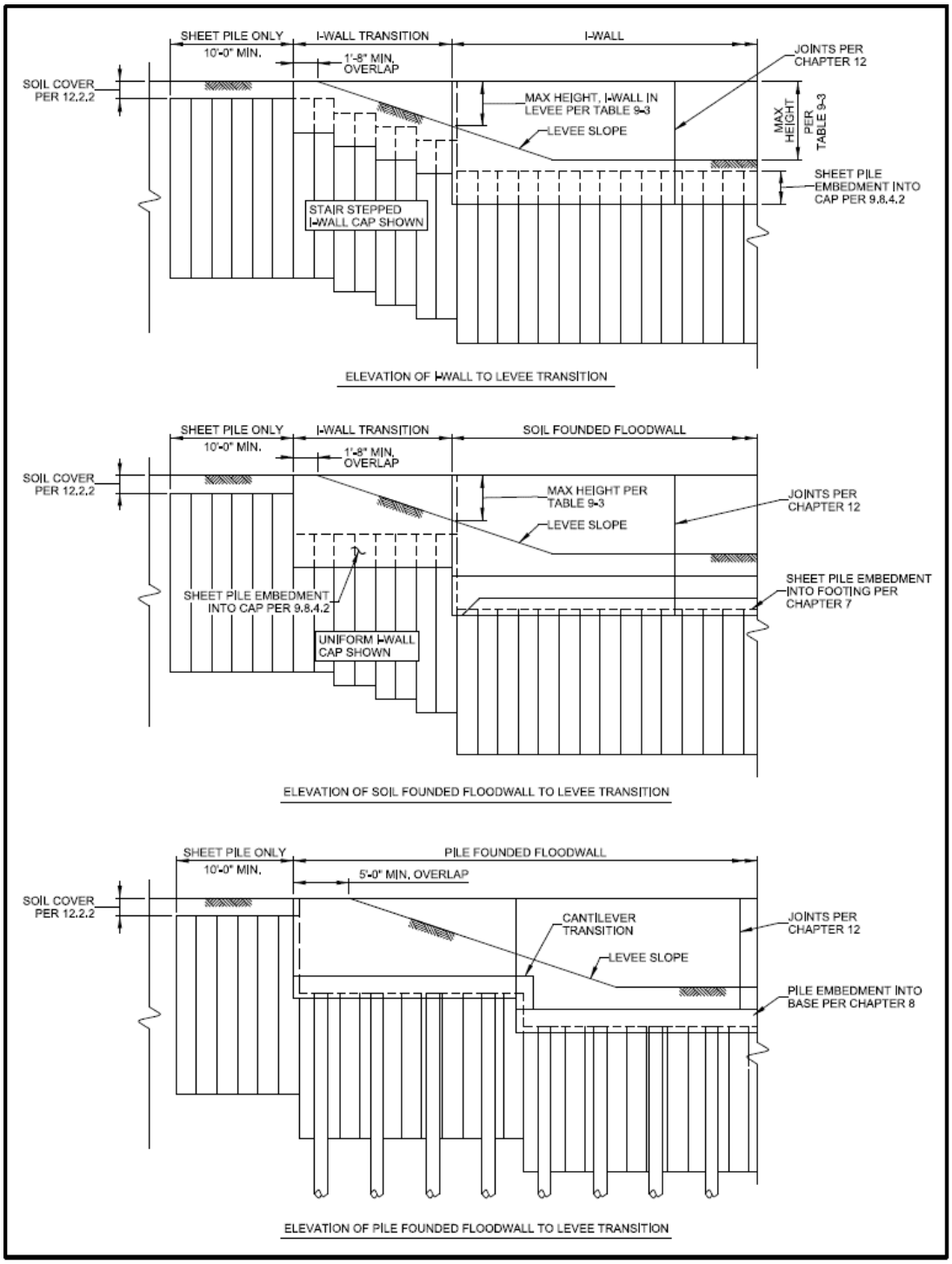

Figure 12.1. Floodwall to Levee Transitions
(See Appendix A for English to Metric Conversions)

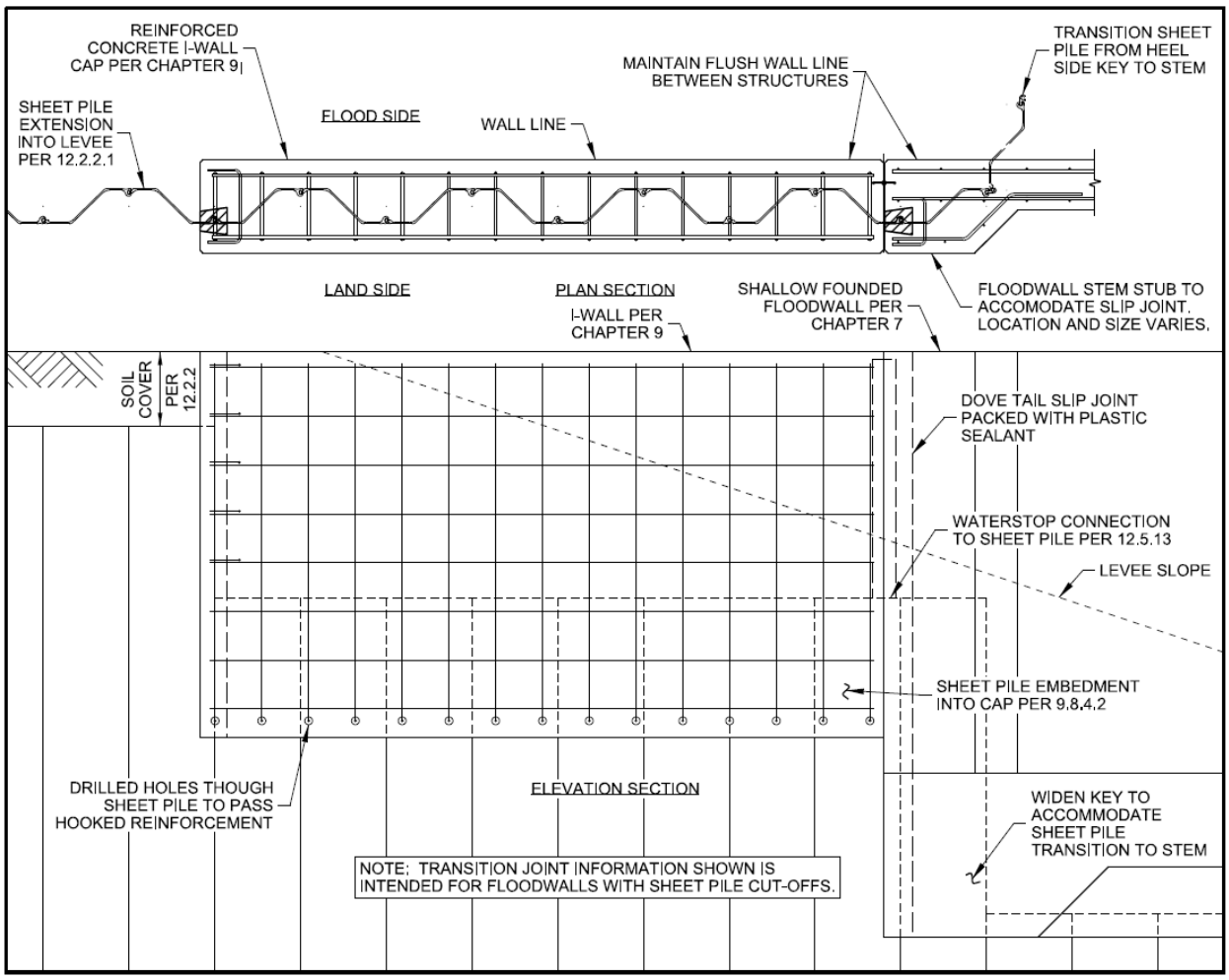

Figure 12.2. Typical Details of Joint Between Sheet Pile Extension, I-Wall, and T-Wall



Figure 12.3. T-Wall to I-Wall/Levee Transition Under Construction (New Orleans District)

12.2.5. Joints to Accommodate Settlement. Settlement of levees relative to adjacent floodwall sections may require special considerations to accommodate movement. This can be done with joints. The joint widths and waterstops should be selected to accommodate the expected rotation and movement. This may be done with large center bulbs or, in the case of very large movements, surface mounted neoprene sheets. Surface mounted waterstops should only be used as last resort. They need to be protected from sun and vandalism or damage with a durable cover that can also accommodate movement. Joints and waterstops are discussed in section 12.5.

12.2.6. Scour Protection at Transitions. Where the levee may be overtopped and particularly for coastal protection that may be overtopped by waves, scour at the transition due to concentration of flow adjacent to the floodwall and levee during overtopping is a concern as shown in Figure 12.4. Because of the vulnerability of the transition to overtopping failure modes, transitions should be made higher than adjacent levee and floodwalls so that they overtop last. Transition erosion protection is described in section 12.3.4.

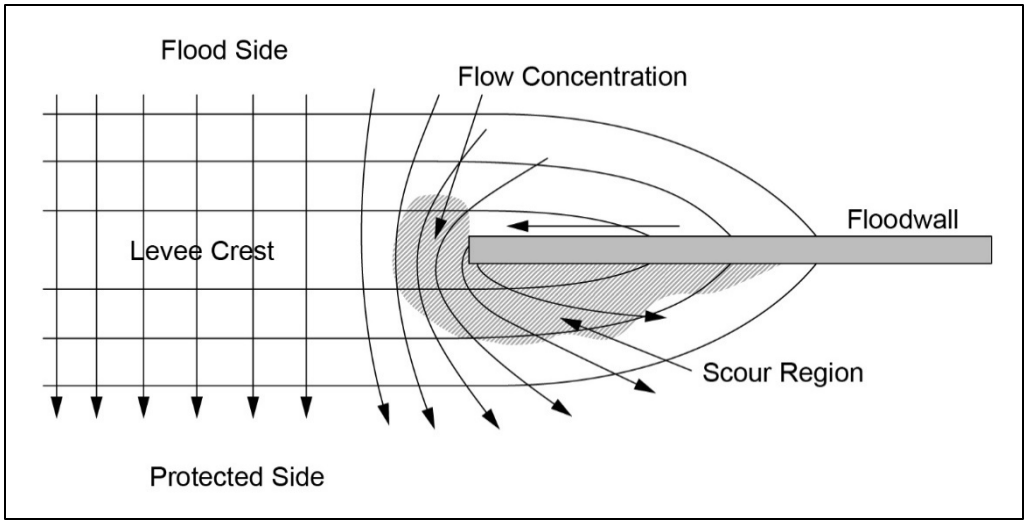

Figure 12.4. Diagram of Overtopping Erosion at Levee – Floodwall Transition

12.2.7. Earth Retaining Walls Perpendicular to Dam and Levee Embankments. Earth retaining walls oriented perpendicular to the axis of the water retaining earth embankment may be used to retain fill at the transition to a floodwall, closure structure, hydraulic structure, or pump station. An example of an older closure structure under construction is shown in Figure 12.5. These types of features require special compaction in order to prevent concentrated leak erosion along the walls, as described in paragraph 13.5.2. Sheet pile transitions from the wall into the levee are included after placement of the embankment fill. A sheet pile section with an interlock exposed can be cast into the wall to connect to the sheet pile transition/cutoff.



Figure 12.5. Transition with Earth Retaining Walls Perpendicular to an Earth Embankment (Louisville District)

12.2.8. Seismic Considerations.

12.2.8.1. Chapter 17 provides guidance on seismic performance, liquefaction, and cyclic softening for each wall type. Seismic distress of soils can vary from subtle ground cracking and settlement to large scale liquefaction, lateral spreading, and slope instability. Designers should consider features that are more resistant to seismic damage and/or easily and economically repaired following an earthquake over other cost-comparable alternatives. ER 1110-2-1806 lists design features that should be considered to reduce poor performance during seismic loading. The most applicable would usually be a wider embankment section at transitions.

12.2.8.2. The seismic performance of the transition between the embankment and a wall is critical, particularly for transverse cracking between soil and structures with rigid or deep foundations. After an earthquake, transitions should be inspected for signs of cracking or other distress. Unrecognized soil cracking can lead to preferential paths for internal erosion.

12.3. Scour and Erosion Protection.

12.3.1. Scour Protection. Walls may be subject to scour and erosion on the leveed side after overtopping (SE-1), on the front side of the wall (SE-2), and at transitions (PFM WT-1 and PFM WT-2). Transitions are discussed in the previous section. As noted in Chapter 3, scour and erosion at the wall (SE-1 and SE-2) is not itself a failure mode but can contribute to other failure modes. Scour is usually more critical for shallow-founded, cantilever, and anchor-pile walls that rely on passive resistance from surficial soils than for walls supported by deep foundations.

12.3.2. Scour on the Waterside of the Wall. Guidance for design for scour on the front side of the wall is provided in EM 1110-2-1913. Scouring at the wall footing should also be considered. Where it is anticipated, the wall should be protected with placed concrete, grouted stone riprap, rock-filled mattresses, or articulated concrete mats. These are described in section 12.3.5.

12.3.3. Overtopping Armoring.

12.3.3.1. The forceful, near vertical, impact of falling water due to still-water and wave overtopping at vertical walls imposes loads on the protection system that are vastly different than loads exerted by water flowing parallel to the protection surface. As a consequence, armoring systems fully capable of protecting backside slopes of levees and earthen levee transitions may not be appropriate for protecting the levee crown soil on the protected side of an overtopped wall. For example, individual stones will be dislodged in riprap protection, turf reinforcement mats might not withstand forces applied perpendicular to the mat, and soil or aggregate used as geocell fill will be flushed out by the water.

12.3.3.2. The alternatives that have sufficient strength, rigidity, and robustness to withstand high impact loads from overtopping water jets without loss of functionality include: cast-in-place reinforced and non-reinforced concrete, grouted stone riprap, rock-filled mattresses, and articulated cabled concrete mats. These four options have the disadvantage of adding weight, which could be problematic where foundation soils are weak. Wall armoring alternatives are discussed in section 12.3.5.

12.3.3.3. There is an alternative to armoring to protect a wall from scour and erosion due to overtopping. This is to increase the height of the wall so that overtopping occurs in other parts of the system. This overtopping section can be made at an earth levee or at a designated wall segment with armoring provided. This may be less costly than providing overtopping armoring for all wall segments.

12.3.4. Transition Erosion Protection.

12.3.4.1. Where an earth embankment abuts against a wall, gated structure, or other transition point, additional armoring is required to prevent erosion or scour caused by water and wave overtopping at this location. As mentioned earlier and shown in Figure 12.4, flow turbulence is created by the abrupt change in the structure surface profile. Turbulence is also caused by redirection of flow at unequal top elevations at the transition. The turbulence increases local flow velocity at the transition. To prevent weakness along the transition interface, the armoring system covering the earthen levee can be physically tied into the vertical structure.

12.3.4.2. Because transitions are characterized by sudden change in the structure profile and varying topography, flexible or articulating armoring systems are typically employed. The robust wall armoring alternatives listed in paragraph 12.3.3.2 are applicable. Scour and erosion protection alternatives are fully described in section 12.3.5.

12.3.5. Alternatives for Wall Armoring or Scour and Erosion Protection.

12.3.5.1. Introduction. This section provides information on alternatives for providing armoring of walls and transitions. Design of the overtopping protection is performed by the hydraulic engineer with input on viability, constructability, cost, etc., provided by the geotechnical and structural engineers and other members of the project team.

12.3.5.2. Cast-in-Place Reinforced and Non-Reinforced Concrete. Levee soil can be protected by an impermeable, continuous, reinforced concrete slab containing light reinforcement mesh. Alternately, the concrete slab can be made thicker without reinforcing. The slab is formed, and concrete is placed to cover the area from the base of the wall, on the protected side, out a distance beyond the expected splash-down point of the overtopping jet. The slab can be tied into the wall or separated by a bond breaker to allow differential settlement without damage to the wall. This provides a rigid horizontal surface that can absorb the impact of falling water and divert the overtopping jet toward the backside slope of the earthen levee.

12.3.5.2.1. Advantages include high strength and durability, readily available materials, and flexibility to vary project dimensions as needed. Where appropriate, the concrete apron can be designed as a roadway for vehicular traffic.

12.3.5.2.2. The main disadvantage of reinforced and non-reinforced concrete is its relative intolerance to differential settlement. In addition, when future plans call for a change in grade, concrete aprons cannot be easily removed and re-used.

12.3.5.3. Grouted Stone Riprap. This protection method consists of conventional riprap armoring placed on top of a bedding layer. It is then filled with a concrete grout mixture. The purpose of the grout is to solidify the riprap protection into a solid, continuous, impermeable structure. This prevents loss of individual stones when impacted by the falling water jet. Because the grout mixture has minimal strength in tension, grouted stone riprap will have little tolerance for differential settlement of the underlying levee crown. Once the bond between adjacent stones is broken, riprap stones can be dislodged by the overtopping flow.

12.3.5.3.1. Advantages of grouted stone riprap are ease of installation, capability to protect varying terrain, and ease of removal for future increases in levee height. However, the removed riprap is not readily re-usable because much of the grout will remain intact.

12.3.5.3.2. The main disadvantage of grouted stone riprap is the uncertainty associated with the long-term integrity of the grout/stone bonds if there is ground settlement. Another disadvantage is this alternative cannot support a roadway for vehicular traffic.

12.3.5.4. Rock-Filled Mattresses. Rock-filled mattresses consist of a flat cage, basket, or container fabricated of geogrid material. The mattresses are filled with stone or other suitable material varying in size from 2 in. (5 cm) up to about 5 in. (10 cm). The baskets allow small stones to be held together to provide good stability in place of the larger stone that would be required without the baskets. The baskets are laid flat like a mattress and placed directly on top of a geotextile filter cloth or conventional gravel filter layer. Often the geotextile filter cloth is attached to the underside of the mattress prior to placement. Overtopping water landing on the mattress fills the voids between stones and helps reduce the flow energy. Soil could be placed over the mats to support vegetative growth.

12.3.5.4.1. Advantages of rock-filled mattresses include lower cost for smaller stone, rapid installation, off-site fabrication, and the capability to remove the protection and re-use the mattresses if the levee needs to be raised. Rock-filled mattresses are flexible. They can adapt to terrain changes easily and have good distribution of weight over the underlying soil. They are tolerant of differential settlement and will continue to be fully functional if the ground settles beneath them.

12.3.5.4.2. Disadvantages of rock-filled mattresses include: the need for heavy equipment to lift and place the mats, potential gaps between adjacent mats and next to the wall, and long-term durability of the geogrid material when subjected to UV radiation. They are labor intensive to install. In addition, they have limited durability when exposed to saltwater if the baskets use a metallic wire. Although the mats can support vehicular traffic, there is a risk of damaging the geogrid material or the lacing that holds the mats together. For application at the base of walls, special attention is needed to ensure mattresses are placed with minimal gaps between adjacent units. Gaps between mattresses are weak points that could allow soil to escape if the geotextile is punctured.

12.3.5.5. Articulated Concrete Mattresses.

12.3.5.5.1. Articulated concrete mattresses consist of a single layer of concrete blocks. The blocks either have an interlocking shape, are held together by cables, or both. Cables are made of metal or other high-strength materials and are anchored at the ends of a mattress. Blocks can be solid or open, with gaps between adjacent blocks. The system may include anchors spaced throughout the mattress. Articulated concrete mattresses are fabricated off-site and rapidly installed using heavy lifting cranes. There is variation among brands in the degree of flexibility and ability to protect areas of rapid transition in profile shape.

12.3.5.5.2. Mattresses are laid over a filter layer and adjacent mattresses are interlocked or cabled together to form continuous stable units. While a geotextile fabric typically is used for the filter layer, these mats will be most effective if placed over a stone or gravel bedding layer. The stone or gravel is sized to prevent movement of the gravel through the gaps in the mat. Stone or gravel bedding is preferred where mats will be subject to the battering of overtopping jets of water.

12.3.5.5.3. Advantages of articulated concrete mats include off-site fabrication, rapid placement, capability to cover irregular terrain, tolerance to differential settlement, and long service life. The mats are easily removed and re-used without loss of effectiveness. They have no problem supporting low-speed vehicular traffic. These systems are readily available in a variety of sizes and weights. They may be placed as a single mattress that covers a substantial area. Cabled systems with anchors may have substantially less weight than equivalent riprap or concrete armor units that provide the same degree of protection.

12.3.5.5.4. Disadvantages of cabled systems may include higher costs than some alternative systems and a requirement for heavy equipment to place the mattresses. Adequately sized gravel underlayers are needed when stone is used for the bedding layer to prevent loss of material through gaps. In addition, cabled systems may not key well with an adjacent concrete or steel wall.

12.3.5.6. Riprap. Riprap comprised of stone or concrete waste placed over a filter bedding layer or filter blanket. It is commonly used to reinforce transition areas. A major disadvantage of riprap is that it does not key to a concrete or steel structure. If riprap is used at the transition, the riprap needs to be of sufficient size to withstand the hydraulic forces while only partially keyed into the rock matrix. Also, the flow of most concern is directed downslope. The larger riprap adds surcharge weight that is supported by the subsoil. This can be a serious disadvantage with weaker soils. Design guidance on sizing riprap is given in EM 1110-2-1601.

12.3.5.7. Gabions. Gabions are similar to rock-filled mattresses in that it is a basket or compartmented rectangular container made of wire or synthetic mesh. Gabions are typically more rectangular and higher in profile than the rock-filled mattress. In addition, they are available in a wide range of sizes. When filled with cobbles or other rock of suitable size, the gabion becomes a flexible and permeable unit for building flow- and erosion-control structures. Gabions may be used to contain a smaller-sized riprap and prevent loss of riprap at flow concentration points. Gabions may be placed flat against the vertical face of a concrete structure without concern about keying the units into the structure.

12.3.5.7.1. Advantages of gabions are that they can be built along vertical walls and provide good stability.

12.3.5.7.2. Disadvantages are greater weight than synthetic materials, labor intensive to install, and limited durability when exposed to saltwater if the baskets are constructed using metallic wire.

12.3.5.8. Fabric Mattress. A fabric mattress is a grout-filled geotextile mattress or tube used for streambank protection. The protection is placed as an empty geosynthetic bag that is divided into longitudinal tubes with interconnecting tubes. The mattress is then filled in -situ with a cement slurry to form a rigid mattress conforming to the substrate contours. Once the injected concrete sets, the structural support offered by the geosynthetic bag is less critical to the success of the protection. Thus, weathering of the bags is not a crucial consideration.

12.3.5.8.1. Advantages of fabric mattresses include ease of construction on varying terrain and relatively low cost. If underlying soil settles or is washed out, the mattress will be capable of spanning soil gaps of short distances.

12.3.5.8.2. Disadvantages of fabric mattresses include a requirement for heavy equipment for the installation, and greater weight than with synthetic structures.

12.3.5.9. Turf Reinforcement Mats. Turf reinforcement mats (TRMs) combine vegetative growth and synthetic materials to form a high-strength mat that helps to prevent soil erosion in drainage areas and on steep slopes subjected to flowing water. They are typically made of synthetic material that will not biodegrade. The mat material creates a foundation for plant roots to take hold, extending the viability of grass beyond its natural limits and holding it in place during the growth phase.

12.3.5.9.1. Advantages of TRMs include rapid placement, increased flow resistance, and natural plant growth yielding aesthetically pleasing erosion protection.

12.3.5.9.2. A disadvantage of TRMs is slope vulnerability while the vegetation is taking root.

12.4. Concrete Walls – Special Types of Monoliths.

12.4.1. Introduction. Concrete walls are constructed in monoliths separated by joints to accommodate shrinkage and expansion. Frequently some of the monoliths in a wall accommodate changes in alignment of the inclusion of other project features. This section provides guidance for layout and design of those monoliths.

12.4.2. Change-of-Alignment Monoliths.

12.4.2.1. Changes in Alignment Require Special Monoliths. Monoliths with less than a 10-degree change (horizontal) for shallow-founded walls or a 5-degree change for deep-founded walls do not need to be analyzed as a special category. Where practical, change of alignment should occur within the monolith as near to the center as possible with the shortest leg being no less than 5 ft. (1.5 m). Monoliths of short length or abrupt alignment changes may require very wide bases. Adjacent monoliths should not be considered to provide resistance in the stability analysis.

12.4.2.2. Reinforcing steel in the base should generally be installed perpendicular to the wall, requiring radial bar patterns at changes in direction. When the change in direction is very little (< 5 degrees) or the wall change is near 90 degrees (> 85 degrees), reinforcement in the base can be placed on a rectangular grid. It is designed to account for skewness of the reinforcing bars relative to the application of bending moment.

12.4.3. Closure Monoliths. Openings may be required in many floodwalls. The openings provide access for commerce, safety, and recreation during periods of low river stages. The number and size of openings depend on local requirements. Each opening is provided with a moveable closure structure. During flood periods, the closure structure is installed on the base and abutment monolith/monoliths. These special monoliths are designed both for the design water load during floods and traffic loads during low-water periods.

12.4.4. Drainage Structure Monoliths. When topography, foundation conditions, and economics permit, it is preferable that structure housing gates and pumps are designed as integral parts of a floodwall. These special monoliths should be designed to minimize differential settlement across a monolith or between adjacent monoliths. For guidance on these monoliths relative to the pipes that connect to them, see EM 1110-2-2902.

12.5. Joints and Waterstops for Concrete Walls.

12.5.1. General. For walls, some combination of expansion, contraction, or construction joints are required for design, crack control, and constructability. For design, joints provide independent monoliths consistent with design assumptions.

12.5.2. Joint Terminology.

12.5.2.1. Expansion Joint. An expansion joint is a formed gap between concrete monoliths. The gap is filled with pre-formed expansion joint filler that allows movement of the concrete monoliths.

12.5.2.2. Construction Joint. A construction joint allows for dividing the structure into manageable sizes for concrete placement and to help address changes in geometry. The joint may coincide with an expansion joint or a contraction joint where reinforcement is usually not continuous through the joint; or it may be within a wall monolith and reinforcement is continuous through the joint.

12.5.2.3. Contraction Joint. A contraction joint is a formed division or weakness in a concrete member where no reinforcement crosses the joint.

12.5.2.4. Partial Contraction Joint. A partial contraction joint is a contraction joint where no more than 50 percent of reinforcement passes through the joint.

12.5.2.5. Dowels. Dowels are smooth steel bars used to control translation and differential movement across a joint.

12.5.2.6. Key. A key is a concrete protrusion formed across a joint to control translation and differential movement across the joint.

12.5.3. Expansion Joints.

12.5.3.1. Expansion joints are used to allow movement between concrete monoliths without transferring significant loads across the joint as shown in Figure 12.6. Expansion joints are designed to prevent the crushing and distortion (including displacement, buckling, and warping) of the abutting concrete structural members that might otherwise occur due to the transfer of compressive forces. In general, expansion joints are needed to prevent spalling and prevent monolith interaction. Compressive forces may be developed by thermal expansion, applied loads, or differential movements arising from the configuration of the structure or its settlement.



Figure 12.6. Differential Settlement Between T-Type Wall Monoliths

12.5.3.2. Based on the predicted expansion or movement of a wall monolith, a gap of adequate width is formed as part of the expansion joint. In relatively thin reinforced concrete walls, such joints should be located where considerable expansion or unequal settlement is anticipated. Examples are at changes in alignment or grade, abrupt changes in section, or intermediate points when needed.

12.5.3.3. In massive reinforced concrete walls and in gravity walls on rock, expansion joints are not usually provided. Exceptions are at abrupt changes in section or at angle monoliths to relieve thrust from expected expansion. Adequate chamfers on each side of each expansion joint are usually sufficient to prevent spalling. Where walls are exposed to atmosphere on both sides over most of their height, expansion joints may be required.

12.5.3.4. Expansion joints also divide the structure into independent monoliths and thus also serve as construction joints. Reinforcing steel, corner protection angles, and other fixed metal embedded in or bonded to the surface of the concrete, should not extend through an expansion joint. Where water tightness is needed, waterstops are provided as outlined in section 12.5.11.

12.5.3.5. Expansion Joint Filler. A compressible material (minimum 50 percent compressible) is used to form the required gap at expansion joints. The thickness of joint filler necessary to provide stress relief at a joint should be determined from the estimated initial contraction and subsequent thermal expansion from maximum temperature variation. The predicted gap should be rounded up to the next standard width of joint filler. The minimum thickness of expansion joint filled based on expansion joint spacing is shown in Table 12.1.

Table 12.1
Minimum Thickness of Expansion Joint Filler

Expansion Joint Spacing	Joint Filler Thickness
Less than 50 ft. (15 m)	½ in. (1.3 cm)
50–79 ft. (15 to 24 m)	¾ in. (2 cm)
80–100 ft. (24 to 30 m)	1 in. (2.5 cm)

12.5.4. Contraction Joints.

12.5.4.1. These are intentional planes of weakness designed to regulate cracking that may occur due to the unavoidable, often unpredictable, contraction of concrete structural members or monoliths. Since it is impractical and uneconomical to provide sufficient reinforcement to prevent cracks entirely, it is desirable to control their location, insofar as is practicable. This is done by vertical contraction joints across which reinforcement does not extend. Contraction joints can also divide the structure into convenient working units and thus also serve as construction joints.

12.5.4.2. No exact rules for the location of contraction joints can be made. Each job should be studied to determine where the joints should be placed. The study should consider the requirements of structural design, the volume of concrete which can be placed economically in a single working unit, and the economical use of form units. Typically, contraction joints have been spaced at no more than 30 ft. (9 m). See EM 1110-2-2104 for more information on contraction joint spacing.

12.5.4.3. For the contraction joint, the formed divider or weakness can be partial or full depth. The joint may or may not extend through the footing when the top of footing is buried more than 1 ft. (0.3 m). For buried footings temperature differentials are minimized and small cracks are inconsequential.

12.5.4.4. Usually a contraction joint has a plane surface without a key or dowels. Where water tightness is needed, waterstops are provided as outlined in section 12.5.11. Where large differential movements of the wall are expected from loading or settlement, keys, dowels, or a partial contraction joints are sometimes used to reduce movement across the joint.

12.5.5. Horizontal Construction Joints. These joints are provided to divide a wall into convenient working units, but they should be kept to a minimum. Keys are not recommended in horizontal construction joints as they interfere with good cleanup of the concrete surface. In addition, a well-bonded roughened flat surface is more dependable to transfer shear. Waterstops are usually needed to prevent leakage when water is retained permanently by the wall. Waterstops are usually not needed for walls with infrequent flooding. The small amount of seepage through the joint for a short duration does not affect wall stability.

12.5.6. Gravity Concrete Walls. For this type of wall, the horizontal construction joint locations are dictated by the height of each lift of concrete placement. Concrete for gravity walls is usually placed in lifts up to 10 ft. (3 m) high. The top surface of each lift is cleaned and roughened by high-pressure water jets before placing the next lift.

12.5.7. Cantilever Concrete Wall Stems.

12.5.7.1. A generalized joint layout for a typical monolith is shown in Figure 12.7. Expansion joints are used to separate individual monoliths and to provide space to allow for thermal expansion of the wall. For longer monoliths, contraction joints should be considered for use in the wall stem and are typically spaced 1–3 times the height of the stem. Typically, taller walls would tend toward the lower end of the stated range and shorter walls would tend toward the higher end of the stated range. A construction joint should be provided between a wall stem and base to enable formwork construction.

12.5.7.2. Vertical contraction joints within the monolith may be located only in the stem, and the footing may be a continuous placement, as shown in Figure 12.7. For long reaches of straight wall with uniform loading and well-defined consistent foundation information, expansion joints can be alternated with full monolith (stem and footing) contraction joints, as shown in Figure 12.8. When expansion joints are not used at all monolith joints, maximum expansion joint spacing should be limited to 100 ft. (30 m). To the extent possible, uniform joint spacing should be used to provide better constructability and more economic designs.

12.5.8. Shrinkage and Temperature Reinforcement. The amount of required shrinkage and temperature steel varies with the distance between control joints. Control joint spacing greater than 30 ft. (9 m) increases the minimum required shrinkage and temperature steel per EM 1110-2-2104. A balance of shrinkage and temperature steel, joint spacing and wall alignment should be evaluated when laying out monolith and contraction joint spacing. Figure 12.9 shows examples of different joint layouts and required shrinkage and temperature reinforcement.

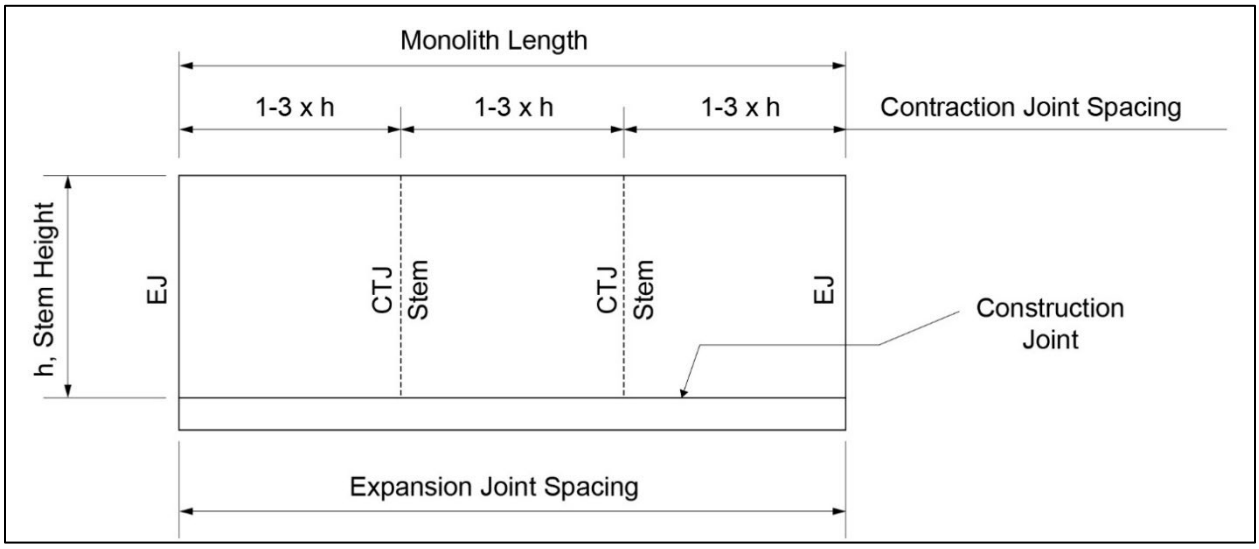

Figure 12.7. Typical Monolith, Generalized Joint Layout

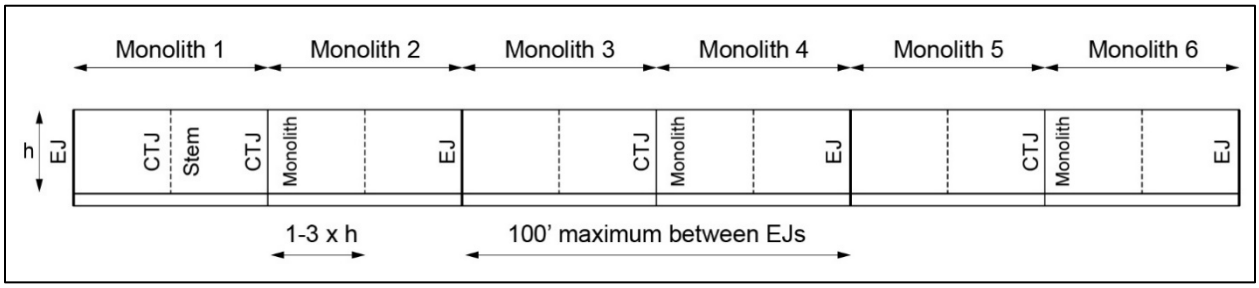

Figure 12.8. Special Case of Straight Wall with Uniform Loading and Consistent Foundation Strength

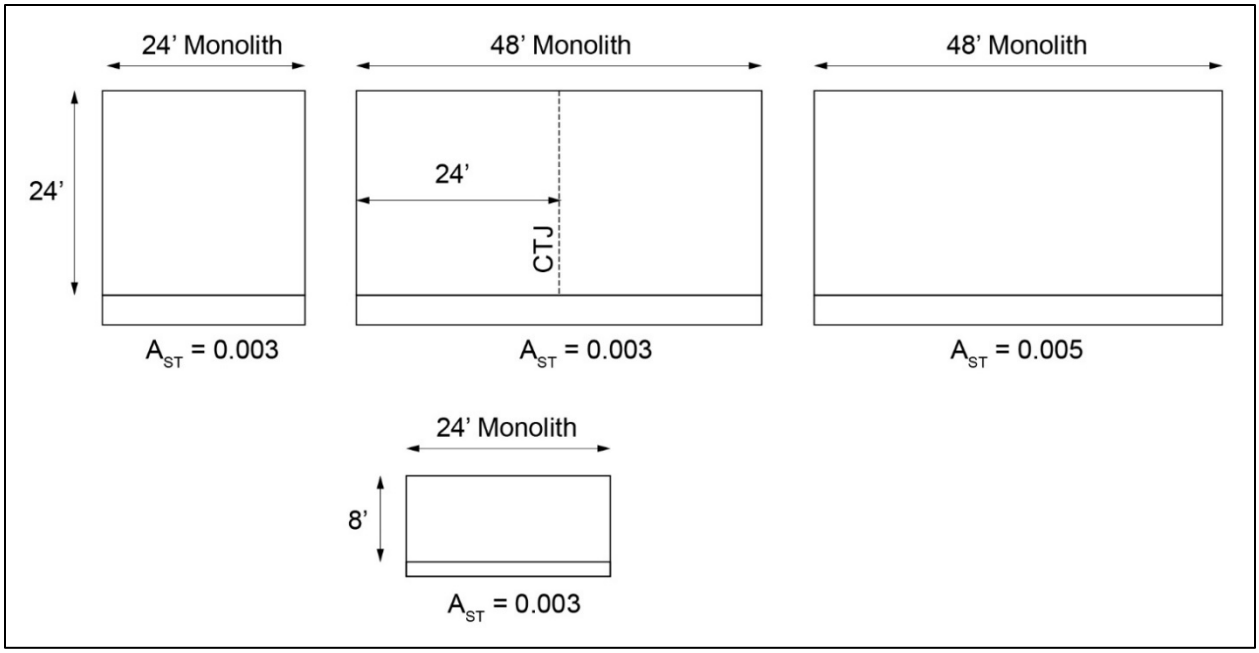

Figure 12.9. Example: Shrinkage and Temperature Requirements for Various Joint Layouts

12.5.9. Joints at Lifts. Traditionally, additional horizontal joints in the wall stem should be provided by lifts approximately 10 ft. (3 m) high. The use of self-consolidating concrete allows for higher lift or full lift placement of taller walls. The surface of each joint should be roughened to obtain as much shear strength across the joint as possible.

12.5.10. Joint Details for Floodwalls. Expansion and contraction joint details for floodwalls are illustrated in Figure 12.10 through Figure 12.14. Contraction joints (type A) should contain a bond-breaker. Expansion joints (type B) should also be used at transitions and other changes in geometry. Pre-formed expansion joint filler and adequate chamfering of corners should be used. Change in alignment monoliths should be isolated with expansion joints at the ends of the monolith. In bases and stems of junctures of walls with gate wells, pump stations, gate abutments, and similar structures, wall alignment should be adjusted to allow the wall to be near perpendicular to the abutting structure or stub wall.

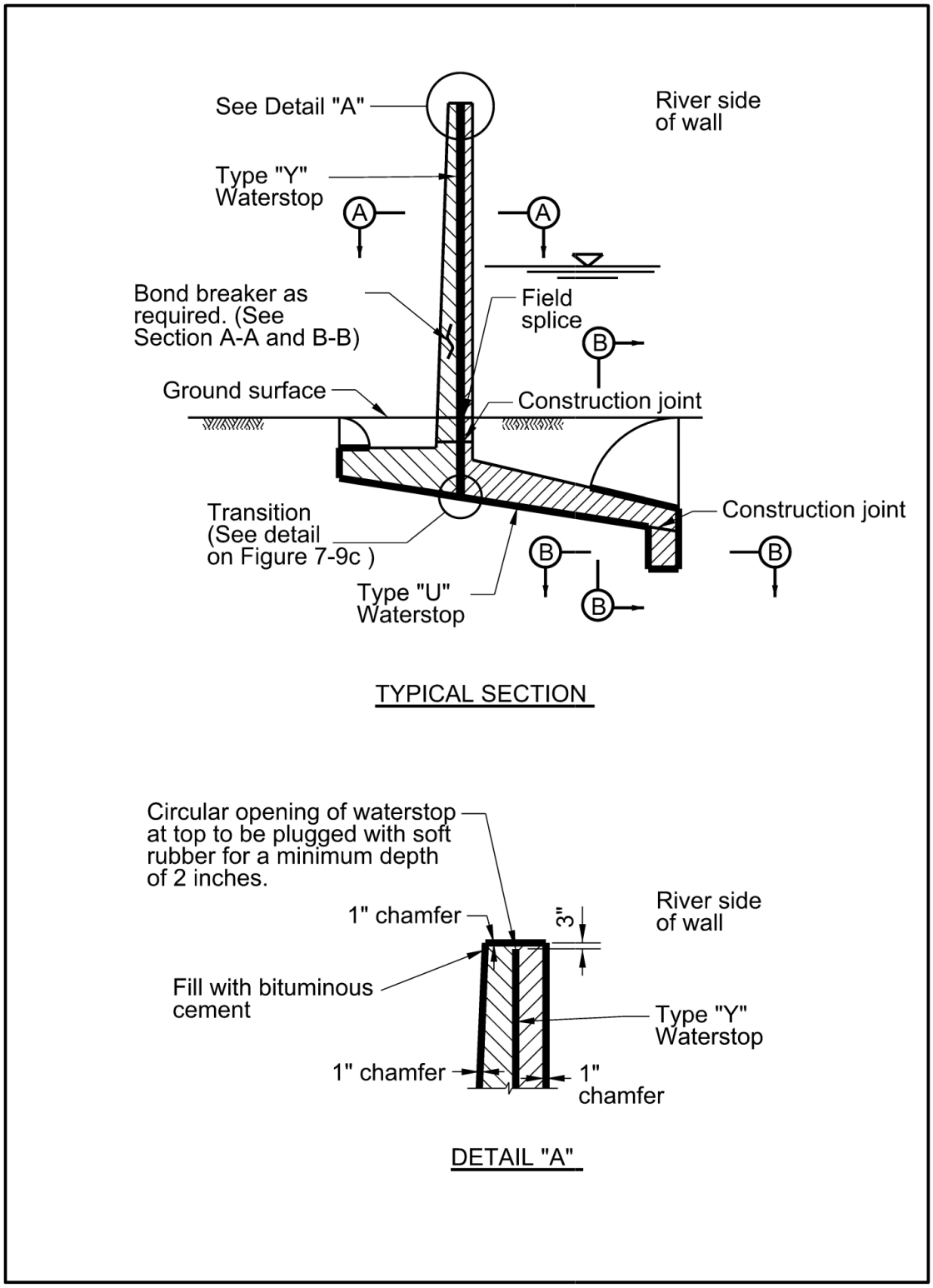

Figure 12.10. Typical Joint and Waterstop Details

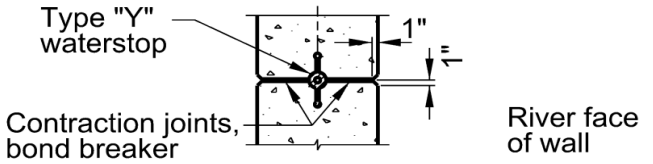

MONOLITH JOINT TYPE "A"

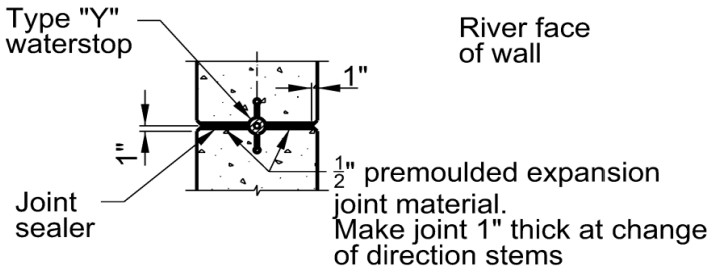

MONOLITH JOINT TYPE "B"

SECTION A-A

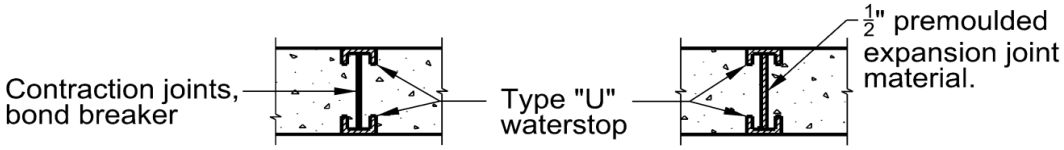

MONOLITH JOINT TYPE "A"

MONOLITH JOINT TYPE "B"

SECTION B-B

MONOLITH JOINT DETAIL

NOTES:

1. Extreme care should be exercised in placing type "U" rubber waterstop to insure firm contact with the prepared subgrade throughout its entire contact area.

2. Type "A" joint used in straight runs of wall, 30 feet spacing

3. Type "B" joint used in junctures of wall with gate wells, pump stations and gate abutments, and in change of direction monoliths.

Figure 12.11. Typical Joint and Waterstop Details (continued)

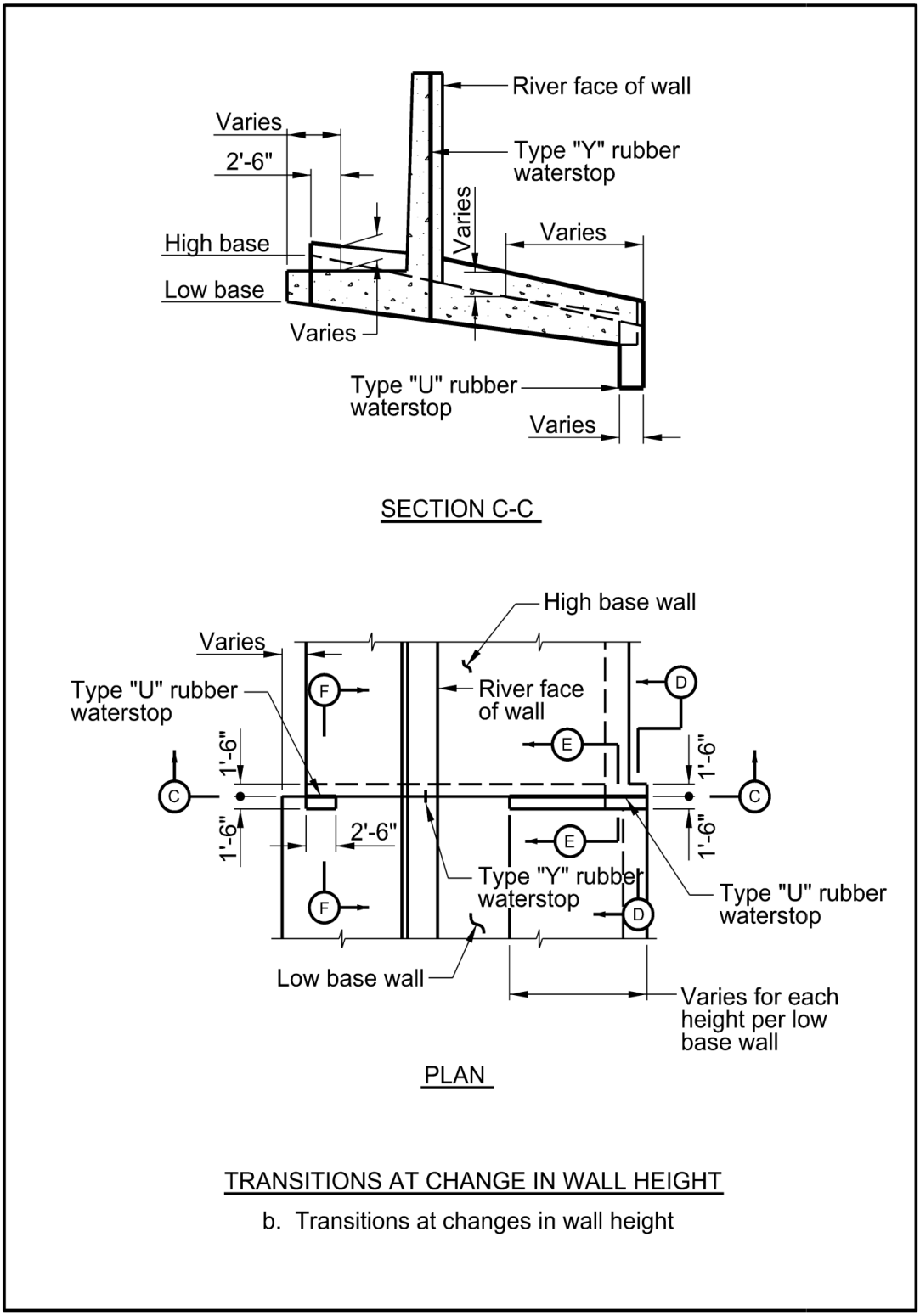

TRANSITIONS AT CHANGE IN WALL HEIGHT

b. Transitions at changes in wall height

Figure 12.12. Transitions at Change in Wall Height

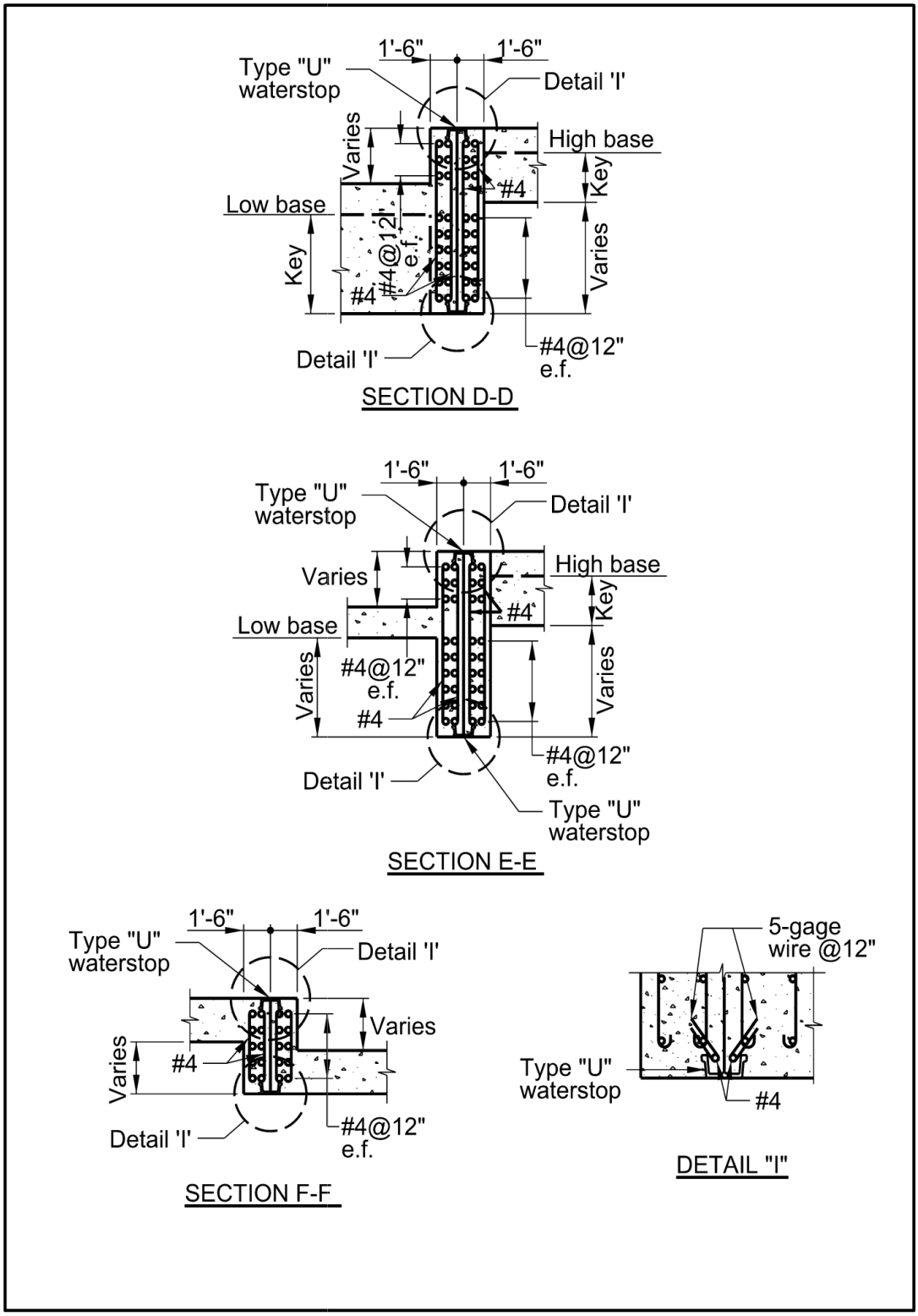

Figure 12.13. Transitions at Change in Wall Height (continued)

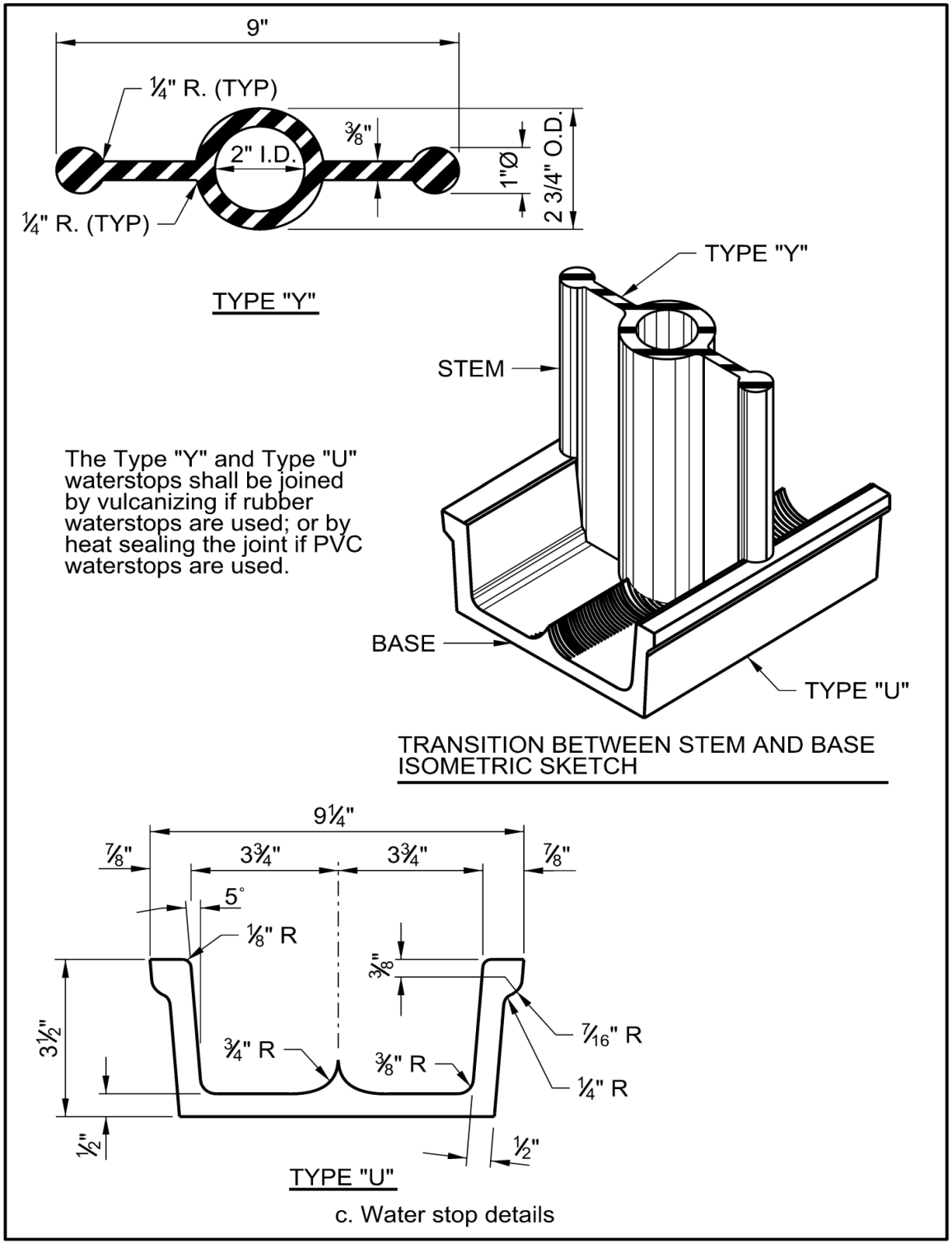

Figure 12.14. Waterstop Details

12.5.11. Waterstops.

12.5.11.1. General. Waterstops are provided across joints where water tightness is required. Nonmetallic waterstops, such as rubber or polyvinyl chloride (PVC) waterstops, should be used according to EM 1110-2-2102. The waterstop must be able to accommodate movement expected at a joint from shrinkage, thermal effects, settlement, loading, etc. The waterstop must also be capable of withstanding possible head differential across the joint. Waterstops are selected for the application based on EM 1110-2-2102 and manufacturer's information. For special floodwall waterstop details, see Figure 12.10 through Figure 12.14.

12.5.11.2. Inspection. Careful inspection is required for waterstop installation, especially with the type "U" waterstop (Figure 12.14), to see that special reinforcing is properly placed and that concrete is placed under the upper waterstop in the base slab. The type "U" waterstop is used on the perimeter of the base to control water flow through the joint.

12.5.11.3. Waterstop to Sheet Pile Connections.

12.5.11.3.1. Figure 12.15 and Figure 12.16 show a 3-bulb waterstop connection to steel sheet pile where the interlock is located at the joint and where the interlock is located away from the joint, respectively. The connection is typical and independent of the waterstop type. The waterstop shown permits vertical and lateral movement of the joint. The end of the waterstop can terminate, as shown in the figures, near the edge of the wall base, or outside the cover distance for thicker bases. This permits the contractor easier access to fill the void spaces of the waterstop with hydrophilic sealant.

12.5.11.3.2. When the sheet pile interlocks do not align with the wall joints, it is recommended to use arc welded studs so the plate can be positioned without regard to bolt clearances, as shown in Figure 12.15.

12.5.12. Joints Between Walls and Stiffer Concrete Structures. When a more flexible wall connects to a more rigid structure, consideration must be given to the difference in deflections likely to occur. Examples of this are concrete capped I-wall transitioning to a T-wall, or an I-wall or T-wall abutting a pump station or gate well. The relative movement may tear embedded waterstops. To accommodate these large movements between walls, a special sheet pile section with an L-Type waterstop may be used. Attention should be paid to water tightness of the joint, differential settlement, and reaction loads from the I-wall to the structure if it restrains the floodwall from deflection under load.

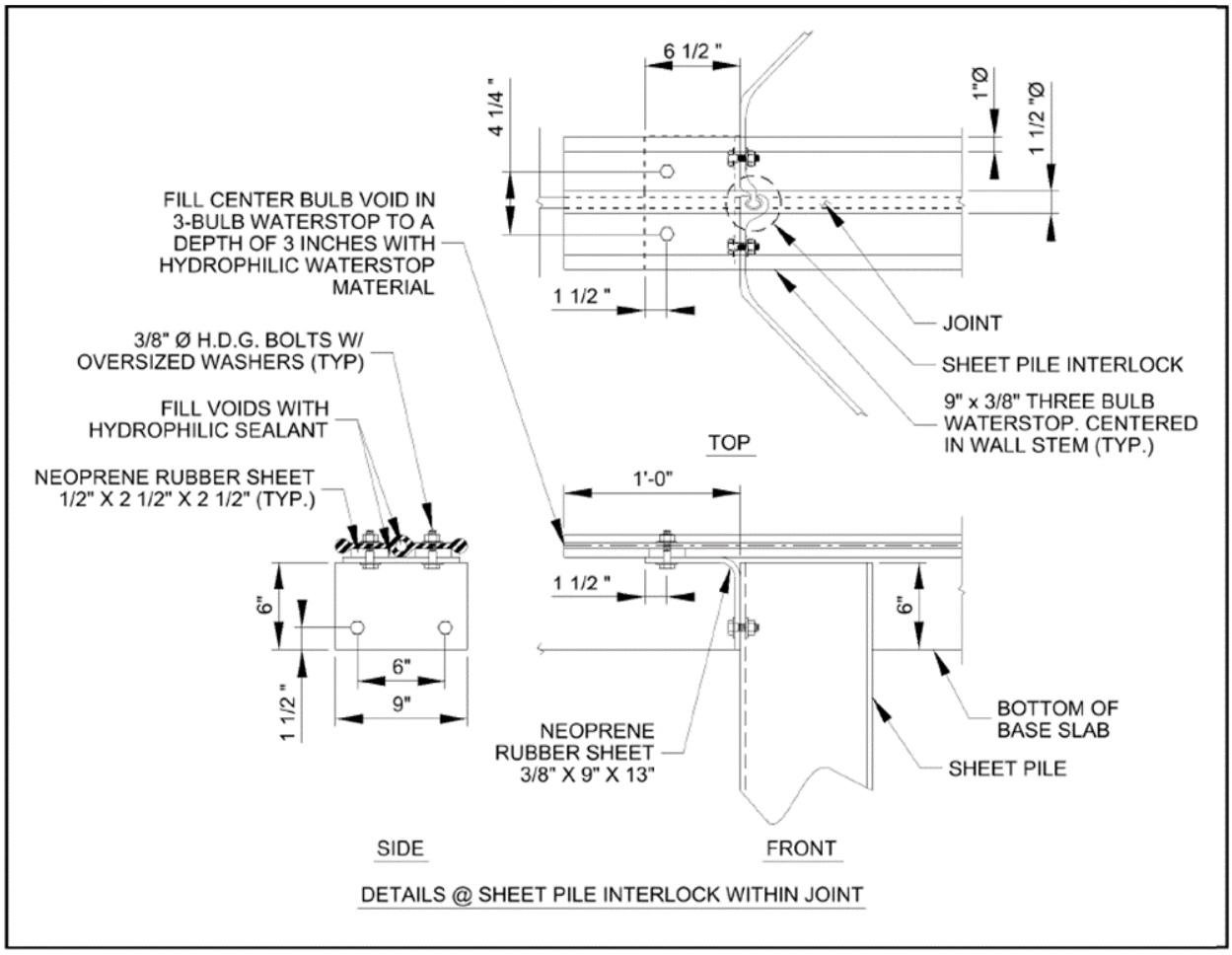

Figure 12.15. Waterstop Attachment to Sheet Pile

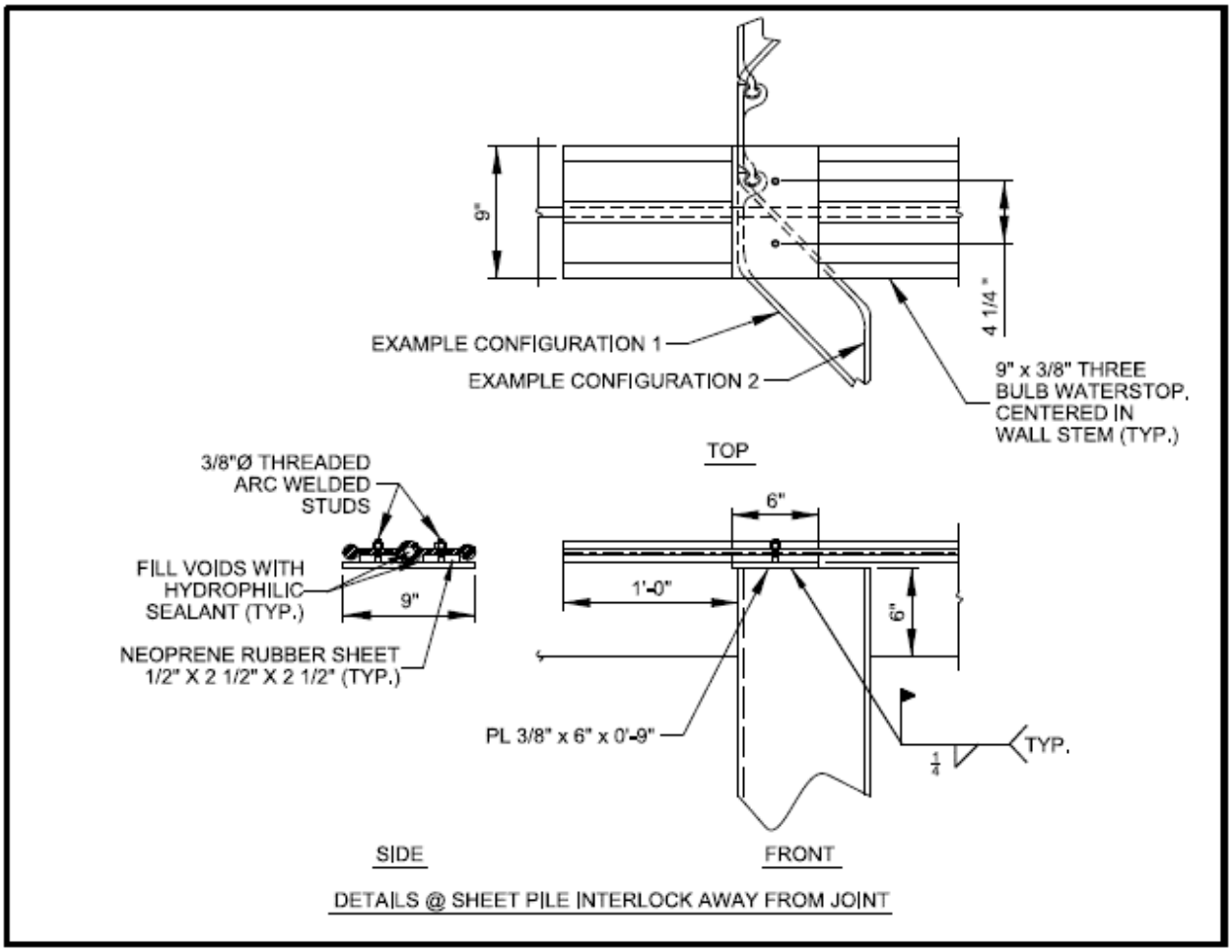

Figure 12.16. Waterstop Attachment to Sheet Pile (continued)

12.6. Corrosion Protection for Steel Piles.

12.6.1. General. The corrosion process in steel piling (deep foundation piles or sheet piles) is highly dependent on the environment in which it is placed. In marine environments, the rate of corrosion is related to the type of water to which the pile is exposed. Typically, fresh water is the least corrosive and salt water the most, with contaminants and pollutants playing a major role in magnifying its corrosiveness. The critical zone for sheet piles exposed to water is the splash zone, the area between the still water elevation and the upper limit of wave action. This area corrodes at a much greater rate than if it remained completely submerged.

12.6.2. Corrosion Rate. Unprotected, exposed steel corrodes at varying rates averaging from 2 to 10 mils per year depending on the surrounding atmospheric conditions (rural versus heavy industrial). Corrosion rates usually decrease after the first few years of exposure. Steel piles driven in natural, undisturbed soil have a negligible corrosion rate due to the deficiency of oxygen at levels just below the ground line. Increased corrosion rates for piles in organic or fresh fills should be anticipated due to oxygen replenishment. Romanoff (1962) summarizes studies of corrosion in piles.

12.6.3. Protection. For permanent projects, steel piles must be protected against corrosion when exposed directly to air or water (outside of soil). Piles should also be protected when driven into fill or when backfilled. The extent of protection should account for uncertainty in soil elevation, water table, fill elevations, pile driven depth, etc. Piles driven into undisturbed soils do not require corrosion protection.

12.6.4. Methods of Protection.

12.6.4.1. The most common way of protecting steel piles against corrosion is through the use of coatings. Coal tar epoxy is widely accepted for this application. If the piling is driven in fill where settlement is anticipated, the coating should cover the area in contact and extend a minimum of 2 ft. (0.6 m) into undisturbed soils. For piling exposed to water, it is critical that the coating cover the splash zone and extend a minimum of 5 ft. (1.5 m) below the point where the sheeting remains submerged. See EM 1110-2-3400 for more on coatings.

12.6.4.2. An additional means of providing corrosion resistance is by specifying ASTM A-690 steel. This steel offers corrosion resistance superior to either A-328 or A-572 through the addition of copper and nickel as alloy elements.

12.6.4.3. Another possible method of protecting steel pile is through the use of cathodic protection. The corrosion process is electrochemical in nature and occurs wherever there is a difference in electric potential on the pile's surface. In an effort to provide electrical continuity, a continuous No. 6 rebar is provided atop the piling. The rebar is welded at each pile and terminated at monolith joints where a flexible jumper is required to connect the bars. The system must be externally charged to halt the flow of electric current, thus suppressing the corrosion process. For this reason, a passive solution such as coating the pile is preferred for most situations.

12.6.4.4. In some cases, a larger pile section may be specified to provide for the anticipated loss of section resulting from corrosion. However, corrosion rates are difficult to predict and use of a larger section must not be relied on for critical structures.

12.7. Backfill.

12.7.1. Material Choice. Many types of material can be used for backfill. It is advisable to use locally available material when possible. Unusually poor foundation material, or a need to control piping, may require importation of select material. See Chapter 13 for additional guidance on placement of backfill.

12.7.2. Materials. It is strongly recommended that cohesionless materials, such as clean sands, be used for wall backfill materials. Cohesionless materials have more predictable properties than cohesive materials, are less frost susceptible, drain rapidly, and remain stable. Silty sands, silts, and coarse-grained soils containing some clay are less desirable since they drain slowly, are subject to seasonal volume changes, and may lose much of their strength with time. Shrinkage cracks may develop in clay which, when filled with water, can cause full hydrostatic pressures to act on the wall.

12.7.3. The results of two statistical studies of retaining wall failures (Tcheng and Iseux, 1972; Ireland, 1964) demonstrate that clay, as backfill or foundation material, is involved in most retaining wall failures. However, there are certain instances (such as walls adjacent to impervious clay cutoffs in dams or levee systems) where clay backfills may be unavoidable. These studies also show that improper design of the drainage system and/or the wall base are primary factors for most retaining wall failures.

12.8. Drainage and Seepage Control.

12.8.1. General. The type of drainage system required depends upon wall function. Drainage behind floodwalls has a completely different purpose than drainage behind retaining walls. The purpose of a drainage for floodwalls and other water retention structures is to safely collect seepage through and beneath the structure and discharge landward of the wall. This is intended to prevent the initiation of the internal erosion failure mode. Retaining walls that do not act as floodwalls typically collect water in the driving side backfill and discharge to the passive side ground surface. The goal of this is to prevent internal erosion and reduce pressure in the backfill. Improper drainage is one of the major causes of wall failures.

12.8.2. Retaining Wall Drainage.

12.8.2.1. Drainage systems are necessary to eliminate excess hydrostatic pressures on the failure plane and the wall stem due to water seepage and surface infiltration of rainfall. Important considerations are the type of soil backfill, amount of rainfall, groundwater conditions, and potential frost action. In some cases, the drainage system may be needed to prevent pressures from building up due to frost action in the backfill. It may also be needed to minimize pressures due to swelling of cohesive backfills. Water pressures for design analyses should consider both working drains and blocked drainage conditions.

12.8.2.2. Achieving an adequate factor of safety for an analysis considering blocked drainage is usually not good justification for omitting drains. Preferred practice is to provide drains. Lower factors of safety than specified herein may be justified where blocked drainage assumptions are combined with rare and/or conservative loading assumptions. All such deviations from recommended safety factors should be supported by an assessment of expected drain reliability, consideration of risk as described in Chapter 3, and a justification that the factor of safety is reasonable in light of the analyzed conditions. Deviations will require coordination and approval by CECW-EC.

12.8.2.3. Control of Surface Water. All retaining walls should have adequate surface drainage to dispose of surface water. A layer of impervious soil should be placed on top of the soil backfill to reduce surface infiltration of rainfall.

12.8.2.4. Control of Water in Backfill. The most effective way to control drainage within the soil backfill is an inclined drainage blanket with longitudinal drain as shown in Figure 12.17. The inclined drainage blanket will minimize excess hydrostatic pressures on the failure plane due to groundwater seepage and surface infiltration of rainfall. A drain adjacent to the retaining wall is less effective and will often result in higher loads against the wall, as shown in Figure 12.18. However, for relatively low walls (typically less than 10 ft. (3 m) high), these higher loads may not greatly affect the final design and drains adjacent to the wall are often used.

12.8.2.5. Drains adjacent to the wall may be either a drainage blanket as shown in Figure 12.19 or a prefabricated drainage composite as shown in Figure 12.20. Whenever a prefabricated drainage composite is used adjacent to the retaining wall, the crushing strength of the prefabricated drainage composite should be greater than three times the maximum lateral earth pressure acting on the wall. Prefabricated drainage composites are not recommended for inclined drains due to possible damage during compaction of the soil backfill and possible sliding along the plane of the drain (Smith and Kraemer, 1987; Kraemer and Smith, 1986).

12.8.2.6. Where frost penetration is a problem, a drainage system as shown in Figure 12.21, should be used. If a cohesive soil backfill is used, it can be placed within properly drained granular material, as shown in Figure 12.17. This will prevent changes in moisture content of the clay and hence reduce cracking and swelling potential.

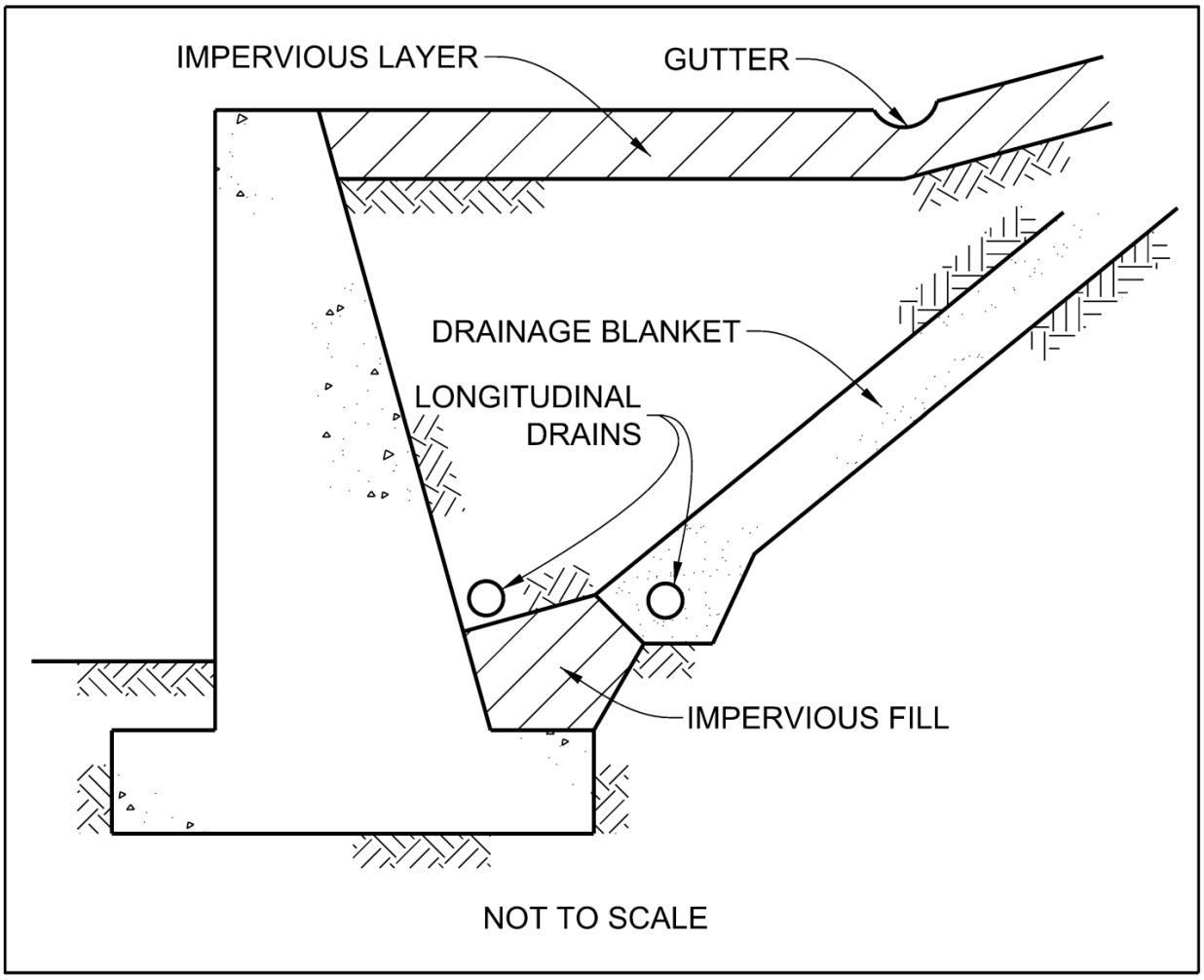

Figure 12.17. Inclined Drainage Blanket for Retaining Wall (Department of the Navy, 1982)

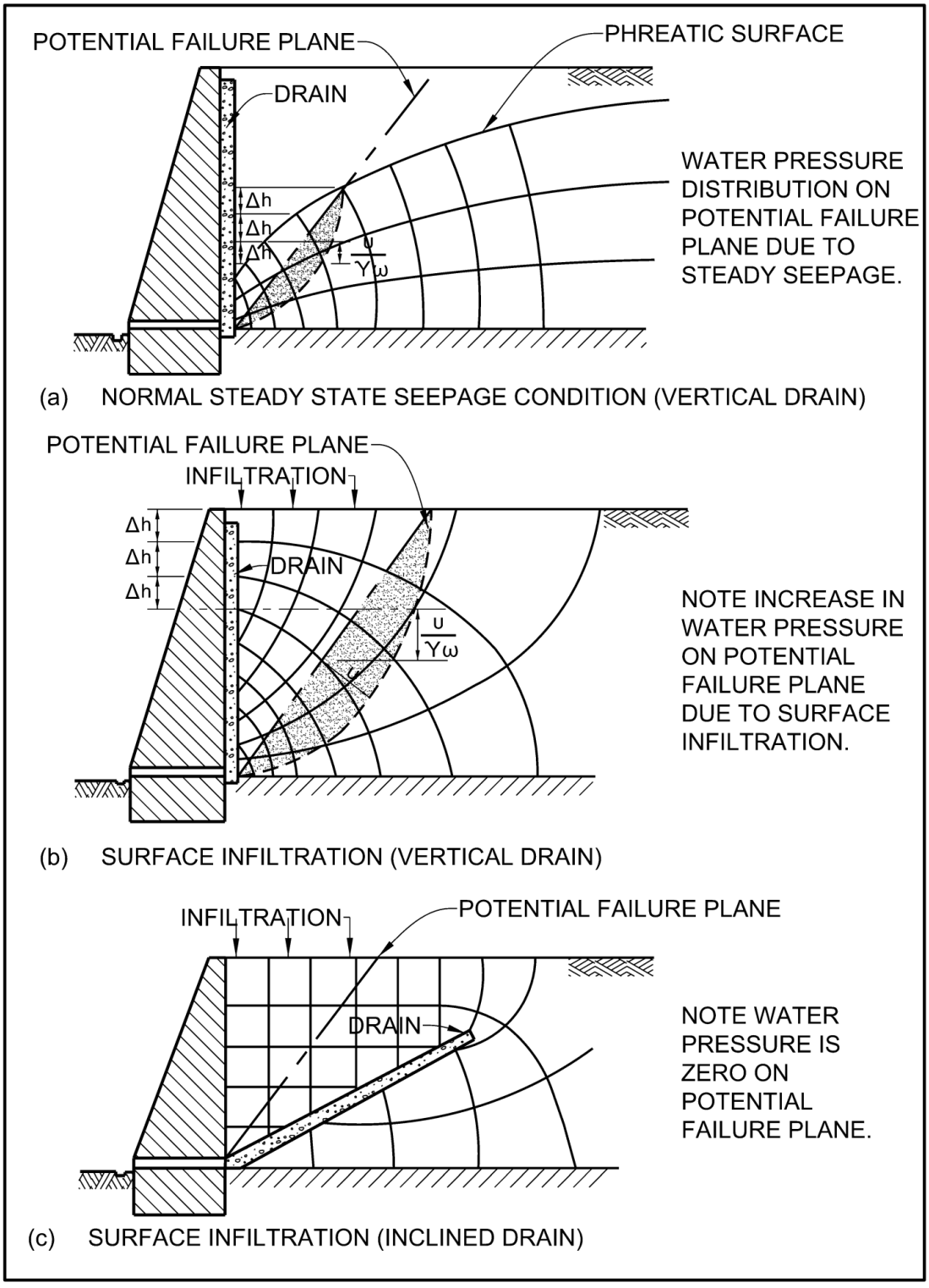

Figure 12.18. Effect of Drain Location on Excess Hydrostatic Pressures on the Failure Plane (Geotechnical Control Office, 1982)

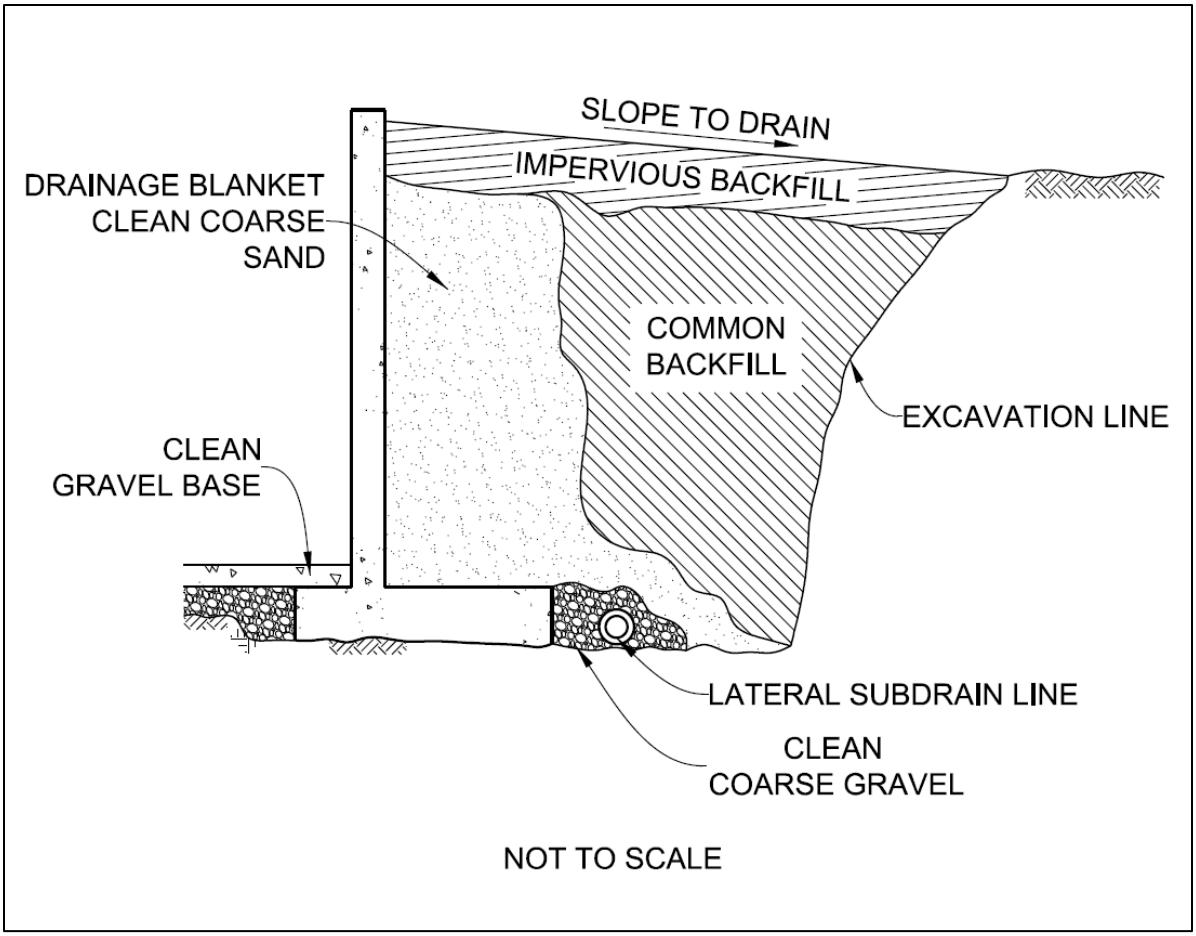

Figure 12.19. Drainage Blanket Located Adjacent to Retaining Wall (Sibley, 1967)

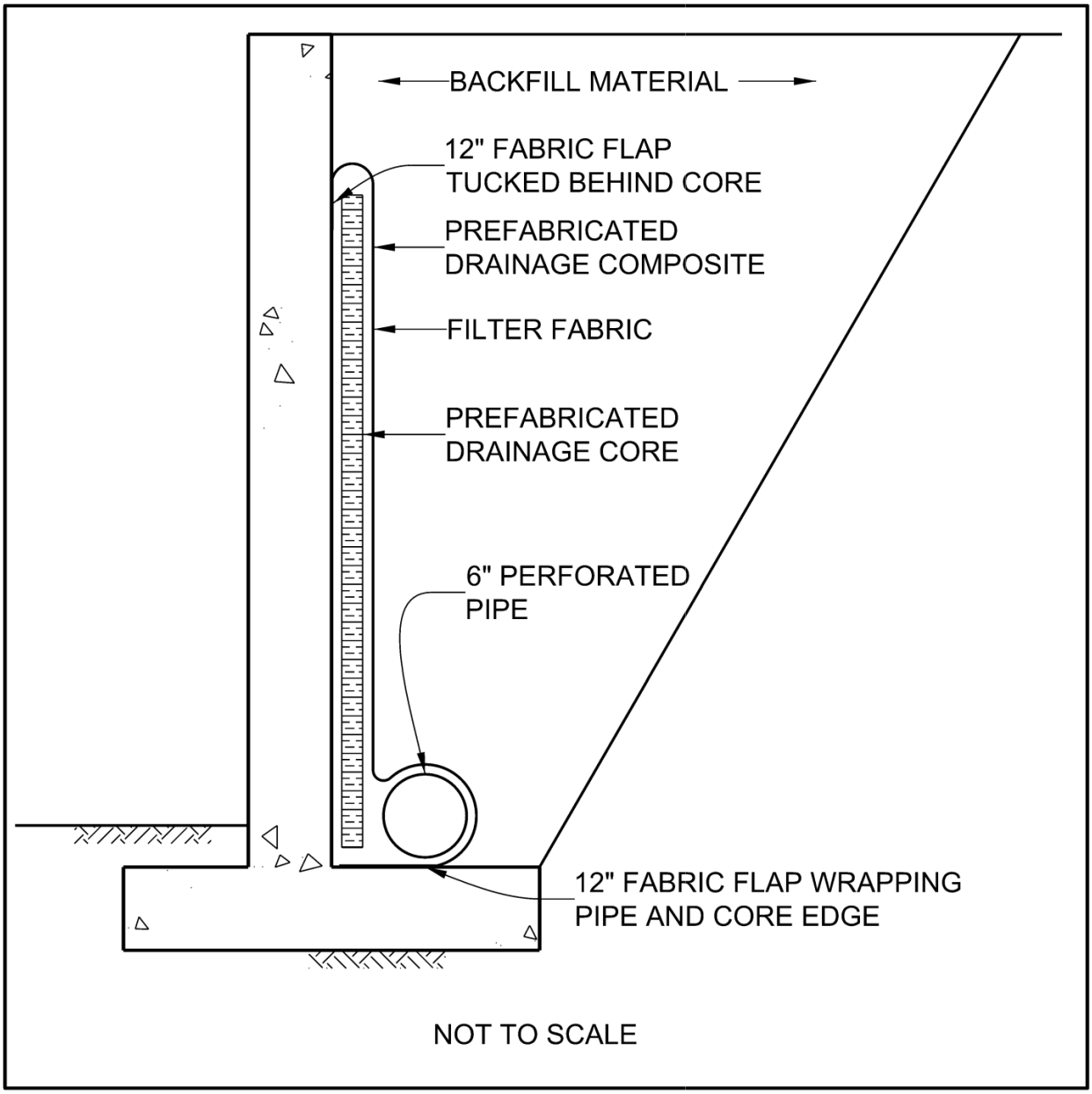

Figure 12.20. Prefabricated Drainage Composite Used as Drain Adjacent to Retaining Wall (Adapted from Carrol and Murphy, 1985)

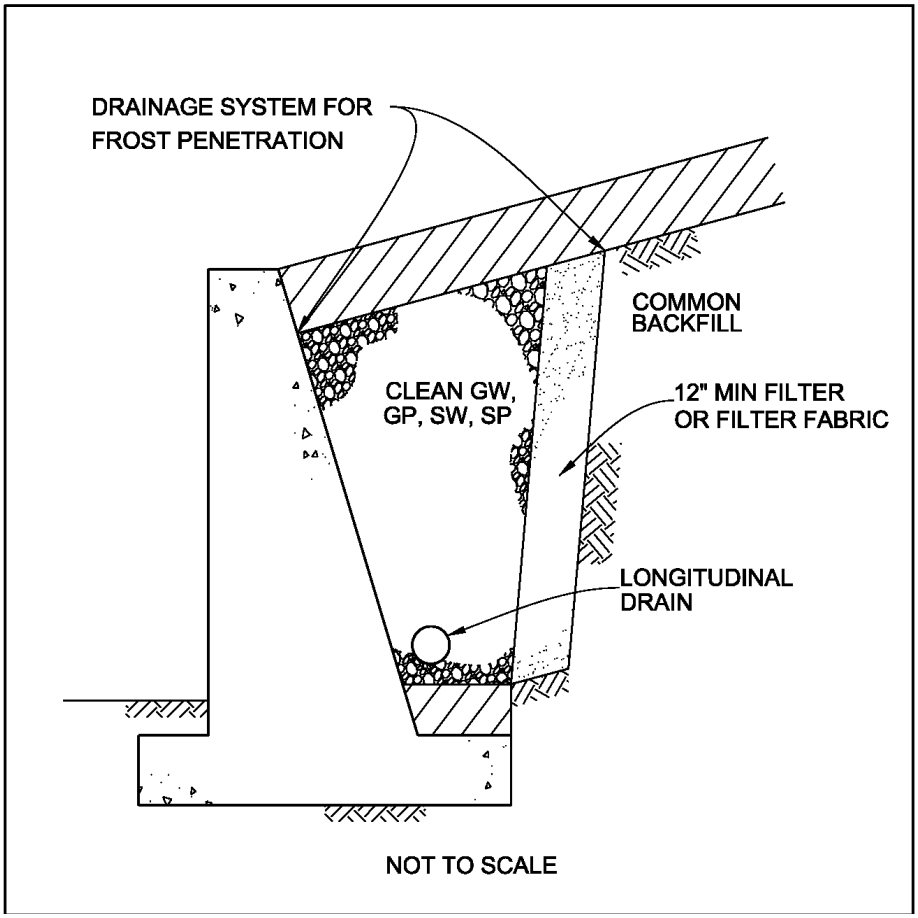

Figure 12.21. Drainage System to Prevent Frost Penetration Behind Retaining Wall (Department of the Navy, 1982)

12.8.2.7. Longitudinal Drains. Longitudinal drains within drainage blankets are used for carrying the discharge from behind the retaining wall to a ditch, manhole, or other free exit. Drains should be large enough to carry the discharge and have adequate slope to provide sufficient velocity to remove sediment from the drain. The pipe should have a minimum diameter of 6 in. (15 cm), which requires a minimum slope of approximately 0.15 percent according to Schwab et al. (1981). To minimize clogging, the drain should have perforations in the bottom half of the pipe at least 22.5 degrees below the horizontal axis. The design of drainage systems is described in section 12.8.4.

12.8.2.8. Where the operation of the drains is counted on to reduce the design loadings, manholes and/or inspection holes, as shown in Figure 12.22, should be located at sufficient intervals to facilitate inspection and cleanout. They should also be installed at sharp bends in the pipe. The terminus of the drain should have a vertical check valve as shown in Figure 12.23 to prevent back flooding. The end section of pipe supporting the check valve should be secured with a coupling band, which can be removed for inspection and cleaning of the pipe.

12.8.2.9. Weepholes.

12.8.2.9.1. Weepholes are used to provide an exit for drainage through the wall. Weepholes should consist of a pipe, at least 3 in. (7.6 cm) in diameter, extending through the stem of the wall. The weepholes may connect to lateral pipes or directly to drainage material behind the wall. They should be protected against clogging by the use of screens and/or filter fabric. The weepholes are commonly spaced not more than 10 ft. (3 m) apart vertically and horizontally. Weepholes should be located above normal water levels on the dredge side of the wall.

12.8.2.9.2. For walls that are periodically inundated above the level of the weepholes, back flow prevention devices should be provided. These devices will minimize contamination of the drainage material and the volume of water directly charging the backfill.

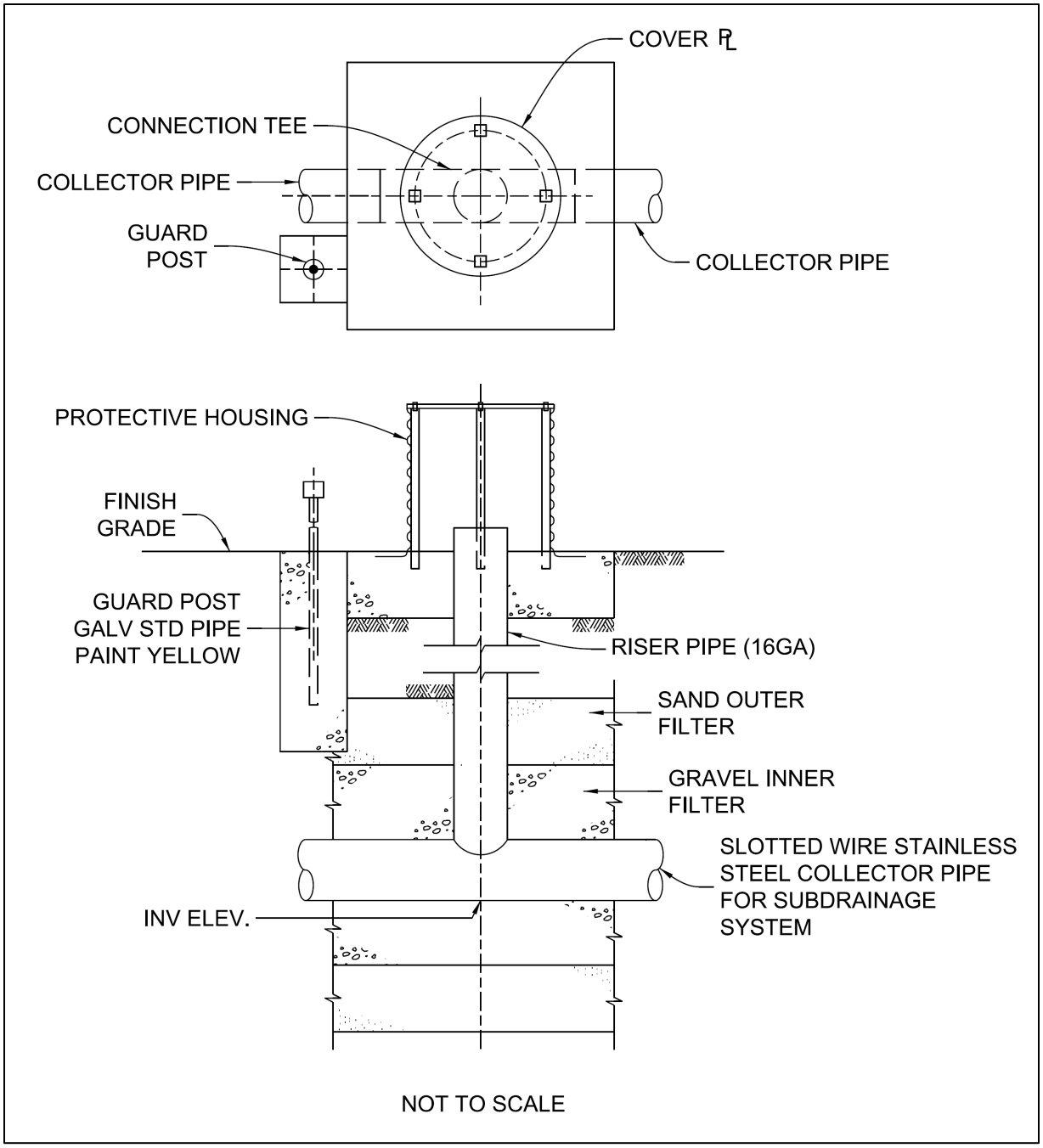

Figure 12.22. Inspection Hole for Longitudinal Drain

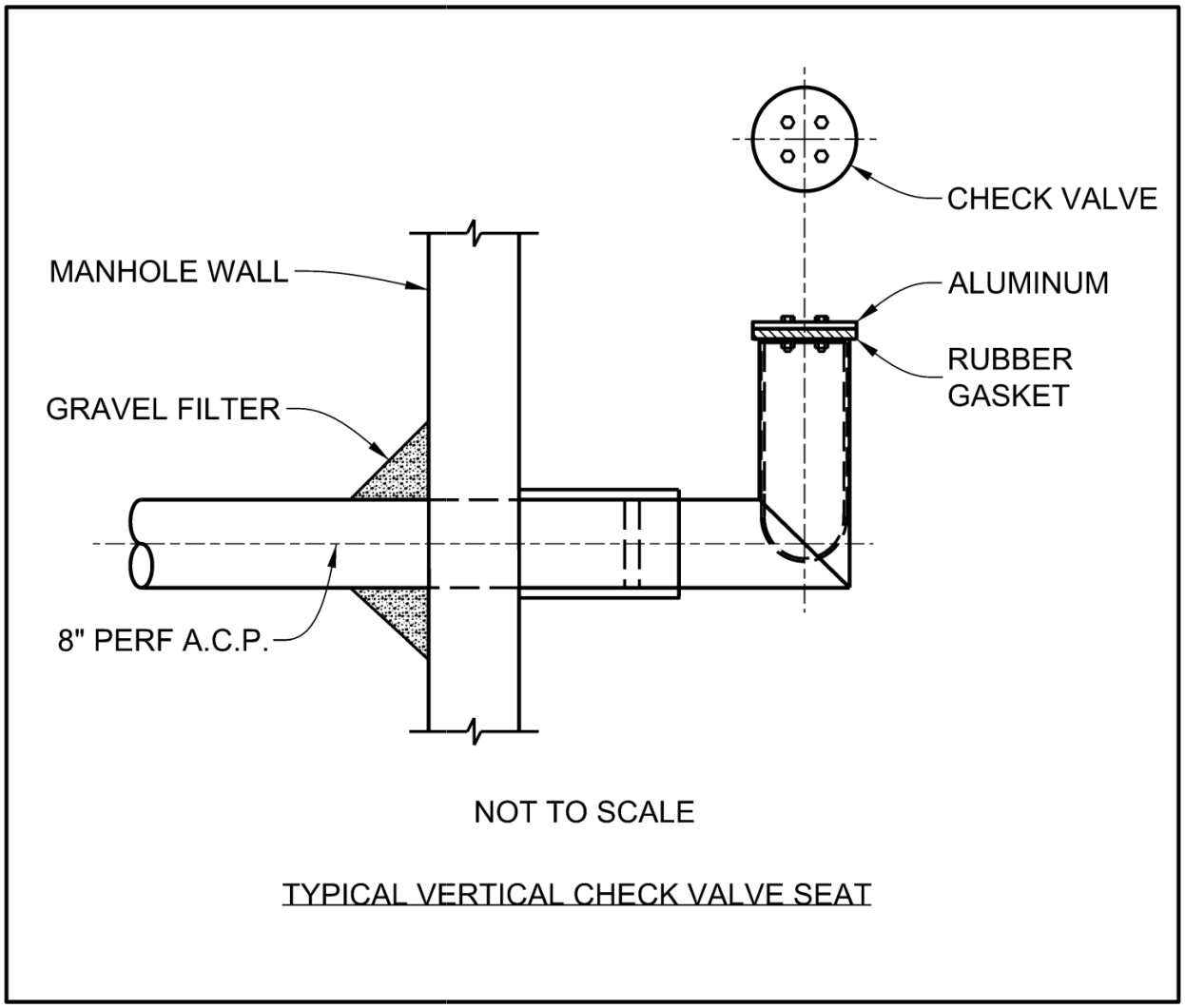

Figure 12.23. Vertical Check Valve at End of Longitudinal Drain

12.8.3. Floodwall Drainage and Seepage Control.

12.8.3.1. General Considerations. Water-retaining structures are subject to through-seepage, underseepage, and seepage around their sides or ends. Seepage control is a primary consideration in the design of water-retaining structures. Uncontrolled seepage may result in water pressures and uplift forces on the wall base in excess of design assumptions and consequent structural instability. Excessive porewater pressures in foundation materials near the landside toe of a wall may create "quick" conditions evidenced by sand boils or heaving. Emerging seepage may have sufficient velocity to move cohesionless foundation materials and erode the wall foundation (piping).

12.8.3.2. Seepage control entails the design of measures to ensure that seepage pressures and velocities are maintained below tolerable values. This will help prevent the development of wall failure modes described in Chapter 3. Inadequate seepage control may jeopardize the stability of a floodwall. Properly controlled seepage, even if quantities are large, presents no hazard. In floodwalls, control of through-seepage is provided for by waterstops (section 12.5.11). Seepage around the wall is controlled with the transition section described in section 12.2.

12.8.3.3. Since floodwalls are often built in congested areas, it is often necessary to pump seepage out of the leveed area. While the seepage quantity is often small compared to other sources, it is occasionally appropriate to consider seepage control measures for the purpose of reducing seepage quantities.

12.8.3.4. Floodwalls are usually provided with a shallow sheet pile cutoff, a toe drain, or both to control local underseepage along the floodwall base, as described in paragraph 12.8.3.6. As floodwalls are usually founded on alluvial materials, pervious zones of significant thickness are often present at some depth below relatively impervious top stratum materials. These zones may be hydraulically connected to the river. Because of the horizontal stratification of alluvial deposits, the horizontal permeability may be greatly in excess of the vertical permeability. The combination of these conditions may allow seepage to be readily conducted landward beneath the floodwall. Where floodwalls are underlain by such pervious strata (the usual case), analysis may indicate the need for underseepage controls in addition to the toe drain and/or cutoff.

12.8.3.5. During high-water events, it is important to inspect the backfill and monitor performance for flow, turbid seepage, and sediment accumulation. Drains provide a means for quantitative measurement of seepage to aid in observation/analysis of seepage-related behavior. Flow out of drains should be clear (no transported sediments); the presence of sediment would indicate potential loss of backfill or foundation soil. Where flows may be large, a flow measuring device, such as a weir or flume, and a sediment trap upstream of the measurement device facilitate performance monitoring. These features may be included at the discharge end of the drain or more locations along the drain alignment.

12.8.3.6. Underseepage Control. The focus of underseepage control is to either reduce uplift pressures acting on the base of the wall described in section 6.6 or prevent the internal erosion of foundation soils beneath the wall described in section 7.7. Underseepage control measures vary because the selection and design of an appropriate control scheme is highly dependent on site-specific conditions. Conditions to consider include the stratification and permeability of foundation materials, availability of right-of-way, and local construction practices and costs. Flow nets and/or finite element seepage analyses used to evaluate uplift or internal erosion can be modified to include the various types of underseepage controls. Underseepage control features are described in the following paragraphs.

12.8.3.7. Cutoffs. Cutoffs include various types of excavated trench backfilled with impervious compacted earth, a slurry trench, an extension of a concrete shear key, or a sheet pile wall. Considerations for cutoffs:

12.8.3.7.1. For some foundation conditions, cutoffs that penetrate 90 percent of the pervious strata do not significantly reduce the quantity of flow. However, partial cutoffs can be somewhat effective in reducing uplift pressures on the wall base.

12.8.3.7.2. Deep cutoffs will often interfere with the normal exchange of groundwater between an aquifer and a river during non-flood periods. They should only be considered where detailed hydrogeologic studies have been made in this regard.

12.8.3.7.3. A cutoff located near the landside increases uplift beneath the wall. However, it may be effective for preventing the internal erosion of foundation soils beneath the base of the wall or confining layer.

12.8.3.7.4. A cutoff located near the waterside reduces uplift beneath the wall. A steel sheet pile cutoff is not entirely watertight due to leakage at the interlocks but can reduce the possibility of piping of coarse-grained material in the foundation. Hydrophilic joint sealant should be considered in applications where sheet pile is used as a cutoff.

12.8.3.7.5. A sheet pile cutoff is less effective in fine-grained material than in coarse-grained material because cohesion may allow cracking and separation of the soil away from the sheet pile.

12.8.3.7.6. A sheet pile cutoff is a typical part of design for deep-founded walls due to the expected settlement of soils between load-carrying piles. The bearing capacity of steel sheet piling should be neglected.

12.8.3.7.7. The decision as to the type, location, and depth of a cutoff is based on the intended purpose of the cutoff and the actual site conditions. Flow nets and/or finite element seepage analyses should be used to design the cutoff.

12.8.3.8. Toe Drains. Inland floodwalls typically include a landside toe drain, similar to that shown in Figure 12.24, to intercept nuisance seepage between monoliths and small amounts of seepage beneath the wall to prevent the buildup of pressure and formation of sand boils landside of the wall. Coastal floodwalls and other walls subjected to very short flood events should be analyzed to determine if such drains are needed. The toe drain, which runs parallel to the wall at the landside edge of the footing, provides a positive outlet for local underseepage and a check for controlling piping and/or excessive uplift pressure beneath the base slab. Considerations for toe drains:

12.8.3.8.1. For walls on impervious foundations, the toe drain may be adequate to control all underseepage.

12.8.3.8.2. For walls on pervious foundations, additional seepage control measures will usually be required.

12.8.3.8.3. In the case of walls with deep foundations, a properly designed toe drain would also protect against “roofing,” the loss of material from beneath the wall base. In cases where a toe drain is not used to intercept underseepage, it may be prudent to assume that foundation piles landside of a cutoff have an unsupported length due to “roofing.”

12.8.3.8.4. The drain should never be located under the wall footing, in order to allow maintenance access and to avoid crushing the drain.

12.8.3.8.5. Where large volumes of seepage are not expected, typical toe drain design will consist of a 6- to 8-in. (15 to 20 cm) diameter pipe perforated on the bottom half and surrounded in all directions with 12 in. (32 cm) of filter material designed by the filter criteria in section 12.8.4. The collected water is usually disposed of by gravity outlets into ditches, ponding areas, or pump stations.

12.8.3.8.6. The toe drain system should provide access for inspection and maintenance at changes in alignment and at intervals not to exceed 500 ft. (150 m).

12.8.3.8.7. Discharge pipes should be provided with check valves that will prevent the entrance of surface water.

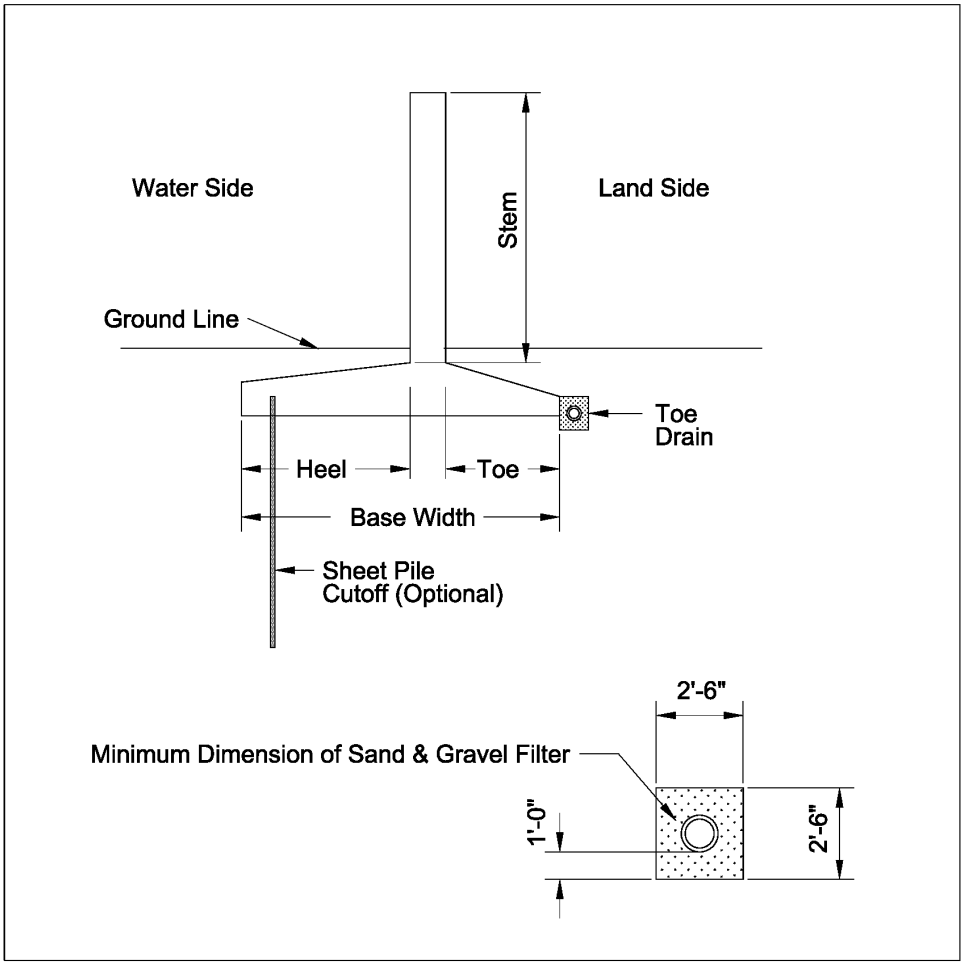

Figure 12.24. Toe Drain for T-Type Floodwall with Horizontal Base

12.8.3.9. Trench Drains. Where the impervious top stratum is thin or nonexistent, a trench drain may be used to control underseepage in the vicinity of the floodwall toe. A trench drain is an enlarged variation of a toe drain. It extends from the ground surface through shallow pervious layers or into a pervious layer underlying a shallow surface blanket.

12.8.3.9.1. The practical depth for construction of a trench drain depends on available excavation equipment and site dewatering requirements. The excavation, pipe placement, and backfilling of the trench should always be performed in the dry. Backfill in a trench drain should conform to the filter criteria in section 12.8.4.

12.8.3.9.2. To assure adequate capacity, the collector pipe should be sized considerably larger than computations indicate are necessary. Note the minimum 6″ diameter in 12.8.2.7 and filter requirements in 12.8.4.4.

12.8.3.9.3. A trench drain should be provided with inspection and maintenance access and backflow protection as described for toe drains.

12.8.3.9.4. The seepage calculations for the quantity of flow should assume the tailwater elevation equal to that of the discharge of the trench drain. However, if water can pond on the landside of the wall, the calculations for uplift pressure should check whether a more critical uplift condition can occur for the ponded case.

12.8.3.10. Relief Wells. Pressure relief wells are used to reduce uplift pressures at depths in pervious layers which might otherwise cause sand boils and piping of foundation materials. Wells function as a drain, relieving pressure by discharging water, but retaining materials with a screen and filter. Wells are advantageous where pervious strata are relatively thick or relatively deep. They are particularly useful in controlling large quantities of seepage in strata of pervious material having direct connections with the river. Another advantage of relief wells is the ease with which they can be constructed if piezometric pressures measured during high water indicate the need for additional underseepage control. Considerations for relief wells:

12.8.3.10.1. Design of relief well systems is described in EM 1110-2-1901, EM 1110-2-1913, and EM 1110-2-1914. The design entails selecting a spacing, size, and penetration for a line of wells that will result in acceptable gradients at points midway between the line of wells and at the floodwall toe.

12.8.3.10.2. Relief wells are usually not very effective in intercepting near-surface seepage. It is often wise to use them in combination with typical wall seepage control measures such as cutoffs and toe drains.

12.8.3.10.3. Relief wells should be pump-tested when installed, and require continued inspection and maintenance, as described in Chapter 15.

12.8.3.11. Riverside Impervious Blankets. Impervious riverside blankets (natural or constructed) overlying a pervious foundation are effective in reducing the quantity of seepage and to some extent are effective in reducing uplift pressures and gradients landside of the floodwall. Their effects may be analyzed using seepage analysis methods found in EM 1110-2-1901 and EM 1110-2-1913. Riverside blankets may be constructed over thin natural impervious blankets to improve the effects of the natural blankets or they may be constructed directly on pervious material. Considerations for riverside impervious blankets.

12.8.3.11.1. Excessively steep riverbanks may make blanket construction impractical.

12.8.3.11.2. It is seldom feasible to construct blankets over exposed portions of the pervious layer under water.

12.8.3.11.3. A noncontinuous blanket has serious drawbacks, as only a small area of pervious stratum left exposed may reduce the blanket’s effectiveness.

12.8.3.11.4. Riverside impervious blankets need to overlap the riverside base of the floodwall. This will minimize the potential for rupture of the blanket by landward deflection of the floodwall when loaded.

12.8.3.11.5. Riverside impervious blankets may be subject to scour at high river stages when they would be most needed or may crack open if not continuously wet. To prevent such action, blankets should be protected immediately after construction. A well-designed and well-planted vegetative cover is ordinarily sufficient along straight reaches. Along outside curves of the river, the blankets should be protected with riprap or other positive protection.

12.8.3.12. Landside Seepage Berms. Landside seepage berms function by providing an increased landside top blanket thickness, thereby reducing the gradient. The berm also extends the seepage path by forcing the seepage exit landward. Seepage berms are typically 100 to 300 ft. (30 to 90 m) wide. As floodwalls are usually built in areas where right-of-way cost or availability is insufficient for levee construction, seepage berms are rarely used in conjunction with floodwalls. Procedures for seepage berm design are presented in EM 1110-2-1913.

12.8.3.13. Grouting of Open Rock Joints. In cases where rock is shallow enough that floodwalls can be founded directly on the rock, close examination of the rock surface is necessary to determine if open joints are present. Such joints can be detrimental to underseepage control and should be cleaned out and filled with grout before the concrete base is placed. If the possibility exists for seepage flow through porous or cavernous rock in the foundation, consideration should be given to installing a grout curtain.

12.8.4. Drain Requirements.

12.8.4.1. General. The drain should be able to carry the design flow freely without movement of soil particles. The terms filter and drain are sometimes used interchangeably. However, it is critically important these features have adequate discharge capacity to collect seepage and conduct it to a discharge point or area. If a collector pipe is used, the filter material may satisfy the criteria for stability and permeability. However, it may be too fine to meet the criteria for circular or slotted openings. Should this happen, multilayered or graded filters are required.

12.8.4.2. The pipe should be surrounded by a minimum 1-foot thickness of drain rock. The rock should have a gradation designed to provide a stable transition between the filter backfill and the perforations or slots in the pipe. A coarser drainage material embedded within a finer filter material is termed a two-stage filter. It is more robust than a single-stage filter. The number of stages in a multi-stage design is dependent on soil type, expected flow, foundation conditions, risk level, and drain geometry. The pipe should be a minimum of 6 in. in diameter. In some instances, a larger pipe may be required for proper operation and maintenance.

12.8.4.3. Drainage blankets may be constructed of clean sand and gravel or a prefabricated drainage composite (for certain applications). It may be possible to substitute geotextile for one or more of the granular filters in a multilayered filter system. It should be recognized that geotextiles are prone to clogging due to the variability of foundation soils. Collection efficiency can reduce over time and maintenance or periodic replacement is required. Geotextiles used as filters will conform to the requirements of guide specification UFGS 31 05 22.

12.8.4.4. Filter Requirements. Drains should be adequately protected by filter layers so that seepage water is admitted freely but movement of the soil backfill into the drain will not occur. The piping or stability criterion is based on the grain size relationship between the protected soil and the filter. Drains are designed as a filter material according to criteria given in EM 1110-2-1901 and Federal Emergency Management Agency (FEMA) (2011), including the requirement to have adequate discharge capacity. The design flow can be determined from advanced seepage analysis as discussed in Chapter 16 and described in detail in EM 1110-2-1901 and EM 1110-2-1913.

12.8.4.5. Seepage in coarse aggregates may be turbulent. The reduction factor in Figure 12.25 should be applied to the hydraulic conductivity value for this aggregate for use in seepage analyses. The in-place permeability should be at least 20 times that calculated theoretically. For prefabricated drainage composites the in-plane permeability will decrease with increase in lateral pressure. Therefore, the in-plane permeability should be taken at the maximum lateral earth pressure acting on the wall.

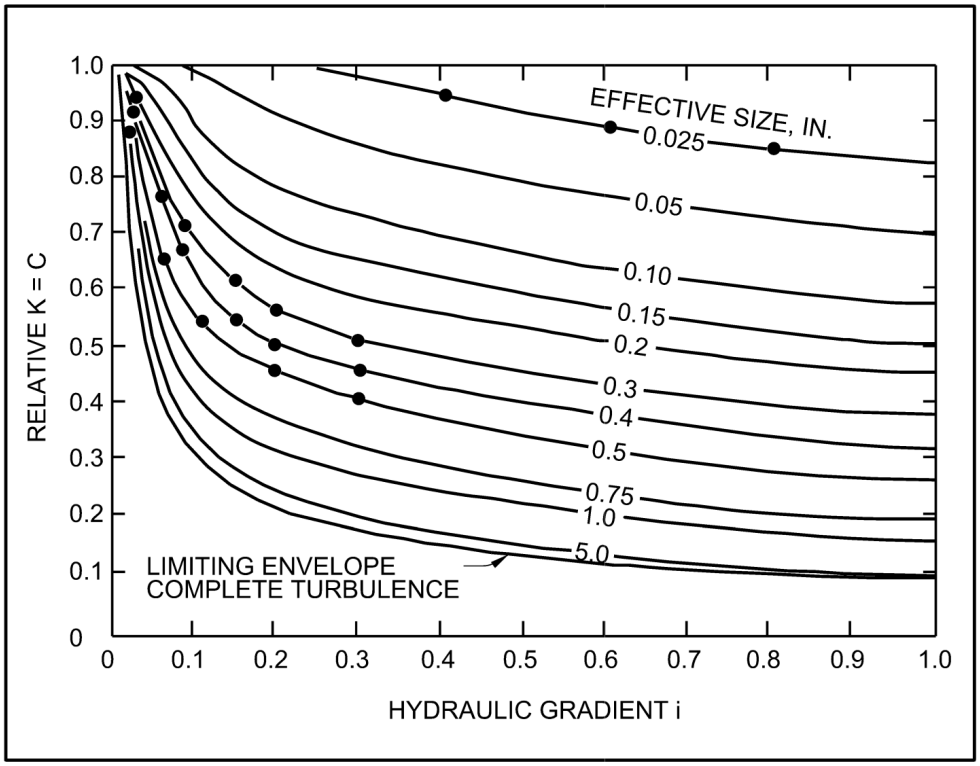

Figure 12.25. Approximation for Estimating Reduction in Permeability of Narrow Size-Ranged Aggregate Caused by Turbulent Flow (Redrawn from Cedergren, 1967)

12.9. Ground Improvement.

12.9.1. Ground improvement involves the modification of soil properties or constructing inclusions within the soil to achieve a required performance. Common Uses:

12.9.1.1. Increase bearing capacity;

12.9.1.2. Reduce settlement and permeability;

12.9.1.3. Mitigate liquefaction;

12.9.1.4. Increase slope stability;

12.9.1.5. Collapse/fill voids, stabilize mines/karst;

12.9.1.6. Accelerate settlement;

12.9.1.7. Treat expansive soils; and

12.9.1.8. Stabilize soft ground.

12.9.2. The mechanism of achieving ground improvement varies by technique and soil conditions. Densification by means of vibration or displacement is an effective means of improving granular soils. Reinforcement involves constructing or inserting stiff elements within a soil mass to create an improved composite material. Soil can be improved by adding cementitious materials by either permeation in granular soils or mixing in all soil types.

12.9.3. Voids can cause overlying structures to settle. Compaction grouting, cement grouting, polyurethane grouting, and other specialized grouting techniques permanently fill voids. One method to successfully build on soft soil deposits is to use surcharge/preloading to pre-treat the soil prior to construction. The insertion of vertical drains decreases the amount of time it takes soils to settle and strengthen when subjected to a surcharge load.

12.9.4. Heave due to expansive clay soils is a common problem in some areas of the U.S. Injection systems treat expansive clays beneath buildings and landfills with the pressure injection of an aqueous solution of water, hydrated lime or lime/fly ash slurry, or potassium chloride. Water injection pre-swells expansive clays prior to construction. Lime injection fills the desiccation pattern of expansive clay with slurry and stabilizes the surface of the pad for workability. Lime/fly ash injection improves low-strength soils to improve bearing capacity and/or trafficability. Hydrated lime may also be mixed on site with in situ soils.

12.9.5. Potassium chloride injection arrests heave occurring beneath existing structures by limiting the amount of water underlying clays can absorb. Hydrofracture of the soil will occur during injection. This must be addressed during design and construction, in particular where this approach is taken beneath an existing structure.

12.9.6. Unsuitable Foundation Material and Bank Stability. Foundation material found to be unsuitable may be avoided by a change in alignment. Alternately it may be removed and replaced with suitable earth fill as shown in Figure 12.26. The limits of removal and replacement may need to extend horizontally beyond the width of the footing as shown in Figure 12.26 based on wall dimensions and foundation conditions. The wall may also be founded on piles or drilled shafts through the unsuitable material. In some cases, the removal of unsuitable foundation material involves the removal of or cutting into the existing site on which the wall is to be placed.

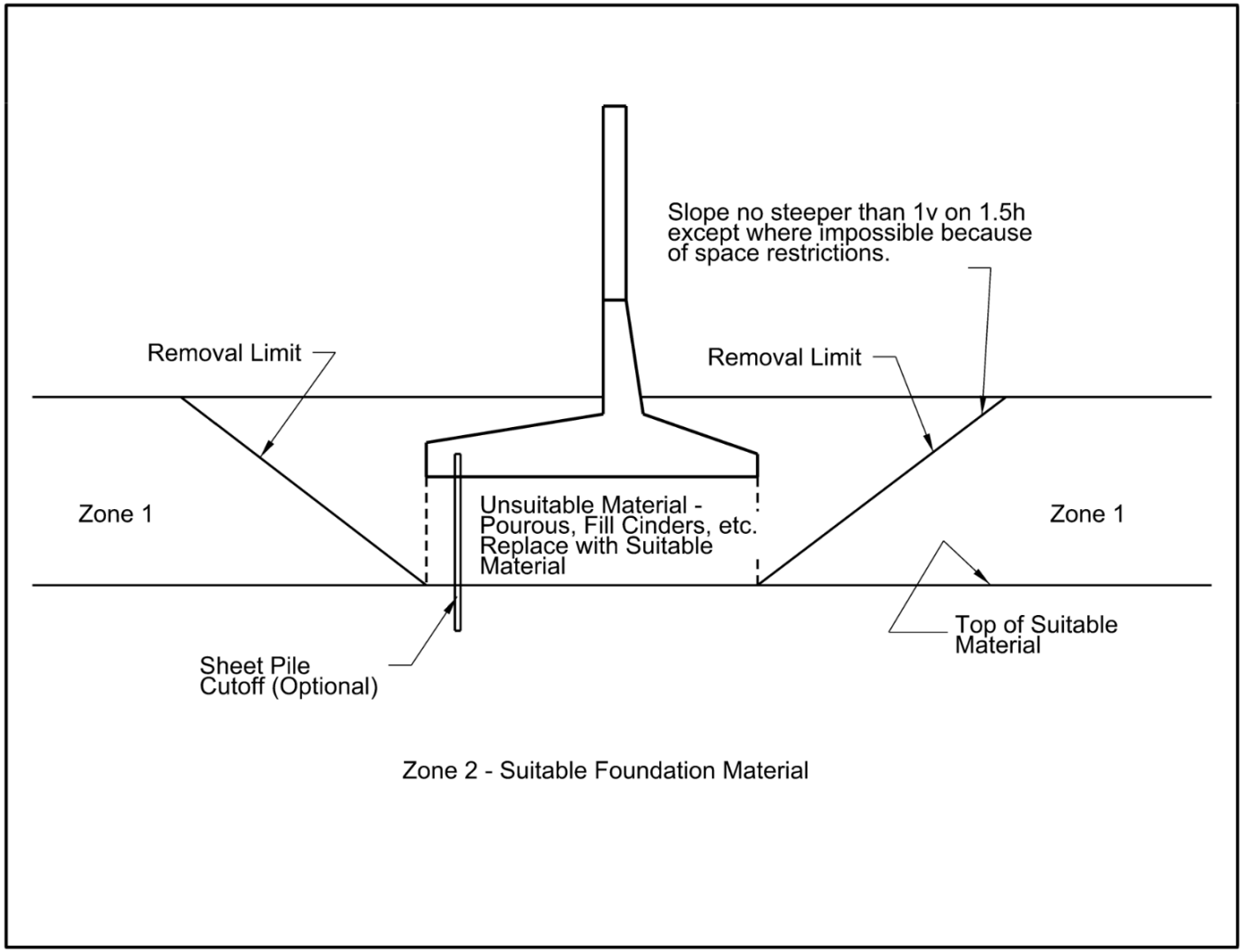

Figure 12.26. Removal Limits of Unsuitable Foundation Material

12.9.7. Removal and Replacement. Careful attention should be paid to the outlining and removal of unsatisfactory material and to the selection of suitable replacement material. New material should be obtained, placed, and compacted to provide adequate support for the floodwall. Replacement material should undergo the same types of laboratory testing as existing foundation material. Placement and compaction techniques should be according to earth dam and levee requirements.

12.9.8. Slopes. Slopes steeper than 1.0V on 1.5H and areas that require hand compaction should be minimized. Slopes on which there is evidence of past instability, or in which fill is a component, should be investigated for stability. Riverward slopes should be checked for stability if the failure of the bank would jeopardize the stability of the wall.

12.9.9. Right-of-Way. In some cases, the right-of-way for a floodwall may be so restricted and confining that the wall may have to be placed near the top edge of the bank or even riverward of the bank. In those cases, fill placed riverward of the top bank is permitted if proper precautionary measures are taken such as review by hydraulic and hydrologic engineers.

12.9.10. PFMA. When ground improvement is used for wall projects, a PFMA should be completed to assess failure modes that may be created as a result of the ground improvement. This PFMA would be completed during design and re-assessed during construction.

12.10. Utilities, Conduits, and Pipe Crossings.

12.10.1. General. The purpose of this section is to provide the engineer with guidance when faced with a utility, conduit, or pipe passing through a wall, herein referred to as crossing. For crossings that do not penetrate the structural portions of a wall, refer to EM 1110-2-2902. EM 1110-2-2902 also covers requirements for the pipe.

12.10.2. Location of Crossing. There are three vertical levels where a crossing occurs. The levels are overhead, near grade, and below grade as shown in Figure 12.27. The horizontal location of a crossing is only important when crossing near grade and should occur away from the wall joints. The edge distance should be sufficient such that the wall stem can support the design loads. Refer to section 12.10.5 for addition information on near grade crossings. Each crossing level is paired with a construction scenario further described in the next section.

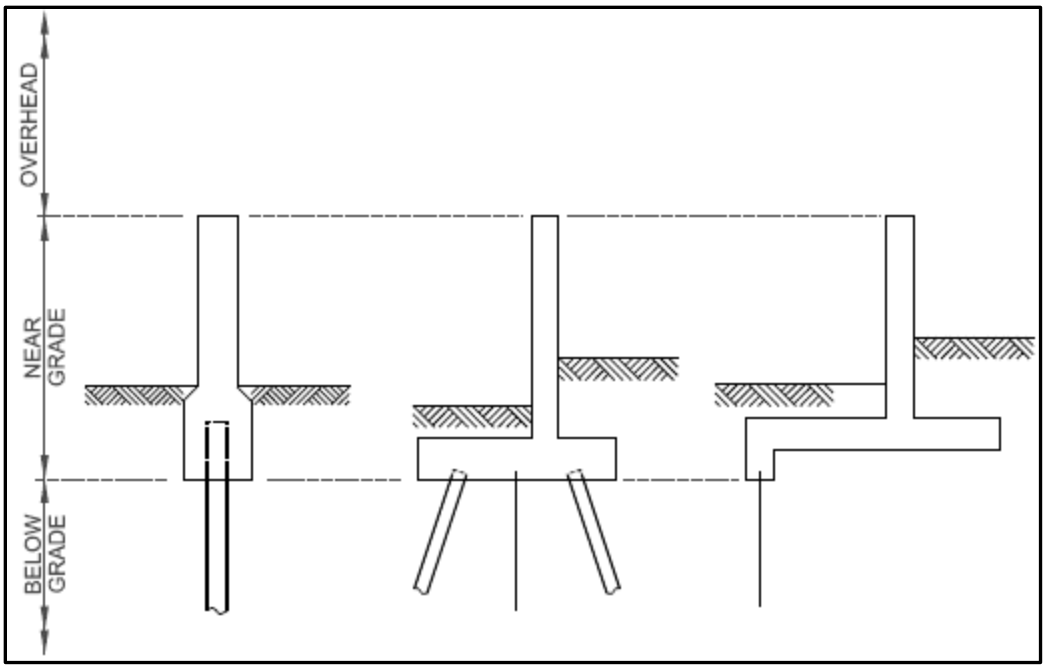

Figure 12.27. Delineation of Crossing Location

12.10.3. Construction Scenarios. There are three construction scenarios in which a crossing occurs.

12.10.3.1. The first scenario is where a new wall and a new crossing are being constructed. This scenario gives the engineer the most flexibility on where to place the crossing.

12.10.3.2. The second scenario is a new wall and an existing crossing. Under this scenario, the depth of the crossing will determine whether to design for below grade or near grade.

12.10.3.3. The last construction scenario is an existing wall and a new crossing. Typically for this type of scenario, the recommended crossing level is overhead. Under special circumstances, the crossing may occur below grade or near grade. This is true for gravity type crossings.

12.10.3.4. These three construction scenarios are paired up with the vertical locations as shown in Table 12.2. "R" denotes recommended, "NR" not recommended, and "S" situational. With near grade construction, special care should be taken when deciding to core through the wall. For below grade construction, special care should be taken so to not undermine the existing wall. Refer to the subsequent sections for additional information.

Table 12.2
Likelihood of Various Utility Scenarios

		Construction Scenario		
		New Wall/New Crossing*	New Wall/Ex. Crossing*	Ex. Wall/New Crossing
Crossing Type	Below Grade	R	R	S
	Near Grade	S	R	S
	Overhead	NR	NR	R
*Cable banks are more likely to go over the wall than other types of penetrations and are more commonly overhead.				

12.10.4. Below Grade Crossings. A below grade crossing is typically through the wall's cutoff barrier, below the wall base, or through an I-wall sheet pile foundation. The following sections provide guidance for each of the below grade crossing types.

12.10.4.1. Pipe Penetration Through Cutoff Barrier. Underground utility crossings through the floodwall's cutoff barrier typically occurs on floodwalls supported by deep foundations. The penetration is typically designed to include a casing pipe. Refer to EM 1110-2-2902 for additional guidance on penetration details. Several factors should be considered when designing a below grade penetration. They are as follows:

12.10.4.1.1. Construction Scenario. New wall over existing pipe may require a load frame and hydraulic jack to install sheet pile under the pipe as shown in Figure 12.28. A new pipe through an existing wall will require cutting through the cutoff barrier or through the I-wall sheet pile foundation.

12.10.4.1.2. Differential Movement. This can occur during a loading event or from long term settlement under deep-founded walls. When expected, the engineer must design the penetration to permit this differential movement to include enough annular space between the carrier pipe and casing pipe. See EM 1110-2-2902 for details.

12.10.4.1.3. Depth of Penetration. The design of the floodwall will be such that the base of the floodwall is above the underground utility with enough clear distance so that an adequate penetration casing can be provided. Otherwise, the designer will consider lowering the base such that the penetration occurs through the stem. Penetrations through the base should be avoided. If the existing utility crossing falls within the bottom third of the cutoff barrier it is acceptable to stop the cutoff wall just short of the top of the utility. If the cutoff wall tip is based on seepage, additional analysis will be required for potential internal erosion issues along the utility.

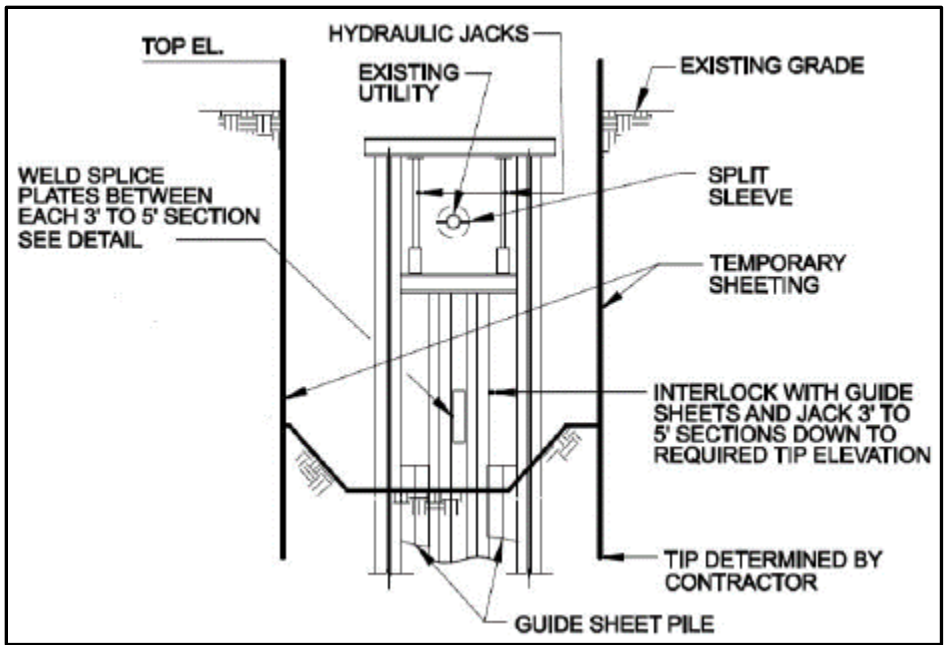

Figure 12.28. Load Frame and Hydraulic Jack to Press-In the Sheet Pile Under the Utility

12.10.4.2. Under Base of Shallow-Founded Floodwalls.

12.10.4.2.1. When new floodwalls are being constructed over an existing utility, the crossing underneath the floodwall base is evaluated and strengthened (cased) according to EM 1110-2-2902. The clear distance between the base of the floodwall and top of pipe should be enough to accommodate a casing with adequate cover. If the base cannot be positioned above the utility appropriately, then the designer should consider a near grade crossing with the utility penetrating through the floodwall stem. If this also poses a challenge, the utility should be relocated to pass up and over the wall.

12.10.4.2.2. When constructing a below grade crossing under an existing soil founded wall, with or without a cutoff, use directional boring to the fullest extent possible. Avoid excavation directly under the wall. In either scenario, extend the casing beyond the wall base according to EM 1110-2-2902.

12.10.4.3. Through I-Wall Sheet Pile Foundation. Regardless of the construction scenario, underground utilities crossing through the I-wall sheet pile foundation will follow the guidance outlined in section 12.10.5.1 and herein. If the utility falls within the bottom third of the sheet pile foundation, the designer may elect to stop the sheet pile just short from the top of the utility. Seepage and internal erosion needs to be checked and the foundation designed to accommodate this penetration. This may require deeper and stiffer sheet pile sections adjacent to the penetration. It may also require special measures, such as grouting, where there are internal erosion concerns.

12.10.5. Near Grade Crossing.

12.10.5.1. New Walls. A near grade crossing occurs within the concrete structure just below the finish grade or near the top of the structure, as long as there is enough room for vehicular traffic below the pipe. Near grade crossings should be avoided in new construction. However, if there is an existing utility that cannot be relocated, then the penetration should occur within the floodwall stem or above the I-wall sheet pile/concrete cap connection. Sufficient distance must be provided from the monolith edge or joint, typically one pipe diameter or larger. When designing the floodwall, be sure to position the base and joint to satisfy this requirement. Strength and serviceability requirements will be according to EM 1110-2-2104. There are two methods that can be utilized when designing the penetration.

12.10.5.1.1. One method is to embed a casing pipe within the stem. Use hoop reinforcement around the casing pipe since the concrete will be cast against it. Ensure enough primary reinforcement is provided adjacent and above to the penetration.

12.10.5.1.2. The other method is to design a blockout where no reinforcement is within the blockout section, Figure 12.29. The face of the wall is scored outlining the blockout edge. When the casing pipe and carrier pipe are ready to be installed, the blockout is removed and the void spaces are filled. The casing pipe can be attached to the wall stem using a fabricated frame welded to the casing pipe and anchored to the wall stem and base using adhesive anchors. Alternatively, a reinforced concrete collar is attached around the casing pipe on both faces of the wall and bonded. Provide corner bars on both faces of the wall stem for crack control. Ensure adequate primary reinforcement is provided adjacent to the opening. When removing the blockout, core the corners.

12.10.5.2. Existing Walls. Pipes may be installed through existing walls either by partial removal and replacement of the wall concrete, coring a hole through the wall, or using hydrodemolition to remove the concrete without cutting the reinforcement. Prior to concrete placement to rebuild the removed wall, re-establish the continuity of the cut reinforcing steel by installing lapped or mechanically spliced bars. Sufficient existing concrete is removed around the existing bars on both sides of the slot to accommodate either the lap or mechanical splice, according to ACI 318. Lap length is determined according to ACI 318 requirements. Use of mechanical splices is best practice, as they minimize concrete removal. Each cut bar outside the pipe diameter should be reconnected. Additional bars are doweled adjacent to the penetration and satisfy the strength requirements of EM 1110-2-2104. The spliced bars and dowels are the same size as the cut bars.

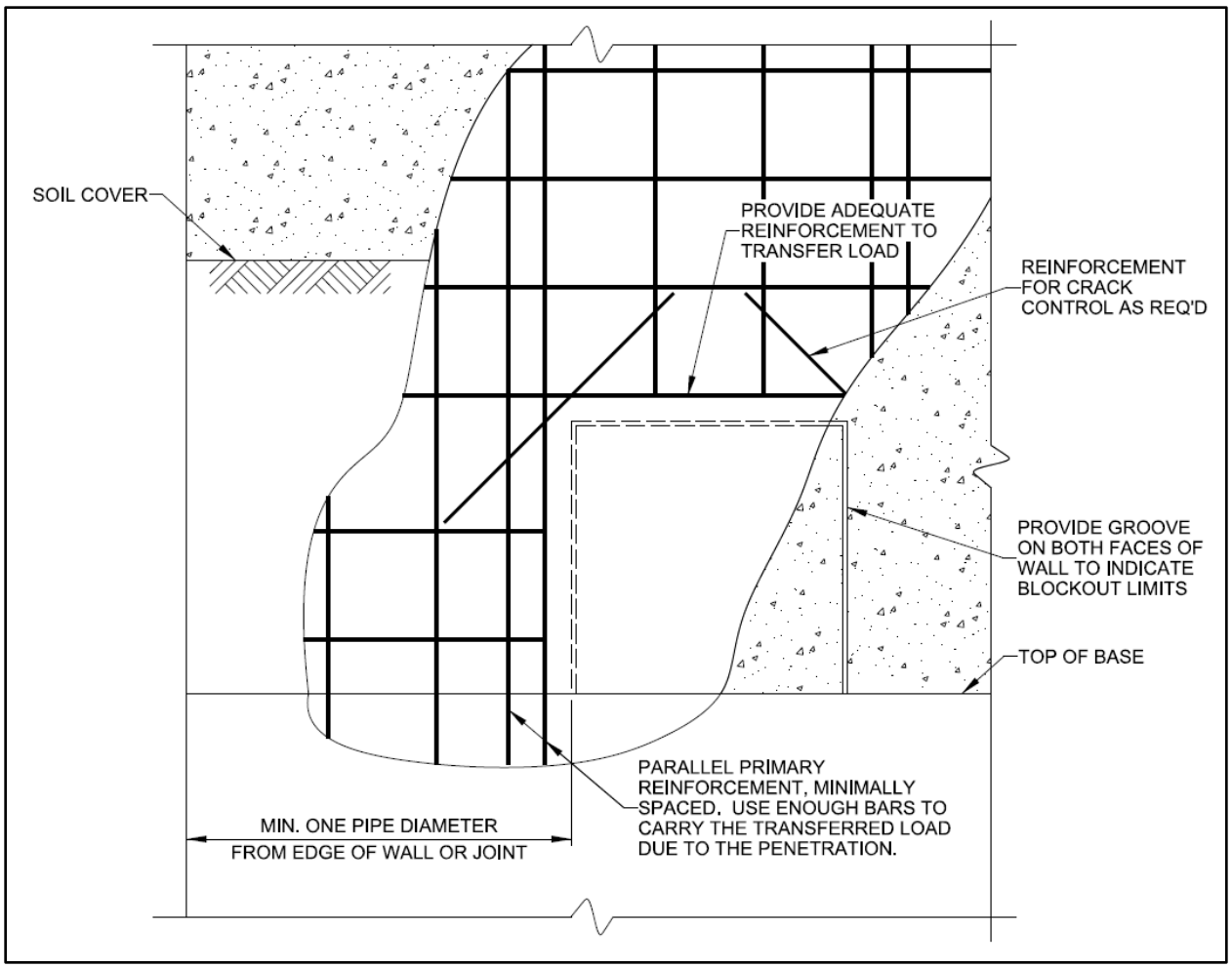

Figure 12.29. Blockout Detail

12.10.6. Overhead Crossing. This type of crossing is common for new utility installation, typically pressurized pipes, telecommunications, and electric. The overhead crossing needs to have adequate clearance to allow for emergency vehicles to pass underneath. If the overhead crossing occurs over a floodwall within a levee section, design the crossing to satisfy the requirements of EM 1110-2-1913.

12.10.7. Future Planned Utilities. If it is discovered that a utility crossing is planned for the future, the designer may accommodate this planned utility several ways. For an anticipated overhead crossing, the floodwall can be designed to support the vertical and thrust loads of the utility. For future below grade crossings, follow the guidance in section 12.10.4. If the utility is to be a gravity line, the engineer may design the floodwall such that the base falls below the anticipated bottom of pipe. A block-out is provided in the wall stem. The perimeter of the block-out is marked by a cast-in-place groove on each face of the wall. Alternatively, the designer may provide an embedded casing for the utility to pass through ensuring the casing has removable caps on both ends.

12.11. Railroad and Roadway Crossings.

12.11.1. Railroad Crossings. It is important to involve the railroad as early as possible in the planning and design process. Utilizing general guidelines from AREMA may not be sufficient enough to satisfy local requirements.

12.11.2. One key element impacting design is site-specific railroad operation. During design reviews, it may be necessary to provide construction phasing plans highlighting sequencing and track down time. Other common requirements consist of, but are not limited to, crossing perpendicular to the tracks, locating the tops of foundations below the ballast and sub-ballast material, and limiting the width of the sill so that it fits within the clear distance between railroad ties. Other items to consider are robotic train operation and gas lines used for switch heaters. For determining type of gate closure, refer to EM 1110-2-2107.

12.11.3. Roadway Crossings. Generally, gap closures crossing roadways should be perpendicular and at grade. If the roadway is designated as an evacuation route or emergency access, the closure type will usually be a swing or roller gate. Opening widths need to accommodate removable vehicle crash tested barriers per the governing highway authority. As such, swing gates may not be ideal as a large section of removable vehicle crash barriers will be required. Other items to consider are the highway speeds, drainage, and grading. See EM 1110-2107 for more information on closure gates.

12.12. Design for Safety. Access to the tops of walls is likely to create situations where fall protection is needed. For earth retaining walls, a rail or fence is usually required at the top of the wall. For requirements for fall protection see EM 385-1-1 and, if accessible by the public, local building codes. For floodwalls, barriers against access to the top of the wall are usually provided at levee transitions. This may be done by fences (Figure 12.30) that impede access to the wall or by triangular pointed precast concrete caps (Figure 12.31) that cannot be easily walked on.



Figure 12.30. Fence on Floodwall to Inhibit Access to Wall Top



Figure 12.31. Pointed Cap on Floodwall to Inhibit Access to Wall Top

12.13. Architectural Treatment and Landscaping. Retaining walls and floodwalls can be esthetically enhanced through architectural treatments to the concrete and landscaping. This is strongly recommended in urbanized areas. Coordinate this with the project team landscape architects. Landscaping needs to meet the requirements of the vegetation limits in section 12.14. Guidance for architectural treatment is provided in EM 1110-1-2009. For analysis of structural strength, the depth of architectural treatments that create relief on the face of the wall is neglected in the design cross section.

12.14. Vegetation.

12.14.1. General. Landscaping and vegetation management must follow EP 1110-2-18. Landscape planting, in particular the vegetation free zone, should be fully discussed in design documentation reports. Evaluation of vegetation impact on wall performance is discussed in Chapter 14.

12.14.2. Vegetation Free Zone.

12.14.2.1. The vegetation free zone (VFZ) is a 3D corridor surrounding all levees, floodwalls, embankment dams, and critical appurtenant structures in all flood damage reduction systems. The VTZ is generally free of all vegetation except grass. The primary purpose of the VFZ is to provide a reliable corridor of access to, and along, levees, floodwalls, embankment dams, and appurtenant structures. This corridor must be free of obstructions to assure adequate access by personnel and equipment for surveillance, inspection, maintenance, monitoring, and flood-fighting.

12.14.2.2. The VFZ also provides distance between root systems and levees, floodwalls, embankment dams, and appurtenant structures. This moderates reliability risks associated with the following two situations. One is potential piping and seepage due to root penetration. The other is structural damage (a hole in the ground, surrounded by an area of disturbed earth) resulting from a wind-driven tree overturning.

12.14.2.3. EP 1110-2-18 addresses the importance of the VFZ for floodwalls that are part of levee systems. The VFZ is to be designed and maintained so as to remain free of vegetation, other than grass, for the life of the project.

12.15. Instrumentation.

12.15.1. General. Instrumentation and monitoring can be beneficial to verify design assumption and monitor project performance over time. The data collected and evaluated may forewarn of a potentially dangerous situation that gives additional opportunity for intervention. Instrumentation and monitoring programs should be tailored to the project and specific questions from design, construction, and/or operation. Project potential failure modes and associated consequences should be paramount in the decision of where and when to monitor. Common parameters monitored at various phases of the project life cycle include displacement and groundwater levels.

12.15.2. Implementation. Typical instruments include survey monitoring points, inclinometers, and strain gauges to monitor displacements. Remote sensing methods, such as radar and LiDAR, can also be used to monitor surficial displacement. Groundwater levels are typically monitored with piezometers. EM 1110-2-1908 should be referenced for planning, maintenance, and operation of instrumentation. Sponsor agreements should include instrumentation and monitoring responsibilities.

12.16. Mandatory Requirements. For permanent projects, steel piles must be protected against corrosion when exposed directly to air or water (outside of soil). For critical structures, a corrosion protection system must be used for steel piling, rather than attempting to oversize the pile to account for section loss from corrosion.

Chapter 13
Engineering Considerations During Construction

13.1. Introduction.

13.1.1. Scope. This chapter addresses some engineering considerations for wall construction. Its intent is to give design and construction engineers an overview of some aspects of installation and its effect on the design. Guidance is provided for foundation preparation, temporary protection when existing wall projects are removed for installation of new ones, earthwork, sheet pile installation, construction vibrations, and anchors.

13.1.2. Risk Considerations. A wall must be constructed correctly in order for it to perform as the design intends. The constructed project is defined by the plans and specifications. The plans and specifications should therefore adequately describe the project. Factors that may arise during construction that could affect the project risk should be anticipated as much as possible in the plans and specifications. During construction, there may be changes in anticipated site conditions and variations proposed by the contractor that the engineer may need to address. Changes to the original design should properly account for potential impacts to project risk.

13.2. Foundation Preparation.

13.2.1. Walls on Rock. Rock foundations should be cleaned and given other treatments as needed to ensure proper bonding of concrete to rock. Some rock foundations, such as shale, require a protective covering, such as unreinforced concrete, to protect them from deterioration after being exposed and before concrete placement, unless the final excavation can be performed close enough in time to the placement of the structural base slab. When a protective coating is used, it needs to ensure proper bond.

13.2.2. Walls on Soil. Earth foundations should be properly compacted, clean, and damp before concrete is placed. Excavation subgrades should be protected from environmental hazards prior to placement of concrete. Ponded water in foundation excavations should be carefully drained or pumped. To prevent the creation of a preferential seepage path, granular subgrade material should not be placed in foundation excavations under walls that primarily retain water. Additional seepage considerations to address the internal erosion failure mode for wall on soil are included in section 7.7.

13.2.3. A “mudmat” of lean concrete can be used to stabilize subbases when water is present, the foundation is soft, or the excavation will remain open for an extended period of time. The weight of the mudmat should be accounted in deep-founded structures unless the piles or drilled shafts are separated from the mat.

13.3. Construction Sequence and Temporary Protection.

13.3.1. General.

13.3.1.1. During the development of plans and specifications for construction, rehabilitation, or modification of a wall project, the sequence of work needs to be considered to ensure the wall is buildable. Construction sequencing should generally be left to the contractor, but requirements for sequencing may be needed. Factors requiring sequencing by the engineer include effects of construction on parties other than the contractor or to minimize risk from degradation of an existing project. Restrictions that are used should be tailored to provide the contractor as much flexibility for means and methods as possible.

13.3.1.2. Construction of the wall project can be affected by the presence of existing features, such as walls and embankments, channels, buildings, roads, railroads, parking lots, utilities, etc. Considerations for construction sequencing should include construction materials or excavated material that is expected to be stored near the workface. Rights-of-ways and available space to work also need to be considered.

13.3.2. Temporary Protection.

13.3.2.1. For construction of a new or replacement of wall project, all or a portion of an existing project may need to be removed. Removal of existing walls or embankments needs to be considered in the construction sequence so that the project risk isn't increased during construction. In such cases a risk-informed plan for temporary protection in the event of high water needs to be developed.

13.3.2.2. When real estate is available, often the best way to control risk is to build the new wall parallel with the existing project. This will allow the flood risk reduction system to remain intact for a majority of the construction duration.

13.3.2.3. Walls of the types covered by this manual may be used for temporary protection. By default, temporary walls of the types covered by this manual must meet the mandatory requirements of this manual. A risk assessment may be performed to demonstrate that alternate requirements can be used if they provide tolerable risk.

13.3.2.4. If piles (or sheet piles) are used as part of a temporary protection system, the piles should generally be left in place. Depending on the soil, the soil will tend to "ooze" to fill the pile voids, potentially causing displacement of the new project.

13.4. Obstructions.

13.4.1. Design for Installation Around Obstructions.

13.4.1.1. There are two types of obstructions, known and unknown. Known obstructions are those picked-up in surveys, from as-built and record drawings, and during visual inspections. Unknown obstructions, usually discovered during construction operations, are to be handled on a case-by-case basis. It is good practice for the engineer to have provisions in place to account for unknown obstructions found during construction. Unknown obstructions vary and can be something that is not captured in the survey or something built after the design survey was completed.

13.4.1.2. The engineer should investigate the site history as much as possible to identify previous land use and possible structures, roads, pipes, etc., that may result in obstructions. Depending on the soil type, use of piles that displace less soil when driven (H-piles or open pipe piles) facilitates installation near obstructions. See section 12.10 for design of walls around utilities.

13.4.2. Overhead Obstructions. Where an overhead obstruction exists that cannot be moved, such as a bridge, installing wall features, such as sheet pile or a pile foundation, can be achieved several ways. One method is to use a press-in piling rig. Another method is to use a load frame and hydraulic ram. Piles can be driven just outside the overhead obstruction and a load frame attached. The choice of methods should be left to the contractor, but in either case the pile is cut to desired length to clear the overhead obstruction and spliced in place during installation. It is important to clearly define splice details on the contract drawings.

13.4.3. Near Grade Obstructions. The agency or agencies responsible for utility location must be notified prior to breaking ground (One Call). It may also be advantageous to provide provisions in the contract documents for the contractor to utilize an inspection trench. Inspection trenches also look for unacceptable seepage paths, such as granular soil lenses or abandoned utilities. The inspection trench is typically the width of an excavator bucket and the depth is dug in lifts. These types of obstructions are unique and should be handled on a case-by-case basis.

13.4.4. Below Grade Obstructions.

13.4.4.1. These are the most common unknown obstructions and generally consist of abandoned utilities, old foundations, other abandoned artifacts, and boulders. These types of obstruction are difficult to anticipate and thus handled on a case-by-case basis. These type of obstructions are usually encountered well below grade and therefore utilizing an inspection trench may not be feasible.

13.4.4.2. For example, the contractor is driving piles and encounters a boulder near the desired pile tip elevation, the engineer may elect to cut the pile. This may require re-analysis of the foundation. Sometimes the contractor may attempt to drive through the obstruction, which may cause the pile to shift in alignment.

13.4.5. Relocations.

13.4.5.1. Overhead utility lines are relocated temporarily for most walls. Subsequent to pile driving, the lines can usually be placed back in their original position. Underground lines may be removed for pile driving and then placed back through the wall. Or piles may be driven around the utility. Temporary bypass lines are necessary for some situations.

13.4.5.2. The Government should be specific on who is doing the relocations (Government or contractor). A contact for the relocation needs to be specified. Relocations should happen before the new work starts because they can easily cause delays to the schedule if not accounted for ahead of time. Relocations associated with the railroad and petroleum industries may require even more advanced coordination, years in some cases.

13.5. Earthwork.

13.5.1. Excavation.

13.5.1.1. General. Excavation consists of the removal and disposal of material to the grades and dimensions provided on the plans. A dewatering system consisting of sumps and pumps or wells may be required depending on subsurface conditions. An excavation and dewatering plan should be submitted by the contractor for review prior to commencement of work.

13.5.1.2. Verification. During construction, it is important to inspect the side walls and bottom of excavations to verify in situ soils are similar to those assumed in design. This is particularly true with regard to filter gradation requirements. Absent visual confirmation of the location, placement, filter compatibility, internal stability of in situ soil, and drain discharge capacity, the best of design intentions can be overwhelmed by unforeseen conditions in the field. If a collector system is used, it is recommended to camera inspect the pipe early on during placement of backfill materials. This allows defects to be corrected without excavating the full depth of the backfill.

13.5.2. Voids Due to Pile Driving. During pile driving operations, voids may form adjacent to the webs and flanges of the piling due to soil drawdown. Typically, these voids are first pumped free of water that may be present, either due to seepage or rain, and then backfilled with a cement-bentonite-sand slurry. The slurry should be fluid enough to fill the voids and strong enough to approximate the strength of the in situ material.

13.5.3. Backfill.

13.5.3.1. Material placed behind the wall should be compacted to prevent settlement. The amount of compaction required depends on the material used. Over compaction could induce additional lateral pressures that may not have been accounted for in the design. Typically, granular fill is placed in thin lifts. Each lift is compacted before the next is placed. If backfill is to be placed on both sides of a wall, placement should be in simultaneous equal lifts on each side. There are some situations in which the use of clay backfill is unavoidable, as in backfill for

walls in levees and dams. Under these circumstances very strict controls on compaction are required.

13.5.3.2. During winter construction, frozen backfill material should not be used under any circumstances. This material may appear satisfactory when put into place, but it can be adversely affected when it thaws.

13.5.3.3. Placing and Compacting.

13.5.3.3.1. The backfill material should be carefully selected. It should be compacted to prevent large settlements due to its own weight. The amount of compaction required depends on the material used and the purpose of the structure. Very strict control of compaction is required when the fill is a cohesive soil. When granular fill is used, the material should be placed in thin lifts with each lift being compacted before the next lift is placed (see EM 1110-2-1911).

13.5.3.3.2. Precautions should be taken to prevent over compaction, which will cause excessive lateral forces to be applied on the structure. If heavy compaction rollers are used near the wall, their effect on lateral earth pressures on the wall should be considered in the design. Alternatively, the allowable weight of compactors may be restricted by the specifications to control wall pressures.

13.5.3.3.3. It is good practice to place a layer of impervious soil that is a minimum of 12 in. (30 cm) thick in the upper lift of the backfill to reduce infiltration of rainwater. Backfill should be brought up equally on both sides until the lower side finished grade is reached.

13.5.3.3.4. Placement of sand and gravel backfill needs to be done in such a manner as to minimize segregation or contamination prior to, during, or after installation. Segregation will result in zones of material too fine to meet the permeability requirements and other zones too coarse to meet the stability requirements. Contamination of filter material from muddy water, dust, etc., during construction may clog the voids in the material and prevent proper drainage. In the event that filter or drain materials are contaminated, they should be replaced.

13.5.3.3.5. Filter materials subject to cementation should be rejected. Compaction of the backfill should be limited to prevent breakdown of material or over-compaction resulting in lowered permeability.

13.5.3.4. Prefabricated Drainage Composite. Special consideration should be given when compacting soil backfill near prefabricated drainage composites adjacent to retaining walls. Compaction adjacent to the retaining wall will induce high lateral pressures. This could crush the prefabricated drainage composite and/or reduce the in-plane permeability.

13.5.3.5. The drainage composite manufacturer’s recommendations for backfilling and compaction near the composite should be followed. A test section may be required to determine the acceptable operating conditions of the compaction equipment. Where crushed stone is used as the backfill material, a blanket of sand should be provided against the drainage composite to protect it against damage during compaction.

13.5.3.6. Longitudinal Drains. One bad joint could render an entire drainage system inoperative. Care should be taken in compacting soil backfill over drains to prevent crushing of the pipe. Differential settlement can cause pipe joints to open up, permitting soil backfill to infiltrate. This should be minimized by attaining uniform adequate compaction of the underlying material.

13.5.3.7. Compaction at Earth Retaining Walls Perpendicular to Dam and Levee Embankments.

13.5.3.7.1. These types of features require special compaction in order to prevent concentrated leak erosion along the walls. If possible, compaction with hand compactors should be avoided, and heavy equipment should be used adjacent to the wall.

13.5.3.7.2. Where heavy equipment can be used to compact the soil against the wall, the construction surface of the embankment should be sloped at about 1V on 6H for a distance of 8 to 12 ft. (3.7 m) away from the rock or concrete. This will allow the roller to act more directly in compacting the soil against the structure. The area can then be rolled perpendicular to the face of the structure by heavy pneumatic equipment or by a sheepsfoot roller. Alternately, heavy pneumatic equipment can be used in a direction parallel to the face.

13.5.3.7.3. Where heavy equipment might damage the structure, the roller should be allowed to work as close as possible without damaging the wall. The portion of embankment directly against the wall should be compacted with smaller equipment in thinner lifts. Compaction in confined areas is described EM 1110-2-1911, section 5.12, with additional recommendations in Bureau of Reclamation (2012) section 10.6.3.7.

13.6. Sheet Pile Installation.

13.6.1. General. This section covers installation of steel sheet piles. For additional guidance specific to PVC sheet piles, see Appendix B. For installation of deep foundations, see EM 1110-2-2906.

13.6.2. Equipment and Accessories.

13.6.2.1. General. The most common methods of installing sheet pile walls include driving, jetting, and trenching. The type of sheet piling often governs the method of installation. Contract specifications should prohibit the installation of sheet piling until the contractor's methods and equipment are approved. The contractor needs to provide a work sequence so that the pile driving does not disturb fresh/new concrete.

13.6.2.2. Hammers.

13.6.2.2.1. Types of driving hammers allowed for sheet piles include steam, air, diesel drop, single-action, double-action, differential-action, press in, or vibratory. The required driving energy range should be specified in foot-pounds based on the manufacturer's recommendations and the type of subsurface that will be encountered.

13.6.2.2.2. Vibratory hammers are widely used because they usually can drive the piles faster, do not damage the top of the pile, and can easily be extracted when necessary. A vibratory hammer can drive piling up to eight times faster than impact hammers depending on the type of subgrade. When a hard driving condition is encountered, a vibratory hammer can cause the interlocks to melt. If the penetration rate is 1 foot or less per minute, the use of a vibratory hammer should be discontinued, and an impact hammer should be employed.

13.6.2.2.3. The selection of the type or size of the hammer is based on the soil in which the pile is driven. The designer should be aware of the soil stiffness and possibility of obstructions, which could cause failure or weakening of the sheet pile during driving.

13.6.2.3. Guides and Templates. To ensure that piles are placed and driven to the correct alignment, a guide structure or templates should be used. At least two templates should be used in driving each pile or pair of piles (sheet piles are typically driven in pairs). Templates should also be used to obtain the proper plumbness of the sheet pile wall. Metal pilings properly placed and driven are interlocked throughout their length. Templates should be anchored to prevent movement. Raised templates perform better to keep piles in alignment.

13.6.2.4. Accessories. A protective cap should be employed with impact hammers to prevent damage to the tops of the piling. Protective shoes to protect the tip are also available so that driving through harder soil strata is possible.

13.6.2.5. Obstructions. If an obstruction is encountered during driving, it should be removed or penetrated with a chisel beam. Some obstructions cannot be removed or penetrated and will require realignment of the sheet pile. This may require revisiting the design.

13.6.2.6. Misalignment. During driving, the piling next to the one being driven may tend to follow and then fall below the final design elevation. In this case it may be necessary to fasten piles together before the next pile is driven. Extraction, or pulling of specific piles for inspections, may be required if damage to the pile or interlocks is suspected or if excessive drift occurs. The circumstances should be carefully investigated to determine the cause of damage, and remedial action should be taken before redriving. Consideration should be given to leaving the pile in place if there is excessive drift, rather that pulling the pile, due to the disturbed soil. This may require revisiting the design.

13.6.3. Storage and Handling.

13.6.3.1. Steel Piling. Steel piling may be damaged when mishandled or stored improperly, resulting in permanently bent sheets. Piling stored on site should not exceed stack height and weight as shipped from the mill. Blocking is used to maintain piling in a level position. Blocking between bundles should be located directly over any blocking placed immediately below. Slings or other methods that prevent buckling during lifting are typically used on long lengths of steel piling. Additional care is required when handling piling with protective coatings, and damaged areas will require repairs prior to driving.

13.6.3.2. Light-duty steel, aluminum, concrete, and plastic sheet piles should be stored and handled according to the manufacturer's recommendations.

13.6.4. Methods of Installation for Sheet Piling.

13.6.4.1. Driving. Sheet piling is typically driven with traditional pile driving equipment. The sheet piles are aligned using templates or a similar guiding structure instead of leads. In areas where construction vibrations are of concern, sheet piling may be driven using a non-impact, non-vibratory, press-in driving method, or with a high frequency vibratory/press-in hammer.

13.6.4.2. Jetting. Pilings should not be driven with the aid of water jets without authorization of the design engineer. Jetting must not be performed in dams or levees. Jetting is usually authorized to penetrate strata of dense cohesionless soils. Authorized jetting should be performed on both sides of the piling simultaneously and should be discontinued during the last 5 to 10 ft. (1.5 to 3 m) of pile penetration. Adequate provisions need to be made for the control, treatment, and disposal of runoff water.

13.6.4.3. Trenching. Under certain conditions it may be necessary to install a sheet pile wall by means of a trench. Trenching is usually done when the pile penetration is relatively shallow and there is a controlling factor which precludes driving. The backfill material on both sides of the trenched sheet pile wall should be carefully designed. Voids must be filled with impervious fill or grout.

13.6.5. Liquefaction Potential During Sheet Pile Driving.

13.6.5.1. The potential for liquefaction may exist when a dynamic operation takes place upon a granular foundation or a stratified foundation which contains granular soils. The risk of liquefaction should be evaluated on a case-by-case basis using the recommendations of Technical Report GL-88-9 (Torrey et al., 1988). If the foundation soils meet the criteria of this report, the assumption may be made that during pile driving the acceleration of soil particles will be sufficient to induce liquefaction, and therefore, a potential for damage exists.

13.6.5.2. Limitations should then be set on pile driving, such as: maximum water stage during driving, minimum distance to the deposit of liquefaction prone soil, and size of pile driving hammer and its rated energy. Limits on pile driving have been successfully applied along the levees of both the Mississippi and Atchafalaya Rivers. Pile driving is prevented or limited based upon the potential for liquefaction at a stage when the water level is above the landside ground surface and pile driving is planned within 1,500 ft. (460 m) of the levee or flood protection works. The extent of limitations placed on pile driving should be evaluated against the potential for damage to the public.

13.6.6. Tolerances.

13.6.6.1. Driving. A vertical tolerance of plus or minus 1 1/2 in. (3.8 cm), from the design elevation, is usually permitted. If the height is critical, the tolerance may only be plus. Sheet piling should not be driven more than 1/8 inch per foot (1.0 cm/m) out of plumb either in the plane of the wall or perpendicular to the plane of the wall.

13.6.6.2. Excavation. Generally, for an excavated surface on which concrete will be placed, the allowable vertical tolerance is 1/2 in. (1.3 cm) above line and grade and 2 in. (5 cm) below. For all other areas, vertical and horizontal tolerances of 6 in. (15 cm), plus or minus, from the specified grade are usually permitted. Neither extremes of these tolerances should be continuous over an area greater than 200 ft^2 (18.5 m^2). Abrupt changes should not be permitted. If the material placed in the excavation is critical, the tolerance should only be minus.

13.7. Construction Vibrations.

13.7.1. Vibrations due to construction activities such as pile driving, sheet pile installation, ground improvement, and heavy equipment operation, may affect and damage existing structures. Vibration monitoring should generally be specified no matter what installation method is used, especially near public structures. Work should be performed in a manner which will limit vibrations at the structure nearest to the work being performed to a maximum of 0.5 inch per second (1.3 cm/sec). More sensitive structures may require a smaller limit on maximum vibrations.

13.7.2. Pre-construction vibration monitoring, sound surveying, and structural inspection/surveying of adjacent critical structures may be necessary for sensitive structures or structures very close to the work. Preconstruction surveys may also be needed for nearby buildings that are inhabited during construction activities. This is because humans are able to sense lower vibrations than those that can cause structural damage. These surveys should be performed by parties experienced with this activity. Vibrations at nearby structures should then be monitored during construction, and work practices adjusted, if recorded vibrations exceed allowable.

13.7.3. Pile Driving Adjacent to Concrete Placements.

13.7.3.1. Installation of piles close to newly placed concrete can cause cracking and other damage to the new concrete. To manage the potential for damage, the following requirements are recommended for normal concrete:

13.7.3.1.1. No driving within 100' of concrete placed within 7 days.

13.7.3.1.2. No driving within 30' of concrete placed within 28 days.

13.7.3.1.3. Driving must cease if peak particle velocity exceeds 0.25 in. per second (ips) (6 mm/sec) on the ground at adjacent structures.

13.7.3.2. Variations may be allowed when the concrete reaches a minimum of 75 percent of its design strength within 3 days and reaches the required strength within 7 days.

13.7.3.2.1. No driving within 100' of concrete placed within 3 days.

13.7.3.2.2. No driving within 25' of concrete placed within 7 days.

13.7.3.2.3. Cease driving if peak particle velocity exceeds 0.25 ips (6.5 mm/sec) for concrete placed within 3 days, 0.50 ips (13 mm/sec) for concrete placed within 7 days, and 0.75 ips (19 mm/sec) for concrete placed after 7 days.

13.7.3.3. The contractor should be required to submit a plan for monitoring the vibration levels stated above. At a minimum, vibrations should be monitored at the base of the nearest concrete and up to 30 ft. (9 m) away on each side of the nearest point. The maximum vibration may not occur at the nearest point. Vibrations should be monitored at the top of concrete walls since vibrations could be amplified up to eight times at this location.

13.8. Anchors.

13.8.1. Construction activities in the vicinity of anchors and anchor walls must be thoroughly evaluated to verify that the activities will not adversely affect the wall or anchor performance. Excavation, drilling, and the effect of surcharges should all be considered.

13.8.2. Passive Anchors. Improperly planned construction methods may produce loads which exceed those used for design. Anchor forces, soil pressures, and water loads are affected by the method of construction and construction practices. The sequence of tightening tie rods should be specified to prevent overstress in isolated sections of the wale or the sheet pile wall. Anchors and tie rods should be placed and tightened in a uniform manner so that no overstresses may occur. Backfilling above the anchor elevation should be carefully controlled to prevent bending of the tie rods. The backfill material should be controlled, and the thickness of compacted layers should be limited, to ensure proper compaction and drainage of the backfill material.

13.8.3. Post-Tensioned Anchors. Each post-tensioned ground anchor that is part of a completed structure is load tested to verify its load capacity and load deformation behavior before being put into service. The design engineer will determine the test loads. See Chapter 11 for more information.

13.8.4. Excessive fluid pressures when drilling or grouting anchors could have the potential to result in hydraulic fracturing, heave at the ground surface, and erosion. The occurrence of these hazards could damage the soil around anchors and lead to internal erosion issues when water is present or to other performance issues. ER 1110-1-1807 has guidance for drilling in dams and levees. The same guidelines and principles can be applied to anchor drilling and grouting to reduce the likelihood for damaging the surrounding soil.

13.9. Wall Elevation Verification Surveys.

13.9.1. General. Walls must be constructed to the design elevations to perform their function. Floodwall elevation verification surveys must be performed using differential leveling. Documentation of the survey must be submitted for verification by the engineer. The survey differential levels should be to Third Order closure standards. Closure error (in feet) should be less than or equal to 0.05 x √(distance in miles).

13.9.2. Concrete Placement. Surveys should be performed to verify the elevation of the top of formwork prior to placing concrete in the base slab and placing concrete in the wall stem for the first monolith constructed and at each tenth monolith thereafter. Upon completion of all monoliths and prior to the final inspection, a final floodwall elevation verification survey should be performed for the entire project reach. For surveys, two measurements should be taken on each wall monolith. Measurements should be taken one foot from each end of the monolith. Measurements should be located at the center of the floodwall stem.

13.9.3. Elevation Certificates. The surveyor should provide certification of the top of wall survey along with all benchmark verification records. These should be required within 14 days of survey completion. Elevation verification surveys should be stamped and sealed by a licensed surveyor.

13.9.4. Remedial Actions. If the top of floodwall elevation measured at the completion of the construction project is below the design elevation, the engineer must perform a technical assessment of the cause of the deficiency. Deficiencies may be created by initial construction inaccuracy or by contractor activities after the wall was constructed. The Contractor must submit a plan for addressing deficiencies that were determined to have been caused by the Contractor.

13.10. Mandatory Requirements.

13.10.1. Jetting for installation of piling must not be performed in dams or levees.

13.10.2. Voids around sheet piles installed in trenches must be filled with impervious fill/grout.

Chapter 14
Evaluation of Existing Walls

14.1. Introduction.

14.1.1. Evaluation Activities. Existing projects may be evaluated for support of risk assessments, periodic inspections, and periodic assessments. They may also be evaluated for project modifications, for changes in site conditions, after observed performance issues, or for flood insurance accreditation. This chapter provides information and guidance for the evaluation of walls as part of project evaluation activities. For routine inspection and maintenance activities, see Chapter 15.

14.1.2. Walls as Components. Walls are almost always parts of systems and are evaluated as components of those systems. Information is provided in this manual for evaluation of the wall components. The results of the evaluation of the wall components are incorporated into the overall project evaluation.

14.1.3. Performance. Evaluations are performed by carefully considering all failure modes. The evaluation should look at the wall as part of the overall system and provide a reasonable level of assurance that the wall will perform adequately over the full range of loading. If the wall does not meet requirements, risk reduction measures may be required.

14.2. Evaluation Processes.

14.2.1. The basis of performance for the evaluation is established by comparing the existing conditions of the wall to the mandatory requirements in this manual. This is used to inform the risk assessment processes used for the evaluation of walls for dam and levee systems. Risk assessment should also be used for evaluation of walls in other project types that do not meet the mandatory requirements.

14.2.2. Risk assessment is described in Chapter 3. Through risk assessment, existing walls that do not meet the mandatory requirements in this manual may be shown to provide tolerable incremental risk. Incremental risk in this use means risk from structural or geotechnical failure modes. Alternately, the assessment may provide confirmation of the need for risk reduction measures and inform the type of measures that are required.

14.2.3. Risk reduction measures are required if the walls do not meet the mandatory requirements of this manual or are not approved of as being able to provide tolerable incremental risk. Measures to address wall deficiencies should be prioritized considering the overall risk that the wall poses to the system.

14.3. Risk Assessment.

14.3.1. Guidance. Guidance for performing risk assessments is provided by Dam Safety and Levee Safety regulations. For additional information on risk assessment, see ER 1110-2-1156 for dams. For levee systems, see ER 1105-2-101, or other applicable guidance provided by CECW-EC at the time of the risk assessment. More information on methods and requirements for risk assessment can be found in USACE – USBR Best Practices in Dam and Levee Safety Risk Analysis, ER 1110-2-1156, and other USACE guidance used to administer the dam and levee safety programs.

14.3.2. Risk Assessment Program. USACE assesses the risk of dams and levees on a regular and re-occurring basis. This program was implemented by first performing screening risk assessments on dams and levees. Then more detailed assessments are performed in order of descending risk from the screenings. The results of the latest risk assessment for a dam or levee should be considered as risk-informed decisions are made throughout the wall life cycle.

14.3.3. Economic Risk. For normal walls, risk is defined by economics, rather than by life safety. Processes for performing risk assessment of normal walls are similar to those used for critical walls in dams and levee systems. Economic risk can, and is often, estimated for critical walls, although life safety is paramount for those walls.

14.3.4. Levels of Assessment.

14.3.4.1. Risk assessments can be qualitative, quantitative, or a blend of both (semi-quantitative). Risk assessments are used to provide factual and analytical basis for risk-informed decision making. The Dam and Levee Safety Program risk assessments are scalable based on the decision to be made. They range from screening level, to semi-quantitative risk assessment, to quantitative risk assessment. Moving from screening level to semi-quantitative to quantitative incrementally increases in detail and confidence to reduce uncertainty in the results.

14.3.4.2. The amount of information on the performance of the structures needed to support each level of risk assessment increases as the risk assessment becomes more quantitative. However, a high level of knowledge of performance and probability of failure can be used to support even screening level risk assessments.

14.4. Information Requirements.

14.4.1. General. The information as described in this section should be obtained before evaluation is performed.

14.4.2. Data Preparation and Hazard Identification. This step involves identifying and gathering all pertinent information to be used for the evaluation. Gaps in information will be identified. From that, a determination will be made if more data collection or analysis is needed in order to answer the questions identified during the scoping step. This step also involves identifying the potential hazards (events or conditions that create risk) to be considered for the evaluation.

14.4.3. Collection and Incorporation of Existing Information. Evaluation of existing walls can be different from the design of new walls because additional performance information is often available. Construction and operation information is useful to verify that the wall is performing as the designer intended and to estimate degradation of the wall caused by service conditions. In addition, information can be used to reduce the uncertainties associated with the hydrologic and site conditions, engineering properties, and wall dimensions to a practical minimum. The following steps should be taken to collect information:

14.4.3.1. Search all available records of design, construction, and operation, especially regarding the maximum loading the wall has experienced to date. For floodwalls, the flood of record, location of overtopping sections, and operational procedures associated with overtopping are particularly important.

14.4.3.2. Review historical data concerning signs of distress (such as leakage, excessive seepage or piping, excessive concrete cracking, corrosion of rebar) and records of repairs.

14.4.3.3. Locate as-built drawings, specifications, O&M manual(s), computations, subsurface explorations and testing records, hydrographs, inspection reports, and instrumentation data. If critical data is not available, field investigations will be required to obtain it. For preliminary investigation, unavailable data can be estimated from general geologic sources, nearby structures, similar structures built in the same time period, and from engineer manuals, standards, and codes of the similar time period.

14.4.3.4. Perform a field inspection that focuses on the observed vertical and horizontal distortion of the wall alignment and visible damage to critical components for wall stability. Field investigation should also focus on changes in the site conditions that may affect the performance of the wall. Potential changes in the site include dredging activities, global instability or erosion of the riverbank or levee, post-construction modifications, encroachments, and vegetation.

14.4.3.5. Review existing survey data to ensure that the project datum requirements are met.

14.4.3.6. Verify loading probability for controlling loads. This will usually consist of establishing the hydraulic levels and associated return frequencies, but may also include seismic, impact from vessels, debris, ice, or other loading scenarios.

14.4.3.7. For floodwalls, review potential for overtopping of a floodwall prior to inundation of the area behind the levee system and provisions for scour protection.

14.4.4. Site Information. See Chapter 5 for requirements for classification of the site information as Well Defined, Ordinary, or Limited.

14.5. Performing the Evaluation.

14.5.1. Once the necessary information has been collected, the evaluation of a wall system can be conducted. This chapter provides considerations for performing the evaluation. An evaluation will start by comparing the existing wall to the mandatory requirements in this manual and the associated EMs for hydraulic structures. For cases where the mandatory requirements are not met, a more advanced evaluation may be performed. For critical structures this should include a risk assessment to evaluate the wall against tolerable risk guidelines as described in section 14.3.

14.5.2. The primary steps in the risk assessment of a wall system are to define all possible loads that the wall may be subjected to and determine the annual probability of the loading. Given this loading, all possible failure modes for the wall are identified, with the most critical failure modes carried forward for additional analysis. These failure modes should be informed by the general failure modes in Chapter 3 and the performance modes described in Chapters 7–11.

14.5.3. For a risk analysis, it is necessary to evaluate the wall to a failed state that results in consequences. The risk assessment will therefore include progression of the entire failure mode. In addition, it may require the inclusion of additional effects that are not generally considered in design. For example, this may include the development of active and passive pressures when the design may have only included at-rest pressure. Alternatively, there may be 3D effects that may add to the stability of the wall that would not be considered in a normal design check. This evaluation will be done in a probabilistic framework in order to establish the probability of failure.

14.5.4. Reliability analysis may be used to compute probability of failure, but it is typically not used on its own as the sole method for estimating failure probability. It must be tempered by engineering judgment and full awareness of the biases and uncertainties that affect stability (or other) calculations. However, it is a useful tool to inform expert judgment on conditional probabilities to be used in an event tree or other application. USACE best practice is to utilize the best available and multiple methods, but final probabilities are estimated using team elicitation based upon the totality and strength of the evidence. Once the probability of failure is determined, the consequences of failure can be quantified.

14.6. Evaluation Considerations.

14.6.1. This section provides some specific considerations for evaluating the wall types covered in this manual. It may not contain all the considerations for a particular wall or project.

14.6.2. Past Performance. The performance of the wall under past load events can help inform probability of failure. For many walls, however, historic events may not have created a significant loading on the wall. The use of past performance to adjust the deterministic minimum requirements is described in section 5.2 of this manual.

14.6.3. Material Properties.

14.6.3.1. Material properties must be defined for the structural components, backfill materials, foundation materials, etc. These material properties should be based on the current age and condition of the structure. The actual properties should be used for the evaluation instead of specified properties. As noted in section 14.4, field investigations may be required to obtain these properties.

14.6.3.2. For a risk assessment, probability density functions are defined for material properties that will have an effect on the analysis. The distributions are carefully considered to ensure that the full range of values within the distribution are within reason for the material in question. For example, for stability failure modes the sliding strength parameters will be key to defining the probability of sliding. Based on testing data, these parameters will often have a large degree of uncertainty. If care is not taken to bind the distribution, unreasonably low values may be contained in the distribution that will lead to unrealistic probabilities of failure. The bounding values for distributions should also be compared to the historic performance of the wall to ensure they are reasonable.

14.6.4. Structural Strength and Condition. Since the evaluation of a wall is inclusive of all failure modes, the structural strength failure modes are also considered. It is important to consider the current condition of the wall for these failure modes. This includes corrosion, concrete degradation, or other deterioration that will affect the strength of the wall.

14.6.5. Geotechnical Failure Modes. Besides soil and rock stratigraphy, materials, and piezometric data, evaluation of geotechnical failure modes should also carefully consider other site conditions that may affect the evaluation. Some examples for consideration are:

14.6.5.1. Site layout, geometry, and the effect of scour and erosion.

14.6.5.2. Variability of water tables and of surface water.

14.6.5.3. Extrapolations, approximations, and simplifications made in development of stratigraphy.

14.6.5.4. The possibility of in situ soils behavior being different from lab behavior. For example, the presence of joints and fractures in rock and clay may greatly change the permeability of in situ materials compared to lab tests.

14.6.5.5. Three-dimensional effects.

14.6.5.6. Encroachments that may impart additional load on the foundation.

14.6.6. Serviceability. There may be serviceability considerations for a wall that do not lead to a failure. These serviceability limits may not affect risk but should still be included in the evaluation of the wall in order to determine if the wall is performing acceptably.

14.6.7. Vegetation and Encroachment Considerations.

14.6.7.1. Minimum requirements for vegetation and encroachments are provided in Chapter 12. For risk assessment, assessing vegetation growth (primarily trees) adjacent to walls, and its potential to affect performance with respect to stability and seepage is a very complex issue. Each situation requires site-specific considerations by experienced, knowledgeable personnel. Important factors to consider include:

14.6.7.1.1. The proximity of the vegetation growth to the wall.

14.6.7.1.2. The density of the vegetation growth.

14.6.7.1.3. Type of vegetation, past performance under significant load.

14.6.7.1.4. Geological and geotechnical properties of the foundation.

14.6.7.1.5. Construction methods.

14.6.7.1.6. Duration of head pressures sufficient to initiate seepage and/or piping.

14.6.7.1.7. Water velocities.

14.6.7.1.8. The ability to detect issues is they arise during a flood event.

14.6.7.1.9. Large trees will tend to be of greater concern than smaller trees.

14.6.7.1.10. Dense vegetation is generally of greater concern than sparse vegetation.

14.6.7.2. Potential impacts of trees overturning driven by wind or other loading, such as ice or snow, should also be considered. Large trees with extensive or deep-root systems can remove a large amount of soil when overturned and uprooted. This may potentially affect global stability and seepage resistance. In addition, the potential for trees falling on and damaging the wall itself needs to be evaluated.

14.6.7.3. A similar approach can be taken when considering encroachments that do not meet minimum requirements from Chapter 12. Not all encroachments are necessarily harmful with respect to wall performance. Encroachments that shorten the seepage path and increase the exit gradient can adversely affect wall performance in certain situations. These are generally those that involve excavations for structures or other features where the foundation lends itself to a potential seepage and/or piping concern.

14.6.8. I-Wall Connections.

14.6.8.1. General. The mechanics of load transfer in the connection of the concrete cap to the sheet pile in an I-wall was not well understood in the past. For this reason, additional information is provided here. The connection is part of the load carrying system and should be

included as part of strength evaluation of an existing I-wall. The evaluation should include an understanding of how the connection was designed. It is useful to evaluate the restraint of the driving side leg and if restraint reinforcement can be fully developed. See Chapter 9 for information on the mechanics of the I-wall connection.

14.6.8.2. Background.

14.6.8.2.1. History. The design of I-wall connections has varied greatly, and different design approaches have been used. For the evaluation of some walls, an understanding of I-wall history can be useful. In the late 1930s, Louisville District investigated the use of steel sheet pile cantilever walls and conducted full-scale tests at Paducah, Kentucky, and at Tell City, Indiana. To study wall stability, tests were conducted that included varied foundation materials, pile stiffness, head of water, and pile penetration. Walls were constructed with only sheet pile and concrete caps to just below the ground surface.

14.6.8.2.2. Early Guidance. After the I-walls tests, USACE floodwall design was provided in EM 1110-2-2501 (Department of the Army, Corps of Engineers, 1948). EM 1110-2-2501 focused primarily on T-type walls and provided little guidance on the design of I-walls. This manual described three different types of I-walls, as shown in Figure 14.1. The Type 1 through 3 designations can be found on some older project drawings. Note that the Louisville District tests and EM 1110-2-2501 use relative long embedment of the sheet pile into the concrete cap.

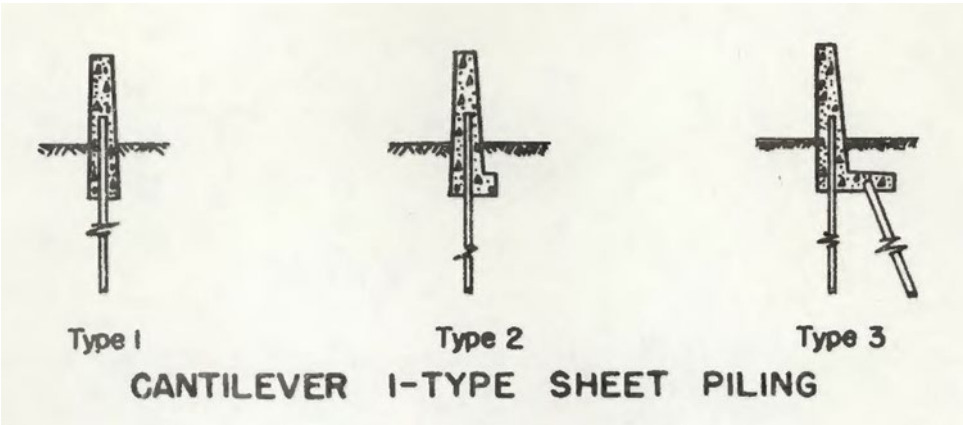

Figure 14.1. I-Wall Types from EM 1110-2-2501

14.6.8.2.3. I-Wall Types. The Type 1 walls are generally shorter and do not have reinforcement to restrain the driving side leg. The Type 2 walls have a short landward side toe. They have been used with and without the driving side reinforcing hooked through holes in the sheet pile at the bottom of the driving leg. The Louisville District I-wall investigations indicated that a 5 ft. (1.5 m) wide toe could limit deflection. The toe shown for Type 2 walls is much shorter and may not affect deflection. It could be used to provide embedment to the hooked bars. Some walls show the toe as a separate pour and used as a footing to improve constructability of the remaining stem. The Type 3 wall is generally known today as a braced sheet pile wall, as described in Chapter 2.

14.6.8.2.4. Later guidance, such as EM 1110-2-2504, showed example details with much less embedment of the sheet pile into the cap. The types shown in earlier guidance was abandoned. EM 1110-2-2504 was published in 1992 and rescinded with the publication of this manual. The general practice for I-walls constructed at the end of the 20th century and the beginning of the 21st was to extend the sheet pile only a few feet into the concrete.

14.6.8.3. Strength Evaluation. Connection evaluation should include investigating concrete flexural strength and adequacy of reinforcing details. The development length of primary wall bars and tie bars (if present) should be verified. Flexural strength should be evaluated differently depending on connection restraint provided.

14.6.8.4. Evaluation of Unrestrained Connections.

14.6.8.4.1. Connections with an unrestrained driving leg must be evaluated for flexural strength based on the cracking moment, M_{cr}, of the resisting side leg. Provisions in ACI 318 for structural plain concrete can be used to evaluate the nominal design strength of these I-walls. The factored moment, M_u, at the top of the resisting leg (as defined in Chapter 9) can be compared to the nominal flexural strength of the resisting leg section according to ACI 318:

$$\varphi M_n > M_u \qquad \text{Equation 14.1}$$

Where:

$$\varphi M_n = \varphi M_{cr} = \varphi 5\sqrt{f'_c} S_m \qquad \text{Equation 14.2}$$

φ = 0.6

M_{cr} = cracking moment

f'_c = nominal concrete strength

S_m = the elastic section modulus of the concrete section on the resisting side of the sheet pile

$M_u = LF\ M_a$ Equation 14.3

LF = load factor defined in paragraph 9.7.5

M_a = the bending moment in the wall at the top of the sheet pile

14.6.8.4.2. For example and relative comparison, an unrestrained PZ-27 sheet pile with a 24 in. (61 cm) wide concrete cap using f'_c of 4,000 psi (27.6 MPa) and under hydrostatic load only would have strength limited by the M_{cr} of the resisting leg. Based on the structural plain concrete section of ACI 318, the maximum water height to cause cracking of the resisting leg is 6 ft. (1.8 m) above the top of sheet pile.

14.6.8.4.3. For the same I-wall configuration using EM 1110-2-2104 with a load factor of 2.2, the calculated M_{cr} of the resisting leg occurs at a hydrostatic head of 10.7 ft. (3.3 m) above the top of sheet pile. Therefore, for higher walls where restraint of the driving leg is not provided or is uncertain, the strength of the connection may limit the design or ultimate capacity of the I-wall.

14.6.8.5. Determination of Concrete Tensile Strength for Risk Assessments.

14.6.8.5.1. For risk assessments, the tensile capacity is likely higher than the ACI 318 design tensile strength. This is partially due to actual tensile strength being higher than the specified minimum and partially from age strengthening of concrete.

14.6.8.5.2. The tensile strength is usually expressed as a function of the concrete compressive strength. For a given specified concrete strength f'_c, 3–6 ksi (20 to 40 MPa), the mean concrete strength, f_c, at 28 days is about 20 percent more than f′c, the specified strength. The higher mean concrete strength is required to statistically meet 28-day cylinder minimum strength requirements. In addition, over time concrete compressive strength can increase up to about 25 percent of the corresponding 28-day strength. This depends on the type of cement, the temperature, and the type of curing.

14.6.8.5.3. In FEMA 356 the expected compressive strength of aged concrete is 1.5 times the lower bound strength, with the lower bound strength taken as f'_c. FEMA 356 does not give an upper bound value. An upper bound can be assumed as one or two standard deviations (700 psi (4.8 MPa)) above the expected strength. ACI 209.2R and the Euro-International Committee for Concrete (1993) also have models to predict age strengthening of concrete.

14.6.8.5.4. The tensile strength of concrete is more variable than the compressive strength and can be reduced significantly due to environmental conditions. The tensile strength of concrete is dependent on many variables. These variables include concrete compressive strength, paste and aggregate strength, aggregate size, load orientation, loading history, and load deformation rates. By practice, tensile strength is computed according to a function of the concrete compressive strength. Various tensile strengths are listed in Table 14.1 for a compressive strength of 6,000 psi (41.4 MPa). This demonstrates the high variability of possible results.

Table 14.1
Example: Tensile Strength of Concrete for f′c of 6,000 psi (41.4 MPa)

Method	Tensile Equation	Tensile Strength
Modulus of Rupture, *fr* (ACI 318)	$7.5(f'_c)$^.5	581 psi (4.01 MPa)
Spitting Tensile 1, f_{ST1} (EP 1110-2-12)	$7(f'c)$^.5	542 psi (3.74 MPa)
Spitting Tensile 2, f_{ST2} (Raphael, 1984)	$1.7(f'_c)$^.66	561 psi (3.87 MPa)
Direct Tensile, f_{DT} by f_{ST2} (EP 1110-2-12)	0.8* f_{ST2}	449 psi (3.10 MPa)
Direct Tensile, f_{DT} by *fr*	F_{DT} = 0.75**fr*	436 psi (3.00 MPa)
ACI 318, Plain Concrete (22-2)	$5(f'_c)$^.5	387 psi (2.67 MPa)

14.6.8.5.5. Actual tensile strengths are dependent on wall-specific conditions and is determined on a case-by-case basis. According to EP 1110-2-12, direct tensile strengths are representative of actual tensile strength. Considerations for potential reduction of tensile strength for I-walls include vertical orientation of wall, aggregate type, aggregate size, and environmental conditions. Vertical orientation of stress indirectly effect tensile strength as the bleed water tends to form below each aggregate reducing bond between paste and aggregate. In addition, for maximum aggregate size greater than 1.5 in. (38 mm), tensile strength should be reduced 10 percent.

14.6.8.6. Evaluation of Restrained Connections. Connections in which restraint to the lower end of the driving leg is provided are evaluated for strength and adequate reinforcement details. The flexural strength can be estimated as the nominal moment capacity of the driving side leg as presented in section 9.8.5. Reinforcement details need to be reviewed to evaluate whether the restraint reinforcement provided can fully develop required loads.

14.6.8.7. Evaluation of Special Cases.

14.6.8.7.1. It is difficult to determine if full restraint is provided for some I-wall configurations. Non-typical configurations may require special considerations. In these cases, the capacity of the connections can be bracketed by the restrained and unrestrained connection capacities discussed above. If these walls are critical then advanced finite element modeling is required to understand the behavior and capacity.

14.6.8.7.2. Some designs that include tie or U-type bars only near the top of the connections (through sheet pile handling holes) have little effect on the flexural strength of the connection. The connection must be evaluated as unrestrained.

14.6.8.7.3. Some configurations have alternating top elevations of the sheet pile creating a dentil affect. Limited analysis (1 ft. (0.3 m) alternating sheets) has shown the effect on flexural behavior is minimal. Analysis showed that the concrete sections cracked at the lower sheet pile elevation.

14.6.8.7.4. Where sheet piles are alternating multiple sheets at larger elevation differences, it is likely the behavior of the wall is governed by the lower elevation sheets. These details have not been analyzed. In these cases, the capacity of the wall is based on the lowest sheets unless more advanced analysis is performed.

14.6.8.7.5. Some configurations use horizontal reinforcement welded to the sheet pile to provide restraint to the driving and/or resisting leg. These details have not been analyzed and should be evaluated for their age and strength of the welds. Depending on age, modern weldable rebar may not have been available and welds strength may not be reliable. Strength of the weld should meet or exceed the tie bar strength requirements. Where strength is not adequate or welds are unreliable, the unrestrained driving leg capacities gives a lower bound strength.

14.6.8.7.6. Some configurations use shear studs welded to the sheet pile with and without other tie reinforcement. Generally, shear studs have been designed to transfer the beam shear at the concrete steel interface with the intent of creating composite action. Block shear of the studs are checked to prevent concrete block failures. This methodology is partially complete unless it also accounts for the tension in the shear studs from the prying action.

14.7. Interim Risk Reduction Measures. An evaluation may result in a determination that a wall does not meet tolerable risk guidelines. Interim Risk Reduction Measure (IRRMs) may be used to reduce the risk of a system for a short-term basis. IRRMs are actions to reduce inundation risks posed by a dam or levee system that has identified safety issues while more long-term and comprehensive inundation risk reduction and management solutions are being pursued. "Inundation risk" is defined as the likelihood and consequences that may arise from inundation of a leveed area or downstream of a dam. Published guidance for IRRMs for dams is provided in ER 1110-2-1156.

14.8. Long-Term and Comprehensive Risk Management Measures.

14.8.1. General. Long-term and comprehensive risk management measures are those that modify the project to reduce risk. This may be done with structural or non-structural measures. Non-structural measures are those not considered remediations or "fixes" for the identified structural deficiencies of the wall, such as risk communication and emergency action planning. See ER 1110-2-1156 or levee safety guidance for examples of non-structural measures.

14.8.2. The long-term and comprehensive risk management measures covered in this manual are structural measures intended to improve the performance of the wall system under load. This is done by adding or modifying features of the wall system to address failure modes or to promote system resilience and sustainability.

14.8.3. The first step of an action to improve the performance or response of a flood or hydraulic retaining wall is to develop plans for rehabilitation/modification of a project so that it will meet mandatory requirements of this manual. Examples of measures for strengthening existing wall systems are provided in section 14.10.

14.8.4. If modification of a project to meet mandatory requirements of this manual is not practical, a plan may be considered for improvement of the performance of the wall and the levee or dam system sufficiently to reduce risk to a tolerable amount. Section 14.2 provides guidance for acceptance of projects that do not meet the minimum requirements of this manual.

14.9. Structural Risk Reduction Measures. Structural risk reduction measures that address the performance of floodwall and hydraulic retaining walls can be IRRM or Comprehensive. Following are some examples:

14.9.1. Isolate the problem area (for example construct a sub-levee around a feature to reduce head differential).

14.9.2. Construct or improve seepage control measures to retard seepage and reduce uplift, such as toe drains, relief wells, riverside or landside seepage control blankets, and shallow cutoff trenches.

14.9.3. Implement a target grout program specifically for suspected problem area(s) to slow seepage.

14.9.4. Increase overtopping erosion resistance.

14.9.5. Increase erosion protection at waterside toe where necessary.

14.9.6. Lower adjacent embankments until the floodwall can safely withstand design water levels (this may result in more frequent downstream or interior flooding).

14.9.7. Construct landside stability-berm to strengthen weak areas.

14.9.8. Evaluate internal drainage features, such as ponding areas, and consider alternatives such as additional pumps, to address potential issues.

14.9.9. Strengthen concrete or steel components. Information on strengthening walls for improved performance is provided herein.

14.10. Strengthening Existing Wall Systems.

14.10.1. General.

14.10.1.1. Long-term and comprehensive risk reduction measures may result in the need to strengthen an existing wall. Examples of measures to improve performance of common wall systems are provided in the following sections.

14.10.1.2. The costs of strengthening an existing wall should be compared to the cost for a wall replacement to determine the plan with greatest value. The cost for replacement must include the cost for a temporary barrier. Temporary barriers may be needed if operations to modify the wall degrade its ability to provide risk reduction. This may be reduced or eliminated by strengthening an existing wall. See Chapter 13 for more information on temporary protection required during construction operations.

14.10.1.3. After implementation of the improvement measure, re-evaluation of the wall system is required, and all performance modes must be satisfied according to Chapters 7–11. This process may be iterative and may also require multiple strengthening measures.

14.10.2. Strengthening Against Overtopping.

14.10.2.1. Overtopping of walls can occur at flood stages that the wall was not designed to contain. In addition, it can occur at water levels below the top of the wall when non-impulsive or impulsive waves make contact with the vertical wall. A non-impulsive wave results in the wave smoothly being pushed over the top of the wall. An impulsive wave results in an uprushing jet of water.

14.10.2.2. There are several methods to strengthen an existing wall system against overtopping. One method is to permit the overtopping and protect the landside splash zone using armoring such as grouted and/or ungrouted rip-rap or unreinforced/reinforced concrete. Refer to Chapter 12 for more information on armoring. The next method is to add structurally to the top of the wall. Adding to the top of wall will require evaluation of performance modes that are affected by the increased loading. Other modifications may be required to address issues caused by the increased loading.

14.10.3. Strengthening Against Horizontal Movement and Location of Resultant.

14.10.3.1. The most obvious and straightforward method for reducing anticipated movement or increasing stability is the addition of resisting side cover or fill to the wall. The wall must be able to resist lateral loading created by the fill. At some locations additional fill may not be possible due to strength or stability limitations with the fill, real estate limitations, effect on bank stability, or settlement concerns. In these cases, measures to reduce seepage pressure may decrease landward movement or increase sliding stability. These measures are described in section 14.10.5.

14.10.3.2. In areas where earth cover over the waterward end of the heel is deficient, the recommended remedy is the addition of cover. This can only be used when real estate is available and the additional load does not create other concerns. If increased cover or reduction of seepage pressures does not fully alleviate the issue, piles or soil anchors can be used to increase the stability. Other alternatives may consist of adding a heel or toe extension to the wall base for additional stability.

14.10.3.3. For cantilever piles walls (I-walls), if a berm cannot be added to increase passive pressure resistance the only recourse may be to add a footing to create a wall with a shallow or deep foundation. See paragraph 14.10.12.

14.10.4. Strengthening Against Bearing. For shallow-founded wall systems, improving the soil directly underneath the structure through soil mixing may not be feasible. Typical strengthening elements may consist of adding heel and toe extensions or adding deep foundation elements. Sometimes increasing the cover above the toe may also increase the factor of safety for bearing failure. Underpinning via jet grouting may also be an option, but rarely used in floodwall and other hydraulic retaining wall applications. Grout pressures should be carefully controlled when used around existing structures to manage the risk of damage or movement of the structure.

14.10.5. Strengthening to Decrease Potential for Internal Erosion.

14.10.5.1. Reducing the risk associated with internal erosion failure modes on existing walls can be accomplished using the measures described in Chapter 12. These measures control the seepage flows to reduce the likelihood of initiation or progression of the potential failures. Methods to control seepage include lengthening the seepage paths (decreasing gradients), providing pressure relief, filtering flows, or reducing the amount of flow. Controlling seepage flows does not necessarily prevent all seepage flows under a wall.

14.10.5.2. Landside seepage berms are a cost-effective way to lengthen seepage paths and reduce gradients passing under the wall. They can be used when real estate is available, and the weight of the berm does not cause other concerns. Installation of relief wells is also a common and cost-effective way to reduce internal erosion risks. The wells relieve pressures in pervious foundation soil layers to prevent initiation of backwards erosion and piping.

14.10.5.3. Where known seepage flows exist, installation of a filter or a toe drain to prevent movement of material and collection of the flows is also an option. Flow reduction requires preventing the flood waters from entering or passing through the wall foundation. Options include: installation of an impervious blanket that prevents flood waters from reaching a known pervious foundation layer; construction of a cutoff wall (sheet pile, ground improvement, or grouting); or repairs to existing cutoff, such as grouting along sheet pile interlocks.

14.10.6. Improving Global Stability.

14.10.6.1. Generally, the simplest and most cost-effective way to increase global stability is through construction of stability berms. On the landside of the wall, the stability berms act to increase the resisting loads to a global stability failure. Stability analysis will allow for optimization of the width and height required.

14.10.6.2. Where site constraints limit the ability to construct berms, increasing soil strengths or installing structural deep foundation elements may be used in increase global stability. Ground improvement methods, such as deep soil mixing and jet grouting have been used to increase the strength of the soil mass along the slip surface, resulting in improved global stability. Deep foundation elements, such as piles or drilled shafts, are used to resist soil sliding forces and increase global stability.

14.10.7. Addition of Wall Strengthening Elements. When determining the appropriate wall strengthening element, consider the site conditions and wall usage. In some instances, a combination of wall strengthening elements may be used to satisfy design requirements as shown in Figure 14.2. These wall strengthening elements consist of, but are not limited to, use of fiber-reinforced polymers, buttresses and counterforts, increasing wall section thickness, and using tieback anchors. These measures are described in the following paragraphs.

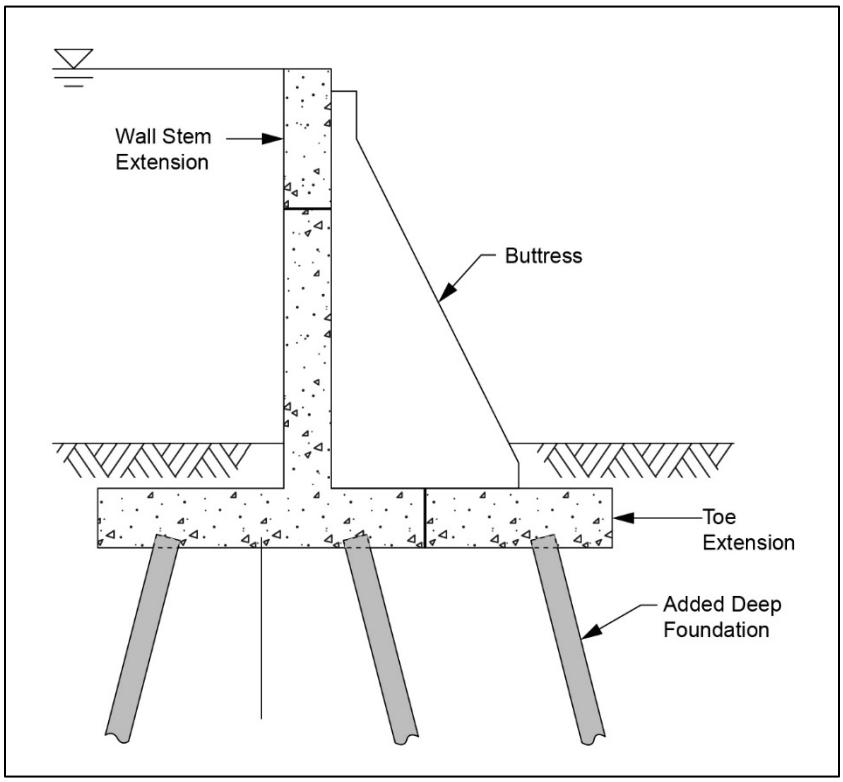

Figure 14.2. Addition of Multiple Strengthening Elements

14.10.8. Wall Strengthening with Fiber Reinforced Polymer.

14.10.8.1. For strengthening existing floodwalls and other hydraulic retaining walls, carbon fiber reinforced polymer (CFRP) is the preferred FRP. Other commonly found FRPs are glass fiber reinforced polymer (GFRP) and aramid fiber reinforced polymer (AFRP). Use of FRP is limited to regions of the structure where additional flexural strength is required. However, FRP should not be used if additional stiffness is required. Additionally, FRP should not be used to enhance shear strength unless the section can be completely wrapped.

14.10.8.2. When strengthening using FRP, the FRP should be designed to supplement the existing reinforcement in order to increase the overall strength. After the FRP has cured, a protective coating should be applied to mitigate water intrusion into the interface between the FRP and concrete. Research has shown that the presence of moisture can encourage plasticization and deteriorate the resin, thereby decreasing the bond strength. Strengthening using FRP must follow the requirements in ACI 440.2R in addition to the requirements in this manual. A sketch showing an example of FRP used to reinforce a wall stem is shown in Figure 14.3.

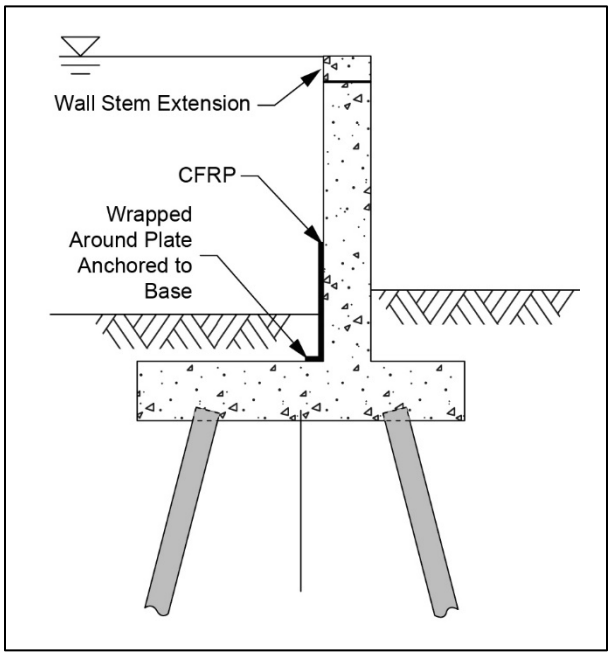

Figure 14.3. Addition of FRP to Stem to Increase Flexural Strength

14.10.9. Wall Strengthening with Buttresses and Counterforts.

14.10.9.1. Buttresses are typically in compression and are preferred over the use of counterforts for strengthening floodwalls. Counterforts are typically in tension and are preferred for earth retaining walls where the flow of water on the resisting side is not to be impeded. Either may extend the full height of the wall, or partially, depending on strength requirements. When buttresses and counterforts extend the full height of the wall, the wall stem can be analyzed as a one-way slab and the buttress/counterfort can be analyzed as a composite "T" section. The stem can also be analyzed as plate fixed on three sides between the base and the buttresses or counterforts.

14.10.9.2. For maximum economy, the wall stem can be analyzed as a three-sided plate. When buttresses/counterforts are not required by analysis to extend the full wall height, then special care is required when analyzing the composite wall system. When adding buttresses/counterforts to shallow-founded walls, it may be necessary to add a toe/heal extension.

14.10.10. Wall Strengthening by Increasing Section Thickness. Increasing the section thickness is another method to strengthen a wall. This typically encompasses scoring the existing wall face, adding a bonding agent, and adding adhesive anchors. When using this method, the increased thickness should be located on the compression face of the wall unless used in combination with anchors.

14.10.11. Walls Strengthening with Anchors. Anchors may be used to improve the stability of an existing wall system when the anchors can be successfully placed and supported within soil or rock. The anchors may be installed through the stem of a wall to increase resisting lateral forces or through the base to increase vertical downward forces. For lateral anchors, post-tensioned anchors should generally be used through the stem to reduce the deformation needed to engage them. Anchors installed vertically through the base are post-tensioned to increase vertical forces for sliding resistance or to move the resultant to a location that meets minimum requirements. Additional guidance for anchoring existing structures to improve stability is provided in EM 1110-2-2100.

14.10.12. Strengthening of Shallow-Founded Wall Foundations. A shallow-founded wall foundation may be strengthened by increasing the wall footing width or by adding deep foundation elements. A deep foundation may need to be added if there is insufficient space to increase the width of a foundation or if there are settlement issues. If a deep foundation is required, a minimum of one landside row and one waterside row should be added. Analyze the structure monolithically and design the interface between the existing and new components accordingly.

14.10.13. Strengthening of Walls with Deep Foundations. Walls with deep foundations can be strengthened by adding pile rows. Figure 14.2 shows a combination of wall stem extension, buttress, and deep foundation for the purpose of raising the design elevation and strengthening an existing deep-founded floodwall.

14.10.14. Strengthening of Cantilever Pile Wall Foundations.

14.10.14.1. Cantilever pile walls can be improved for stability and lateral deflection by adding fill on the landside to reduce the height of the wall or by adding foundation elements. A footing can be added to the wall to create a wall with a shallow or deep foundation. Shallow-founded wall stability analysis does not include sheet pile elements. Therefore, the footing for a shallow-founded footing must be stable without including the sheet pile except as a seepage management element.

14.10.14.2. Adding deep foundation elements may allow the sheet pile to be used as a stability element. Adding one row of piles creates a braced pile wall as described in Chapter 2. If the sheet pile is not able to withstand vertical loads created by this system, two or more rows of piles in an added footing may be used to create a wall with a deep foundation.

14.11. Mandatory Requirements. Walls under evaluation must meet the minimum requirements of this manual unless a risk assessment is performed.

Chapter 15
Operation, Maintenance, Repair, Rehabilitation, and Replacement

15.1. Introduction.

15.1.1. Walls covered by this manual are generally expected to perform over project lives of 100 years or more. Various actions can be taken to extend the service life of walls when properly implemented. Successful wall maintenance, repair, or rehabilitation is critical to the economical and reliable operation of wall systems. For increasing strength of an existing wall for risk reduction (strengthening), see Chapter 14, Evaluation of Existing Walls.

15.1.2. Inspection and maintenance activities are intended to keep walls in good condition and capable of performing as designed. Repair entails those activities of a localized nature that maintain the wall in a well-kept condition. This includes the replacement or restoration of damaged or worn-out individual wall components. Rehabilitation refers to a set of activities that are systemic in nature and necessary to bring a deteriorated wall system or its components back to or near their original condition. Replacement occurs when a wall system, or portion thereof, is replaced in its entirety, either with a similar or different wall system.

15.2. Risk Considerations.

15.2.1. Risk-informed decisions guide the maintenance, repair, rehabilitation, and replacement processes over the entire life-cycle of the structure. While these activities are often viewed as routine procedures, each can introduce risk or fail to reduce risk, if the risks are not recognized and accounted for during the planning and execution of these tasks.

15.2.2. Background. Maintenance, repair, rehabilitation, and replacement activities should be conducted in a manner that do not create additional risk for the wall or system. In other words, the opportunity for failure should not be increased due to work performed to maintain, repair, rehabilitate, or replace a wall. This includes correcting both the deficiency and its underlying cause.

15.2.3. For example, if failure of a wall water stop is identified through an inspection, then not only should the defective connection be replaced, but the replacement component and installation procedure should be designed to minimize the probability of reoccurrence. Or, if a wall anchor is deteriorated to the extent that replacement is required, the installation of the new anchor should not increase the probability of failure due to internal erosion.

15.2.4. Potential Failure Modes. Each of the PFMs described in Chapter 3 may lead to a maintenance, repair, or rehabilitation requirement. During the inspection process, potential failure modes should be considered, such as strength of structural elements, rotation, sliding, bearing, global stability, internal erosion, and settlement. Some inspection techniques for these basic wall failure modes is included. Additional considerations should be given to special wall components or items not covered in this manual.

15.3. Inspection.

15.3.1. Role of Inspections. Inspections play a critical role in the operation, maintenance, repair, rehabilitation, and replacement process. During the life of a wall, inspections are performed in order to assess and document the physical condition of the wall system, monitor the performance and changed conditions, and to inform corrective actions and risk management.

15.3.2. Examples of events that may make special inspections necessary include: periods of prolonged high water; impacts from vessels or debris; earthquake events; realization of previously unaccounted for loading; changes in other design assumptions; excavations or other construction activities adjacent to walls; and other such special situations. A determination of areas which may be weak or critical should be made.

15.3.3. Inspection for Failure Modes and Signs of Distress.

15.3.3.1. PFMs. Wall inspections should be conducted so that each PFM is detected if present and visible. See Chapter 3 for descriptions of PFMs for each wall type. The following paragraphs provide information for inspection of some specific failure modes. Signs of distress due to aging and general deterioration should be documented according to USACE guidance.

15.3.3.2. Inspection Limits. The physical limits of the inspection should include the extent to which any signs of distress relating to a PFM would be detectable. Examples of distress include cracking in soil from global instability or signs of seepage and piping. The wall and adjacent ground surfaces are included in the inspection.

15.3.3.3. Inspection of Strength of Structural Elements.

15.3.3.3.1. For concrete structures, large cracks and excessive deflections may indicate structure failure. Cracks resulting from overstressed structural elements should be distinguished from hairline cracking that may be a result of temperature and shrinkage forces. Large cracks resulting from overstressed elements will be observed in tension zones of high bending moment regions or where there is direct tension in the member. Cracks in overstressed elements indicate that the rebar has strained to a point of yield and permanent deformation of the rebar has occurred. Continued straining of the rebar will lead to ultimate failure.

15.3.3.3.2. For wall stems with soil backfill, the tension zone of the high moment region is below grade and cracking may not be visible.

15.3.3.3.3. Cracks in concrete structural elements should be evaluated by size, location, and changes over time to determine if critical. Additional guidance on concrete crack evaluation can be found in ACI 224.1R.

15.3.3.3.4. For anchored walls, wall anchors should be inspected routinely for loose or broken anchors. Loose anchors are generally detectable from loose nuts. Additional non-destructive testing methods, such as ultra-sonic testing, may be used to determine the extent of corrosion or the location of cracking. Steel members may show signs of buckling where bent or deformed in high compressive stress regions. In addition, cracking in steel or other materials are signs of excessive tensile stresses. Cracks in steel structures are considered critical.

15.3.3.3.5. Corrosion. Metal elements should be inspected for corrosion. Corrosion can lead to loss of section and strength of a structural element. See EM 1110-2-6054 for additional information on the inspection of metal structures.

15.3.3.3.6. Steel Sheet Piles. For steel sheet pile walls, methods of inspection usually include visual inspection, magnetic particle inspection, ultrasonic inspection, radiography, and in some cases destructive testing. Typically, sheet pile structures are visually inspected, relying heavily on the inspector's experience and knowledge. Small sample sections of the wall may need to be excavated to expose the upper portion the sheet pile that is most likely to be affected by corrosion. Ultrasonic measurements have been used to determine the remaining thickness of steel sheet piling.

15.3.3.3.7. PVC Sheet Piles. Any cracks, damage, deep scratches, chemical or UV deterioration, interlock separation, and any signs of vandalism should be documented.

15.3.3.4. Inspection of Rotation. Wall rotation is generally a concern for shallow-founded gravity walls and cantilever pile walls.

15.3.3.4.1. Excessive rotation may be observed by vertical wall surfaces that are out of plumb or show signs of abnormal tilt (beyond design conditions). Larger relative separation may be observed at the top of the wall compared to the bottom of the wall stem at monolith joints. Where there is soil backfill, cracking in the backfill parallel with the wall alignment may be present due to mobilization of the active wedge. Additional loss of material may be present due to gaps developing below the base of the wall.

15.3.3.4.2. For floodwalls, overturning would only be observed during or after a high-water event. Some walls move initially while compaction pressures are relieved and active pressures develop. Signs of rotation must be observed over time to verify that the failure mode is progressing.

15.3.3.4.3. Cantilever Pile Walls. Sustained post-flood deflections of cantilever pile walls at the ground level should be measured and evaluated for performance. Where wall deflections are beyond design deformation limits, distress should be fully documented and reported.

15.3.3.5. Inspection of Sliding. Wall sliding may be observed by lateral translation of a wall section or monolith. Bulging of the soil on one side and cracking or depressions on the other side may be present. Areas in which movement of a straight section of monoliths or differential movement between any two monoliths is greater than expected will be considered critical.

15.3.3.6. Inspection of Bearing. Signs of bearing failure may be similar to signs of rotation where bearing is occurring at the toe of the wall. In addition, small ridges or bulging of soil may be observable beyond the wall toe.

15.3.3.7. Inspection of Global Instability. Slides in an embankment, in combination with rotation and/or translation of the wall, may be signs of global instability failures. In addition, cracking, sloughing, or bulging in soil on either side of the wall may be present. Settlement and/or rotations may also be present.

15.3.3.8. Inspection of Internal Erosion. Standing water, flowing water, erosion, scour, and sand boils may be evidence of active seepage. These areas should be investigated thoroughly and seepage control of pressure relief provided, if needed. When seepage velocities increase, additional foundation materials will be carried away and piping can develop. This may lead to the loss of a damming surface and breach of flood protection.

15.3.3.8.1. For deep-founded walls, settlement of surrounding earth may lead to seepage and piping below the concrete structure. This may lead to a breach of the flood protection.

15.3.3.8.2. The failure of a toe drain or relief well system may lead to excessive seepage, excessive uplift, movement of foundation materials, and loss of wall function. Toe and trench drains should be regularly checked to monitor underseepage and for signs of piping during flood events. Drains should be checked for foreign materials and sediment that may indicate the loss of backfill or foundation material. Pipes should be inspected on a routine basis. Guidance for inspection, repair, and replacement of pipes is provided in EM 1110-2-2902.

15.3.3.8.3. For urban floodwalls, excessive flow in gravity drains and sewers may be signs of excessive seepage under a wall, through underground pipe joints, or even the collapse of an underground pipeline near the wall.

15.3.4. Inspection of Settlement.

15.3.4.1. General. Settlement may lead to the loss of the designed level of protection for floodwalls, cracking of the wall, damage to concrete joints, and/or damage to anchors. Settlement can be measured by surveying monuments on walls over the life of the structure. Visually sighting along the length of the wall's top edge may allow observation of excessive uniform or differential settlement of walls. Noticeable changes in soil backfill levels, diagonal concrete cracking, and loose or broken wall anchors or connections may be additional signs of excessive settlement of the wall or of the adjacent soil.

15.3.4.2. Foundation Voids or Depressions. All unequal settlements should be investigated. In particular, unequal settlements adjacent to structures, such as pump stations and gate wells, should be subject to further examination. Usually one or two monoliths (or a portion of one monolith) are constructed on compacted fill in these areas. Initial unequal settlement may cause the first monolith to bridge or wedge between the second monolith and the other structure. Further consolidation of the fill leaves a dangerous void or voids under the base. Only underground examination will reveal the presence of these voids.

15.3.5. Inspection of Scour. Scour adjacent to walls should be monitored and corrected if the stability of a wall is affected. Sonar or other methods of detection may be necessary where portions of the structure are not visible due to normal high-water levels against the wall. For walls adjacent to navigable channels, vessel operations can cause scour below the water line. PFMs should be evaluated to determine if corrective action is necessary where scour is present. For example, scour on the protected side of sheet pile floodwalls or at the base of an earth retaining wall will reduce the passive soil resistance and wall stability may be affected.

15.3.6. Inspection of Post-Tensioned Tieback Walls. In addition to the short-term monitoring described in section 11.12, long-term monitoring of anchored walls can be specified for anchored systems that require stringent displacement control or anchored systems that are constructed on potentially marginal ground. This monitoring can involve instrumentation, including strain gauges for anchors and vertical wall elements, inclinometers, and settlement monitoring devices that measure ground movements.

15.3.7. Inspection and Maintenance of Relief Wells.

15.3.7.1. EM 1110-2-1914 covers inspection, maintenance, and evaluation of relief wells in detail. Relief wells require a certain amount of nominal maintenance to ensure their continued and proper functioning. Any trash or obstruction in the well or well guard should be removed immediately. Sand or other materials that may have accumulated in and around flap gates obstructing proper functioning of the gates, should be removed. Outfall ditches, bank slopes, or berms should be properly maintained in the vicinity of horizontal outlet pipes. The area in the immediate vicinity of the wells should be kept free from weeds, trash, and debris. Mowing and weed spraying should be extended at least 5 ft. beyond the well and the ground shaped and maintained for inspection and servicing of the wells.

15.3.7.2. The quantity of relief well flows should be measured during high-water events and compared to design. Because the efficiency of relief wells may deteriorate with time due to corrosion or bacterial incrustation, monitoring and maintenance are required to assure that the relief well system performs acceptably for the project life. To assess possible well deterioration, wells should be periodically pump-tested, and the specific capacity (flow/drawdown) should be compared to the initial pump test results. The potential head at the well line is also used to calculate uplift pressures on the wall. This value obtained as part of the well design procedure in EM 1110-2-1914. If considered inadequate, additional relief wells may be installed.

15.3.7.3. It is common for relief wells to experience a gradual loss in efficiency with time. The reduced efficiency is generally determined as a percentage loss in specific capacity from the specific capacity determined with pumping tests at the time of installation. This measure of increased well losses can be used to evaluate the resulting higher landside heads. Thus, reduced well efficiency will result in hydrostatic heads larger than those anticipated in the design. The major causes of reduced specific capacity with time are mechanical, chemical, and biological.

15.3.7.4. Relief wells may malfunction for a variety of reasons including vandalism, breakage, or excessive deformation of the well screens due to ground movements, corrosion, or erosion of the well screen. Inspection during high-water events should include observation of the outflow for cloudy water and for depressions around the well, as both can be indicative of broken screens and loss of foundation soil into the well. A damaged riser or screen that allows soil movement into a well requires lining or replacement.

15.3.8. Inspection of Joints and Waterstops.

15.3.8.1. Joint Movements. Joints referred to in this section are those having a waterstop embedded in the interior or exterior of the section. Joints may be either along straight runs of wall or at changes in wall alignment.

15.3.8.1.1. Waterstops may become torn from excessive relative movements along any or a combination of the three orthogonal axes of the wall: lateral, longitudinal, and vertical. Common causes of movements include repeated wall loading, uneven settlement, thermal movements, wall restraint or prying against other structures, and the failure modes previously listed. A common location of relative joint movements is at 90-degree reentrant corner monoliths (concave on waterside). Another common location is where wall monoliths terminate at other structures such as levees, pump houses, gate wells, and gate abutments.

15.3.8.1.2. A full-size floodwall test was performed by the Ohio River Division (ORD) in 1955 on four different soil founded T-wall sections. The resultant movement of the 90-degree reentrant corner monoliths (RCM) was diagonal (combined lateral and longitudinal) and caused the joints between RCM bases and adjacent test wall bases to open. Under repeated loading, the ratio of cumulative lateral movement of the corner monoliths to lateral movement of adjacent straight walls varied from 1:4.0 to 1:1.8 (RCM: Straight Monolith). This differential movement from repeated loadings caused tearing of the copper waterstop and led to an internal erosion failure mode of the test wall system.

15.3.8.1.3. If the measured or expected joint opening is greater than the allowable for a given waterstop, the joint should be further evaluated and a risk-informed corrective action taken. Some joints below ground may need to be excavated to determine the adequacy of waterstops, especially at 90-degree reentrant corner monoliths.

15.3.8.2. Waterstops. Joints with torn or parted waterstops should be considered critical. Torn waterstops may not be noticed during an inspection, particularly if the joint has not spread open. If sufficient differential movement has occurred, based on the characteristics of the waterstop, it should be assumed that the waterstop is torn. The amount of tearing allowed should be based on factors causing piping; however, this is very difficult to predict. In the above cases, if a total differential movement (transverse and longitudinal combined) is greater than the design function of the waterstop occurs, the waterstop should be considered torn unless shown otherwise.

15.3.8.3. Foreign Material in Joints. The presence of inflexible foreign material, such as grout and pieces of aggregate, in expansion joints can cause damage and serviceability concerns, such as leakage and concrete spalling.

15.3.8.3.1. Grout, particularly if located within the fold of the waterstop, destroys the flexibility of the waterstop. The occurrence of differential movements can allow the waterstop to be torn. Grout and pieces of aggregate anywhere in the joint prevent the joint from fulfilling its expansion function.

15.3.8.3.2. Foreign material in the joints becomes particularly obstructive at protruding angle locations (where the wall appears convex when viewed from the river). Here, the wall may be tilted waterward by a wedging action upon expansion of adjacent monoliths in hot weather. This wedging of adjacent monoliths at changes in alignment may produce excessive flexure in the stem sufficient to cause damage or even failure. The same tilting can occur at reentrant corner monoliths, however, there the tilting is landward and the reinforcing is more adequate to resist the stress.

15.3.9. Instrumentation & Monitoring. During routine inspection and maintenance, instrumentation should be checked to verify that the wall is performing as intended. Instrumentation should be checked more frequently during a flood event and upon observing any new signs of distress.

15.3.10. Other Inspection Items.

15.3.10.1. Basements and Other Excavations. Basements or other excavations may have been dug on either side of and adjacent to the wall after the original design and construction. The seepage aspects and the foundation stability of these walls should be investigated.

15.3.10.2. Backfill Drains of Earth Retaining Walls. Backfill drains should be regularly inspected for adequate flow. Clogged drains may lead to larger back-fill pressures then were assumed for design. This may lead to wall sliding, rotation, or other PFMs. Examples of walls with backfill drains include dam chute walls, stilling basin walls, and other hydraulic retaining walls.

15.4. Operation.

15.4.1. Operation and Maintenance Manual. The O&M manual provides guidance and instructions to project personnel for proper operation and maintenance of the system. The O&M manual contains a narrative summary of the critical system features. These features include design features, equipment operating and testing procedures, gate operations and testing requirements, emergency operations, maintenance and inspection procedures, and instrumentation requirements. The O&M manual is prepared during the construction phase and is updated as features or requirements change according to O&M policies outlined in ER 1110-2-401, ER 1130-2-500, and ER 1130-2-530.

15.4.2. Operations of a wall system are those operations necessary for the safe and efficient functioning of the project to produce the benefits set forth in the project authorization. Some wall operations may involve active participation, such as constructing a removable wall system, operating a closure gate, or operating other components attached to the wall system. However, in general walls have limited active operational systems and act as a passive system. For such systems, routine maintenance is important for ensuring the wall can continue to meet the demand requirements as designed to ensure proper functioning.

15.4.3. Instrumentation Data Collection and Presentation. Initial readings should be made on all instrumentation subsequent to installation so that an initial data base is established. The person collecting the data should be experienced with the instrumentation devices in use. The frequency of data collection should depend on an established monitoring schedule and escalate during critical loading conditions or increased wall deflections. Profiles and alignments are typically collected on a yearly basis while electronic devices should be read more frequently.

15.4.4. Weather conditions and any apparent deformities at the site should be recorded. Data should be processed and evaluated by qualified personnel and reviewed by higher authority. Data should be displayed graphically so that various relations and trends can be readily seen. Data should be processed as soon as practical from the time it is collected in order to identify any abnormal readings.

15.4.5. Construction Adjacent to Existing Walls.

15.4.5.1. Additional observations and monitoring should be considered when construction activities are being performed adjacent to an existing wall. Examples of this are operation of heavy equipment, driving of piles, surcharge loading, or excavation.

15.4.5.2. Driving piles and operation of heavy equipment may result in vibration induced settlement dependent on the foundation soil types and stratigraphy. Surcharge loading may also result in settlement, lateral displacement of a wall, or even wall failure. Excavation activities near a wall could lead to a reduction in the soil resistance to particular performance failure modes. In the particular case with anchored walls, excavation of soil around an anchor or through an anchor component could result in failure of the anchor.

15.4.6. Walls that are part of a levee or dam system are considered during emergency planning and incorporated into the emergency action plan (EAP) according to USACE guidance for the system type.

15.4.7. Modifications to the Wall Project.

15.4.7.1. During the service life of a wall project, modifications may be proposed because of changes to land use adjacent to the wall. These changes can include modifications to, additions of, or removals of ground surfaces, utilities, paths, roads, bridges, railroads, buildings, vegetation, etc.

15.4.7.2. The proposed modifications should not increase the incremental project risk. The engineer will review these modifications for compliance with the requirements of this manual and other applicable USACE criteria.

15.4.7.3. All probable failure modes that are affected by the proposed modification should be assessed. Affects to main wall features, toe drains and other drainage features, scour protection, relief wells, surface drainage, etc. should be assessed.

15.4.7.4. After the modification, access should be maintained for O&M, monitoring, and emergency response during operation of the wall project. Specific requirements for access should be determined on a case by case basis.

15.5. Maintenance.

15.5.1. Maintenance tasks are routine and planned in advance. Some common wall maintenance tasks include sealing concrete cracks, painting steel components, flushing drains, monitoring joints, and removing debris and vegetation from walls. Structures that have sustained major damage from storms or have deteriorated to a point at which normal maintenance is impractical may require repair or total rehabilitation.

15.5.2. Concrete Walls. See EM 1110-2-2002 for more detailed information on maintenance of concrete.

15.5.3. Vegetation and Encroachments. Walls should be readily accessible by equipment and personnel for inspections and for reliable operation and maintenance over the life of the structure. The possibility for long-term saturation of levee and floodwall foundations in combination with O&M requirements makes it necessary to exercise caution in the design of landscape planting and vegetation management on or adjacent to these structures. Considerations should be given to root zones of vegetation and their impacts on the entirety of the wall system, including drains, foundations, cutoffs, the effects of overturned trees, etc. See Chapter 12 for further guidance on required limits for vegetation and encroachments.

15.5.4. Flood Fighting. See the most recent guidance in flood fighting handbooks, Levee Owner's Manual, or other local district guidance. PFMs for each wall type should be considered during flood fight operations, structural inspections, and condition assessments.

15.6. Repair and Rehabilitation.

15.6.1. General. Repair and rehabilitation may address the same wall components; however, rehabilitation will generally be systemic in nature, correcting a deficiency in the overall wall system. Some examples of items that may be addressed in either repair or rehabilitation efforts include the following:

15.6.1.1. Correcting broken or torn waterstops;

15.6.1.2. Joint sealing;

15.6.1.3. Concrete spall patching;

15.6.1.4. Concrete resurfacing;

15.6.1.5. Crack injections;

15.6.1.6. Restoring scour protection;

15.6.1.7. Application or reapplication of corrosion protection;

15.6.1.8. Replacement of broken or deteriorated anchors;

15.6.1.9. Repair of damaged toe drains or relief wells; and

15.6.1.10. Grading of adjacent land for proper drainage.

15.6.2. Repair and Rehabilitation Measures. The following repair and rehabilitation measures for wall systems are provided for information. Their use is not mandatory if more feasible or economic measures can be devised for the individual problems involved. Repair and rehabilitation measures should be assessed for each wall system for their applicability.

15.6.2.1. Additional Landside Cover for Floodwalls. One method for reducing horizontal movement or increasing sliding stability of floodwalls exhibiting distress is the addition of landside cover or fill to the wall (see Figure 15.1). At locations where additional landside fill is not feasible or possible due to highways, railroads, and other structures, measures to reduce seepage pressure may be employed to decrease landward movement or increase sliding stability. These measures are described section 12.8.3. Consideration should be given to the effects of new fill on the stability of the wall system prior to implementation.

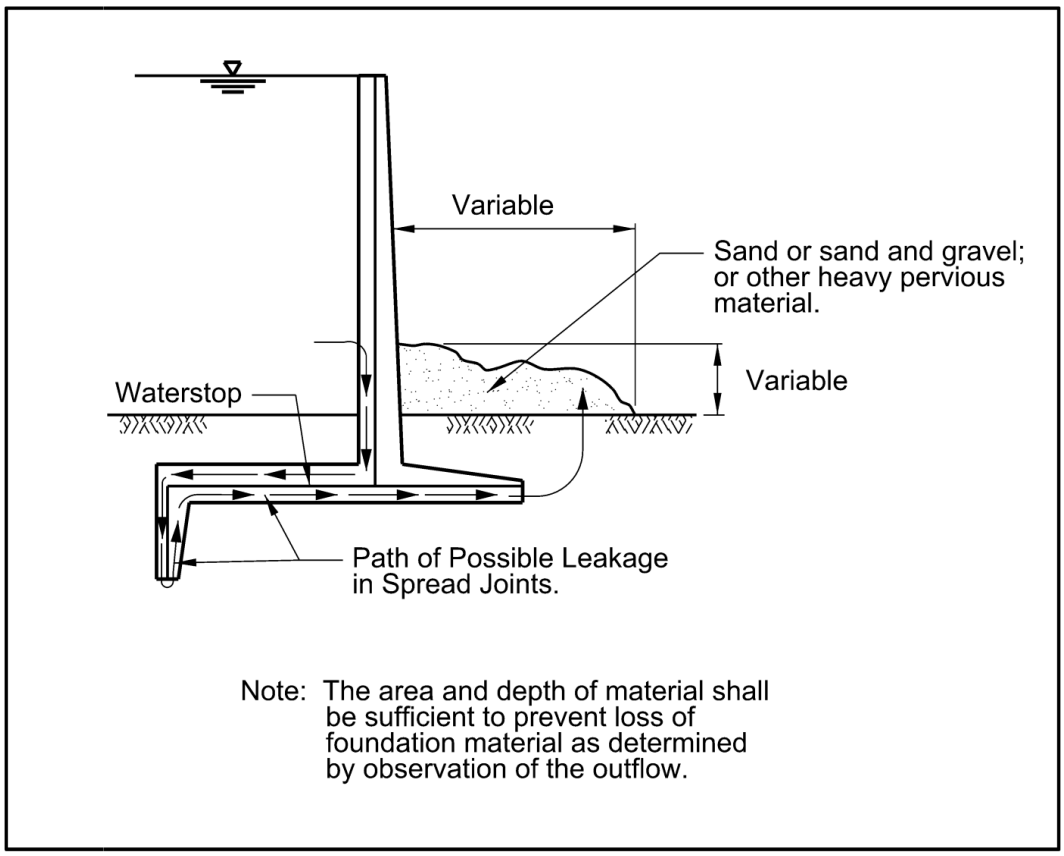

Figure 15.1. Emergency Measures to Control Piping

15.6.2.2. Additional Waterside Cover. In areas where earth cover over the waterward end of the heel is deficient, the recommended remedy is the addition of cover. Consideration should be given to the effects of new fill on the stability of the wall system prior to implementation.

15.6.2.3. Supplemental Waterstops. The supplemental waterstop schemes shown in Figure 15.2 through Figure 15.7 are a means of repairing waterstops, open joints, and earth cracking over the key because of thin heel cover or excessive movements.

15.6.2.3.1. The sheet piling shown in the scheme in Figure 15.3 is necessary to provide additional cutoff. This compensates for the loss of part or all of the normal seep path between earth and the waterside face of the key. The pile cap should be placed at the bottom of the key. This limits excessive leakage of water around the upstream and downstream ends of the pile curtain as the wall moves landward under load.

15.6.2.3.2. One possible method of repairing a torn waterstop is to seal the opening below the existing waterstop in the base by injecting cement grout. The opening above the waterstop in the base could be sealed with an elastic sealant, such as polysulfide elastomer.

15.6.2.3.3. A second repair scheme uses an external waterstop, as shown in Figure 15.5. This scheme uses a 3/8 in. (9.5 mm) natural rubber strip (40 to 50 A Durometer) with ¼ in. (6 mm) stainless steel keeper plates bolted to the face of the wall. This repair generally extends from the tops of the walls down to the bottoms of the riverside keyways. This scheme has been used successfully in the Louisville District.

15.6.2.4. Other Problem Areas. Foreign incompressible material in the joints should be removed by the most expedient method. Riverside excavations near the heel should be backfilled with impervious material if it is suspected that dangerous seepage conditions may occur during high water.

15.6.2.5. Overtopping Scour Control. For coastal walls or other walls where scour has removed landside cover, consideration should be given to placing erosion protection over the restored cover within a distance of 20 ft. (6 m) from the wall stem.

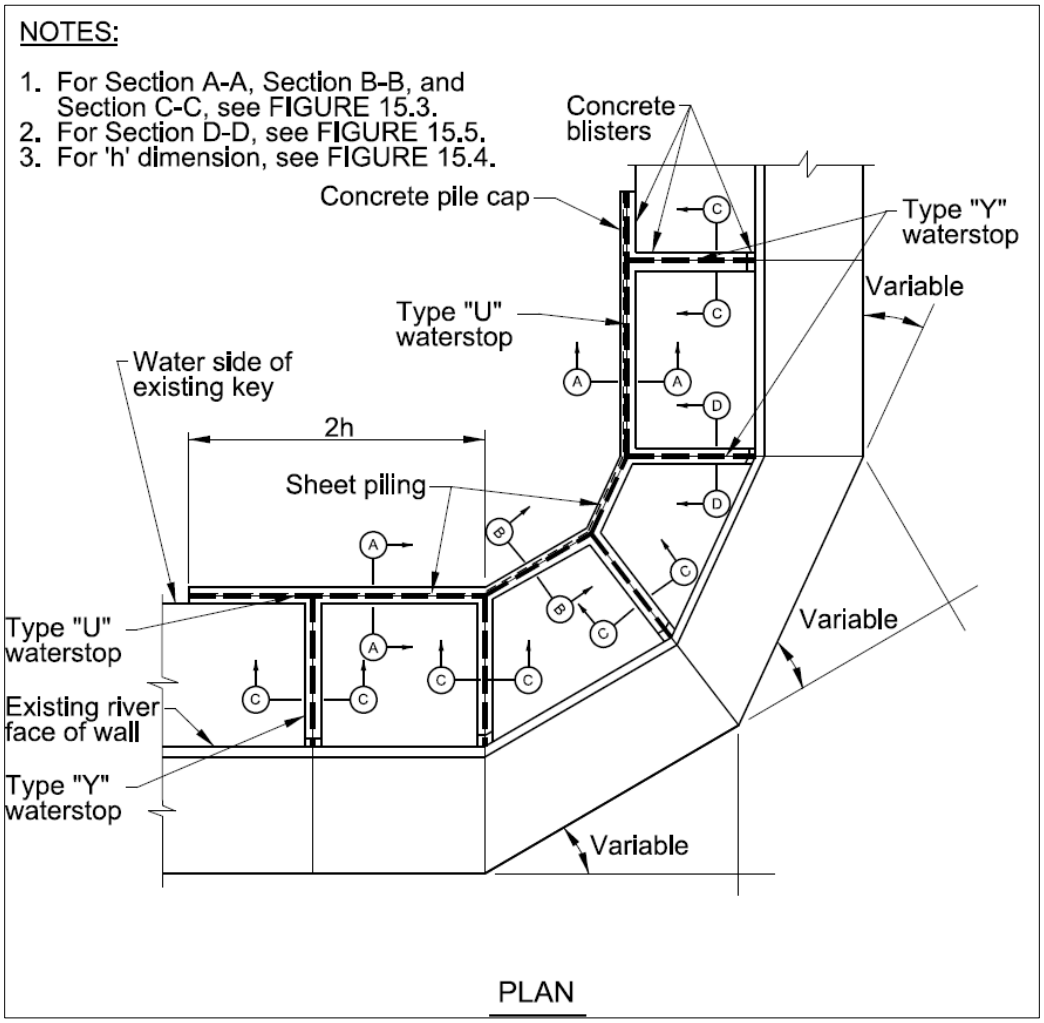

Figure 15.2. Permanent Waterstop Repair Measures

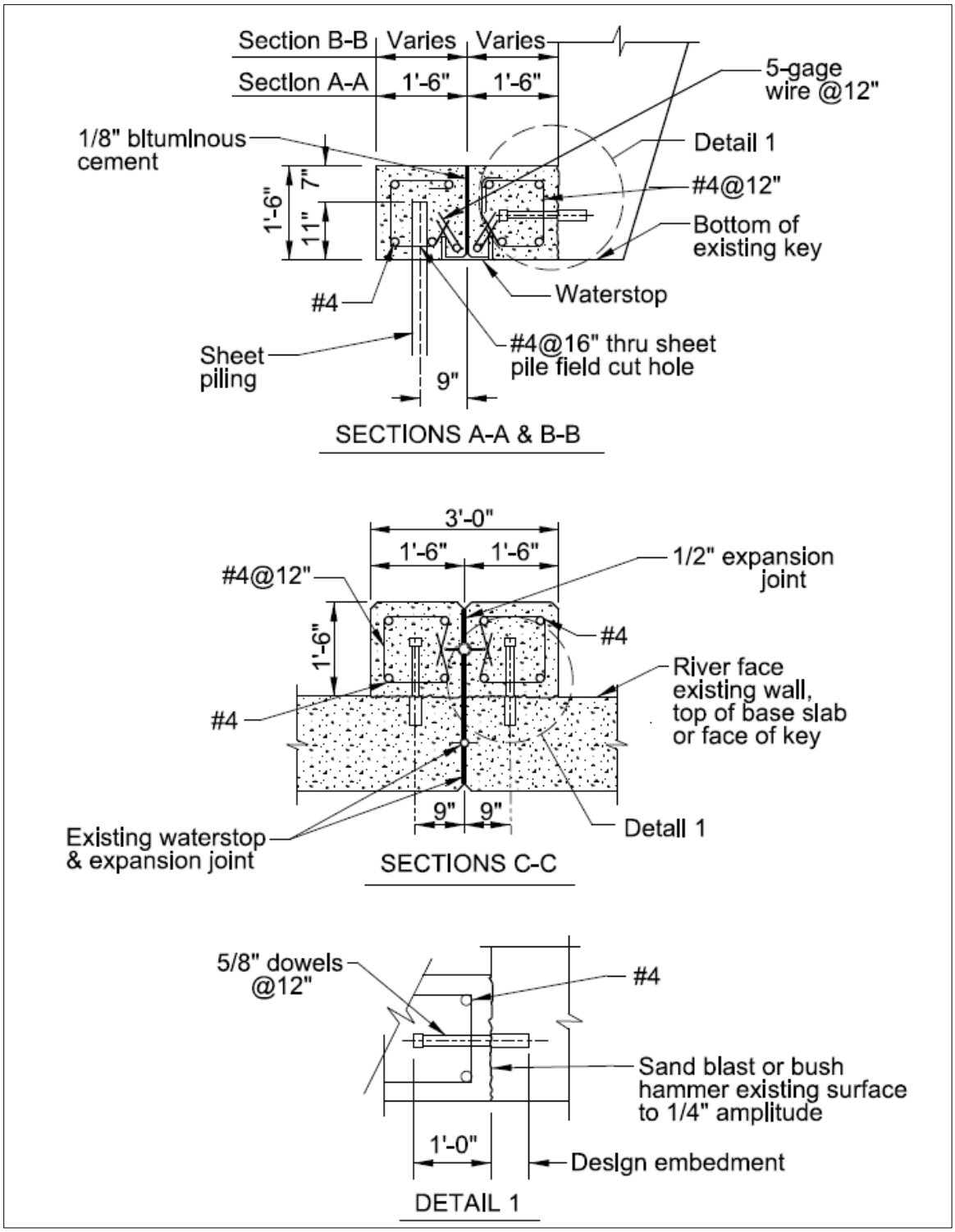

Figure 15.3. Permanent Water Stop Repair Measures
(See Appendix A for English to Metric Conversions)

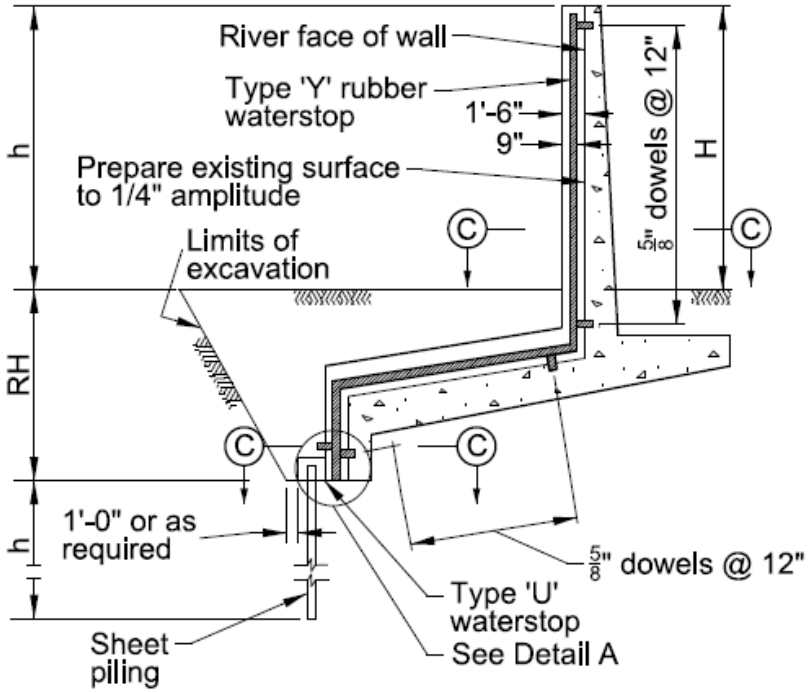

TYPICAL SECTION AT JOINTS

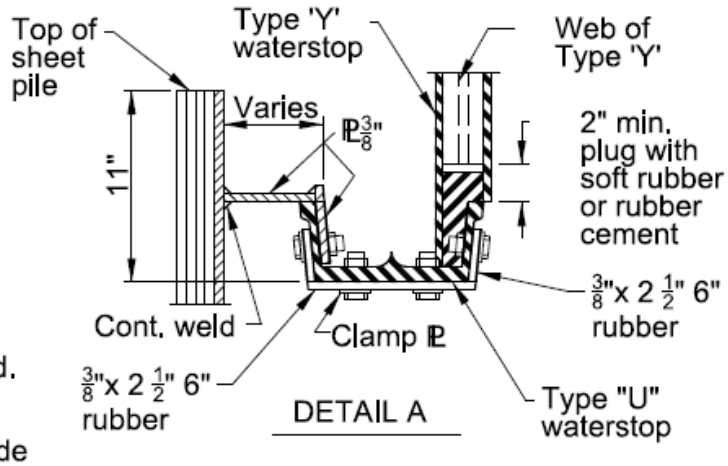

DETAIL A

Notes for DETAIL A:

1. 3/8 x 2 1/2" rubber strips are for use only at change in direction where type 'U' stop must be cut on a bias and re-joined. On straight runs these strips need not be used.

2. Bulbs of type 'Y' stop are shaved down to web to provide a flat surface for bolting to inside of type 'U' stop.

3. All rubber surfaces in contact with each other are coated with rubber cement.

Figure 15.4. Permanent Waterstop Repair Measures
(See Appendix A for English to Metric Conversions)

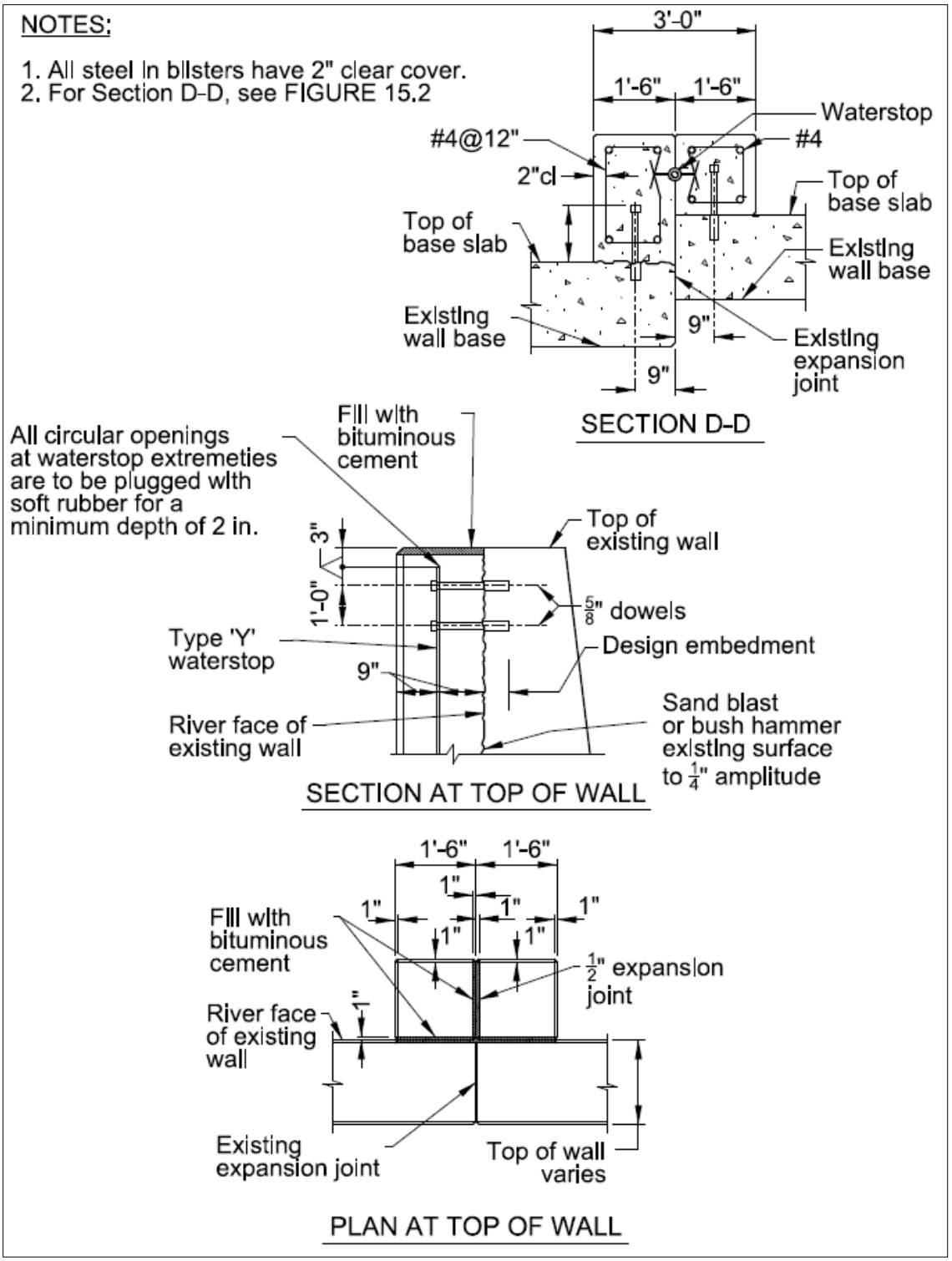

Figure 15.5. Permanent Waterstop Repair Measures
(See Appendix A for English to Metric Conversions)

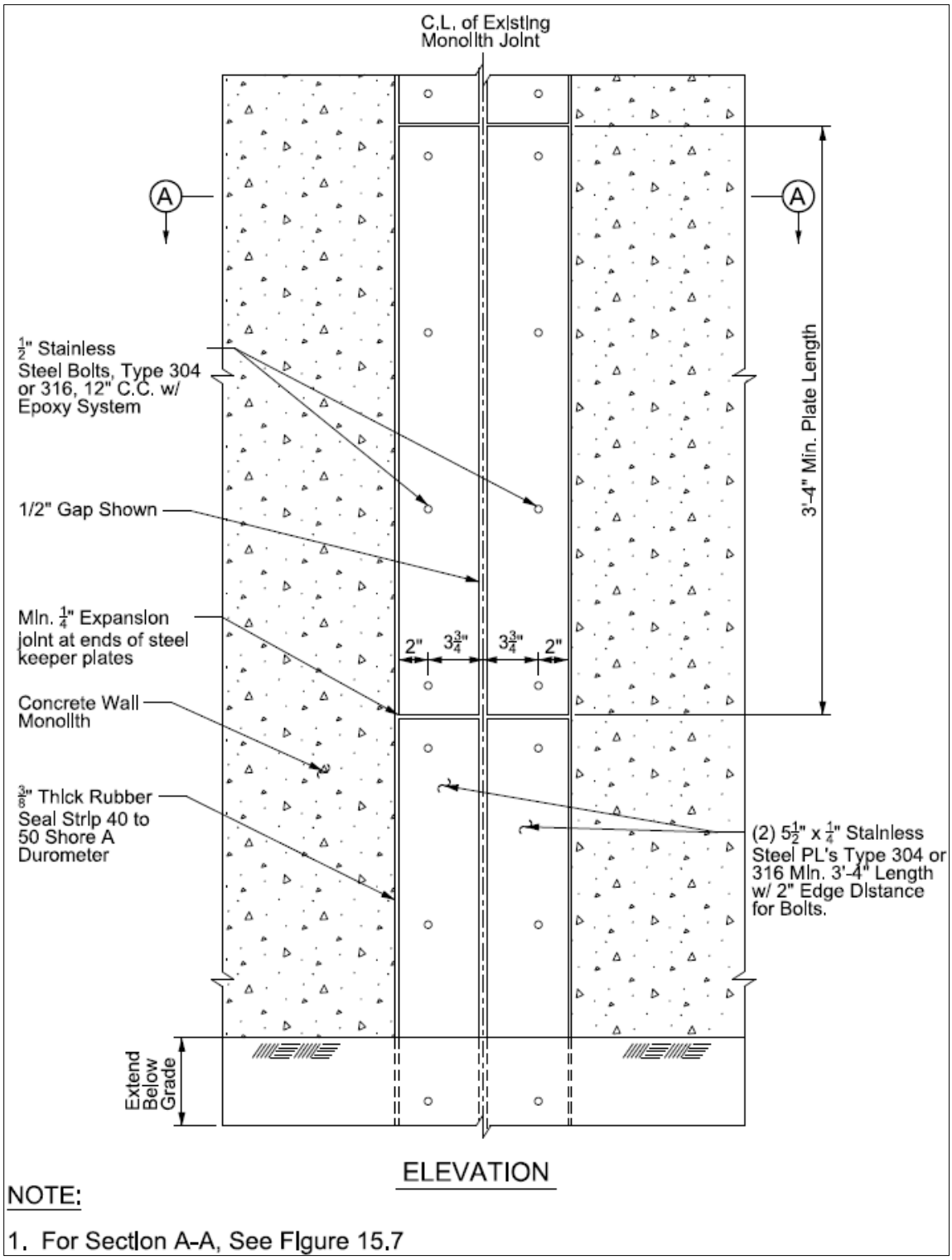

Figure 15.6. Waterstop Repair Using External Waterstop
(See Appendix A for English to Metric Conversions)

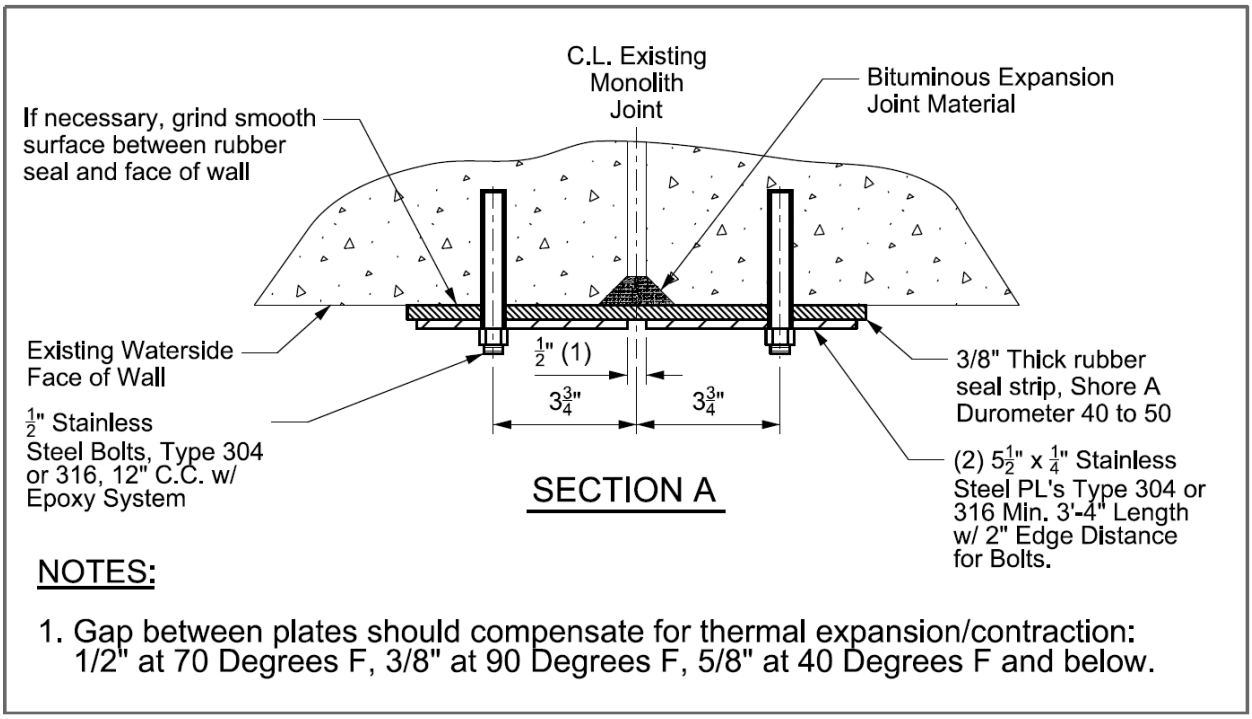

Figure 15.7. Waterstop Repair Using External Waterstop
(See Appendix A for English to Metric Conversions)

15.6.3. Settlement. Settlement may cause damage to waterstops that can be addressed as described in the previous paragraph. The top of wall may also need to be raised to provide the correct top of barrier elevation. If soil settles beneath a deep-founded wall creating a void, the area between the base and top of soil may be grouted.

15.6.4. Concrete Repair. Guidance for concrete repair can be found in EM 1110-2-2002.

15.6.5. PVC Repair. Repair of PVC should follow the manufacturer's suggested repair methods.

15.6.6. Temporary Protection. See Chapter 13 for guidance on temporary protection during repair and rehabilitation.

15.7. Replacement.

15.7.1. Wall systems require replacement when the repair or rehabilitation is no longer economical compared with replacement costs, or when the wall system no longer performs the intended function. An evaluation may be required to adequately assess the existing condition and compare alternatives. See Chapter 14 for guidance on evaluation.

15.7.2. Steel piling significantly weakened by corrosion may require replacement. In addition, although sheet piling may be structurally intact, where large permanent deformations from prior loadings have developed, the system will likely require an evaluation to verify the adequacy of the current design.

15.8. Mandatory Requirements. There are no mandatory requirements in this chapter.

Chapter 16
Analysis Methods

16.1. Introduction.

16.1.1. Analysis of soil-structure interaction (SSI) problems includes the assessment of earth pressures that depend on structural movements. However, the movements of the structure also influences the earth pressures. SSI can result in accurate predictions of structural displacements and changes in soil stresses.

16.1.2. Conventional USACE procedures for design of new structures and evaluation of existing structures revolve around the Limit Equilibrium Method (LEM). The LEM has been generally accepted as providing reasonable designs with few reported failures. However, the conditions for equilibrium are insufficient for all aspects of soil-structure interaction. Simplified design methods require assumptions regarding loading and resisting forces that act on the structures. The results of limit equilibrium models cannot predict deformations or provide information about response prior to the limiting state.

16.1.3. Full numeric analysis includes continuum based finite element and finite difference solutions. The methods have successfully been applied to soil-structure interaction problems over the past 50 years. These applications have included a range of earth and water retaining structures. The solutions account for both equilibrium and compatibility of displacements. Compatibility is not necessarily achieved in a limit equilibrium analysis.

16.1.4. The purpose of this chapter is to provide guidance on when to select certain analysis types. Additionally, strategies are provided on how to develop and document a full numeric analysis that meets USACE requirements. Some background is provided on the following simplified analysis methods:

16.1.4.1. Elastic stress distributions within a soil continuum;

16.1.4.2. Limit equilibrium;

16.1.4.3. Limit analysis;

16.1.4.4. Partial numeric beam-spring models; and

16.1.4.5. USACE CASE software programs.

16.1.5. These discussions are intended to assist an analyst in understanding the assumptions behind simplified methods. The analyst can then replicate conventional solutions within a full numeric analysis as part of the verification process.

16.1.6. This chapter only provides limited coverage of the topics, and the reader is referred to standard references for more detailed information. Standard references include Clough & Tsui (1977), Ebeling (1990), Potts & Zdravković (2001a,b), Potts (2003), and Zdravković and Potts (2010). Additional information can also be found in Appendix K and commercial software users manuals.

16.2. Elastic Stress Distributions Within a Soil Continuum.

16.2.1. Analysis of induced stresses can be performed by integrating the Boussinesq or Westergaard point load equations. The equations can be integrated over the loaded regions for general shapes. The resulting deformation pattern is related to the distribution of stresses. Analyses based on elastic stress distributions are convenient in that they can be expressed as exact closed-form solutions. Solutions vary depending on the problem geometry, soil conditions, and boundary conditions. Elastic stress distributions are useful for simple hand calculations or incorporation into simplified analysis software.

16.2.2. Solutions to elastic stress distributions are a useful starting point for verification of results from full numeric analysis software. Full numeric analysis software typically includes an elastic constitutive relationship, so analyses can be duplicated exactly. Closed-form solutions of elastic stress distributions require that the soil follows Hooke's law. Hooke's law assumes a constant relationship between stress and strain (linear elastic). Furthermore, the linear relationship between stress and strain does not change with depth (homogeneous). Charts, tables, and simplified equations exist for more generalized solution results.

16.2.3. Standard solutions were typically solved through numerical integration. These solutions can account for stiffness increasing with depth (nonhomogeneous) or differences between horizontal and vertical stiffness (anisotropic). Compilations of elastic solutions include, EM 1110-1-1904, Poulos and Davis (1974), and Mayne & Poulos (1999). Linear elastic solutions provide estimates of movement for both structures and soils. These estimates do not provide information on stability or plasticity induced nonlinearity, which, to some degree, restricts their practical application.

16.2.4. Elastic solutions are applicable for a number of cases but require some level of judgment. Cases include the following:

16.2.4.1. Organizing empirical observations.

16.2.4.2. Evaluating the influence of loads and adjacent structures on walls.

16.2.4.3. As part of verification studies for full numeric analysis.

16.2.4.4. Partial numeric beam-spring analyses.

16.3. Limit Equilibrium.

16.3.1. The LEM is the oldest method for performing geotechnical stability analysis. LEM involves assuming a potential slip surface geometry and assessing whether forces and/or moments are in equilibrium. The LEM can be considered to form the basis of traditional stability analysis methods within this manual. It is also the basis for other stability-based designs, such as slope stability (EM 1110-2-1902).

16.3.2. For analysis of the rotational potential failure mode for walls, moment equilibrium is assessed. This requires rotation around a pivot point and balancing mobilized active and passive pressures on opposite sides of the wall. Earth pressure coefficients are applied to generate an equilibrium stress distribution. Complications arise due to factors such as the following:

16.3.2.1. Wall friction;

16.3.2.2. Uneven ground;

16.3.2.3. Non-vertical walls;

16.3.2.4. Soil layering;

16.3.2.5. Non-rigid walls; and

16.3.2.6. Water seepage pressures.

16.3.3. Further complications arise when applying the LEM to global stability analysis of slip surfaces passing around a wall. A potential slip surface is separated into slices, requiring assumptions related to interslice shear and normal forces. Interslice forces affect the normal force on the base of the slice and resulting shear strength for drained loading conditions.

16.3.4. The soil constitutive relationship for the LEM is assumed to be rigid-perfectly plastic. The elastic deformation is considered to be negligible, so the soil does not deform until the limit state is reached. Displacements and strains are not considered explicitly within the LEM.

16.3.5. In strain softening soils the peak strength may not be mobilized concurrently along the entire failure surface. This may be minimized through how an analyst selects appropriate strengths. A post peak, rather than peak strength, may be selected to minimize potential for progressive failure.

16.3.6. The relative displacements of sliding blocks (slices) is not assessed in LEM. This changes how the calculation of an optimized solution is obtained for non-circular surfaces. This issue can be addressed by bounding performance using limit analysis calculations or through the use of full numeric analysis methods.

16.3.7. Limit equilibrium solutions are applicable to the assessment of factors of safety against soil collapse. Potential failure modes include sliding, rotation, bearing, and global stability. Applicable guidance for using the LEM is outlined in Chapters 7 through 11.

16.4. Limit Analysis.

16.4.1. Limit analysis (LA) rigorously follows formal theorems of plasticity. The method is constrained by the assumption of a rigid-perfectly plastic soil constitutive model. This is the same soil model assumed for the LEM. Results can be used to estimate collapse using kinematic and static solutions. The former leads to the upper bound on passive limit loads (or the factor of safety). The latter yields the lower bound (and vice-versa if active forces or reactions are sought).

16.4.2. Limit analysis approaches failure by bounding the solution. First, an optimized, kinematically-admissible failure mechanism is analyzed. Second, a statically-admissible stress field is analyzed. The true factor of safety or collapse load lies between the two solutions. Uncertainty is reduced by optimizing the upper and lower bound solutions. The difference in results between the two bounds is then minimized.

16.4.3. Limit analysis can be a rigorous verification solution for full numeric analysis strength reduction factor of safety calculations. This requires the same failure mechanism is analyzed using the same assumptions related to soil behavior and boundary conditions. The LEM has relaxed assumptions that can lead to larger differences between solutions.

16.4.4. Limit analysis is applicable to development of earth pressure coefficients and bearing capacity factors. The method is also appropriate for assessment of factors of safety against soil collapse. Potential failure modes include sliding, rotation, bearing, and global stability.

16.5. Partial Numeric Analysis: Beam – Spring Models.

16.5.1. Assessment of structural deformations commonly applies beam-spring models. Structural elements are supported by a linear or nonlinear spring or springs (vertical, horizontal, rotational) at the reaction points. Single springs at the reaction points can be replaced by a series of springs. These would be applied along the length or width of a structural element to represent the soil. Multiple springs can be used to better assess the following:

16.5.1.1. The distribution of contact stresses.

16.5.1.2. The effects of soil layering, the effects of strength and stiffness increasing with depth.

16.5.1.3. Nonlinear relationship between load and deflection.

16.5.2. The main limitations of a partial numeric analysis include the following (Clough and Tsui, 1977):

16.5.2.1. The difficulty in determining spring constants for the soil, particularly when multiple elements may be interacting with each other.

16.5.2.2. The inability to simulate the construction sequence directly, including the effects of wall friction.

16.5.2.3. The lack of information on surface movements behind retaining structures.

16.5.3. Beam-spring models are often solved using finite element, finite difference, or boundary element techniques. The method is considered as partial numeric analysis from the point of soil-structure interaction. Use of full numeric continuum methods can explicitly account for:

16.5.3.1. Construction history.

16.5.3.2. Adjacent piles.

16.5.3.3. Other loads, including: structures, slopes, and foundations.

16.5.4. Beam-spring models are applicable when the influence of non-soil loads and complexities of the structure are greater than the influence of soil loads. There are two typical applications. One is the assessment of deformations and bending moments for individual piles responding to axial and lateral loading. The other is the response of pile groups supporting walls.

16.6. USACE PC Software.

16.6.1. USACE Computer Aided Structural Engineering (CASE) PC software listed here are available to assist in the design and analysis of floodwalls and retaining walls. The software is based on the methods previously mentioned: (i) elastic stress distribution; (ii) limit equilibrium; and (iii) partial numeric beam-spring models. A brief description of standard software is included in Table 16.1. Copies of computer programs, with documentation, for the analysis, design, and evaluation can be obtained from the address below. CASE PC software is not continuously updated, and some programs may become obsolete.

U.S. Army Engineers, Engineer Research and Development Center (ERDC)
Information Technology Laboratory; CASE software library
3909 Halls Ferry Road
Vicksburg, Mississippi 39180–6199

16.6.2. CASE PC software programs are applicable for use, as outlined in Chapters 7 through 11. As with all analyses procedures, results from CASE software needs to be checked using verification procedures. Verification procedures include comparison to hand calculations or results of other software programs.

Table 16.1
CASE PC Software Related to Floodwalls and Other Hydraulic Retaining Walls

Software Title	Chapters Referenced	Analysis Methods Incorporated	Brief Description
CSLIDE/RCSLIDE	Ch. 7	Limit Equilibrium	Assessment of the sliding stability of concrete structures. Features include the assessment of (i) multiple soil layers with irregular surfaces; (ii) water and seepage; (iii) surcharge loads; (iv) horizontal point loads; (v) irregular shaped structure with horizontal or sloping base; (vi) stress distribution on base of wall; (vii) pseudo static earthquake loads; and (viii) analysis of specified failure surfaces (Pace & Noddin, 1987). Analysis procedures of CSLIDE are extended in RCSLIDE to incorporate reliability assessment methods for the stability of concrete gravity structures (Ayyub et al., 1998).
CTWALL/CTWALLR	Ch. 7	Limit Equilibrium	Design and analysis of T-type retaining and floodwalls using classical methods. Assesses overturning and sliding stability and bearing capacity. Flood loads are input using water levels and the unit weight of water. Uplift is addressed using the "line of creep" method or input pressures on base of structure (Pace, 1994).

Software Title	Chapters Referenced	Analysis Methods Incorporated	Brief Description
CBEAR	Ch. 7	Limit Equilibrium	Analysis of the bearing capacity of shallow strip, rectangular, square, or circular foundations on one- or two-layer soil systems. Analyses include the effects of (i) embedment; (ii) base inclination; (iii) inclined loads; (iv) sloping soil surface; (v) eccentric loads in three dimensions; (vi) submerged soil; and (vii) surcharges (Mosher & Pace, 1982).
CSANDSET	Ch. 7	Elastic/Empirical	Compute the settlement of shallow foundations on sand using elastic theory and 14 empirical methods, some with a basis in elastic theory. The empirical methods generally relate to how operational elastic modulus is estimated as a function of SPT N-value or relative density, as well as simplifying assumptions in application of elastic theory. The shallow foundations are assumed to be embedded at less than one footing width (Knowles, 1991).
CAXPILE	Ch. 8	Beam – Spring Model	Performs an analysis of axially loaded vertical or batter piles, which transfer load along its embedment depth into the soil through use of nonlinear t-z curves for axial load transfer. (Dawkins, 1984).
COM624G	Ch. 8	Beam – Spring Model	Performs an analysis of laterally loaded vertical piles which transfer load along its embedment depth into the encompassing soil through use of nonlinear P-Y curves for lateral load transfer (Reese et al., 1974).

Software Title	Chapters Referenced	Analysis Methods Incorporated	Brief Description
CPGA/CPGA-R	Ch 8	Beam – Spring Model	Performs an analysis of a pile foundation utilizing the stiffness method. Pile cap is assumed to be rigid (nondeformable). Pile-soil behavior is assumed to be linearly elastic, where resistance is directly proportional to displacement. The program assumes "long" piles and can account for pile locations and batter (Hartmann et al., 1989). CPGA-R extends the analysis procedures of CPGA to incorporate reliability assessments of structures and walls founded on piles and pile groups (Ebeling et al. 2013). Ebeling & White (2016) describes a procedure using CAXPILE for approximating nonlinear SSI response by characterizing the axial stiffness of an individual compression batter pile embedded in soil through an assigned C_{33} term.
CWALSHT	Ch. 9, Ch. 10 App. B	Limit Equilibrium	Design and analysis of cantilever and anchored sheet pile walls using classical methods. The program can be used to calculate the required depth of penetration of a new wall or assesses the factors of safety for an existing wall (Dawkins, 1990).

Software Title	Chapters Referenced	Analysis Methods Incorporated	Brief Description
CIWALL 2.0	Ch. 9	Limit Equilibrium	Design of new cantilever pile walls (I-walls) or the analysis of existing I-walls. The program has the capability to assess the depth that a zone of separation (a gap) forms along the waterside of the soil to sheet pile I-wall interface during flood loading. The probabilistic analysis capabilities for analyzing existing I-walls includes the construction of a system response curve (a.k.a., fragility curve), which gives the probability of rotational instability as a function of flood elevation (Ebeling et al., 2018).
CWALSSI	Ch. 9, Ch. 10	Limit Equilibrium/ Beam – Spring model	Soil-Structure Interaction (SSI) analysis of sheet pile walls using the Winkler assumption for representing the soil as nonlinear springs. The program uses classical soil mechanics procedures for determining the limiting active, at-rest, and passive soil pressures. Seepage effects are included in a simplified manner in the program (Dawkins, 1994).

Software Title	Chapters Referenced	Analysis Methods Incorporated	Brief Description
CMULTIANC	Ch. 11	Limit Equilibrium/ Beam – Spring model	The CMULTIANC simplified construction sequencing analysis is applicable to flexible walls with a single row or multiple rows of post-tensioned tieback anchors. Top-down construction is assumed in this analysis procedure. The retaining wall system is modeled using beam on inelastic foundation methods with elasto-plastic soil-pressure deformation curves (R-y curves) used to represent the soil behavior. The R-y curves are developed within the CMULTIANC program according to the reference deflection method (Dawkins et al., 2003).
CWRotate	Ch. 17	Pseudo Static Limit Equilibrium/ Sliding Block	Analysis of permanent wall rotation for proposed retaining wall section to a user-specified earthquake acceleration time-history. CWRotate is particularly applicable to L-walls and T-walls (cantilever retaining walls), and may also be used to predict permanent, seismically induced (rotational) displacements on retaining walls with or without a toe restraint (Ebeling & White, 2006).

Software Title	Chapters Referenced	Analysis Methods Incorporated	Brief Description
CWSlip	Ch. 17	Pseudo Static Limit Equilibrium/ Sliding Block	Analysis of the translational response of soil- or rock-founded retaining walls, with or without toe restraint, to earthquake ground motions. Analyses are performed using specified earthquake acceleration time-history via a complete time-history analysis. Alternatively, user-specified peak ground earthquake response values are input for a simplified sliding block analysis. CWSlip is particularly applicable to L-walls and T-walls (usually referred to as cantilever retaining walls) (Ebeling et al., 2007).

16.7. Full Numeric Analysis: Finite Element Method and Finite Difference Method with a Soil Continuum.

16.7.1. To perform or review full numeric analysis that create reliable results, the analyst needs to be familiar with the following:

16.7.1.1. Analysis types;

16.7.1.2. Material behavior; and

16.7.1.3. Verification and validation procedures.

16.7.2. The following sections focus on these topics for stress deformation analysis. FEM that is commonly used for 2D seepage analysis is discussed in detail in Knowles (1992), Brandon et al. (2018), and EM 1110-2-1913.

16.7.3. The full numeric analysis process outlined in this chapter includes:

16.7.3.1. Develop and input model geometry.

16.7.3.2. Determine analysis (Q, R, and/or S cases) and boundary conditions. Particular attention should be paid to the boundary conditions.

16.7.3.3. Develop geologic and construction history.

16.7.3.4. Assess soil properties for constitutive model.

16.7.3.5. Develop and run simplified validation cases.

16.7.3.6. Verify validation cases and update soil properties within constitutive model.

16.7.3.7. Run full model and parametric (sensitivity) studies.

16.7.3.8. Verify full model.

16.7.3.9. Develop conclusions as to how modeled structural performance and safety factors align with guidance within this manual.

16.8. Methods and Analysis Types.

16.8.1. A brief discussion is provided on full numeric analysis methods including:

16.8.1.1. Continuum based finite element method.

16.8.1.2. Continuum based finite difference method.

16.8.1.3. Finite element limit analysis.

16.8.2. Within those methods, different types of analysis can also be performed:

16.8.2.1. Stress deformation soil-structure interaction.

16.8.2.2. Strength reduction analysis.

16.8.2.3. Plane strain, axisymmetric, and 3D analyses.

16.8.2.4. Coupled vs. uncoupled analyses.

16.8.3. Finite Element Method.

16.8.3.1. The FEM is a numerical method where a problem is broken down into smaller equivalent continua for analysis. Within a FE analysis, the program will solve for a primary unknown and derive secondary quantities. For a stress deformation analysis, the primary unknowns are typically displacements, with stresses being secondary quantities.

16.8.3.2. Stress deformation problems can also be solved for stresses, with the secondary quantities being strains and displacements. If a deformation analysis is coupled with seepage and flow, such as for coupled consolidation, there are multiple primary unknowns. Displacements and pore pressures are the primary unknowns, with (effective) stresses and quantities of flow as secondary quantities. Examples of USACE projects where the FEM has been used are included in Appendix K.

16.8.3.3. The FEM is applicable to assessment of deformation of structures. When using strength reduction factor analysis, the FEM is also applicable for factors of safety against collapse.

16.8.4. Finite Difference Method. Like the FEM, the finite difference method (FDM) takes a larger problem and breaks it into smaller increments. The derivation of the solution to governing equations differs for the FEM and FDM. However, the resulting solution equations are the same for the two methods (Itasca, 2016).

16.8.5. FEM and FDM solutions are therefore generally in agreement. Main differences occur due to meshing, implementation of soil models, and how the solution algorithm deals with coupled problems and nonlinearity. Those issues, for either method, can be checked as part of the review and quality control process. Examples of USACE projects where the FDM has been used are included in Appendix K.

16.8.6. The FDM is equally applicable to assessment of deformation of structures as the FEM. The FDM is also applicable to assess factors of safety against collapse through strength reduction factor analysis.

16.8.7. Finite Element Limit Analysis.

16.8.7.1. Limit analysis can be evaluated numerically; this is known as Finite Element Limit Analysis (FELA). FELA is equivalent to an analytical upper bound when the following are true:

16.8.7.1.1. Displacements are the primary unknown.

16.8.7.1.2. Stresses are the secondary quantity.

16.8.7.1.3. The constitutive model is rigid plastic.

16.8.7.2. FELA is equivalent to an analytical lower bound when the following are true:

16.8.7.2.1. Stresses are the primary unknown.

16.8.7.2.2. Strains and displacements are the secondary quantities.

16.8.7.2.3. The constitutive model is rigid plastic.

16.8.7.3. Rigid-plastic codes have been developed for solving both upper and lower bound solutions (Sloan, 2013; Krabbenhøft, 2018). FELA can directly solve for a limit load or factor of safety. In these cases, FELA does not rely on numerical non-convergence to define collapse. This can be seen as a benefit of numerical limit analysis over FEM and FDM. Furthermore, numerical limit analysis can be used to reasonably solve lower bound solutions, which are tedious to optimize analytically.

16.8.7.4. The difference between FELA upper and lower bound solutions is often much smaller than when solving cases analytically. The model error implied by the difference in optimized upper and lower bound solutions is often acceptable for design (see Sloan, 2013). FELA analyses assume a rigid, perfectly plastic material with associated flow. These assumptions are the same as those for most analytical collapse load based design formulations. FELA is applicable to collapse loads but is not a complete solution for assessing structural deformations.

16.8.8. FELA is applicable to assessment of limit loads and factors of safety against collapse. These may be performed using traditional multiplier based analyses or through strength reduction techniques. FELA is also useful for quantifying potential model error by bounding a solution with UB and LB results. Examples of USACE case histories where FELA has been applied is included in Appendix K.

16.8.9. Full Numeric Analysis Types. Stress Deformation Soil-Structure Interaction (SSI) Analysis. The principal results that can be obtained from an SSI analysis are the soil and structure stresses and displacements. Due to the interaction between stresses and displacements, use of a full numeric analysis may be necessary to assess displacements. Conventional limit equilibrium methods do not predict displacements. However, LEM can be adequate for design where there is a sufficient experience base. When there is less experience, or when displacements are critical, an SSI analysis is needed. Examples of USACE SSI projects are included in Appendix K.

16.8.10. Strength Reduction Factor Analysis.

16.8.10.1. Strength reduction analyses can be a useful complement to stress-deformation analyses. This technique provides a factor of safety against collapse, which can link traditional guidance requirements to full numeric analyses. Factors of safety can be found using what is termed the "c-φ" reduction technique. Soil shear strengths are reduced by a Strength Reduction Factor (SRF) until failure is reached.

16.8.10.2. The factor of safety is defined in most cases as the SRF associated with non-convergence. This is often considered a limitation of the method. However, results between LEM and full numeric factors of safety are often very similar. Contours of shear strains often indicate locations consistent with the LEM critical slip surfaces. When solving for strength reduction factors of safety, the amount of displacement is not of interest. It is not necessary that accurate stress-strain properties be obtained from laboratory or in situ tests. A full numeric analysis can proceed with the same material parameters (s_u, c', φ', γ) needed for the LEM.

16.8.10.3. Proponents of strength reduction factor of safety assessment discuss many advantages over the LEM. The greatest advantage is considered the ability to solve for the critical failure mechanism without searching numerous possible slip surfaces. Experienced engineers are generally confident that the most critical slip surface is not overlooked. Sometimes complex combinations of geometry, stratigraphy, and soil strengths can result in unexpected outcomes. Critical failure surfaces may then be more readily identified with a full numeric analysis.

16.8.10.4. This is especially true with the introduction of structural elements within the section. An example of this is discussed by Pace et al. (2012). A composite levee/I wall was analyzed using full numeric analysis. Results were used to identify whether the critical failure mode was global stability or wall rotation. Use of a single analytical tool allowed for more consistent interpretation. Examples of USACE projects where SRF analysis has been used are included in Appendix K.

16.8.11. Plane Strain, Axisymmetric, and 3D Conditions.

16.8.11.1. Many geotechnical problems have one dimension that is much longer than a characteristic dimension. For example, embankments or walls will generally have a width along an alignment that is greater than 10 to 20 times the wall height or base width. Soil variability and critical loads will be perpendicular to the longer, out of plane, dimension. For these cases, it is convenient to model the problem in two dimensions using the assumption of plane strain. Plane strain simplifies the analysis by assuming that strains in the out of plane direction are zero.

16.8.11.2. Other problems, such as vertical loading of a circular foundation, specifically have rotational symmetry. These problems can conveniently be performed using cylindrical coordinates. Stresses and strains are then defined in the radial, circumferential, and vertical directions. Like a plane strain problem, there is no displacement in the out of plane direction. For axisymmetric analyses, the radial direction is out of plane. Most commercial 2D finite element and finite difference software programs can solve plane strain and axisymmetric problems.

16.8.11.3. Some problem geometries are not axisymmetric or plane strain. Comparison of stability and deformation calculations using both of these analysis conditions can bound expected response. It is common to model problems with a square geometry as circles with the same area. Increased judgment is required by the analyst for interpreting more complex geometries. Potts (2003) presents an example of a square excavation supported by a diaphragm wall. The horizontal distribution of ground surface displacements were in better agreement with the axisymmetric analysis than the plane strain analysis. In this case, the plane strain and axisymmetric cases bracketed, measured, and calculated 3D vertical profiles of wall deflections.

16.8.11.4. Full 3D finite element modeling is becoming more common in geotechnical engineering practice. It is considered that full 3D analyses can better handle complex structural geometries, loading conditions, and soil variability. Design requirements and experience link back to plane strain and axisymmetric design methods. Plane strain and axisymmetric analyses should be part of the verification and quality control process if 3D analyses are used.

16.8.12. Coupled vs. Uncoupled Analysis.

16.8.12.1. Drainage, and the potential to develop pore pressures during loading, is controlled by the rate of loading compared to the characteristic dimension of a design problem. It is also controlled by how fast water moves through the soil.

16.8.12.2. Depending upon drainage, pore pressures may be generated by construction and loading activities. Within a full numeric analysis development of pore pressures can be assumed or modeled. An analysis that considers the generation of pore pressures during loading, and their influence on soil properties, is considered a coupled analysis. Since soil strength and stiffness are controlled by effective stresses, this generation of pore pressure during loading influences soil response. A coupled analysis also incorporates the influence of pore pressures and effective stress on soil strength and constitutive relations.

16.8.12.3. Coupled analyses inherently include a time component (such as consolidation, transient seepage). Analysis of coupled transient response within full numeric analyses has historically been considered a limitation. There is more potential for analyst error, leading to a user dependence and increased variability in results. Examples include the uncertainty in analyzing rapid drawdown, which may require switching to appropriate undrained shear strengths. Additionally there is uncertainty about time for pore pressure dissipation from consolidation and shear. These uncertainties effect how changes in effective stress change soil strength and stiffness.

16.8.12.4. The uncertainty in evolution of strength with time is typically too great to be relied upon explicitly in design and analysis. This is particularly true when considering the timeframe over which the changes take place. Design requirements and experience link back to bracketed Q and S design cases. Uncoupled analyses should be part of model verification and quality control process if fully coupled analyses are also used. Field validation of strength gain with time is required if constitutive models result in strength gain from coupled consolidation.

16.8.12.5. Typical design revolves around two cases:

16.8.12.5.1. The Quick Case (Q). Loads occur prior to periods of time when construction induced pore pressures have dissipated. Loads occur fast enough that pore pressures do not have time to dissipate. This case is applicable to low hydraulic conductivity and low coefficient of consolidation materials (such as clays and some silts, typical).

16.8.12.5.2. The Slow Case (S). Both construction and loading induced pore pressures have reached equilibrium for all materials.

16.8.12.6. High hydraulic conductivity and high coefficient of consolidation materials (sands and silty sands, typical) are usually modeled using drained parameters for the Q- and S-cases. The exception is during earthquake loading.

16.8.12.7. Both the Q-case and the S-case can be modeled using full numeric analysis methods as an uncoupled analysis. For uncoupled analyses pore pressures do not affect strength and stiffness parameters. For clays and some silts, undrained strength ($c=s_u$ and $\phi=0$) should be used for Q-case analyses. For all soils, drained strength parameters ($\phi'>0$) should be used for S-case analyses. Earthquake analysis requires separate considerations.

16.8.12.8. The rapid loading R-case is a special case of a coupled analysis. Soil strength and stiffness change with time due to partial or full dissipation of construction induced pore pressures. Loading then occurs fast enough such that pore pressures cannot dissipate in, at least, some layers.

16.8.12.9. The R-case can be applicable to stage construction of levees on soft soils. Assessment of flood loading of sand and silty sand embankments overlying soft clay soils, is another example. Use of normalized strength parameters (see Equation 5.2) related to the modified Cam Clay soil model. This model, or similar variants, can be used within full numeric analysis programs to provide insight into anticipated longer term response. Field validation of strength gain with time is required if constitutive models result in strength gain from coupled consolidation.

16.8.12.10. With time-dependent soil material properties, fully coupled full numeric analyses are complex, and advanced modeling efforts require special attention to detail in order to assure reasonable results. Incorporating unsaturated soil regimes adds further complexity to this type of advanced analysis. Fully coupled analysis results are usually in support of the layout of an instrumentation program for the project. Results from full numeric analyses in relation to instrumentation and validation programs are useful for the following:

16.8.12.10.1. Location and types of instrumentation.

16.8.12.10.2. Model and interpret instrumentation results.

16.8.12.10.3. Identify critical layers for verification sampling and testing. This may be the layer with the largest strength gain or location of long- term critical slip surface.

16.9. Material Behavior.

16.9.1. Introduction. Material behavior for full numeric analysis includes the soil constitutive model, structural elements, and interface behavior.

16.9.1.1. A brief discussion is provided on the following topics:

16.9.1.1.1. Linear elasticity.

16.9.1.1.2. Poisson ratio.

16.9.1.1.3. Elasto-plasticity.

16.9.1.1.4. Stress dependence on compressibility.

16.9.1.1.5. Stress and strain dependence on shear modulus.

16.9.1.1.6. Dilation angle/plastic potential.

16.9.1.1.7. Tension in soils.

16.9.1.1.8. Water filled gap or tension crack.

16.9.1.1.9. Structural elements.

16.9.1.1.10. Soil-structure interfaces.

16.9.1.2. Basic guidance is provided in this section, and a more detailed discussion of stress state and material parameters is provided in Appendix K.

16.9.2. Soil Constitutive Models. In the simplest form, a constitutive model of soil behavior relates stresses and strains. The numerical program can then solve for both equilibrium and compatibility. Full numeric analysis software packages often include a range of soil models, such that an analyst can calibrate their model to analytical benchmark solutions. Then the analyst can extend the model by changing the soil constitutive model to better evaluate complexities in soil behavior. These complexities are generally not included in analytical solutions.

16.9.3. The following paragraphs summarize main aspects of soil models typically within commercial full numeric analysis codes.

16.9.4. Linear Elasticity. Linear elasticity assumes a constant relationship between changes in stress and resulting strain. Linear elastic models are often used to model structural elements, such as walls, beams, and slabs. Soil behavior is generally more complex than a linear elastic model. Solution algorithms for linear elasticity are less dependent on magnitude of stress, change, or load increments, than for elasto-plastic soil models.

16.9.5. Elastic models may be useful for validation of numerical implementation through comparisons to analytical solutions and benchmark problems. Elastic analysis requires two material parameters. They are commonly taken as the elastic (Young's) modulus, E, and Poisson ratio, ν. Parameters may vary in spatial directions as well as depending upon the direction of loading.

16.9.6. Poisson Ratio.

16.9.6.1. The Poisson ratio is the (negative) ratio of lateral to axial strain for elastic loading. It is common to assume Poisson ratio of 0.49 to 0.5 for undrained loading. Drained loading generally has ν between 0.25 and 0.35. At small strains (~ $1x10^{-6}$ to $1x10^{-4}$), ν is generally between 0.1 and 0.15. The high Poisson ratio for undrained loading is related to the concept of zero volumetric change. The bulk modulus of water controls response in low hydraulic conductivity and low coefficient of consolidation soils.

16.9.6.2. For elastic analysis, Poisson ratio is also related to the in situ coefficient of earth pressure at-rest (K_0):

$$K_0 = \frac{\nu}{1-\nu} \qquad \text{(Equation 16.1)}$$

Where:

ν = Poisson ratio

It can be assumed that K_0 = (1-sinϕ) for normally consolidated soils. Following from (Equation 16.1, Poisson ratio could be equal to (1-sinϕ)/(2-sinϕ). Ranges of ν between 0.25 and 0.35 for intermediate to large strains and typical values of ϕ result. K_0 increases with overconsolidation ratio and compaction stresses. K_0 may need to be manually adjusted when developing initial stresses within a numerical model.

16.9.7. Elasto-Plasticity and Nonlinearity.

16.9.7.1. Elastic models can be limited by a yield surface to develop elasto-plastic models. This better accounts for strength of soils and effects of local yielding on pre-collapse deformations. Within an elasto-plastic soil model, strains are composed of both a recoverable elastic (ε^e) and recoverable plastic (ε^p) component.

$$\varepsilon = \varepsilon^e + \varepsilon^p = \left(\varepsilon^e{}_p + \varepsilon^e{}_q\right) + \left(\varepsilon^p{}_p + \varepsilon^p{}_q\right) \qquad \text{(Equation 16.2)}$$

Where:

ε = strain

ε^e = elastic recoverable strain

ε^p = plastic irrecoverable strain

$\varepsilon^e{}_p$ = elastic recoverable strain due to volumetric (mean effective stress) changes

$\varepsilon^e{}_q$ = elastic recoverable strain due to shearing

ε^p_p = plastic irrecoverable strain due to volumetric (mean effective stress) changes

ε^p_q = plastic irrecoverable strain due to shearing

16.9.7.2. Furthermore, each component of strain will have two components. One is a volumetric component due to changes in mean effective stress. The second is a shear component due to changes in shear stress. These are referred to as ε_p and ε_q, respectively, based on the stress invariants p' and q. More detail is provided in Appendix K, Wood (1990), and full numeric analysis software users manuals. The (negative) ratio of compressive to shear strain for elastic loading is based on the Poisson ratio. The (negative) ratio of volumetric to shear strain for plastic loading is controlled by a plastic potential. The plastic potential is discussed in Appendix K.

16.9.7.3. Stresses, pore pressures, and strains in the soil change due to the application of numeric external loads. Changes in effective stresses and strains change the soil (shear and bulk) moduli and result in a nonlinear analysis. Depending upon the soil constitutive model, the nonlinearity of the solution is effected by both elastic and plastic parameters. There are two important concepts to include in a nonlinear elastic model. One is an increase in shear and bulk modulus due to increases in effective stress (plastic hardening); the other is a decrease in shear modulus due to mobilized stress ratio or strain level.

16.9.7.4. The following sections provide discussion of conventional soil mechanics deformation parameters. The intent is for the analyst to be able to link to selection of constitutive model parameters to typical parameters. Additionally, this information is necessary in validation of the numerical models.

16.9.8. Effective Stress Dependence on Compressibility.

16.9.8.1. For conventional analyses, volume change is typically characterized using results from a conventional 1D oedometer test. Oedometer tests are typically interpreted in terms of the Terzaghi virgin compression parameter (C_C) and recompression or swelling parameter (C_R). The related modulus value for the 1D compression parameters is the constrained modulus (D). The constrained modulus is the inverse of the coefficient of volumetric compression (m_v):

$$D = \frac{1}{m_v} = \frac{\Delta\sigma'_v}{\Delta\varepsilon_v} \qquad \text{(Equation 16.3)}$$

Where:

$\Delta\sigma'_v$ = change in vertical effective stress

$\Delta\varepsilon_v$ = change in volumetric strain

16.9.8.2. The use of C_C (plastic) and C_R (elastic) gives a constrained modulus that is greater during reloading than initial loading. The parameters also allow for plastic hardening, which is an increase of the constrained modulus with increasing effective stress. The relationship between constrained modulus under initial normally consolidated (NC) loading and Terzaghi parameters for compression is:

$$D_{NC} = \frac{1}{m_v} = \frac{(1+e_0)\cdot\Delta\sigma'_v}{\log(\sigma'_{vf}/\sigma'_{v0})\cdot C_C} \approx \frac{2.3(1+e_0)\sigma'_{v,avg}}{C_C} \quad \text{(Equation 16.4)}$$

Where:

e_0 = in situ void ratio at the start of a loading increment

$\Delta\sigma'_v = \sigma'_{vf} - \sigma'_{v0}$ = change in vertical effective stress over an increment of loading

σ'_{v0} = the initial vertical effective stress before a loading increment

σ'_{vf} = the final vertical effective stress for a loading increment

σ'_{avg} = the average vertical effective stress for a loading increment

C_C = 1D Terzaghi coefficient of compression

16.9.8.3. The relationship between constrained modulus and Terzaghi parameters for recompression or swelling (unload-reload, u-r) is:

$$D_{u-r} = \frac{1}{m_{v,u-r}} = \frac{(1+e_0)\cdot\Delta\sigma'_v}{\log(\sigma'_{vf}/\sigma'_{v0})\cdot C_R} \approx \frac{2.3(1+e_0)\sigma'_{v,avg}}{C_R} \quad \text{(Equation 16.5)}$$

Where:

e_0 = in situ void ratio at the start of a loading increment

$\Delta\sigma'_v = \sigma'_{vf} - \sigma'_{v0}$ = change in vertical effective stress over an increment of loading

σ'_{v0} = the initial vertical effective stress before a loading increment

σ'_{vf} = the final vertical effective stress for a loading increment

σ'_{avg} = the average vertical effective stress for a loading increment

C_R = 1D Terzaghi coefficient of recompression

16.9.8.4. Standard elasto-plastic soil models, such as the Mohr-Coulomb model, assume a constant modulus. This is despite an increase in constrained modulus with increasing effective stress being one of the most well-known soil behaviors. However, there are three common ways to account for Terzaghi-like responses during compression numerically:

16.9.8.4.1. Use an isotropic elasto-plastic Mohr Coulomb soil model. The shear and bulk modulus are varied vertically and horizontally throughout the model. This is accomplished through the use of layers or soil units with different material properties. This method does not accurately account for effective stress changes during loading. The method may also be less accurate than using an appropriate advanced constitutive model. Small load steps in a model and changing modulus throughout loading can help increase accuracy with this approach.

16.9.8.4.2. Use a soil model that increases modulus with natural log of effective mean stress, (CamClay or Modified CamClay type model).

16.9.8.4.3. Use a soil model that increases modulus with vertical effective stress (Plastic Hardening Soil (HS) Model, Schanz et al., 1999; Hardening Mohr Coulomb Models, Muir Wood, 2004; Doherty & Muir Wood, 2013).

16.9.8.5. A comparison of logarithmic and linear compression modulus fits for oedometer test results is illustrated in Figure 16.1. Both models show good agreement with test results. Accounting for plastic hardening with advanced constitutive models will typically results in improved estimation of consolidation deformations of soft soils. However, comparison to a standard Mohr-Coulomb model is usually appropriate as part of the verification and validation steps of modeling. Validation may use a constant bulk modulus or a bulk modulus linearly increasing with depth.

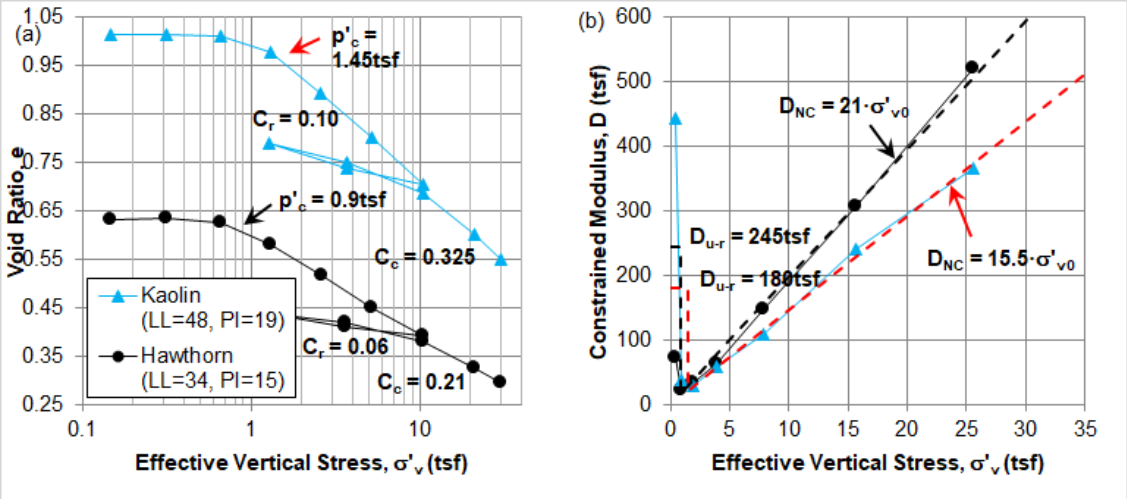

Figure 16.1. Comparison of Oedometer Test Results for Two Clays Using (a) Terzaghi CC and CR Parameters and (b) Model of Constrained Modulus Increasing with Effective Stress in Normally Consolidated Range

16.9.8.6. The constrained modulus is typically not an input parameter for numerical constitutive models. Two parameters are needed, at a minimum, to describe elastic mechanical behavior: Either Young's modulus and Poisson ratio (E and ν) or bulk modulus and shear modulus (K and G). Within soil mechanics, it is more rational to choose the second set, K and G. This separates the effects of changes in size of a soil element due to changes in mean effective stress (K) from change in shape of a soil element due to a shear stress (G).

16.9.8.7. The bulk modulus, K, is defined as the ratio of the change in mean effective stress divided by the volumetric strain:

$$K = \frac{\Delta p'}{\Delta \varepsilon_v} \qquad \text{(Equation 16.6)}$$

Where:

$\Delta p'$ = change in mean effective stress $(\sigma'_1+\sigma'_2+\sigma'_3)/3$

$\Delta \varepsilon_v$ = change in volumetric strain

16.9.8.8. The bulk modulus is directly related to the constrained modulus through K_0. Within elastic theory K_0 is equal to $\nu/(1-\nu)$, with ratios of K/D that follow:

$$\frac{K}{D} = \frac{1+2K_0}{3} = \frac{\left(1+\frac{2\nu}{1-\nu}\right)}{3} = \frac{(1+\nu)}{3(1-\nu)} \qquad \text{(Equation 16.7)}$$

Where:

K_0 = the coefficient of earth pressure at-rest

ν = Poisson ratio

16.9.9. Effective Stress and Strain/Stress Ratio Dependence of Shear Stiffness.

16.9.9.1. Shear stiffness is the resistance to distortion (development of shear strain) that results from increases in shear stress. Shear stiffness is characterized using the shear modulus, G.

$$G = \frac{\Delta \tau}{\Delta \gamma} \qquad \text{(Equation 16.8)}$$

Where:

$\Delta \tau'$= change in shear stress

$\Delta \gamma$ = change in shear strain

16.9.9.2. When assuming elastic theory, shear modulus is related to elastic modulus through the Poisson ratio (ν).

$$E = G \cdot 2(1 + \nu) \qquad \text{(Equation 16.9)}$$

Where:

G = the shear modulus

ν = Poisson ratio

16.9.9.3. From a first order perspective, shear modulus tends to increase with mean effective stress, and decrease as shear strain increases. Conventional levels of operational shear strain are illustrated in Figure 16.2. Shear modulus is often discussed as an operational (secant) shear modulus. A secant shear modulus is defined at a fraction of the failure stress (mobilized stress ratio). G_0 is the initial small strain value (< 10^{-4} percent). G_{33} is the shear modulus at one third (33 percent) of the failure stress. G_{50} is the shear modulus at half (50 percent) of the failure stress.

16.9.9.4. Influence of stress level on shear modulus for full numeric analysis can be handled through soil layering or advanced constitutive models. The same three techniques as discussed in section 16.9.8.4. Influence of strain level of shear modulus requires additional judgment. Strain dependent shear modulus is discussed in the following sections and Appendix K.

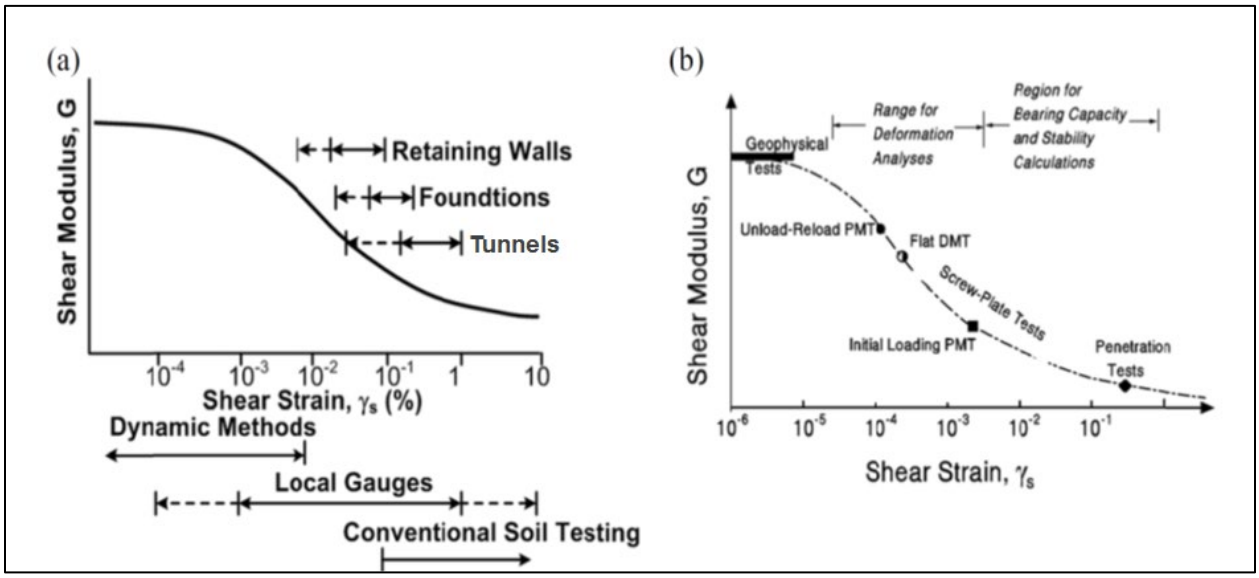

Figure 16.2. Influence of Strain Level on Soil Stiffness (a) Laboratory Tests and Design Applications (After Atkinson, 2000) and (b) In Situ Tests and Design Applications (Mayne, 2001)

16.9.9.5. Operational shear modulus tends to decrease as the mobilized stress (τ/τ_f) ratio increases (see Mayne et al., 2009, Figure 16.3a). The change is not linear and can be approximated using $(\tau/\tau_f)^{0.3}$. Therefore, $G_{0.25}$ is approximately 1/3 G_0, $G_{0.4}$ is approximately 1/4 G_0 and $G_{0.5}$ is approximately 1/5 G_0. Input stiffness for numerical models typically uses a secant value associated with G_{50}.

16.9.9.6. Operational secant shear modulus in undrained clays is often assumed to be proportional to undrained strength. The ratio of G to s_u is the Rigidity Index ($I_R=G/s_u$). I_R tends to vary from 25 to 350 and reduce as OCR increases, PI increases, and mobilized shear stress ratio increases.

16.9.9.7. Sensitive clays tend to have higher ratios of G/s_u as compared to insensitive clays at the same PI. Typical trends and simplified equations for preliminary design are shown in Figure 16.3. Many undrained analyses use Elastic modulus, E, rather than shear modulus G. For undrained loading $E = 3G$. Based on Figure 16.3b, E_{50}/s_u would vary from about 75 to 1000.

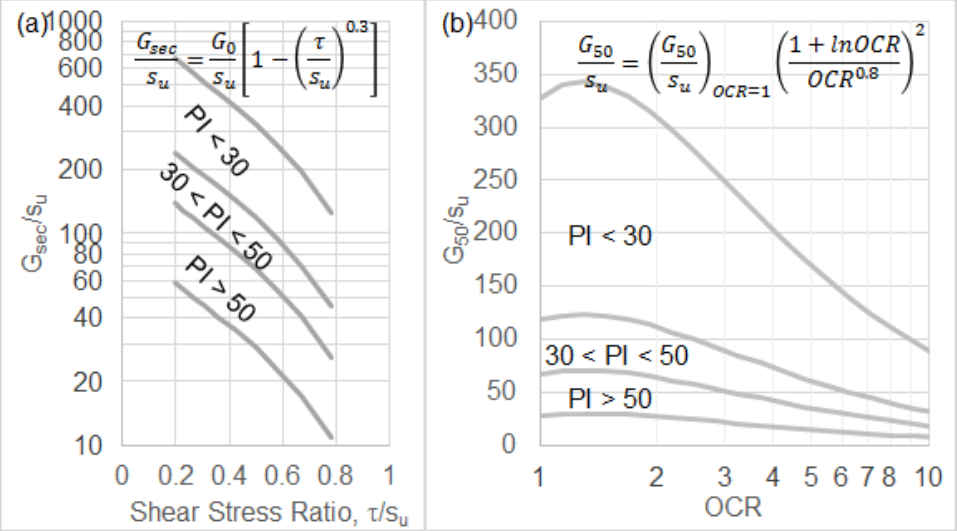

Figure 16.3. Influence of (a) Mobilized Stress Ratio and (b) OCR on Rigidity Index (Duncan and Buchignani, 1976; Ladd et al., 1977; Keaveny & Mitchell, 1986; Equations After Mayne, 2001)

16.9.9.8. Disturbance from sampling and preparation of samples for laboratory testing have a larger influence on stiffness than strength. Measurement of shear modulus using in situ tests may be more reliable for application to numerical analysis. The three most common in situ methods for measuring stiffness are geophysical tests, pressuremeter tests, and flat plate dilatometer tests.

16.9.9.9. In general, pressuremeter tests are more applicable to stiff soils and rocks. The flat plate dilatometer is more applicable to soft soils and sands.

16.9.9.10. Geophysical Tests. Geophysical tests provide a measure of the shear wave velocity (V_s). V_s can be used to directly calculate the small strain shear modulus ($G_0=\rho \cdot V_s^2$) with knowledge of the mass density (ρ). Geophysical tests are useful in that they therefore provide a direct measure of the small strain shear modulus. Typical geophysical tests include the following:

16.9.9.10.1. The seismic piezocone penetration test.

16.9.9.10.2. Crosshole Test (CHT).

16.9.9.10.3. Spectral Analysis of Surface Waves (SASW).

16.9.9.10.4. Multichannel analysis of surface waves (MASW).

16.9.9.11. G_0 has historically been used as an input into equivalent linear numerical analysis of earthquake loading. However, G_0 is often too stiff for operational analysis of retaining walls and foundations. Significant reduction is required for accurate evaluation of deformations. Most full numeric analysis constitutive model use an operational shear modulus at 50 percent of the failure stress. G_{50} is typically 1/3 to 1/5 of G_0.

16.9.9.12. PMT. For assessing deformation of floodwalls, an operation value of shear modulus is needed. The pressuremeter is an ideal tool for measuring soil stiffness. However, installation disturbance may have an effect on these interpretations. The processed stiffness values should also be compared against values determined from other engineering procedures.

16.9.9.13. The initial ‘elastic’ portion of a pressuremeter expansion curves is often influenced by disturbance. A reduction in cavity stress followed by an increase in cavity stress is termed an unload-reload loop. Unload-reload loops are best practice for measuring shear modulus in the pressuremeter test. The size of the stress reduction needs to be large enough such that there is sufficient resolution to measure the change in cavity strain. However, it also needs to be small enough to prevent plasticity from reducing the ‘elastic’ stiffness.

16.9.9.14. For undrained loading (clays), the change in stress (Δp) should be less than twice the estimated undrained strength. For drained loading (sands), the criteria is based on friction angle. The change is stress should be less than the effective cavity stress at the beginning of the loop (p'_i) multiplied by $2 \sin \phi'/(1+\sin\phi')$.

16.9.9.15. Various correction factors have been published for applying pressuremeter modulus to wall design or for use in full numeric analysis constitutive models. The designer should review these factors to ensure they are consistent with the soil type, loading conditions, safety factor, and anticipated levels of wall movement expected (see Zhang et al., 2015). The pressuremeter unload-reload shear modulus is typically reduced by a factor of two for input to full numeric analysis soil constitutive models based on G_{50}.

16.9.9.16. DMT. The flat plat dilatometer is a relatively quick and reliable test. The DMT provides multiple readings (p_0 and p_1) of soil response at a target test depth. The DMT disturbs the soil has been due to probe installation. The test does not provide as much information as a pressuremeter test, but it is much quicker than a PMT. However, there is a large body of experience with its use for geotechnical design (see Marchetti, 2015). Parameters can be used to evaluate in situ horizontal stress, soil strength, soil stress history, and elastic stiffness. The liftoff pressure (p_0) is related to in situ horizontal stress. The difference between p_0 and the expansion pressure (p_1) is related to the dilatometer elastic modulus:

$$E_D = 34.7(p_1 - p_0) \quad \text{(Equation 16.10)}$$

Where:

E_D = the dilatometer elastic modulus

p_0 = the dilatometer liftoff pressure

p_1 = the dilatometer expansion pressure

16.9.9.17. The dilatometer modulus is often directly used to assess immediate settlements in sands. E_D can be used to estimate an operational secant shear modulus in sands using Poisson ratio (ν) though elastic theory, $G=E/[2(1+\nu)]$. Dilatometer modulus is typically lower than pressuremeter modulus and can be used as G_{50} in numerical models after conversion from E_D to G.

16.9.10. Dilation Angle/Plastic Potential/Flow Rule.

16.9.10.1. A numerical model may be globally stable, even if a portion of the model have yielded. Accumulation of plastic shear and volumetric strains due to that local yielding needs to be defined. In addition to the yield surface, elasto-plastic models require a plastic potential, also referred to as a flow rule. Changes in mean and shear stresses in the yielding zones will produce strains. The plastic potential gives the resulting ratio of plastic volumetric strains to plastic shear strains. When defining the plastic potential within a Mohr-Coulomb constitutive relationship, the dilation angle (ψ) is typically used. The change in size of a soil element (volumetric strain) due to the change in shape of a soil element (shearing) is indicated by the dilation angle (ψ').

$$tan\psi = -\frac{\delta\varepsilon_v{}^p}{\delta\gamma^p} \quad \text{(Equation 16.11)}$$

Where:

$\delta\varepsilon v^p$ = the change in plastic (irrecoverable) volumetric strain

$\delta\gamma^p$ = the change in plastic (irrecoverable) shear strain

16.9.10.2. During undrained loading with zero volumetric change, the dilation angle is zero. For drained loading, measured soil behavior show that the dilation angle is typically less than the friction angle. This can be modeled using a constitutive model with a plastic potential that is not equal to the yield surface. When the plastic potential is not equal to the yield surface, this is known as non-associated flow ($\phi' \neq \psi'$). Commercial full numeric analysis software typically allows for utilizing the Mohr-Coulomb soil model with associated or non-associated flow rules. Dilation angles in excess of zero should not be used for undrained analysis. The resulting negative shear induced pore pressures (increases in effective stress) will cause continued increase in shear strength with strain.

16.9.10.3. It is also common to analyze the behavior of sands using a dilation angle of zero. Dilation angles can be greater than zero. For this case ψ' can be estimated from the difference between peak and large displacement friction angle (see Bolton, 1986; Andersen & Schjetne, 2013):

$$\psi'_{pk} = \frac{(\varphi'_{pk} - \varphi'_{cv})}{\beta} \approx 1.25\left(\varphi'_{pk} - \varphi'_{cv}\right) \qquad \text{(Equation 16.12)}$$

Where:

ϕ'_{pk} = the peak friction angle

ϕ'_{cv} = the constant volume friction angle

β = a sand specific parameter

16.9.10.4. β tends to vary between 0.6 and 0.8, and the value of 0.8 is typically used in analysis.

16.9.10.5. Collapse loads for unconfined problems are not significantly influenced by dilation angle (Houlsby, 1991; Yu et al., 1998). Walls, like slopes, have low levels of confinement. Numerical assessment of earth pressure distributions and strength reduction factors of safety are fairly independent of selection of ψ'. Deformations, particularly surface displacements of the soil behind the wall, are more effected by ψ'.

16.9.11. Tension in Soils.

16.9.11.1. Tension in soils is a well-known problem that, if not properly accounted for, can lead to the following:

16.9.11.1.1. Overprediction of slope stability factors of safety.

16.9.11.1.2. Underprediction of wall movements at the ground surface.

16.9.11.1.3. Overprediction of I-wall stability. This is particularly important for cases where a water filled gap forms behind the wall.

16.9.11.2. Incorporation of zero tension in soils has historically been considered a limitation of full numeric analysis. Modern software typically allows for constitutive models with a tension cutoff. This is often implemented as a second yield surface within the constitutive model that prevents tension from forming. A constitutive model should be used that does not allow for tension in the soil. Also, interface elements that do not allow tension should also be applied to structural elements.

16.9.12. Water Filled Gaps and Tension Cracks.

16.9.12.1. Applying water pressures within gaps or cracks must generally be dealt with manually. Tension cracks and water filled tension cracks are illustrated in Figure 16.4. Additional discussion is provided in detail by Pace et al. (2012) and Ebeling et al. (2018).

16.9.12.2. There are a number of ways to initiate water filled tension cracks numerically. A two-step procedure tends to produce the most reliable results. First, remove a thin column of soil elements adjacent to the wall. Second, applying a water pressure to support the soil, prevent base heave, and load the wall. A similar procedure can be used to create water filled cracks at the heel of T-walls.

16.9.12.3. If performing a strength reduction analysis with water filled gaps or cracks, it may be necessary to assign the free field soil strength above the crack as "non reducible." This will prevent soil from failing into the gap or crack. This zone of "non reducible" soil would need to be sized and located such that it does not influence the critical failure mechanism.

(a) (b)

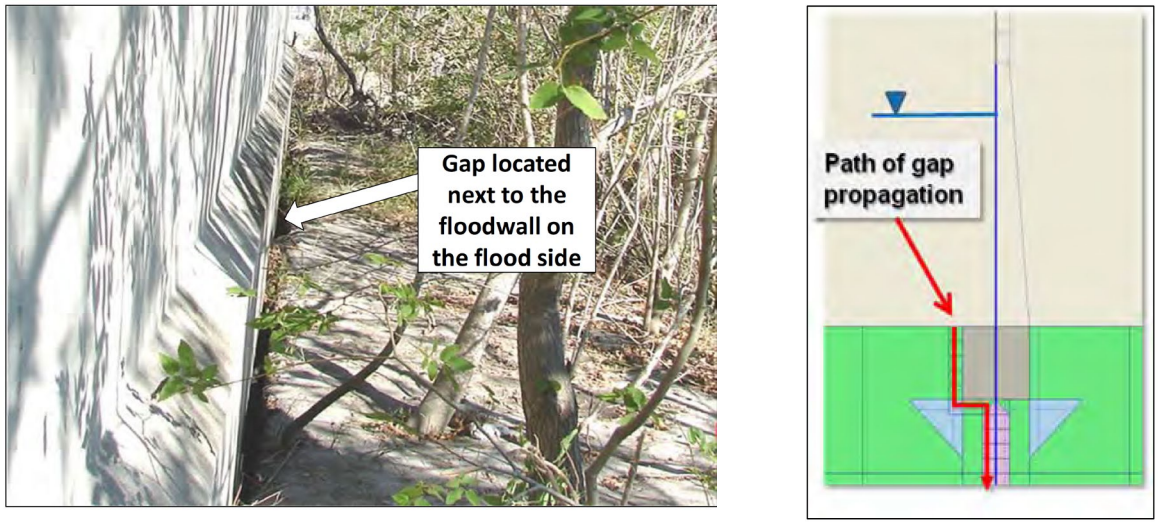

Figure 16.4. (a) Development of a Zone of Separation Between the I-Wall and the Soil Interface on the Waterside of the I-Wall Following Hurricane Katrina (b) Incorporating a Tension Crack in Full Numeric Analysis of I-Walls (Pace et al., 2012)

16.9.13. Structural Members.

16.9.13.1. Most full numeric analyses for wall problems are performed in plane strain. Forces are thought of as force per unit length out of plane of the problem analyzed. Sheet piles are continuous out of plane and are often modeled as beam elements. Concrete walls are continuous out of plane and structural members are typically modeled as solid elements with an appropriate thickness. An elastic or Mohr-Coulomb constitutive model can be used. Driven or bored piles will not be continuous in the out of plane direction and need special treatment. This is also true for ground anchors. Commercial full numeric analysis software programs often include special pile and anchor elements.

16.9.13.2. Beam elements are typically defined based on their average axial stiffness, EA, and their bending stiffness, EI. E is the elastic modulus of the wall material. A is the cross sectional area per unit length of the wall. I is the moment of inertia per unit length of the wall.

16.9.13.3. Pile elements are generally beam elements with a reduced stiffness. This accounts for the spacing of the piles over an associated length of wall. Most commercial software packages do not require the user to calculate the reduced stiffness but input the pile spacing.

16.9.13.4. Piles that are modeled in plane strain do not allow for soil to flow through the piles. They act in the same manner as a wall in the out of plane direction. Limiting shaft friction and end bearing components of the pile is typically managed using (zero thickness) interface elements. End bearing is often lumped with shaft friction over the lower two diameters of the pile to minimize numerical difficulties. If a pile is loaded in tension, it should not have an end bearing component of capacity. This check may need to be performed manually.

16.9.13.5. Commercial full numeric analysis software typically also has a specific structural element to model anchors. Anchors are like tension piles in that stiffness and shearing resistance need to be weighted by the tributary length out of plane. The main difference between piles and anchors is that anchors are tension members. They typically involve a “free” length where there is no shearing interaction with the surrounding soil. Anchor elements generally consist of an elastic spring connected to the element they are anchoring. The spring is followed by interface elements to represent the bonded length that can resist shear. The bending stiffness of anchors is often ignored to minimize interaction between the anchor and soil movements.

16.9.14. Soil-Structure Interfaces.

16.9.14.1. Structural elements interacting with continuum elements will share a common set of nodes with soil elements on both sides of the structural element. The relative movement between the soil and structure is not permitted in this case. To overcome this constraint at the soil-structure boundary, interface elements have been developed. Interface elements can be any of the following:

16.9.14.1.1. Standard continuum elements;

16.9.14.1.2. Spring based linkage elements;

16.9.14.1.3. Specialized zero thickness interface elements; and

16.9.14.1.4. Hybrid elements.

16.9.14.2. Specialized zero thickness interface elements are most common in commercial FE programs. Interface elements are necessary for mechanical interfaces. Interface elements are also needed for hydraulic interfaces in flow simulations or coupled analysis. For example, if hydraulic interfaces are not included, a structural sheet pile wall may be modeled as pervious in calculations. When troubleshooting unexpected hydraulic head distributions, analysts may need to further investigate how hydraulic interfaces are applied.

16.10. Verification and Validation.

16.10.1. Verification checks whether the calculation is performed correctly, and validation checks whether the correct calculation is performed. Under verification, a brief discussion is provided on each of the following:

16.10.1.1. Nonlinear solution and number of loading steps;

16.10.1.2. Meshing; and

16.10.1.3. Output parameters to evaluate.

16.10.2. Under validation, a brief discussion is provided on the following items:

16.10.2.1. Geometry and domain size;

16.10.2.2. Benchmark solutions and subset analyses;

16.10.2.3. Construction history; and

16.10.2.4. Well-documented case histories and databases.

16.10.3. Verification – Number of Loading Steps.

16.10.3.1. For full numeric analysis, when using soil models other than linear elasticity, material behavior will be nonlinear. That is, the ratio of the change in nodal displacements due to a change in stress is not constant. The change in nodal displacements due to a change in stress varies over an increment of loading. A solution algorithm is therefore required to try to minimize the error in the nonlinear problem.

16.10.3.2. A number of solution algorithms exist depending upon problem geometry and degree of nonlinearity. Different solution algorithms can result in different levels of analysis error. Broadly speaking, solution algorithms may be (i) incremental, (ii) iterative; or (iii) mixed. If assessing the stability of a nonlinear algorithm, a good first check is to use a linear elastic material. The solution results for elastic analysis should be truly independent of the number of loading steps.

16.10.3.3. Incremental nonlinear procedures can be considered as piecewise linear. Methods in this category include the tangent stiffness method, Euler, and Runge-Kutta methods. If the increment of analysis is not sufficiently small, the stiffness and collapse limit loads are typically overpredicted. Iterative procedures include the Newton, and Newton-Raphson methods. These methods generally have the first iteration based on the tangent stiffness method. If the calculated system is not in equilibrium, iteration is performed to reach an acceptable error as compared to equilibrium.

16.10.3.4. Mixed procedures involve multiple steps. First, the analyst would break the loading into a number of smaller steps. Second, the load would be solved using an iterative technique. Increasing the number of steps can be accomplished by manually changing the construction sequence. This could include reducing the size of the stress change, excavation depth, or embankment height. The model then needs to have subsequent steps based on results of previous step.

16.10.3.5. Computational solution time will increase with number of loading steps. It is desirable to use a small number of steps and software that incorporates a numerical solution technique that is stable. Newton-Raphson iterative solutions have been shown to have good stability using as low as a single loading increments for a range of benchmark problems (Potts & Zdravkovic, 2001a). A Newton-Raphson iterative solution is a preferred solution algorithm when performing full numeric analysis.

16.10.3.6. More recent advances in nonlinear solution algorithms includes the use of interior point optimization. These methods have been shown to be more stable and efficient for large problems (Krabbenhøft et al., 2012). Interior point optimization solutions are also a preferred solution algorithm for full numeric analyses.

16.10.4. Mesh Sensitivity.

16.10.4.1. The mesh for an SSI problem should reflect the geometry of the structure and the stratigraphy of the foundation soils. It should also reflect the configuration of any excavations and/or fills that are part of the work.

16.10.4.2. In addition, the mesh should have sufficient refinement. Deformations and stress gradients are then smoothed as one moves from element to element in areas of interest. Automated meshing strategies and adaptive meshing techniques within commercial full numeric analysis software have advanced to a point that can minimize the sensitivity of analysis results to mesh selection. An analyst or reviewer still needs to check for issues related to meshing. At a first order, the number of elements will control the sensitivity of a solution to the selected mesh. More specifically, accuracy is controlled by the number of integration points within concentrated shear zones that form a failure mechanism.

16.10.5. Output Parameters. Complete SSI models are complex and consist of many parts. Incorrect assumptions, or implementation of assumptions, can significantly affect results. Models are typically built in various states, starting simple and becoming more complex. It is important for an analyst to check results at each of these states by comparing to expected results. If differences exist, they must be reconciled. The first check is of the mesh.

16.10.6. Additional Verification. Additional verification should be checked at various points through the model, not just for the final results. Examples of parameters that can be checked as part of the verification process include, but are not limited to the following:

16.10.6.1. Vertical stresses as compared to hand calculations.

16.10.6.2. Pore water pressures as compared to hand calculations.

16.10.6.3. K_0 prior to loading.

16.10.6.4. Ensuring that boundary conditions do not influence results.

16.10.6.5. Check of stresses on surfaces where loads are applied.

16.10.6.6. Computed displacements vs. expected deformed shape.

16.10.6.7. Ensure that loads, shear, and moment are within expected ranges and in line with traditional analyses. The same constitutive relationships as used in the traditional analyses should be used for these checks.

16.10.6.8. Active and passive stresses are within a reasonable range.

16.10.6.9. The shape of the failure mechanism is reasonable. This can be indicated by shear strains, displacement or velocity vectors, and indications of plastic zones.

16.10.6.10. Plots of both wall movements and bending moments.

16.10.7. Validation. Validation is needed to assess whether differences between a numerical model's assumptions and actual material behavior (reality) influence results. Validation prevents use of analyses that are inconsistent and unreliable within the range of typical scenarios expected to be encountered.

16.10.8. Geometry and Domain Size.

16.10.8.1. The domain of a problem is the area within the defined boundaries that is meshed to develop a solution. Loading boundaries may be excavations, embankment, or footing loads. If free field boundary conditions are too close to a loading boundary, then the size of the domain will influence the modeling result. Results will then be analyst dependent, a case which should be avoided. A balance between accuracy and time must be achieved. Large domains may take an excessively long times to solve, particularly for uniform meshes. For analysis of deformations related to earth retaining structures, isotropic elastic and isotropic elasto-plastic soils models (such as Mohr-Coulomb) can be particularly sensitive to domain size.

16.10.8.2. The depth of the domain is typically truncated by the presence of a firm layer identified from soil borings. If not, the wall type and size influence the domain size. When modeling excavations adjacent to retaining walls the base of the model should extend at least 8 times the width of the excavation below the base of the excavation. For cantilever walls, the width of the domain is often taken as 8 to 16 times the embedded length of the wall. For T-walls and shallow foundations, the width of the domain is often taken 8 times the base width. Symmetry is often employed around the centerline of an excavation to reduce domain size. For modelling flooding, the wall is typically in the center of the domain.

16.10.8.3. When performing strength reduction analyses to assess collapse loads, domains that are smaller than one would use for assessing deformations can be used without significantly affecting the calculated factor of safety. It is typically appropriate to have a domain depth that is three times the characteristics dimension. The width should be six times as wide as the characteristic dimension, when not employing symmetry about the central axis. The characteristic dimension is the shallow foundation width or retaining wall embedded length. The analyst should ensure that contours of shear strain do not intersect a free field boundary.

16.10.8.4. It is not possible to make universally applicable statements about appropriate domain sizes. For modelers who are less experienced, it may be appropriate to study the effects of domain size on results. It is noted, however, that deformation calculations using an advanced soil model that account for higher small strain stiffness that degrades during loading are less influenced by domain size.

16.10.9. Benchmark Solutions and Subset Analyses.

16.10.9.1. When updating soil models and soil properties, it is recommended to validate results by simulating laboratory element tests. Element tests include triaxial compression and oedometer tests. Stress strain curves from numerical simulations should be compared to measured laboratory results at relevant stress and strain ranges. This is a first order validation.

16.10.9.2. It should be noted that use of a standard Mohr-Coulomb soil model with constant shear and bulk modulus will not match behavior of most soils over a wide effective stress range. However, the Mohr-Coulomb model may be adequate for many analyses, particularly if parameters are increased with initial in situ effective stresses or depth and varied for regions experiencing loading as compared to unloading.

16.10.10. Geologic and Construction History. Soil response is controlled by both the stress history over geologic times as well as during the history of construction. Preconsolidation due to changes in water table, erosion, or glaciation needs to be accounted for when developing a model. Consolidation under historic levees prior to a levee raise will influence both strength and settlement. For a floodwall, a typical construction history may include the following:

16.10.10.1. Initial stress prior to construction;

16.10.10.2. Lowering of the water table;

16.10.10.3. Excavation;

16.10.10.4. Pile installation;

16.10.10.5. Wall construction;

16.10.10.6. Backfilling; and

16.10.10.7. Loading cases with various water levels.

16.10.11. Well-Documented Case Histories and Database Assessment.

16.10.11.1. Validation of methodology and parameter selection can be performed through comparison of modeling strategy to historical cases. It is beneficial if the cases include both modeling and measured performance. These detailed case histories can be invaluable for understanding potential pitfalls in modeling a similar situation with similar geometry and soil layering. A list of USACE reports including detailed case histories in terms of methodology as well as performance information is included in Appendix K. Differences between the case history and actual project in terms of geometry and layering may limit their applicability in direct validation. However, a related case history is a good starting point for analyses.

16.10.11.2. Published databases of performance are useful for model validation. These studies would include analysis of number of different structures in a number of different soil conditions using a consistent methodology (see Zhang et al., 2015). However, databases generally suffer from limitations in availability of soil property, stratigraphy, and instrumentation data to a greater degree than that with a detailed case study.

16.11. Mandatory Requirements. Mandatory requirements from other chapters must also be met when performing a full numeric analysis. The exception is that best estimate (median) soil properties may be used for deformation assessment, while design line based soil properties must be used for strength reduction stability analyses.

Chapter 17
Geotechnical Seismic Performance of Floodwalls and Hydraulic Retaining Structures

17.1. Introduction.

17.1.1. Seismic design and evaluation for civil works projects in USACE is performed according to ER 1110-2-1806. The methods, and information provided in this chapter are focused primarily on the evaluation of seismic hazards and seismic performance as related to geotechnical design of floodwalls and hydraulic retaining walls. These methods can be used to satisfy the analyses for the load combinations in Appendix C.

17.1.2. An earthquake can induce dynamic loads on a floodwall and hydraulic retaining wall. The earthquake loads may result in structural movements or foundation failure. This requires additional analysis of the performance modes described in Chapters 7 through 11. This chapter discusses additional aspects of behaviors that need to be considered in addition to the increased seismic loads for assessment of seismic performance. The main geotechnical aspects that require considerations during seismic design of floodwalls and hydraulic retaining walls include, but are not limited to:

17.1.2.1. Seismic deformations of embankment and foundation soils and retained soils due to liquefaction of coarse-grained soils and transition to post-liquefaction residual strength.

17.1.2.2. Seismic deformations of embankment and foundation soils and retained soils due to cyclic softening of fine-grained soils.

17.1.2.3. Lateral spreading and cracking due to movement of soils from the upstream of the floodwalls or hydraulic retaining walls towards a free face.

17.1.2.4. Post-earthquake recompression (volumetric) settlement of saturated and dry soils.

17.1.2.5. Potential cracking adjacent to floodwalls and hydraulic retaining walls due to dynamic soil-structure interactions, leading to potential hydraulic loading induced stability issues.

17.1.2.6. Potential downdrag forces on deep foundation system due to liquefaction or compression of soft soils.

17.1.3. The analyses for a seismic event should be used to evaluate the level of performance that will be expected after a design earthquake event. Two-dimensional equivalent linear or nonlinear seismic deformation analyses can also be used to evaluate seismic stability and seismic deformations of the floodwall and hydraulic retaining wall systems incorporating foundations or retained soil conditions. In some cases, poor performance is expected if the bearing stratum is susceptible to liquefaction and has potential for large deformations, and cracking. Ground improvements or properly designed deep foundations can be used to mitigate seismic hazards for retaining structures.

17.1.4. Appropriate pool elevations or water levels should be used in combination with seismic events. The pool level and groundwater level selected for design will have a significant impact on the results of a design analysis. The design team should choose a pool elevation based on existing guidance, type of structure, and analysis.

17.1.5. Not all load combinations presented in Appendix C will require an evaluation of seismic performance. For example, the likelihood of a concurrent flood event during an OBE or MDE for a floodwall may be extremely unlikely, and therefore may not be considered as a design scenario. These structures may not be designed to specifically meet a certain level of seismic performance, the levee safety community can focus on post-earthquake planning.

17.1.6. Examples of post-earthquake planning are: emergency flood protection, emergency evacuations in the event of a high-water event following a seismic event, and rebuilding flood risk management features. Additionally, designers can consider if there are ways to include redundancy and resiliency design features that can improve the seismic performance since there is a large investment need for floodwalls and other hydraulic retaining structures.

17.2. Evaluation and Design Ground Motions.

17.2.1. USACE guidance is being developed for determining ground motion parameters and acceleration time series for seismic evaluation and design of floodwalls and hydraulic retaining walls. This upcoming guidance along with National Seismic Hazard Maps (NSHM) and tools by the USGS can be used for developing ground motion parameters for evaluation and design of civil works structures. Also, for critical features, site specific studies can be performed by supplementing USGS data or independently performing site-specific seismic hazards analyses.

17.2.2. PGA is a parameter that is required to evaluate seismic performance and liquefaction. The seismic coefficient (k_h) can be 50 percent to 100 percent of the PGA depending on the wall system and tolerable displacement. Section 6.9 can be used for general guidance to determine k_h and PGA until more updated USACE guidance is published. Reference section 17.9 for conditions to consider related to tolerable seismic displacements. This is especially important when designing hydraulic retaining structures that are frequently loaded where cracking could lead to internal erosion. Designers can use a displacement-based approach by specifying a tolerable deflection to determine an appropriate seismic coefficient for design (Reference section 17.9.9).

17.2.3. In some cases, free-field PGA may be needed for seismic analysis. However, if the structure is located on a slope or embankment, then PGA values may need to incorporate both site and topographic amplification effects. Since the seismic performance of embankments and foundation may depend on the level of shaking, there is a likelihood that in some scenarios, floodwalls and hydraulic retaining walls founded on embankments may experience amplifications. In other scenarios, structures may experience de-amplifications due to significant strength and stiffness loss. De-amplification of ground motions at dam crests is generally an indication of potential distress in the embankment and foundation, which can also impact the floodwalls and retaining walls. The amplification effects can be estimated by scaling a 1-dimensional site response analysis or performing a 2-dimensional site response analysis.

17.2.4. In addition to PGA, the earthquake moment magnitude (M_w) is used when calculating the factor of safety for liquefaction. The M_w values can be estimated by disaggregation of seismic hazard analysis results, using the USGS Unified Hazard Tool web application at https://earthquake.usgs.gov/hazards/interactive/. The earthquake magnitude is determined based on a return period (such as a 950-year return period) or a probability of exceedance for a given return period (such as a 10 percent probability of exceedance in 100 years). The return period will be dependent on the structure and design requirements (OBE, MDE, MCE). The ground motions for analysis should be developed according to ER 1110-2-1806.

17.2.5. The disaggregation function is used to review the different M_w that contribute to the seismic hazard. The tool provides a probabilistic-based mode and mean M_w. The relevant M_w is one that has the highest contribution to the seismic hazard (mode). The mean M_w is calculated using the weighted average of from all sources in the disaggregation. Using the mode or the mean M_w when there is more than one major contributing source may not always be appropriate. This is because using a mean M_w may result in a magnitude that is uncharacteristic for any of the sources. In such cases, analysis may need to be performed for multiple M_w and their associated PGAs to determine the critical scenario.

17.2.6. The peak ground velocity (PGV) is a parameter that is used when estimating the permanent post-seismic lateral displacement. The following equation is provided in Anderson et al., 2008 (NCHRP Report 611) for estimating PGV for earth and buried structures. Values for F_v can be obtained from ASCE 7-16 and values for S_1 can be obtained ASCE 7-16 or the USGS Unified Hazard Tool website cited in 17.2.4.

$$PGV\left(\frac{in}{sec}\right) = 55F_vS_1 \qquad \text{(Equation 17.1)}$$

Where:

F_v = Site coefficient at the 1-second period

S_1 = Mapped spectral response acceleration at 1-second period

17.3. Liquefaction Potential Evaluation. Soil liquefaction is defined as significant reduction of both the strength and stiffness of saturated (and primarily cohesionless) soils due to increase in pore pressures and resulting diminishment of effective stress. Coarser-grained soils such as sand, gravel, and silt with low plasticity are usually subject to soil liquefaction. In general, the following steps are used to characterize soil liquefaction potential and evaluate the potential impacts:

17.3.1. Site investigations using SPT, CPT, and Becker Penetration Test (BPT). EM 1110-1-1804 includes considerations for site investigations for seismic studies.

17.3.2. Assess soil susceptibility for liquefaction of coarse-grained soils or cyclic softening of fine-grained soils considering soil types, fines contents, Atterberg limits, water levels during earthquake, OCR, sensitivity, etc. Bray and Sancio (2006) indicate that loose soils with PI<12 and w_c/LL>0.85 were susceptible to liquefaction, and loose soils with 12<PI<18 and w_c/LL>0.8 were systematically more resistant to liquefaction. An in situ water content closer to liquid limit generally indicate a higher liquidity index or lower pre-consolidation pressure or OCR. Boulanger and Idriss (2006) suggests that for practical purposes, clay-like behavior can be expected for fine-grained soils that have PI>7.

17.3.3. Youd et al. (2001), Boulanger and Idriss (2014), and Cetin et al. (2018) are generally used to evaluate liquefaction potential using the SPT results. Youd et al. (2001), Moss et al. (2006), and Boulanger and Idriss (2014) are generally used to evaluate liquefaction potential using the CPT results.

17.3.4. Liquefaction potential is generally expressed in terms of Factors of Safety against liquefaction (FS_{liq}).

$$FS_{liq} = \frac{Cyclic\ Resistance\ Ratio\ (CRR)}{Cyclic\ Stress\ Ratio\ (CSR)} \qquad \text{(Equation 17.2)}$$

17.3.5. The following criteria is used for screening liquefaction potential for coarse-grained soils:

If $FS_{liq} \leq 1.0$, liquefaction is likely

If $1.0 < FS_{liq} \leq 1.4$, liquefaction is marginal

17.3.6. It is best practice to perform liquefaction triggering analyses using different methods and understand the rationale for differences and its potential impact considering site specific conditions. The factor of safety for design in a stratum is typically the median or mean value from the analyses. For critical structures, sometimes 2-dimensional site response analysis using appropriate stiffness and damping relationships is performed to obtain site-specific CSR, which eliminates use of empirical stress reduction factor.

17.4. Cyclic Softening of Fine-Grained Soils.

17.4.1. Laboratory tests show that clay-like soils can generate excess pore pressures during cyclic loading and suffer a corresponding decrease in shear stiffness. These effects can lead to the accumulation of significant shear strains during cyclic loading or, in the case of sensitive clays, a significant drop in the available undrained strength. These effects need to be rationally addressed in any seismic response and deformation analysis that includes potentially susceptible clay-like soils.

17.4.2. OCR, sensitivity ratio, peak or fully softened peak strength, and residual strength of fine-grained soils are required to characterize cyclic softening behaviors. Generally, normally consolidated to lightly overconsolidated clayey soils (OCR < 3 to 4) with medium to high sensitivity (sensitivity >2) may be subject to significant cyclic strain softening due to an earthquake.

17.4.3. Boulanger and Idriss (2007) provide a relationship to evaluate cyclic resistance of silts and clays that are likely to experience clay like behavior and subject to potential cyclic softening. This relationship requires ratio of cyclic stress to undrained shear strength (S_u) for the number of equivalent uniform cycles representative of an M_w=7.5 earthquake. Laboratory testing of undisturbed samples are required for use of this relationship. The criterion for assessment of cyclic softening potential for clayey soils is: If the factor of safety of cyclic softening (FS_{cs}) $\leq$ 1.0, cyclic softening is likely.

17.5. Strength of Potentially Non-Liquefiable Soils.

17.5.1. For soils that are not expected lose significant strength during an earthquake, values at or near peak strength can be used. Dynamic strength of these soils depends on rate effects, cyclic loading, and deformations. It also depends on duration and intensity of ground motions and response of soils.

17.5.2. Various references suggest strength values from 80 percent to over 100 percent of the soil peak strength are expected during earthquake shaking. Some research has indicated that a 15 to 20 percent strength reduction based on static strength is appropriate. Other research indicates that this strength reduction can be ignored considering rapid earthquake loading. In general, a peak to fully softened shear strength value should be used, and selection of the parameter should be consistent with the amount of strain expected in the analysis.

17.6. Post-Liquefaction Residual Strengths.

17.6.1. Strength of potentially liquefiable soils is estimated based on empirical relationships. These empirical relationships have been developed using performance case histories of embankments that have experienced large deformations or flow slides. Several post-liquefaction residual strength relationships are available for use:

17.6.1.1. The Seed and Harder (1990) method estimates the residual shear strengths (S_r) for liquefied soils based on equivalent clean sand N-value ($N_{1,60,cs\text{-}Sr}$).

17.6.1.2. Olson and Stark (2002) estimates the residual shear strength to initial effective stress (σ_{v0}'). ratio (S_r/σ_{v0}') based on stress normalized SPT N-value ($N_{1,60}$).

17.6.1.3. Idriss and Boulanger (2015) estimates S_r/σ_{v0}' based on $N_{1,60,cs\text{-}Sr}$. Fines correction factors for Idriss and Boulanger (2015) are the same as Seed and Harder (1990) and different than fines correction factors for liquefaction triggering analysis.

17.6.1.4. The Kramer and Wang (2015) method estimates S_r as a function of $N_{1,60}$ and σ_{v0}'.

17.6.1.5. Weber et al. (2015) method estimates S_r as a function of equivalent clean sand SPT N-value ($N_{1,60,cs}$) and σ_{v0}'.

17.6.2. Similar to liquefaction triggering assessment, it is best practice to estimate post-liquefaction residual strength using different methods and understand the rationale for differences and its potential impact considering site specific conditions. Mean or median values should be selected for design.

17.6.3. Residual Excess Pore Pressures. Residual excess pore pressures (r_u, defined as the ratio of excess pore pressure to total initial effective overburden stress) can be generated when $FS_{liq} > 1.0$. As shown in Figure 17.1, when $FS_{liq} \leq 1.4$ and approaching $FS_{liq} = 1.0$ the expected r_u increases substantially compared to $FS_{liq} > 1.4$. Not accounting for this increase in pore pressures can greatly overestimate the shear strength when evaluating performance modes. In a slope and embankment, downslope gravity-driven shear stress bias restricts excess pore pressure development, which should be considered in assessing liquefaction potential in embankments and slopes. Figure 17.1 can be used to estimate excess pore pressures for marginally liquefiable soils, otherwise, residual undrained shear strengths should be used.

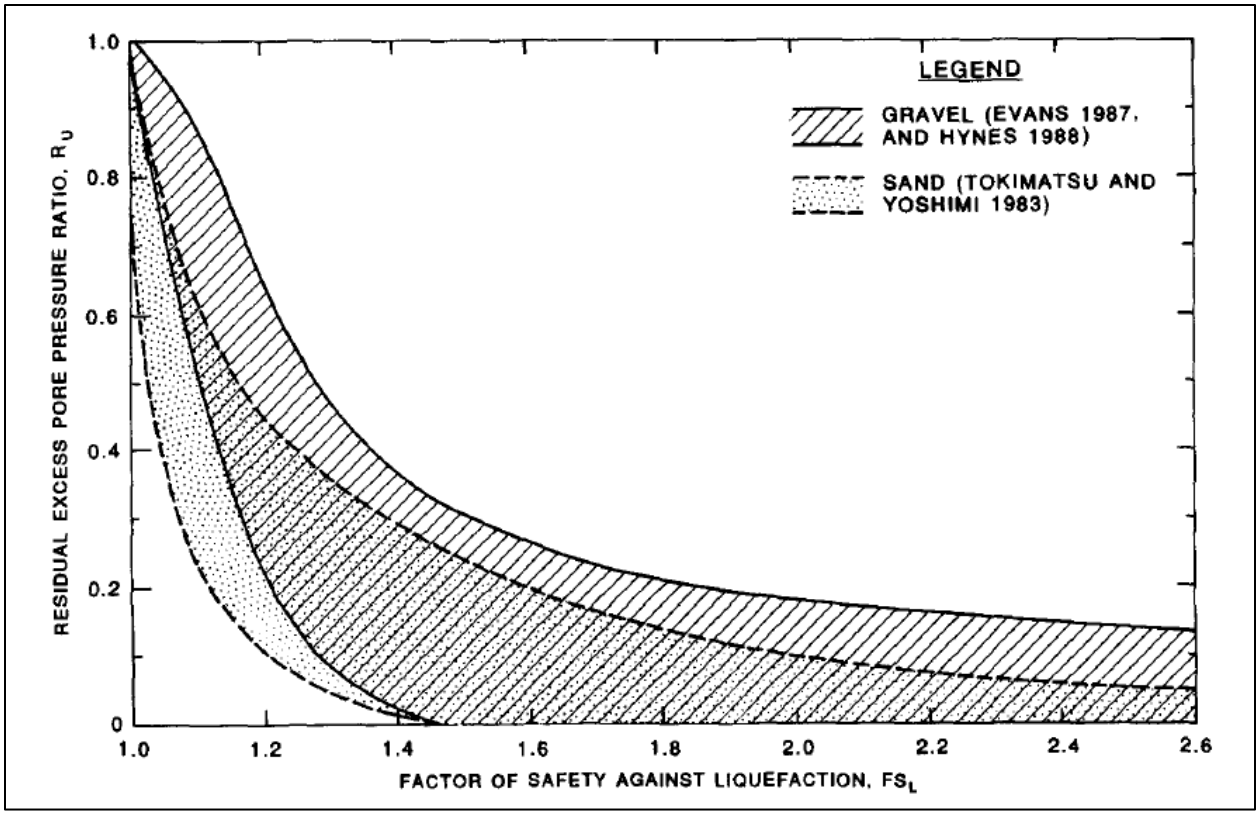

Figure 17.1. Relationship Between Residual Excess Pore Pressure Ratio and FSliq for Sand and Gravel, Marcuson, et al. (1990)

17.7. Pseudostatic Stability Analysis with Reduced Shear Strength and Post-Liquefaction Residual Strengths.

17.7.1. As a general seismic design principle, critical elements supporting the structure should be located to mitigate the effects of zones determined to have significant cyclic shear strength loss (SSL). These critical foundation elements include:

17.7.1.1. Shallow foundation bearing and sliding shear zones.

17.7.1.2. Soil influencing lateral stiffness, end bearing, and shaft friction for deep foundations.

17.7.1.3. Passive zone of embedded wall elements.

17.7.1.4. Anchor bond zones or anchor wall passive wedges.

17.7.2. Stability of embankment or foundation soils supporting a floodwall or hydraulic retaining wall should be evaluated. Additionally, the strength of the structural wall elements should be evaluated considering the earthquake loading. Hydrostatic water and seepage forces need to be included, where present. Hydrodynamic and inertial soil and structure loads are determined using the seismic coefficient in paragraph 17.2.2. The stability analyses should be performed using the following conditions:

17.7.2.1. For non-liquefiable soils, use peak to fully softened static shear strengths.

17.7.2.2. For potentially liquefiable soils, use of post-liquefaction residual strength.

17.7.2.3. For marginally liquefiable soils, include residual excess pore pressures in estimating shear strength of soils.

17.7.2.4. For fine-grained soils susceptible to cyclic softening, use of engineering judgment in selecting strengths representative of large strains, which could be incrementally lowered from initial reduced strength (80 percent of static strength) to residual strength of clay. If stability analysis is performed without ability to estimate strains, stability Factor of Safety should be evaluated based on residual strength of clay.

17.7.2.5. As clayey type soils may develop cracks during an earthquake within the soil mass or at the interface with the adjacent soil or structural features, stability analysis should incorporate cracks.

17.7.3. Applicable factors of safety for performance modes should be assessed with reduced strengths and seismic loads, these failure modes include:

17.7.3.1. Global Stability Failure (SF-4, DF-2, CP-2, AP-2).

17.7.3.2. Sliding Failure (SF-1).

17.7.3.3. Overturning (SF-2).

17.7.3.4. Bearing Capacity or Pullout Failure (SF-3, DF-1a, AP-3, AP-1b).

17.7.3.5. Lateral and Rotational Stability (DF-1b, CP-1, AP-1a).

17.7.3.6. Internal Structural or Connection Failure (SF-6, DF-4, CP-4, AP-5).

17.7.4. Ebeling and Morrison (1992), provide examples for evaluating performance modes using reduced strengths for gravity walls and anchored walls. Additional considerations for evaluations based on horizontal displacement of walls and embankments are covered in sections 17.9 through 17.12.

17.7.5. The global stability of the floodwall or hydraulic retaining wall is evaluated considering the strength and crack conditions described in section 17.10. The purpose of the stability analysis is to ensure satisfactory factors of safety during and after an earthquake. The seismic deformation estimates would require a simplified seismic deformation analyses or nonlinear seismic deformation analyses.

17.8. Cyclically Induced Reconsolidation or Volumetric Settlement.

17.8.1. Sands subjected to earthquake ground motions will have the tendency to densify which will result in permanent settlement. However, sands subjected to liquefaction can be susceptible to relatively large settlements. Performance modes with settlement as a contributing factor should be addressed for dynamic settlement of both dry and saturated sands. Vertical settlements from these estimates should be considered in addition to the lateral seismic deformation estimates.

17.8.2. Figure 17.2 provides the relationship between factor of safety against liquefaction and post liquefaction volumetric strain for different initial relative density values (D_R) from Ishihara and Yoshimine (1992). The volumetric settlement estimates made using Ishihara and Yoshimine (1992) or other relationships such as Cetin et al. (2009), and Wu and Seed (2004) are valid for saturated coarse-grained soils in relatively level-ground sites.

17.8.3. Sands that are above the water table or not subjected to full liquefaction can be subjected to some settlements. For dry sandy soils, volumetric settlement is estimated using a relationship from Tokimatsu and Seed (1987).

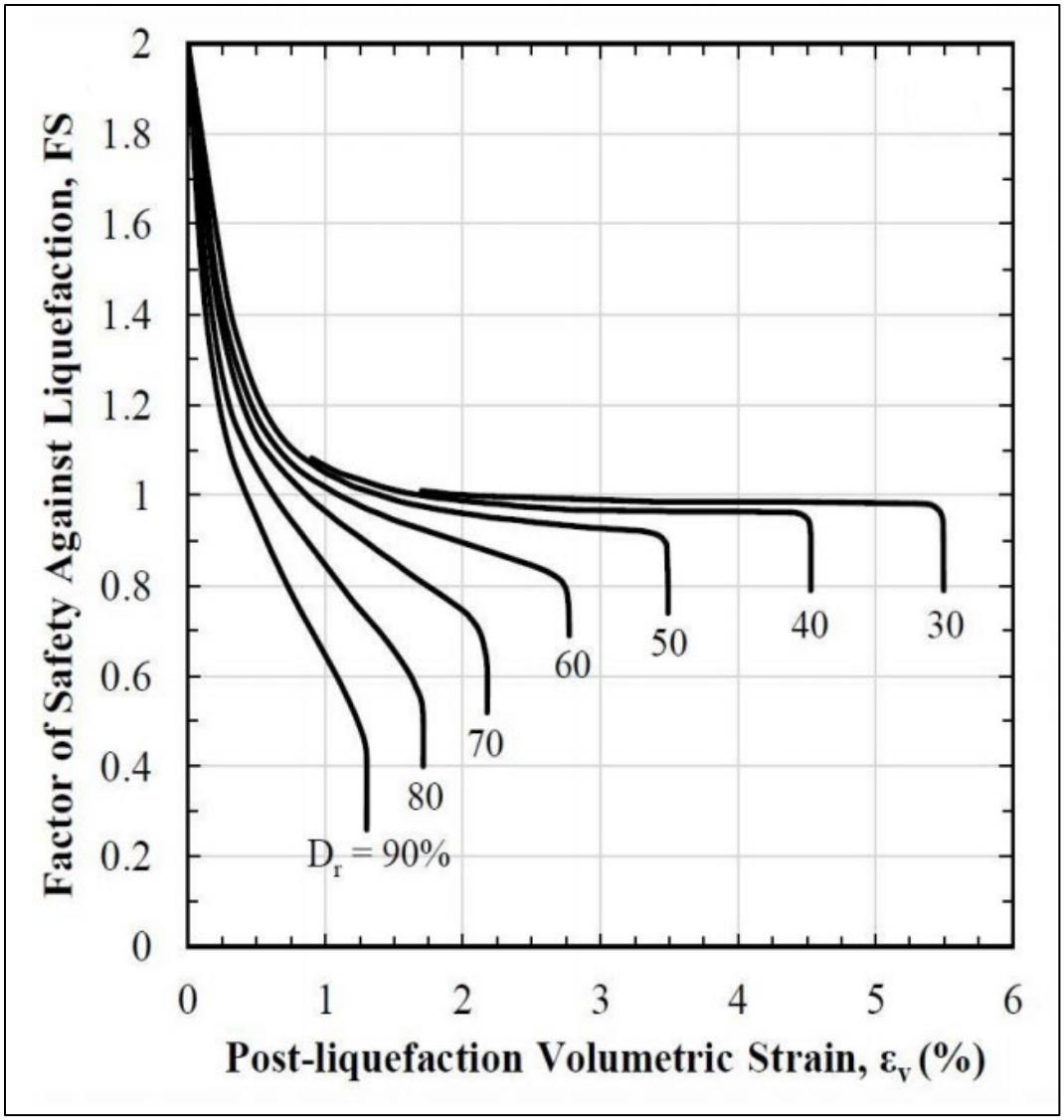

Figure 17.2. Post-Liquefaction Volumetric Strains Versus Factor of Safety Against Liquefaction (Ishihara and Yoshimine, 1992)

17.8.4. A wall should be evaluated for effects resulting from induced settlement of the adjacent ground. Pile and sheet pile downdrag should be evaluated considering during earthquake and post-earthquake settlement and the guidance from section 8.6.

17.9. Accumulation of Structural Displacements During Cyclic Loading.

17.9.1. The methods in this section are more focused on displacements in the influence of a retaining structure. The methods referenced in section 17.10.2 are more applicable to movements that develop on a global scale or in free field site conditions. The amount of displacement that can be tolerated by a structure is dependent on the use and type of structure. For critical hydraulic retaining structures that are permanently or frequently loaded, horizontal displacements should be limited to limit cracking potential.

17.9.2. Accumulation of lateral displacement can lead to seismically induced cracking. Pells and Fell (2003) evaluated damages in embankment dams due to cracking and their implications for internal erosion. Based on their study, transverse cracking is highly likely when longitudinal cracks develop that are 30 mm (1.2 in.) wide or greater. For hydraulically loaded walls, transverse cracking could create a continuous seepage path with the potential for internal erosion. Mitigating designs features include reducing horizontal displacement of the structure, providing a downstream filtered exit, and reducing differential settlement along the length of the wall. Fell et al. (2008) provides a procedure that can be used to assess cracking and erosion potential.

17.9.3. Ebeling and Morrison (1992) reference post-earthquake damage surveys of waterfront anchored sheet pile walls. The surveys suggest that no damage was observed with less than 1-inch of lateral displacement at the top of the sheet pile. Negligible damage was observed with 4 in. (10 cm), or less, of lateral displacement. Significant damage was observed with greater than 12 in. (30 cm) of lateral displacement at the top of the sheet pile. ASCE 7-16 has tolerable limits on lateral displacements for shallow foundations when project specific guidance for walls are not provided. Tolerable displacements for pile-founded structures will be dependent on pile lateral and structural capacity, reference EM 1110-2-2906.

17.9.4. If the soils are not susceptible to SSL, then pseudostatic stability analyses alone may be appropriate for design. This is true provided that the minimum factor of safety for each performance mode is achieved. The computation of the permanent seismically induced ground movement for retaining structures, using a Newmark sliding block type of analysis, is also useful data for the designer. This is especially so in the case of transition walls and multi-functional walls.

17.9.5. Ebeling and Morrison (1992) present the Whitman (1990) approach for estimating permanent relative displacements (d_r) and application of it to gravity retaining walls. Updated methods have also been developed. USACE software, CWSlip, was developed to specifically analyze deformations of retaining wall systems when acceleration time histories are available for design or analysis.

17.9.6. Newmark sliding block methods can be used to estimate lateral displacement of embankments and walls. These methods assume that the deformation occurs on a well-defined failure surface, the yield acceleration remains constant, and the soil is perfectly plastic. These assumptions apply to seismic slope stability and lateral displacements of retaining walls that are not significantly affected by liquefaction or other strength loss.

17.9.7. Anderson, et al. (2008) provides Newmark sliding block methods that are presented in Equations 17.3 and 17.4. These equations were developed for estimating mean displacements for retaining walls, slopes, and embankments. The 84th percent confidence levels can be reasonably estimated by multiplying the mean by a factor of 2. Equations for computing ground displacement at sites in WUS and central and eastern United States (CEUS) are:

17.9.7.1. For WUS Soil and Rock sites and CEUS-Soil sites:

$$\log(d) = -1.51 - 0.74\log\left(\frac{k_y}{k_{max}}\right) + 3.27\log\left(1 - \frac{k_y}{k_{max}}\right) - 0.80\log(k_{max}) + 1.59\log(PGV)$$

(Equation 17.3)

17.9.7.2. For CEUS-Rock sites:

$$\log(d) = -1.31 - 0.93\log\left(\frac{k_y}{k_{max}}\right) + 4.52\log\left(1 - \frac{k_y}{k_{max}}\right) - 0.46\log(k_{max}) + 1.12\log(PGV)$$

(Equation 17.4)

Where:

d = Lateral displacement, inches

k_y = Yield acceleration (acceleration where FS=1.0 from limit equilibrium analysis), g

k_{max} = site adjusted peak ground acceleration, g

PGV = peak ground velocity, inches/second

17.9.8. Equations 17.3 and 17.4 may be used with either a sliding analysis or general limit equilibrium slope stability software to determine the yield acceleration (k_y). A factor of safety of more than 1.0 when using k_{max} in the limit equilibrium analysis implies that no movement will occur.

17.9.9. Designers can use a displacement-based design approach using a Newmark method (Equations 17.3 and 17.4) when trying to limit wall displacements. Ebeling and Morrison (1992) present examples of displacement-based design approach. This approach can be summarized in the following steps:

17.9.9.1. Determine a tolerable horizontal displacement (*d*). Note: This displacement tolerance should be carefully developed considering performance of the floodwall during the post-earthquake highwater event.

17.9.9.2. Use a Newmark method to determine a maximum acceleration coefficient (k_h) by setting $k_h = k_y$ in Equations 17.3 and 17.4, k_{max} and PGV will be known parameters based on return period for event.

17.9.9.3. Calculate inertial loads acting on the structure (structure inertia, backfill inertia, and hydrodynamic) using the k_h calculated in b.

17.9.9.4. Reduced shear strengths are used for soils susceptible to SSL, if present.

17.9.9.5. Size the wall foundation to satisfy minimum sliding FS or FS using general limit equilibrium software to 1.0 using the loads in c. and resistance in d.

17.9.9.6. Verify that all other stability criteria for other performance modes is achieved.

17.10. Slope Stability, Flow Slides, and Lateral Spreading.

17.10.1. Soils Not Susceptible to Cyclic SSL. There are two widely used methods for evaluating seismic slope stability. These include a limit equilibrium design approach and a displacement-based design approach. It is often important to consider both, especially when designing a structure that may be less tolerable to displacements than earthen embankments.

17.10.1.1. Using the limit equilibrium approach, a horizontal seismic coefficient (k_h) equal to 50 percent of the site-adjusted PGA is used in a pseudostatic stability analysis. Minimum factors of safety are typically 1.1 to 1.2. The use of the seismic coefficient and minimum factor of safety implies that a few inches to a few feet of displacement are tolerable. Estimates for lateral displacement can be calculated to better inform the designer.

17.10.1.2. The displacement-based approach consists of using a pseudostatic limit equilibrium analysis to determine a yield acceleration (k_y) for the critical slide mass. The yield acceleration is compared to the site adjusted peak ground acceleration (refer to section 6.9) to determine the displacement potential using Equations 17.3 and 17.4. The designer will evaluate the displacements and compare those to performance requirements.

17.10.2. Soils Susceptible to SSL. Potential for flow slides and lateral spreading should be evaluated for sites with soils that are susceptible to SSL. Reference section 17.9 for tolerable displacement criteria.

17.10.2.1. Flow slides or post-earthquake slope instability occur when the static driving shear stress is larger than the resisting strengths. They are associated with large deformations. Limit equilibrium slope stability modeling can be used to assess the potential for flow failure. For this analysis, the static strength properties of the soil layer(s) susceptible to SSL are replaced with their post-earthquake reduced shear strength (refer to section 17.7) and potential cracks need to be incorporated. Then a conventional limit equilibrium static slope stability analysis is conducted. No seismic coefficient is applied during this evaluation, thus representing conditions after completion of earthquake shaking.

17.10.2.2. If the factor of safety in the post-earthquake slope stability analysis is determined to be greater than 1.2, it is likely that the embankment will not develop displacement leading to flow failure. If the factor of safety is lower than 1.0 then flow failure with associated large displacements is predicted. Newmark-type methods or full numeric modeling may be warranted to evaluate deformations for factors of safety between 1.0 and 1.2. The estimation of the displacements associated with a lateral flow failure cannot be easily made without full numeric modeling.

17.10.2.3. It should be noted that even with a limited deformation in the embankment, the performance of the floodwall or hydraulic retaining walls in post-earthquake conditions would depend on the location of deformations compared with the floodwall or hydraulic retaining walls. It would also depend on potential cracks adjacent to the wall, formation of cracks in the walls, etc.

17.10.2.4. Lateral spreading, or earthquake induced deformation, occurs when the static plus seismically induced shear stresses exceed the resistance, often reduced by the earthquake, provided by the soil. In lateral spreading, the static factor of safety of the soil mass is greater than 1.0, but lateral movements accumulate during the earthquake. Displacement of a liquefied layer or displacement of an upper, non-liquefied layer, above a liquefied layer can occur on gently sloping ground or on embankments. The potential for lateral movements due to lateral spreading is increased if there is a “free face,” such as a retaining wall or riverbank, in the laterally spreading mass. Usually cracks are associated with movement of sliding masses in lateral spreading.

17.10.2.5. Horizontal displacements from lateral spreading of sites on near level ground can be estimated using empirical and semiempirical methods. The multi-linear regression (MLR) (Youd, et al., 2002) was developed for sites with sloping ground and for relatively level ground with a “free face” toward which lateral displacements may occur. The shear strain potential procedure by Zhang, et al. (2004) developed methods to estimate lateral spreading that considers estimated shear strain from empirical methods, distance to free face, free face height, and slope of the site. Simplified expressions to use in the calculations were developed by Idriss and Boulanger (2008). Results from both methods could underestimate or overestimate lateral displacements by a factor of two. The resulting estimates of the simplified methods are valid for up to 2 to 3 ft. (0.6 to 0.9 m) of lateral spreading.

17.10.2.6. For sheet pile and pile-founded walls, if the stratum susceptible to cyclic SSL is above the pile tip then estimates for lateral spreading, as provided by Youd, et al. (2002) and Zhang, et al. (2004), and may be conservative. Therefore, full numerical modeling may be necessary to determine resisting effects provided by the pile. If the pile tip is embedded in a potentially liquefiable or soft soil (potential for cyclic strain softening), the floodwall or hydraulic retaining wall may result in higher displacements than floodwalls or hydraulic retaining walls embedded in dense of stiff soils.

17.10.2.7. Newmark-type methods can also be used to estimate horizontal displacements from embankment loading. Refer to section 17.9 for discussion of these methods. The results are sometimes assumed to produce conservative estimates since the calculation of the yield acceleration assumes that strength loss occurs immediately at the start of the earthquake (Kavazanjian, et al., 2016). When flow failure is not predicted, the current practice for estimating lateral spread assumes a dominant failure plane at the base of a liquefied layer, if present. The evaluations for determining the yield acceleration should consider reduced shear strengths and seismically generated excess pore water pressures, as described in section 17.7.

17.11. Additional Considerations for Walls Supported by Deep Foundations.

17.11.1. The presence of soils susceptible to cyclic SSL will result in reduced axial and lateral pile capacities from the soil. This places more of a demand on the structural elements when compared to a non-liquefied case. Pile axial and lateral capacities should be evaluated according to EM 1110-2-2906 considering the seismic loading. The shear strength for soil layers susceptible to SSL should be replaced with reduced shear strengths and seismically generated excess pore water pressures, as outlined in section 17.7. The static shear strengths should be used for soils not susceptible to SSL.

17.11.2. Piles that penetrate through liquefiable zones can have some effect on the structure's resistance to movement. The FHWA and several State departments of transportation, have developed analysis procedures for pile supported bridges. The findings from National Cooperative Highway Research Program (NCHRP) Report 472 have been incorporated into FHWA NHI-11-032 (Kavazanjian, et al, 2011). They can also be adapted for use to evaluate liquefaction induced movements for pile-founded retaining walls. The general guidance for this method has been used to further develop procedures using p-y curve-based lateral pile analysis in WSDOT WA-RD 874.2 (Arduino et al., 2017), and California Department of Transportation (2017).

17.11.3. The steps for evaluation from Kavazanjian, et al. (2011) are briefly described as follows. However, the referenced guidance should be thoroughly reviewed as it provides the complete steps.

17.11.3.1. Slope stability analyses are conducted for the liquefied state using reduced shear strengths to determine the post-liquefaction yield acceleration and the associated failure surface (normally associated with the deepest soil layer showing liquefaction potential). This step may include consideration of the pinning effects of the piles our ground improvement.

17.11.3.2. Newmark sliding block analyses (reference section 17.9) are performed using the post-liquefaction yield acceleration to estimate the post-liquefaction displacements of the soil-pile system.

17.11.3.3. Forces on the structure and its foundation due to the lateral spreading movements are calculated.

17.11.3.4. Plastic hinge mechanisms that are likely to develop in foundation elements are determined.

17.12. Additional Considerations for Anchored Walls and Post-Tensioned Tieback Walls.

17.12.1. There have been a very few documented cases of waterfront anchored walls that have survived earthquakes (Ebeling and Morrison, 1992). If widespread liquefaction occurs, then historical evidence indicates that anchor wall failures are very likely (Kramer 1996). Kramer (1996) states that seismic performance of permanent tieback retaining walls has received relatively little attention. P-T anchors and the embedded portion of the wall are critical to the stability of the wall. A loss of shear strength along the anchor bond zone or in the passive zone of the embedded wall may result in overall failure of the wall.

17.12.2. As a general design principle, anchored sheet pile walls sited in seismic environments should be founded in dense and dilative cohesionless soils with no silt or clay size particles. Anchors should not be located in zones susceptible to cyclic SSL ($FS_{liq} \leq 1.4$ or $FS_{cs} < 1.0$). Anchors can be lengthened and wall embedment can be made deeper to mitigate effects of these zones. Design examples for rotational stability and anchor stability is provided in Ebeling and Morrison (1992). The strength of the structural elements for the wall and anchor should be evaluated considering the seismic loading.

17.12.3. Whitman (1990) presents a methodology for estimating permanent lateral displacements of tieback walls following an earthquake event. Anderson, et al. (2008) references the Whitman (1990) paper and provides some additional guidance for use when evaluating displacements of anchored walls. The steps for estimating permanent lateral displacement for an anchored wall, as presented in Anderson, et al. (2008), are as follows:

17.12.3.1. General limit equilibrium software or hand calculations are used to perform pseudostatic stability analysis. Reduced shear strengths are used for soils susceptible to SSL, if present.

17.12.3.2. Anchor loads (if present) are modeled as an external force oriented along the axis of the tie rods.

17.12.3.3. Yield acceleration is determined, and deformation is estimated using an empirical method by Whitman (1990) or other similar Newmark methods presented in section 17.9. Ebeling and Morrison (1992) Equation 92 presents Whitman's method for estimating permanent relative displacements (*dr*). No reductions in the peak ground acceleration should be used when calculating the displacement.

17.12.3.4. The calculated deformation results in elongation of the anchor tie rods. This results in an increased reaction on the wall that can be calculated using conventional stress-strain relationships.

17.12.3.5. The analyses are repeated until there is compatibility between deformations and anchor reaction.

17.12.3.6. The final force is checked against capacity of the tie rod and anchor.

17.12.4. When assessing post-earthquake induced settlements, differential movement between the anchor and the sheet pile should be evaluated as it could result in increased forces on the tie rods.

17.13. Full Numeric Analysis of Seismic Performance. Use of full numeric analysis methods (also known as nonlinear seismic deformation analyses) for analyses of foundation or embankments that may impact floodwall and hydraulic retaining wall design can result in more accurate prediction of deformations when properly verified and validated. The use of full numeric methods should be based on the importance of the structure and site-specific conditions.

17.14. Mandatory Requirements. There are no mandatory requirements in this chapter.

Appendix A
References and Units Conversion

A.1. Required Publications.

A.1.1. USACE Publications.

A.1.1.1. Engineer Regulations.

1. ER 1105-2-100, Planning Guidance Notebook. https://www.publications.usace.army.mil/Portals/76/Publications/EngineerRegulations/ER_1105-2-100.pdf?ver=2013-09-08-233404-497.
2. ER 1105-2-101, Risk Analysis for Flood Risk Management Studies. https://www.publications.usace.army.mil/Portals/76/Publications/EngineerRegulations/ER_1105-2-101.pdf?ver=2017-07-27-075022-627.
3. ER 1110-1-261, Quality Assurance of Laboratory Testing Procedures. https://www.publications.usace.army.mil/Portals/76/Publications/EngineerRegulations/ER_1110-1-261.pdf?ver=2013-09-08-233408-340.
4. ER 1110-1-1807, Drilling in Earth Embankment Dams and Levees. https://www.publications.usace.army.mil/Portals/76/Publications/EngineerRegulations/ER_1110-1-1807.pdf?ver=2014-12-19-132140-657.
5. ER 1110-1-8100, Laboratory Investigations and Testing. https://www.publications.usace.army.mil/Portals/76/Publications/EngineerRegulations/ER_1110-1-8100.pdf?ver=2013-09-08-233409-887.
6. ER 1110-2-401, Operation, Maintenance, Repair, Replacement, and Rehabilitation Manual for Projects and Separable Elements Managed by Project Sponsors. https://www.publications.usace.army.mil/Portals/76/Publications/EngineerRegulations/ER_1110-2-401.pdf.
7. ER 1110-2-1150, Engineering and Design of Civil Works Projects. https://www.publications.usace.army.mil/Portals/76/Publications/EngineerRegulations/ER_1110-2-1150.pdf.
8. ER 1110-2-1156, Safety of Dams – Policies and Procedures. https://www.publications.usace.army.mil/Portals/76/Publications/EngineerRegulations/ER_1110-2-1156.pdf.
9. ER 1110-2-1806, Earthquake Design and Evaluation for Civil Works Projects. https://www.publications.usace.army.mil/Portals/76/Publications/EngineerRegulations/ER_1110-2-1806.pdf.
10. ER 1110-2-8159, Life Cycle Design and Performance. https://www.publications.usace.army.mil/Portals/76/Publications/EngineerRegulations/ER_1110-2-8159.pdf?ver=2013-09-08-233429-950.

11. ER 1130-2-500, Partners and Support (Work Management Policies). https://www.publications.usace.army.mil/Portals/76/Publications/EngineerRegulations/ER_1130-2-500.pdf?ver=2013-09-08-233436-167.
12. ER 1130-2-530, Flood Control Operations and Maintenance Policies. https://www.publications.usace.army.mil/Portals/76/Publications/EngineerRegulations/ER_1130-2-530.pdf?ver=2013-09-08-233436-963.

A.1.1.2. Engineer Manuals.

1. EM 385-1-1, Safety and Health Requirements. https://www.publications.usace.army.mil/Portals/76/Publications/EngineerManuals/EM_385-1-1.pdf.
2. EM 1110-1-1804, Geotechnical Investigations. https://www.publications.usace.army.mil/Portals/76/Publications/EngineerManuals/EM_1110-1-1804.pdf.
3. EM 1110-1-1904, Settlement Analysis. https://www.publications.usace.army.mil/Portals/76/Publications/EngineerManuals/EM_1110-1-1904.pdf?ver=2013-09-04-070854-997.
4. EM 1110-1-1905, Bearing Capacity of Soils. https://www.publications.usace.army.mil/Portals/76/Publications/EngineerManuals/EM_1110-1-1905.pdf?ver=2013-09-04-070743-390.
5. EM 1110-1-2009, Architectural Concrete. https://www.publications.usace.army.mil/Portals/76/Publications/EngineerManuals/EM_1110-1-2009.pdf?ver=PXBTWVdYTGRsU--kgq2nnA%3d%3d.
6. EM 1110-1-4000, Monitoring Well Design, Installation, and Documentation at Hazardous Toxic, and Radioactive Waste Sites. https://www.publications.usace.army.mil/Portals/76/Publications/EngineerManuals/EM_1110-1-4000.pdf?ver=2013-09-04-070745-563.
7. EM 1110-2-1100, Coastal Engineering Manual. Part VI. https://www.publications.usace.army.mil/Portals/76/Publications/EngineerManuals/EM_1110-2-1100_Part-04.pdf?ver=DkahFVbeNaj4g3k3zARKoQ%3d%3d.
8. EM 1110-2-1205, Environmental Engineering for Flood Control Channels. https://www.publications.usace.army.mil/Portals/76/Publications/EngineerManuals/EM_1110-2-1205.pdf?ver=2013-09-04-070754-657.
9. EM 1110-2-1601, Hydraulic Design of Flood Control Channels. https://www.publications.usace.army.mil/Portals/76/Publications/EngineerManuals/EM_1110-2-1601.pdf.

10. EM 1110-2-1612, Ice Engineering. https://www.publications.usace.army.mil/Portals/76/Publications/EngineerManuals/EM_1110-2-1612.pdf.
11. EM 1110-2-1614, Design of Coastal Revetments, Seawalls, and Bulkheads. https://www.publications.usace.army.mil/Portals/76/Publications/EngineerManuals/EM_1110-2-1614.pdf.
12. EM 1110-2-1901, Seepage Analysis and Control for Dams. https://www.publications.usace.army.mil/Portals/76/Publications/EngineerManuals/EM_1110-2-1901.pdf.
13. EM 1110-2-1902, Slope Stability. https://www.publications.usace.army.mil/Portals/76/Publications/EngineerManuals/EM_1110-2-1902.pdf.
14. EM 1110-2-1908, Instrumentation of Embankment Dams and Levees. https://www.publications.usace.army.mil/Portals/76/Publications/EngineerManuals/EM_1110-2-1908.pdf.
15. EM 1110-2-1911, Construction Control for Earth and Rock-Fill Dams. https://www.publications.usace.army.mil/Portals/76/Publications/EngineerManuals/EM_1110-2-1911.pdf.
16. EM 1110-2-1913, Design and Construction of Levees. https://www.publications.usace.army.mil/Portals/76/Publications/EngineerManuals/EM_1110-2-1913.pdf.
17. EM 1110-2-1914, Design, Construction, and Maintenance of Relief Wells. https://www.publications.usace.army.mil/Portals/76/Publications/EngineerManuals/EM_1110-2-1914.pdf.
18. EM 1110-2-2000, Standard Practice for Concrete for Civil Works Structures Proponent: CECW-EG. https://www.publications.usace.army.mil/Portals/76/Publications/EngineerManuals/EM_1110-2-2000.pdf?ver=2013-09-04-070813-170.
19. EM 1110-2-2002, Evaluation and Repair of Concrete Structures. https://www.publications.usace.army.mil/Portals/76/Publications/EngineerManuals/EM_1110-2-2002.pdf.
20. EM 1110-2-2006, Roller Compacted Concrete. https://www.publications.usace.army.mil/Portals/76/Publications/EngineerManuals/EM_1110-2-2006.pdf.
21. EM 1110-2-2100, Stability Analysis of Concrete Structures. https://www.publications.usace.army.mil/Portals/76/Publications/EngineerManuals/EM_1110-2-2100.pdf.

22. EM 1110-2-2102, Water Stops and Other Preformed Joint Materials for Civil Works Structures. https://www.publications.usace.army.mil/Portals/76/Publications/EngineerManuals/EM_1110-2-2102.pdf?ver=2013-09-04-070816-187.
23. EM 1110-2-2104, Strength Design for Reinforced Concrete Hydraulic Structures. https://www.publications.usace.army.mil/Portals/76/Publications/EngineerManuals/EM_1110-2-2104.pdf.
24. EM 1110-2-2107, Design for Hydraulic Steel Structures. https://www.publications.usace.army.mil/Portals/76/Publications/EngineerManuals/EM_1110-2-2107.pdf.
25. EM 1110-2-2200, Gravity Dam Design. https://www.publications.usace.army.mil/Portals/76/Publications/EngineerManuals/EM_1110-2-2200.pdf.
26. EM 1110-2-2201, Arch Dam Design. https://www.publications.usace.army.mil/Portals/76/Publications/EngineerManuals/EM_1110-2-2201.pdf.
27. EM 1110-2-2503, Design of Sheet Pile Cellular Structures Cofferdams and Retaining Structures. https://www.publications.usace.army.mil/Portals/76/Publications/EngineerManuals/EM_1110-2-2503.pdf?ver=2013-09-04-070820-547.
28. EM 1110-2-2602, Planning and Design of Navigation Locks. https://www.publications.usace.army.mil/Portals/76/Publications/EngineerManuals/EM_1110-2-2602.pdf?ver=2014-05-13-100728-140.
29. EM 1110-2-2607, Planning and Design of Navigation Dams. https://www.publications.usace.army.mil/Portals/76/Publications/EngineerManuals/EM_1110-2-2607.pdf?ver=2013-09-04-070822-140.
30. EM 1110-2-2902, Conduits, Culverts, and Pipes. https://www.publications.usace.army.mil/Portals/76/Publications/EngineerManuals/EM_1110-2-2902.pdf.
31. EM 1110-2-2906, Design of Pile Foundations. https://www.publications.usace.army.mil/Portals/76/Publications/EngineerManuals/EM_1110-2-2906.pdf?ver=2013-09-04-070827-700.
32. EM 1110-2-3001, Planning and Design of Hydroelectric Powerplant Structures. https://www.publications.usace.army.mil/Portals/76/Publications/EngineerManuals/EM_1110-2-3001.pdf?ver=2013-09-04-070828-357.
33. EM 1110-2-3104, Structural and Architectural Design of Pumping Stations. https://www.publications.usace.army.mil/Portals/76/Publications/EngineerManuals/EM_1110-2-3104.pdf.

34. EM 1110-2-3400, Painting: New Construction and Maintenance. https://www.publications.usace.army.mil/Portals/76/Publications/EngineerManuals/EM_1110-2-3400.pdf?ver=2013-09-04-070832-857.
35. EM 1110-2-3402, Barge Impact Force for Hydraulic Structures.
36. EM 1110-2-4300, Instrumentation of Concrete Structures. https://www.publications.usace.army.mil/Portals/76/Publications/EngineerManuals/EM_1110-2-4300.pdf.
37. EM 1110-2-6050, Response Spectra and Seismic Analysis for Concrete Hydraulic Structures. https://www.publications.usace.army.mil/Portals/76/Publications/EngineerManuals/EM_1110-2-6050.pdf?ver=2013-09-04-072951-213.
38. EM 1110-2-6051, Time-History Dynamic Analysis of Concrete Hydraulic Structure. https://www.publications.usace.army.mil/Portals/76/Publications/EngineerManuals/EM_1110-2-6051.pdf?ver=2013-09-04-102314-930.
39. EM 1110-2-6053, Earthquake Design and Evaluation of Concrete Hydraulic Structures. https://www.publications.usace.army.mil/Portals/76/Publications/EngineerManuals/EM_1110-2-6053.pdf.
40. EM 1110-2-6054, Inspection, Evaluation, and Repair of Hydraulic Steel Structures. https://www.publications.usace.army.mil/Portals/76/Publications/EngineerManuals/EM_1110-2-6054.pdf?ver=2013-09-04-072953-853.

A.1.1.3. Engineer Pamphlets.

1. EP 1110-2-12. Seismic Design Provisions for Roller Compacted Concrete Dams. https://www.publications.usace.army.mil/Portals/76/Publications/EngineerPamphlets/EP_1110-2-12.pdf?ver=7nDIqi5amkeZBfWw9G5LPA%3d%3d.
2. EP 1110-2-18, Guidelines for Landscape Planting and Vegetation Management at Levees, Floodwalls, Embankment Dams and Appurtenant Structures. https://www.publications.usace.army.mil/Portals/76/Users/182/86/2486/EP_1110-2-18.pdf?ver=bVt-L-DvQrASeFS6szPNaw%3d%3d.

A.1.2. Technical Manuals.

1. TM 3-424, Investigation of Underseepage and Its Control, Lower Mississippi River Levees, Technical Memorandum. U.S. Army Engineer Waterways Experiment Station, Vicksburg, MS, 1956. Unified Facilities Manuals.

A.1.3. Unified Facilities Criteria.

1. UFC 4-152-01. Design: Piers and Wharves. Unified Facilities Criteria (UFC), 2017. https://www.wbdg.org/ffc/dod/unified-facilities-criteria-ufc/ufc-4-152-01.

A.1.4. Guide Specifications.

1. UFGS 31 05 22, Geotextiles Used as Filters, Unified Facilities Guide Specification, 2008. https://www.wbdg.org/ffc/dod/unified-facilities-guide-specifications-ufgs/ufgs-31-05-22.

A.1.5. Industry Standards and Specifications.

A.1.5.1. American Association of State Highway and Transportation Officials.

1. AASHTO LRFD Bridge Design Specifications 9th ed. 2020. Washington, DC. https://www.fhwa.dot.gov/bridge/pubs/nhi15047.pdf.
2. AASHTO T-290. Standard Method of Test for Determining Water-Soluble Sulfate Ion Content in Soil. 2016. Washington, DC. https://www.techstreet.com/standards/aashto-t-290-95-2016?product_id=1321069.
3. AASHTO T-291. Standard Method of Test for Determining Water-Soluble Chloride Ion Content in Soil. 1994. Washington, DC. https://standards.globalspec.com/std/13053351/aashto-t-291.

A.1.5.2. American Concrete Institute.

1. ACI 209.2R. Guide for Modeling and Calculating Shrinkage and Creep in Hardened Concrete. Reported by ACI Committee 209. May 2008. https://www.concrete.org/Portals/0/Files/PDF/Previews/209.2R-08web.pdf.
2. ACI 224.1R. Causes, Evaluation, and Repair of Cracks in Concrete Structures. 2007. Farmington Hills, MI. https://studylib.net/doc/18550529/aci-224.1r-07-causes--evaluation--and-repair-of-cracks-in.
3. ACI 318. Building Code Requirements for Structural Concrete. 2019. Farmington Hills, MI. https://concrete.org/publications/standards.aspx.
4. ACI 440.2R. Guide for the Design and Construction of Externally Bonded FRP Systems for Strengthening Concrete Structures. 2017. Farmington Hills, MI. https://www.concrete.org/store/productdetail.aspx?ItemID=440217&Language=English&Units=US_AND_METRIC.

A.1.5.3. American Institute of Steel Construction.

1. ANSI/AISC 360-16. Specification for Structural Steel Buildings, 2016. Chicago, IL. https://www.aisc.org/publications/.

A.1.5.4. American Railway Engineering and Maintenance-of-Way Association.

1. AREMA Manual of Railway Engineering. 2018. Washington, DC. https://www.arema.org/AREMA_MBRR/AREMA_MBRR/AREMAStore/MRE.aspx.

A.1.5.5. American Society of Civil Engineers.

1. ASCE 7-16, Minimum Design Loads for Buildings and Other Structures. 2016. Structural Engineering Institute. https://www.asce.org/structural-engineering/asce-7-and-sei-standards/.

A.1.5.6. American Society for Testing and Materials.

1. ASTM A328. Standard Specification for Steel Sheet Piling. ASTM International, West Conshohocken, PA. https://www.astm.org/Standards/A328.htm.
2. ASTM A572. Standard Specification for High-Strength Low-Alloy Columbium Vanadium Structural Steel. ASTM International, West Conshohocken, PA. https://www.astm.org/Standards/A572.
3. ASTM A615. Standard Specification for Deformed and Plain Carbon-Steel Bars for Concrete Reinforcement. ASTM International, West Conshohocken, PA. https://www.astm.org/Standards/A615.htm.
4. ASTM A690. Standard Specification for High-Strength Low-Alloy Nickel, Copper, Phosphorus Steel H-Piles and Sheet Piling with Atmospheric Corrosion Resistance for Use in Marine Environments. ASTM International, West Conshohocken, PA. https://www.astm.org/Standards/A690.htm.
5. ASTM A706. Specification for Low-Alloy Steel Deformed and Plain Bars for Concrete Reinforcement. 2016. ASTM International, West Conshohocken, PA. https://www.astm.org/Standards/A706.htm.
6. ASTM A981. Standard Test Method for Evaluating Bond Strength for 0.600-in. [15.24-mm] Diameter Steel Prestressing Strand, Grade 270 [1860], Uncoated, Used in Prestressed Ground Anchors. ASTM International, West Conshohocken, PA. https://www.astm.org/Standards/A981.htm.
7. ASTM D1125. Standard Test Methods for Electrical Conductivity and Resistivity of Water. ASTM International, West Conshohocken, PA. https://www.astm.org/Standards/D1125.htm.
8. ASTM D1586. Standard Test Method for Standard Penetration Test (SPT) and Split-Barrel Sampling of Soils. ASTM International, West Conshohocken, PA. https://www.astm.org/Standards/D1586.htm.
9. ASTM D2166. Standard Test Method for Unconfined Compressive Strength of Cohesive Soil. ASTM International, West Conshohocken, PA. https://www.astm.org/Standards/D2166.htm.
10. ASTM D2487. Standard Practice for Classification of Soils for Engineering Purposes (Unified Soil Classification System). ASTM International, West Conshohocken, PA. https://www.astm.org/DATABASE.CART/HISTORICAL/D2487-11.htm.

11. ASTM D2488. Standard Practice for Description and Identification of Soils (Visual-Manual Procedure). ASTM International, West Conshohocken, PA. https://socwisconsin.org/wp-content/uploads/2017/01/ASTM-D-2488-visual-USCS.pdf.
12. ASTM D2573. Standard Test Method for Field Vane Shear Test in Saturated Fine-Grained Soils. ASTM International. West Conshohocken, PA. https://www.astm.org/DATABASE.CART/HISTORICAL/D2573D2573M-15.htm.
13. ASTM D4216. Standard Specification for Rigid Poly (Vinyl Chloride) (PVC) and Related PVC and Chlorinated Poly (Vinyl Chloride) (CPVC) Building Products Compounds. ASTM International, West Conshohocken, PA. https://www.astm.org/Standards/D4216.htm
14. ASTM D4972. Standard Test Method for pH of Soils. ASTM International, West Conshohocken, PA. https://www.astm.org/DATABASE.CART/HISTORICAL/D4972-13.htm.
15. ASTM D5778. Standard Test Method for Electronic Friction Cone and Piezocone Penetration Testing of Soils. ASTM International, West Conshohocken, PA. http://bolandist.com/media/6441/astm-d5778-12.pdf.
16. ASTM D8427-21. Standard Specification for Rigid Poly Vinyl Chloride (PVC) Exterior Profiles Used for Sheet Piling. ASTM International, West Conshohocken, PA. https://www.astm.org/Standards/D8427-21.htm.

A.1.5.7. Federal Emergency Management Agency.

1. Federal Emergency Management Agency (FEMA), 2011. Filters for Embankment Dams – Best Practices for Design and Construction. Washington, DC. https://www.hsdl.org/?abstract&did=696738.
2. FEMA 356, Prestandard and Commentary for the Seismic Rehabilitation of Buildings. Federal Emergency Management Agency. November 2000. https://www.conservationtech.com/FEMA-publications/FEMA356-2000.pdf.

A.1.5.8. International Organization for Standardization.

1. ISO 9001:2015, Quality Management Systems. https://www.iso.org/standard/62085.html.

A.2. Related Publications.

1. Abraham, K. 2007. Three Dimensional Behavior of Retaining Wall Systems. PhD Thesis, Louisiana State University. https://digitalcommons.lsu.edu/gradschool_dissertations/1301/.

2. Adams, T. E. 2011. Stability of Levees and Floodwalls Supported by Deep-Mixed Shear Walls: Five Case Studies in the New Orleans Area. PhD Thesis, Virginia Polytechnic and State University. https://vtechworks.lib.vt.edu/handle/10919/29065.

3. Andersen K. H., and K. Schjetne. 2013. Database of Friction Angles of Sand and Consolidation Characteristics of Sand, Silt, and Clay. Journal of Geotechnical and Geoenvironmental Engineering 139.7: 1140–1155. https://ascelibrary.org/doi/10.1061/%28ASCE%29GT.1943-5606.0001030.

4. Anderson, D. G., G.R. Martin, I. Lam, and J.N. Wang. 2008. Seismic Analysis and Design of Retaining Walls, Buried Structures, Slopes, and Embankments, NCHRP Report 611, Transportation Research Board, Washington DC. http://www.trb.org/Main/Blurbs/160387.aspx.

5. Arduino, P., C.R. McGann, and A. Ghofrani. 2017. Design Procedure for Bridge Foundations Subject to Liquefaction-Induced Lateral Spreading, Washington State Department of Transportation, WSDOT Research Report 784.2. https://www.wsdot.wa.gov/research/reports/fullreports/874-2.pdf.

6. Atkinson, J. 2000. Non-Linear Soil Stiffness in Routine Design. Géotechnique 50.5: 487–508. https://www.icevirtuallibrary.com/doi/10.1680/geot.2000.50.5.487.

7. Ayyub, B. M., R. Chao, and R. C. Patev, M. A. Leggett. 1998. Reliability and Stability Assessment of Concrete Gravity Structures (RCSLIDE): Theoretical Manual. Technical Report ITL-98-6. U.S. Army Corps of Engineers Waterway Experiment Station, Vicksburg, MS. https://apps.dtic.mil/dtic/tr/fulltext/u2/a365677.pdf.

8. Bolton, M. D. 1986. The Strength and Dilatancy of Sands. Géotechnique 36.1: 65–78. https://www.icevirtuallibrary.com/doi/10.1680/geot.1986.36.1.65.

9. Boulanger, R. W. and I. M. Idriss. 2014. CPT and SPT Based Liquefaction Triggering Procedures. Report UCD/CGM-14/01. Department of Civil and Environmental Engineering. University of California, Davis, CA. pp. 138. https://faculty.engineering.ucdavis.edu/boulanger/wp-content/uploads/sites/71/2014/09/Boulanger_Idriss_CPT_and_SPT_Liq_triggering_CGM-14-01_20141.pdf.

10. Boulanger, R.W. and I. M. Idriss. 2006. Liquefaction Susceptibility Criteria for Silts and Clays. Journal of Geotechnical and Geoenvironmental Engineering. 132: 1413–1426. Liquefaction Susceptibility Criteria for Silts and Clays | Journal of Geotechnical and Geoenvironmental Engineering | Vol 132, No 11 (ascelibrary.org).

11. Boulanger, R. W. and I. M. Idriss. 2007. Evaluation of Cyclic Softening In Silts and Clays. Journal of Geotechnical and Geoenvironmental Engineering 133.6: 641–652. https://ascelibrary.org/doi/pdf/10.1061/%28ASCE%291090-0241%282007%29133%3A6%28641%29.

12. Bowles, J. E., 1982. Foundation Analysis and Design. 3rd ed. McGraw-Hill. New York.

13. Brandon, T. L., A. Batool, M. Jiminez, N.D. Vroman and M. K. Corcoran. 2018. Comparison of Levee Underseepage Analysis Methods Using Blanket Theory and Finite Element Analysis. ERDC TR-18-24. U.S. Army Engineer Research and Development Center, Vicksburg, MS. https://erdc-library.erdc.dren.mil/xmlui/handle/11681/28472.

14. Bray, J. D. and R. B. Sancio. 2006. Assessment of Liquefaction Susceptibility of Fine-Grained Soils. Journal of Geotechnical and Geoenvironmental Engineering 132: 1165–1177. https://ascelibrary.org/doi/abs/10.1061/(asce)1090-0241(2006)132:9(1165).

15. Bureau of Reclamation, 2012. Design Standards No. 13, Embankment Dams. U.S. Department of the Interior . https://www.usbr.gov/tsc/techreferences/designstandards-datacollectionguides/designstandards.html.

16. California Department of Transportation (Caltrans). 2017. Lateral Spreading Analysis for New and Existing Bridges. Memo to Designers. 20–15, May 2017. https://dot.ca.gov/-/media/dot-media/programs/engineering/documents/memotodesigner/20-15-a-1-a11y.pdf.

17. Caquot, A. I. and J. Kerisel. 1948. Tables for the Calculation of Passive Pressure, Active Pressure, and Bearing Capacity of Foundations. Paris Gauthier-Villars: Libraire du Bureau des Longitudes, de L'ecole Polytechnique. https://lib.ugent.be/en/catalog/rug01:001335589.

18. Carrol, R. G., Jr., and J. C. Murphy. 1985. Drainage Objective: Prefabricated Drainage Composites. Geotechnical Fabrics Report 3.3: 14–18.

19. Castellanos, B. A., T. L. Brandon, and D. R. VandenBerge. 2016. Correlations for Fully Softened Shear Strength Parameters. Geotechnical Testing Journal 39.4: 568–581. https://www.astm.org/DIGITAL_LIBRARY/JOURNALS/GEOTECH/PAGES/GTJ20150184.htm.

20. Cedergren, H. 1967. Seepage, Drainage, and Flow Nets. John Wiley & Sons Ltd, New York.

21. Cedergren, H. 1977. Seepage, Drainage, and Flow Nets. 2nd ed. John Wiley & Sons, New York.

22. Cetin, K.O., H.T. Bilge, J. Wu, A.M. Kammerer, and R.B. Seed. 2009. Probabilistic Model for the Assessment of Cyclically Induced Reconsolidation (Volumetric) Settlements. Journal of Geotechnical and Geoenvironmental Engineering. 135.3:387–398. https://ascelibrary.org/doi/full/10.1061/%28ASCE%291090-0241%282009%29135%3A3%28387%29.

23. Cetin, K. O, Ramond B. Seed, Robert E. Kayen, Robb E. S. Moss, H. Tolga Bilge, M. Ilgac, and K. Chowdury. 2018. SPT-based Probablistic and Deterministic Assessment of Seismic Soil Liquefaction Triggering Hazard. Soil Dynamics and Earthquake Engineering 115: 698–709. https://doi.org/10.1016/j.soildyn.2018.09.012.

24. Clough, G. W. and J. M. Duncan. 1969. Finite Element Analyses of Port Allen and Old River Locks. Report TE-69-3. USACE WES. Vicksburg, MS. http://hdl.handle.net/11681/20529.

25. Clough, G. W. and T. D. O'Rourke. 1990. Construction Induced Movements of In Situ Walls. Specialty Conference on Design and Performance of Earth Retaining Structures 1990: 439–470.

26. Clough, G. W. and Y. Tsui. 1977. Chapter 15, Static Analysis for Earth Retaining Structures. Numerical Methods in Geotechnical Engineering. Eds. Desai and Christian. McGraw Hill Book Company. New York.

27. Dawkins, W. P. 1984. User's Guide: Computer Program for Soil-Structure Interaction Analysis of Axially Loaded Piles (CAXPILE). Instructional Report K-84-4. U.S. Army Corps of Engineers Waterway Experiment Station, Vicksburg, MS. https://apps.dtic.mil/dtic/tr/fulltext/u2/a144329.pdf.

28. Dawkins, W. P. 1994. User's Gide: Computer Program for Winkler Soil-Structure Interaction Analysis of Sheet-Pile Walls (CWALSSI). Instructional Report ITL-94-5. U.S. Army Corps of Engineers Waterway Experiment Station, Vicksburg, MS. https://apps.dtic.mil/dtic/tr/fulltext/u2/a291222.pdf.

29. Dawkins, W. P. 1990. User's Guide: Computer Program for Design and Analysis of Sheet Pile Walls by Classical Methods (CWALSHT). Instructional Report ITL-90-1. U.S. Army Corps of Engineers Waterway Experiment Station, Vicksburg, MS. https://apps.dtic.mil/dtic/tr/fulltext/u2/a220932.pdf.

30. Dawkins, W. P., R.W. Strom, and R. M. Ebeling. 2003. User's Guide: Computer Program for Simulation of Construction Sequence for Stiff Wall Systems with Multiple Levels of Anchors (CMULTIANC). Structural Report ITL SR-03-1, U.S. Army Corps of Engineers Waterway Experiment Station, Vicksburg, MS. https://erdc-library.erdc.dren.mil/xmlui/handle/11681/3328.

31. Department of the Army, Corps of Engineers. 1948. Wall Design, Flood Walls. EM 1110-2-2501. Office of the Chief of Engineers.

32. Department of the Navy, 1982. Foundations and Earth Structures, Design Manual 7.2. NAVFAC DM7.2 1982. Naval Facilities Engineering Command, Alexandria, VA. https://www.scribd.com/doc/230145808/NAVFAC-Dm7-02-Foundations-and-Earth-Structures-Complete-Manual.

33. Dietz, M. S. 2000. Developing an Holistic Understanding of Interface Friction Using Sand Within the Direct Shear Apparatus. PhD Thesis, University of Bristol. https://research-information.bristol.ac.uk/en/theses/developing-an-holistic-understanding-of-interface-friction-using-sand-with-direct-shear-apparatus(55218bdd-b641-4365-a921-5a7ca0d475bc).html.

34. Doherty, J. P., and D. Muir Wood. 2013. An Extended Mohr-Coulomb Model for Predicting Settlement of Shallow Foundations on Sand. Géotechnique 63.8: 661–673. https://www.icevirtuallibrary.com/doi/10.1680/geot.12.P.008.

35. Dong, W., and N. T. Schwanz. 2011. Finite Element Soil-Pile-Interaction Analysis of Floodwall in Soft Clay. Proceedings, Geo-Frontiers Congress 2011, 4378–4387. https://ascelibrary.org/doi/10.1061/41165%28397%29448.

36. Dong, W., S. Yao, A. Hill, and N. T. Schwanz. 2012. Investigations of Stability Improvements for Submerged Berm on Soft Clay in South Louisiana. Proceedings, GeoCongress 2012. 624–633. https://ascelibrary.org/doi/10.1061/9780784412121.065.

37. Douglas, B. J., and R. S. Olsen. 1981. Soil Classification Using Electric Cone Penetrometer. Cone Penetration Testing and Experience. Eds. Norris, G.M., and Holtz, R.D., 209–227. American Society of Civil Engineers, New York.

38. Duncan, J. M., and A. L. Buchignani. 1976. An Engineering Manual for Settlement Studies. University of California, Berkeley, CA.

39. Duncan, J. M., and C. Y. Chang. 1970. Nonlinear Analysis of Stress and Strain in Soil. Journal of the Soil Mechanics and Foundation Division 96.5: 1629–1653. https://cedb.asce.org/CEDBsearch/record.jsp?dockey=0017188.

40. Duncan, J. M., G. W. Williams, A. L. Sehn, and R. B. Seed. 1991. Estimation Earth Pressures Due to Compaction. Journal of Geotechnical Engineering. 117.12: 1833–1847. https://doi.org/10.1061/(ASCE)0733-9410(1991)117:12(1833).

41. Duncan, J. M., G. W. Williams, A. L. Sehn, and R. B. Seed. 1993. Closure to "Estimation Earth Pressures Due to Compaction". Journal of Geotechnical Engineering. 119.7: 1172–1177. https://doi.org/10.1061/(ASCE)0733-9410(1993)119:7(1172).

42. Duncan, J. M., S. G. Wright, T. L. Brandon. 2014. Soil Strength and Slope Stability. 2nd ed. John Wiley and Sons. New York.

43. Duncan, J. M., T. L. Brandon, S. G. Wright, N. Vroman. 2008. Stability of I-Walls in New Orleans during Hurricane Katrina. Journal of Geotechnical and Geoenvironmental Engineering 134.5: 681–691. https://ascelibrary.org/doi/10.1061/%28ASCE%291090-0241%282008%29134%3A5%28681%29.

44. Ebeling, R. M., A. Chase, and B. C. White. 2007. Translational Response of Toe-Restrained Retaining Walls to Earthquake Ground Motions Using Corps Wall Slip (CWSlip). ERDC/ITL-TR-07-1. Information Technology Laboratory. U.S. Army Engineer Research and Development Center, Vicksburg, MS. https://apps.dtic.mil/dtic/tr/fulltext/u2/a469305.pdf.

45. Ebeling, R. M. and B. C. White. 2006. Rotating Response of Toe-Restrained Retaining Walls to Earthquake Ground Motions. ERDC/ITL-TR-06-2. Information Technology Laboratory. U.S. Army Engineer Research and Development Center, Vicksburg, MS. https://apps.dtic.mil/dtic/tr/fulltext/u2/a468663.pdf.

46. Ebeling, R. M., and B. C. White 2016. Characterizing Axial Stiffness of Individual Batter Piles with Emphasis on Elevated, Laterally Loaded, Clustered Pile Groups. Technical Report ITL-TR-16-5. Information Technology Laboratory. U.S. Army Engineer Research and Development Center, Vicksburg, MS. https://hdl.handle.net/11681/20402.

47. Ebeling, R. M. and E. E. Morrison. 1992. The Seismic Design of Waterfront Retaining Structures. Technical Report ITL-92-11/NCEL TR-939. U.S. Army Engineer Waterways Experiment Station, Vicksburg, MS. https://apps.dtic.mil/dtic/tr/fulltext/u2/a265707.pdf.

48. Ebeling, R. M., and Wahl, R. E. 1997. Soil-Structure-Foundation Interaction Analysis of New Roller-Compacted Concrete North Lock Wall at McAlpine Locks. Technical Report ITL-97-5. Department of the Army Waterways Experiment Station, Vicksburg, MS. https://hdl.handle.net/11681/10823.

49. Ebeling, R. M., B. C. White, and M. T. Fong. 2013. Simulation and Advanced Second Moment Reliability Analyses of Pile Groups Using CPGA-R: Formulation, User's Guide, and Example Problems. ERDC/ITL-TR-13-2. Information Technology Laboratory. U.S. Army Engineer Research and Development Center, Vicksburg, MS. https://erdc-library.erdc.dren.mil/jspui/bitstream/11681/10969/1/ERDC-ITL-TR-13-2.pdf.

50. Ebeling, R. M., B. C. White, and M. T. Fong. 2018. Analysis of a River Bank, Levee, or Floodplain I-Wall Embedded in Stratified Soil Layers During Flood Events Using Corps I-Wall (CI-Wall) Version 2.0. ERDC/ITL TR-18-2. Information Technology Laboratory. U.S. Army Engineer Research and Development Center, Vicksburg, MS. https://hdl.handle.net/11681/31502.

51. Ebeling, R. M., J. F. Peters, and R. E. Wahl. 1991(a). Prediction of Reinforced Sand Wall Performance. Proceedings of the International Symposium on Geosynthetic Reinforced Soil Retaining Walls, Balkema, Rotterdam.

52. Ebeling, R. M., J. F., Peters, and R. E. Wahl. 1991(b). Lessons Learned From Deformation Analysis of Wall Experiment. Proceedings of the International Symposium on Geosynthetic Reinforced Soil Retaining Walls, Balkema, Rotterdam.

53. Ebeling, R. M., M. Azene, and R. W. Strom. 2002. Simplified Procedures for the Design of Tall, Flexible Anchored Tieback Walls. ERDC/ITL-TR-02-9. Information Technology Laboratory. U.S. Army Engineer Research and Development Center, Vicksburg, MS. https://hdl.handle.net/11681/10952.

54. Ebeling, R. M., M. E. Pace, and E. E. Morrison, Jr. 1997. REMR-CS-54. Evaluating the Stability of Existing Massive Concrete Gravity Structures Founded on Rock. Technical Report Department of the Army Waterways Experiment Station, Vicksburg, MS. https://hdl.handle.net/11681/4455.

55. Ebeling, R. M., R. C. Patev, R. L. Mosher. 1996. Case Histories of Earth Pressure-Induced Cracking of Locks. Technical Report ITL-TR-96-9. Information Technology Laboratory. U.S. Army Engineer Research and Development Center, Vicksburg, MS. https://hdl.handle.net/11681/10832.

56. Ebeling, R. M., R. L. Mosher, K. Abraham, J. F. Peters. 1993. Soil-Structure Interaction Study of Red River Lock and Dam No. 1 Subject to Sediment Loading. Technical Report ITL-93-3. Information Technology Laboratory. U.S. Army Engineer Research and Development Center, Vicksburg, MS. https://apps.dtic.mil/dtic/tr/fulltext/u2/a270213.pdf.

57. Ebeling, R. M. 1990. Review of Finite Element Procedures for Earth Retaining Structures. Miscellaneous Paper ITL-90-5. https://apps.dtic.mil/dtic/tr/fulltext/u2/a232230.pdf.

58. Euro-International Committee for Concrete. 1993. CEB-FIP Model Code 1990. T. Telford, London.

59. Fell, R., M.A. Foster, J. Cyganiewicz, G.L. Sills, N.D. Vroman, and R.R. Davidson. 2008. Risk Analysis for Dam Safety: A Unified Method for Estimating Probabilities of Failure of Embankment Dams by Internal Erosion and Piping, URS Australia, Sydney, Australia. http://docshare01.docshare.tips/files/9972/99723266.pdf.

60. Fellenius, B. H. 2004. Unified Design of Piled Foundations with Emphasis on Settlement Analysis. Honoring George G. Goble "Current Practice and Future Trends in Deep Foundations." Geo-Institute Geo-TRANS Conference, Los Angeles, July 27–30, Edited by J.A. DiMaggio and M.H. Hussein. ASCE Geotechnical Special Publication, GSP125, pp. 253–275. https://www.fellenius.net/papers/258%20Fellenius%20Unified%20Design-Goble%20volume.pdf.

61. Fellenius, B. H. 2019. Basics of Foundation Design–A Textbook. Pile Buck International, Inc., Vero Beach, FL, Electronic Edition, www.Fellenius.net, 464. https://www.fellenius.net/papers/412%20The%20Red%20Book,%20Basics%20of%20Foundation%20Design%202021.pdf.

62. Fernando, C., P. Castilla, and J. Martin. 1984. Fixity of Members Embedded in Concrete. CERL TR M-339. U.S. Army Construction Engineer Research Laboratory, Champaign, IL. https://apps.dtic.mil/dtic/tr/fulltext/u2/a138862.pdf.

63. Fletcher, B. P. and P. E. Saunders. 1988. Dynamic Loading on Sidewall Monoliths of a Spillway Stilling Basin. Technical Report HL-88-10. Department of the Army Waterways Experiment Station, Vicksburg, MS. https://apps.dtic.mil/dtic/tr/fulltext/u2/a194916.pdf.

64. Frost, J. D., J. T. DeJong, and M. Recalde. 2002. Failure Behavior of Granular Continuum Interfaces. Engineering Fracture Mechanics, 69, pp. 2029–2048.

65. Gamez, J. and T. D. Stark. (2014). Fully Softened Shear Strength at Low Stresses for Levee and Embankment Design. Journal of Geotechnical and Geoenvironmental Engineering 40(9): pp. 6. https://ascelibrary.org/doi/10.1061/%28ASCE%29GT.1943-5606.0001151.

66. Geotechnical Control Office. 1982. Guide to Retaining Wall Design, Geoguide 1. Engineering Development Department, Hong Kong. https://www.cedd.gov.hk/filemanager/eng/content_107/eg1_198209.pdf.

67. Goldberg, D. T., W. E. Jaworski, and M. D. Gordon. 1976. Lateral Support and Underpinning: Volume I. Design and Construction. FHWA-RD-75-128. Federal Highway Administration, Washington, DC. https://rosap.ntl.bts.gov/view/dot/14528.

68. Gómez, J. E., G. M. Filz, and R. M. Ebeling. 2000. Development of an Improved Numerical Model for Concrete-to-Soil Interfaces in Soil-Structure Interaction Analyses. Technical Report ITl-99-1, Information Technology Laboratory. U.S. Army Engineer Research and Development Center, Vicksburg, MS. https://apps.dtic.mil/docs/citations/ADA385382.

69. Haehnel, R. B. and S. F. Daly. 2002. Maximum Impact Force of Woody Debris on Floodplain Structures. ERDC/CRREL TR-02-2, U.S. Army Corps of Engineers, Engineer Research and Development Center, Cold Regions Research and Engineering Laboratory, Hanover, NH. https://apps.dtic.mil/dtic/tr/fulltext/u2/a398916.pdf.

70. Harries, K. A. and M. F. Petrou. 2001. Behavior of Precast, Prestressed Concrete Pile to Cast-in-Place Pile Cap Connections. PCI Journal. Vol 46, No. 4: 82–92. https://www.pci.org/PCI/Publications/PCI_Journal/Issues/2001/July-August/Behavior_of_Precast__Prestressed_Concrete_Pile_to_Cast-in-Place_Pile_Cap_Connections.aspx.

71. Hartman, J. P., J. J. Jaeger, J. J. Jobst and D. K. Martin. 1989. User's Guide: Pile Group Analysis (CPGA) Computer Program. Technical Report ITL-89-3. Department of the Army Waterways Experiment Station, Vicksburg, MS. https://apps.dtic.mil/dtic/tr/fulltext/u2/a212544.pdf.

72. Ho, T. Y. K., R. J. Jardine, and N. Anh-Minh. 2011. Large-Displacement Interface Shear Between Steel and Granular Media. Géotechnique. 61(3): 221–234. https://www.icevirtuallibrary.com/doi/abs/10.1680/geot.8.P.086.

73. Houlsby, G. T. 1991. How the Dilatancy of Soils Affects Their Behavior. Proc. of the 10th European Conference. Balkema, Rotterdam: Soil Mechanics and Foundation Engineering, 1189–1202. https://www.researchgate.net/publication/252527991_How_the_dilatancy_of_soils_affects_their_behavior.

74. Hu, J. Z. Wand, F. Makdisi, C. Y. Chang, K. Hokens, and N. Schwanz. 2014. Numerical Studies of I-Shaped Levee Flood Wall at St. Paul, Minnesota Site. Proceedings, Geo-Congress 2014 Technical Papers: Geo-Characterization and Modeling for Sustainability. 3163–3177. https://ascelibrary.org/doi/10.1061/9780784413272.308.

75. Idriss, I. M., and R. W. Boulanger. 2008. Soil Liquefaction During Earthquakes. Monograph MNO-12. p 261. Earthquake Engineering Research Institute, Oakland, CA.

76. Idriss, I. M. and R. W. Boulanger. 2015. 2nd Ishihara Lecture: SPT-and CPT-based Relationships for the Residual Shear Strength of Liquefied Soils. Soil Dynamics and Earthquake Engineering 68: 57–68. https://doi.org/10.1016/J.SOILDYN.2014.09.010.

77. IPET 2007. Performance Evaluation of the New Orleans and Southeast Louisiana Hurricane Protection System Final Report. Interagency Performance Evaluation Task Force, Volume V – The Performance – Levees and Floodwalls. Appendix 6: Soil Structure Interaction Analysis of the Floodwall at 17th Street. https://usace.contentdm.oclc.org/digital/collection/p266001coll1/id/2844/.

78. IPET 2007. Performance Evaluation of the New Orleans and Southeast Louisiana Hurricane Protection System Final Report. Interagency Performance Evaluation Task Force, Volume V – The Performance – Levees and Floodwalls. Appendix 8: Analysis of the London Avenue Canal I-Wall Breaches. https://usace.contentdm.oclc.org/digital/collection/p266001coll1/id/2844/.

79. IPET 2007. Performance Evaluation of the New Orleans and Southeast Louisiana Hurricane Protection System Final Report. Interagency Performance Evaluation Task Force, Volume V – The Performance – Levees and Floodwalls. Appendix 9: Soil Structure Interaction Analysis of the Floodwalls at London Avenue Canal. https://usace.contentdm.oclc.org/digital/collection/p266001coll1/id/2844/.

80. IPET 2007. Performance Evaluation of the New Orleans and Southeast Louisiana Hurricane Protection System Final Report. Interagency Performance Evaluation Task Force, Volume V – The Performance – Levees and Floodwalls. Appendix 10: Analysis of Performance of the Orleans Canal I-Walls. https://usace.contentdm.oclc.org/digital/collection/p266001coll1/id/2844/.

81. IPET 2007. Performance Evaluation of the New Orleans and Southeast Louisiana Hurricane Protection System Final Report. Interagency Performance Evaluation Task Force, Volume V – The Performance – Levees and Floodwalls. Appendix 17: Finite Element Seepage Study – Seepage Analysis for Foundation Breaches. https://usace.contentdm.oclc.org/digital/collection/p266001coll1/id/2844/.

82. IPET 2007. Performance Evaluation of the New Orleans and Southeast Louisiana Hurricane Protection System Final Report. Interagency Performance Evaluation Task Force, Volume V – The Performance – Levees and Floodwalls. Appendix 19: FLAC Numerical Analyses of Floodwalls of New Orleans Flood Protection System. https://usace.contentdm.oclc.org/digital/collection/p266001coll1/id/2844/.

83. Ireland, H. O. 1964. Design of Structures to Resist Earth Pressures. American Society of Civil Engineers Soil Mechanics Lecture Series, Illinois, August.

84. Ishihara, K., and M. Yoshimine. 1992. "Evaluation of Settlements in Sand Deposits Following Liquefaction During Earthquakes." Soils and Foundations. 32(1), 173–188. https://www.jstage.jst.go.jp/article/sandf1972/32/1/32_1_173/_pdf.

85. Itasca Consulting Group, 2016. FLAC Version 8.0. Theory and Background. Minneapolis, MN. https://www.itascacg.com/software/FLAC.

86. Jackson, R. B. 1988. E-99 Sheet Pile Wall Field Load Test Report. Technical Report No. 1. U.S. Army Corps of Engineers. Lower Mississippi Valley Division. Vicksburg, MS. https://biotech.law.lsu.edu/katrina/hpdc/docs/19880600_E-99_Sheet_Pile_Wall_Field_Load_Test_Report.pdf.

87. Jardine, R. J., D. M. Potts, A. B. Fourie, and J. B. Burland. 1986. Studies of the Influence of Non-Linear Stress-Strain Characteristics in Soil-Structure Interaction. Géotechnique 36.3: 377–396. https://www.icevirtuallibrary.com/doi/10.1680/geot.1986.36.3.377.

88. Jardine, R. J., F. C. Chow, R. Overy, and J. Standing. 2005. ICP Design Methods for Driven Piles in Sands and Clays. Publishers Thomas Telford, London, England. https://www.researchgate.net/profile/Richard_Jardine/publication/266276027_ICP_design_methods_for_driven_piles_in_sands_and_clays/links/55103ccb0cf203521969d7ae/ICP-design-methods-for-driven-piles-in-sands-and-clays.pdf.

89. Jardine, R. J., B. M. Lehane, and S. J. Everton, 1993. Friction Coefficients for Piles in Sands and Silts. Proc. Int. Conf. on Offshore Site Investigation and Foundation Behaviour, SUT, London, 661–677. https://link.springer.com/chapter/10.1007/978-94-017-2473-9_31.

90. Johnson, J. B., F. Vahedifard, P. Kokkali, A. F. Tessari, T. Abdoun and R. J. Varuso. 2017. Numerical Simulation of T-Walls Supported by Batter Piles Within a Levee Embankment. The Journal of the Deep Foundations Institute. 11.1:1–12. https://www.researchgate.net/publication/320211949_Numerical_simulation_of_T-walls_supported_by_batter_piles_within_a_levee_embankment.

91. Joyner, W. B., and D. M. Boore. 1981. Peak Horizontal Acceleration and Velocity from Strong-Motion Records Including Records from the 1979 Imperial Valley, California, Earthquake. Bull. Seism. Soc. Am. 71, 2011–2038. https://pubs.geoscienceworld.org/ssa/bssa/article/71/6/2011/102109/Peak-horizontal-acceleration-and-velocity-from.

92. Kavazanjian Jr., E., J. J. Wang, G. R. Martin, A. Shamsabadi, I. Lam, S.E. Dickenson, and C. J. Hung. 2011. LRFD Seismic Analysis and Design of Transportation Geotechnical Features and Structural Foundations. FHWA-NHI-11-032. Federal Highway Administration Washington, DC. https://www.fhwa.dot.gov/engineering/geotech/pubs/nhi11032/nhi11032.pdf.

93. Kavazanjian Jr., E, J. E. Andrade, K. Arumoli, B. F. Atwater, J. T. Christian, R. Green, S. L. Kramer, L. Mejia, J. K. Mitchell, E. Rathje, J. R. Rice, and Y. Wang. 2016. State of the Art and Practice in the Assessment of Earthquake-Induced Soil Liquefaction and Its Consequences. Washington, DC: The National Academies Press. https://www.nap.edu/catalog/23474/state-of-the-art-and-practice-in-the-assessment-of-earthquake-induced-soil-liquefaction-and-its-consequences.

94. Keaveny, J. M., and J. K. Mitchell. 1986. Strength of Fine-Grained Soils Using the Piezocone. In Situ 86, Geotechnical Special Publication 6, 668–685. American Society of Civil Engineers. Reston, VA. https://cedb.asce.org/CEDBsearch/record.jsp?dockey=0048846.

95. Knowles, V. R. 1991. Settlement of Shallow Footings on Sand: Report and User's Guide for Computer Program CSANDSET. Technical Report ITL-91-1. U.S. Army Engineer Waterways Experiment Station, Vicksburg, MS. https://apps.dtic.mil/dtic/tr/fulltext/u2/a238950.pdf.

96. Knowles, V. R. 1992. Applications of the Finite Element Seepage Analysis Corps Program CSEEP (X8202). Technical Report ITL-92-6. U.S. Army Engineer Waterways Experiment Station, Vicksburg, MS. https://erdc-library.erdc.dren.mil/xmlui/handle/11681/10927.

97. Kokkali, P., A. Tessari, T. Abdoun, R. Varuso, J. Johnson, G. Filz, and A. Reeb. 2018. Settlement Induced Bending Moments on Pile-Founded Floodwalls. International Journal of Physical Modelling in Geotechnics 18.1: 2–20. https://www.icevirtuallibrary.com/doi/10.1680/jphmg.16.00019.

98. Krabbenhøft, K. K. 2018. Plastic Design of Embedded Retaining Walls. Proceeding of the Institute of Civil Engineers – Geotechnical Engineering. 172(2): pp. 14. https://www.icevirtuallibrary.com/doi/abs/10.1680/jgeen.17.00151.

99. Krabbenhøft, K., M. R. Karin, A. V. Lyamin, and S. W. Sloan. 2012. Associated Computational Plasticity Schemes for Nonassociated Frictional Materials. International Journal of Numerical Methods in Engineering 90.9: 1089–1117. https://doi.org/10.1002/nme.3358.

100. Kraemer, S. R., and A. D. Smith. 1986. Geocomposite Drains. FHWA-RD-86-171. Federal Highway Administration, McLean, VA.

101. Kramer, S. L., and C. H. Wang. 2015. Empirical Model for Estimation of the Residual Strength of Liquefied Soil. Journal of Geotechnical and Geoenvironmental Engineering 141.9: 15. https://ascelibrary.org/doi/10.1061/%28ASCE%29GT.1943-5606.0001317.

102. Kramer, S. L. 1996. Geotechnical Earthquake Engineering. Upper Saddle River: Prentice Hall.

103. Kulhawy, F. H., and J. M. Duncan. 1972. Stresses and Movements in Oroville Dam. Journal of the Soil Mechanics and Foundations Division, 98(7): 653–665. https://cedb.asce.org/CEDBsearch/record.jsp?dockey=0127663.

104. Kulhawy, F. H., J. M. Duncan, and H. B. Seed. 1969. Finite Element Analysis of Stresses and Movements in Embankments During Construction. Contract Report S-69-8. U.S. Army Corps of Engineers Waterways Experiment Station. https://erdc-library.erdc.dren.mil/xmlui/handle/11681/20520.

105. Kulhawy, F. H. and P. W Mayne. 1990. Manual on Estimating Soil Properties for Foundation Design. EPRI EL-6800. Palo Alto, CA: Electric Power Research Institute.

106. Ladd, C. C. 1991. Stability Evaluation during Staged Construction. Journal of Geotechnical Engineering 117.4: 540–615. https://ascelibrary.org/doi/abs/10.1061/(ASCE)0733-9410(1991)117%3A4(540).

107. Ladd, C.C., R. Foott, K. Ishihara, F. Schlosser, H. G. and Poulos. 1977. Stress-Deformation and Strength Characteristics. Proc. of the 9th International Conference. 1977, 421–494. Balkema, Rotterdam: Soil Mechanics and Foundation Engineering. https://www.researchgate.net/publication/274698866_Stress-deformation_and_strength_characteristics.

108. Leavell, D. A., J. F. Peters, E. V. Edris, and T. L. Holmes. 1989. Development of a Finite-Element-Based Procedure for Sheet Pile Walls. Technical Report GL-89-14. US Army Engineer Waterways Experiment Station, Vicksburg, MS. https://apps.dtic.mil/dtic/tr/fulltext/u2/a214479.pdf.

109. Marchetti, S. 2015. Some 2015 Updates to the TC16 DMT Report 2001. Proc. to 3rd International Conference on the Flat Dilatometer. Rome: DMT 2015, 43–65. https://pdfs.semanticscholar.org/da4e/83442c3d5f79dd8730f6986cd43342c5d33f.pdf?_ga=2.133417741.2025627220.1566400575-374387340.1566400575.

110. Marcuson, W. F., M. E. Hynes, and A. G. Franklin, 1990. Evaluation and Use of Residual Strength in Seismic Safety Analysis of Embankments. Earthquake Spectra 6.3: 529–572. https://earthquakespectra.org/doi/pdf/10.1193/1.1585586.

111. Mayne, P. W., M. R. Coop, S. Springman, A. B. Huang, J. Zornberg. 2009. State-of-the-Art Paper (SOA-1): Geomaterial Behavior and Testing. 2777–2872. Eds. Hamza, M., Shahien, M., El-Mossallamy, Y. Proc. of a conference. 5–9 Oct. 2009. International Society of Soil Mechanics and Geotechnical Engineering, Vol. 4, Alexandria, Egypt. http://geosystems.ce.gatech.edu/Faculty/Mayne/papers/SOA-1_at_17th_ICSMGE_2009_Egypt.pdf.

112. Mayne, P. W. 2001. Stress-Strain-Strength-Flow Parameters from Enhanced In-Situ Tests. Proc. of a conference. 2001. Bali, Indonesia: In Situ Measurements of Soil Properties and Case Histories (In-Situ 2001), 27–47. https://www.researchgate.net/publication/281560604_Stress-strain-strength-flow_parameters_from_enhanced_in_situ_tests_International_conference_on_in_situ_measurement_of_soil_properties_case_histories.

113. Mayne, P. W. and H. G Poulos. 1999. Approximate Displacement Influence Factors for Elastic Shallow Foundations. Journal of Geotechnical and Geoenvironmental Engineering 125.6: 453–460. https://ascelibrary.org/doi/10.1061/%28ASCE%291090-0241%281999%29125%3A6%28453%29.

114. Meyerhof, G. G. 1963. Some Recent Research on the Bearing Capacity of Foundations. Canadian Geotechnical Journal. 1(1): 16–26. https://www.nrcresearchpress.com/doi/10.1139/t63-003.

115. Mosher, R. L. and M. E. Pace. 1982. User's Guide: Computer Program for Bearing Capacity Analysis of Shallow Foundations (CBEAR). Instructional Report K-82-7. U.S. Army Corps Waterways Experiment Station, Vicksburg, MS. https://apps.dtic.mil/sti/pdfs/ADA118487.pdf.

116. Mosher, R. L., T. L. Bevins, and B. D. Neeley. 1991. Structural Evaluation of Eisenhower and Snell Locks, Saint Lawrence Seaway, Massena, New York. ITL-91-4. U.S. Army Engineer Waterway Experiment Station, Vicksburg, MS. https://erdc-library.erdc.dren.mil/xmlui/handle/11681/10845.

117. Mosher, R. L., and V. R. Knowles. 1990. Finite Element Study of Tieback Wall for Bonneville Navigation Lock. ITL-90-4. U.S. Army Engineer Waterway Experiment Station, Vicksburg, MS. https://erdc-library.erdc.dren.mil/xmlui/handle/11681/10897.

118. Moss, R. E. S., R. B. Seed, R. E. Kayen, J. P. Stewart, A. Der Kiureghian, and K. O. Cetin. 2006. CPT-Based Probablistic and Deterministic Assessment of In Situ Seismic Soil Liquefaction Potential. Journal of Geotechnical and Geoenvironmental Engineering 132(8): 1032–1051. https://ascelibrary.org/doi/10.1061/%28ASCE%291090-0241%282006%29132%3A8%281032%29.

119. Muir Wood, D. 2004. Geotechnical Modelling. 488. Spon Press. London. https://doi.org/10.1201/9781315273556.

120. National Cooperative Highway Research Program (NCHRP). 2002. Comprehensive Specification for the Seismic Design of Bridges. NCHRP Report 472, Transportation Research Board, Washington DC. http://onlinepubs.trb.org/onlinepubs/nchrp/nchrp_rpt_472.pdf.

121. Navin, M. P. 2005. Stability of Embankments Founded on Soft Soil Improved with Deep-Mixing-Method Columns. PhD Thesis, Virginia Polytechnic and State University. https://vtechworks.lib.vt.edu/handle/10919/28654.

122. Newmark, N. M. 1942. Influence Charts for Computation of Stresses in Elastic Foundations. 338. University of Illinois Engineering Experiment Station. https://www.ideals.illinois.edu/bitstream/handle/2142/4170/engineeringexperv00000i00338.pdf?sequen.

123. Olsen, R. S., and J. K. Mitchell, 1995. CPT Stress Normalization and Prediction of Soil Classification. Proc. of the International Symposium. 4–5 Oct. 1995. Cone Penetration Testing, CPT '95, Vol. 3, 257–262. Linköping, Sweden. https://apps.dtic.mil/dtic/tr/fulltext/u2/a285193.pdf.

124. Olson, S. M and T. D. Stark. 2002. Liquefied Strength Ratio from Liquefaction Flow Failure Case Histories. Can. Geotech. J 39: 629–47. https://cdnsciencepub.com/doi/10.1139/t02-001.

125. Pace M. E. 1994. User's Guide to CTWALL: A Microcomputer Program for the Analysis of Retaining and Flood Walls. Instructional Report ITL-94-7 U.S. Army Corps of Engineers Waterway Experiment Station, Vicksburg, MS. https://apps.dtic.mil/dtic/tr/fulltext/u2/a290378.pdf.

126. Pace, M. E. and V. R. Noddin. 1987. Sliding Stability of Concrete Structures (CSLIDE). Instruction Report ITL-87-5. Department of the Army Waterways Experiment Station, Vicksburg, MS. https://apps.dtic.mil/dtic/tr/fulltext/u2/a189334.pdf.

127. Pace, M. E., K. Abraham, and R. M. Ebeling. 2012. Complete Soil-Structure Interaction Analyses of I-Walls Embedded in Level Ground During Flood Loading. ERDC/ITL-TR-12-4. Information Technology Laboratory. U.S. Army Engineer Research and Development Center, Vicksburg, MS. https://apps.dtic.mil/dtic/tr/fulltext/u2/a570343.pdf.

128. Pells, S. and R. Fell. 2003. Damage and Cracking of Embankment Dams by Earthquake and the Implications for Internal Erosion and Piping. Proceedings 21st Internal Congress on Large Dams, Montreal. ICOLD, Paris Q83-R17, International Commission on Large Dams, Paris. http://www.pellsconsulting.com.au/downloads/Pells_Fell_2003.pdf.

129. Post-Tensioning Institute. 2014. Recommendations for Prestressed Rock and Soil Anchors. PTI DC35.1-14. Farmington Hills, MI.

130. Potts, D. M. 2003. Numerical Analysis: A Virtual Dream or Practical Reality? Géotechnique 53.6: 535–573. https://www.icevirtuallibrary.com/doi/10.1680/geot.2003.53.6.535.

131. Potts, D. M. and L. Zdravković, 2001a. Finite Element Analysis in Geotechnical Engineering: Theory. 440. Thomas Telford, London. https://www.icevirtuallibrary.com/isbn/9780727739612.

132. Potts, D. M. and L. Zdravković, 2001b. Finite Element Analysis in Geotechnical Engineering: Application. 427. Thomas Telford, London. https://www.icevirtuallibrary.com/doi/abs/10.1680/feaigea.27831.

133. Potyondy, J. G. 1961. Skin Friction Between Various Soils and Construction Materials. Géotechnique, 11(4): 339–353. https://www.icevirtuallibrary.com/doi/abs/10.1680/geot.1961.11.4.339.

134. Poulos, H. G., and E. H. Davis. 1974. Elastic Solutions for Soil and Rock Mechanics. 410. John Wiley and Sons, New York. http://research.engr.oregonstate.edu/usucger/PandD/PandD.htm.

135. Powrie, W. 2004. Soil Mechanics: Concepts and Applications. 2nd ed. Taylor and Francis Group, London. https://www.researchgate.net/publication/313156738_Soil_mechanics_concepts_and_applications_2nd_edition.

136. Powrie, W. 2012. Earth Pressure Theory. ICE Manual of Geotechnical Engineering. Institute of Civil Engineering: 211–226. https://www.icevirtuallibrary.com/doi/full/10.1680/moge.57074.0221.

137. Quinteros, V. S., R. Ryvik, and N. Mortensen. 2017. Interface Friction Angle Soil-on-Steel from Ring Shear Tests on Offshore North Sea Sands. Geotechnical Frontiers 2017 GSP 280, American Society of Civil Engineers, Reston, VA: 358–367. https://ascelibrary.org/doi/10.1061/9780784480472.038.

138. Reeb, A. 2015. Response of Pile-Supported T-Walls to Fill Loading and Flood Loading Based on Physical Model Studies and Numerical Analyses. Doctoral Dissertation. Virginia Tech. U., Blacksburg, VA. https://vtechworks.lib.vt.edu/handle/10919/64498.

139. Reese, L. C., E. R. Cox, and F. D. Koop. 1974. Analysis of Laterally Loaded Piles in Sand. Proc. of the 6th Offshore Technology Conference. 1974, 473–484. Houston, TX.

140. Robertson, P. K. 2016. Cone Penetration Test (CPT)-Based Soil Behavior Type (SBT) Classification System – An Update. Canadian Geotechnical Journal 53.12: 1910–1927. https://www.nrcresearchpress.com/doi/full/10.1139/cgj-2016-0044.

141. Robertson, P. K., and K. L. Cabel. 2015. Guide to Cone Penetration Testing for Geotechnical Engineering. 6th ed. Greg Drilling & Testing, Inc., Signal Hill, CA. https://www.greggdrilling.com/news/6th-edition-of-guide-to-cone-penetration-testing-now-available/.

142. Robertson, P. K., R. G. Campanella, D. Gillespie, and J. Greig. 1986. Use of Piezometer Cone Data. Ed. Clemence, S.P. Proc. of a specialty conference. 23–25 Jun. 1986. ASCE Geotechnical Special Publication No. 6, 1263–1280. American Society of Civil Engineers. New York.

143. Romanoff, M. 1962. Corrosion of Piles in Soil. United States Bureau of Standards Monograph No. 58. https://nvlpubs.nist.gov/nistpubs/Legacy/MONO/nbsmonograph58.pdf.

144. Rowe, P. W. 1952. Anchored Sheet-Pile Walls. Proceedings, Institution of Civil Engineers, London, Part I, Vol 1, No. 5788, January, pp 27–70. https://www.icevirtuallibrary.com/doi/pdf/10.1680/iicep.1952.10942.

145. Rowe, P. W. 1955a. A Theoretical and Experimental Analysis of Sheet-Pile Walls. Proceedings, Institution of Civil Engineers, London, Part I, Vol 4, No. 5989, January, pp 32–69.

146. Rowe, P. W. 1955b. Sheet-Pile Walls Encastre at the Anchorage. Proceedings, Institution of Civil Engineers, London, Part I, Vol 4, No. 5990, January, pp 70–87.

147. Rowe, P. W. 1956. Sheet-Pile Walls at Failure. Proceedings, Institution of Civil Engineers, London, Part I, Vol 5, No. 6107, May, pp 276–315. https://www.icevirtuallibrary.com/doi/abs/10.1680/iicep.1956.11482.

148. Rowe, P. W. 1957a. Sheet-Pile Walls in Clay. Proceedings, Institution of Civil Engineers, London, Vol 7, No. 6201, July, pp 629–654. https://www.icevirtuallibrary.com/doi/abs/10.1680/iicep.1957.2613.

149. Rowe, P. W. 1957b. Sheet-Pile Walls Subject to Line Resistance Above the Anchorage. Proceedings, Institution of Civil Engineers, London, Vol 6, No. 6233, June, pp 629–654.

150. Ruggeri, G. 2004. Sliding Safety of Existing Gravity Dams. Final report of ICOLD working group. http://www.britishdams.org/2004conf/reports/sliding.pdf.

151. Sabatini, P. J., D. G. Pass, and R. C. Bachus. 1999. Ground Anchors and Anchored Systems. FHWA-IF-99-015. Federal Highway Administration, Washington, DC. https://www.fhwa.dot.gov/engineering/geotech/pubs/if99015.pdf.

152. Sabatini, P. J, R. C. Bachus, P. W. Mayne, J. A. Schneider, and T. E. Zettler. 2002. Evaluation of Soil and Rock Properties. FHWA-IF-02-034. Federal Highway Administration., Washington, DC. https://www.fhwa.dot.gov/engineering/geotech/pubs/010549.pdf.

153. Schanz, T., P. A. Vermeer, and P. G. Bonnier. 1999. The Hardening-Soil Model: Formulation and Verification. Beyond 2000 in Computational Geotechnics. 281–290. Ed. Brinkgreve, R.B.J. Balkema, Rotterdam. https://www.plaxis.com/support/publications/the-hardening-soil-model-formulation-and-verification/.

154. Schmertmann, J. H. 1978. Guidelines for Cone Penetration Test Performance and Design. FHWA-TS-78-209. Federal Highway Administration. McLean, VA. https://trid.trb.org/view/142383.

155. Schwab, G., et al. 1981. Soil and Water Conservation Engineering. John Wiley Inc., New York.

156. Seed, R. B. and L. F. Harder. 1990. SPT-Based Analysis of Cyclic Pore Pressure Generation and Undrained Residual Strength. Ed. Duncan, J.M. Proc. of the H.B. Seed Memorial Symposium, Vol. 2, 351–376. BiTech Publishers, Richmond, VA. https://www.tib.eu/en/search/id/BLCP%3ACN022720748/SPT-Based-Analysis-of-Cyclic-Pore-Pressure-Generation/.

157. Shibata T., H. Sekiguchi, and H. Yukimoto. 1982. Model Tests and Analysis of Negative Skin Friction Acting on Piles. Japanese Geotechnical Society, Soils and Foundations 22.2: 29. https://doi.org/10.3208/sandf1972.22.2_29.

158. Sibley, E. A. 1967. Backfill Adjacent to Structures. Proc. of the Montana Conference on Soil Mechanics and Foundation Engineering. 1967. Department of Civil Engineering, Montana State University. Boseman, M.

159. Simpson, B., N. O'Riordan, and D. D. Croft. 1979. A Computer Model for the Analysis of Ground Movements in London Clay. Géotechnique 29.2: 149–175. https://www.icevirtuallibrary.com/doi/10.1680/geot.1979.29.2.149.

160. Sloan, S. W. 2013. Geotechnical Stability Analysis. Géotechnique 63.7: 531–572. https://www.icevirtuallibrary.com/doi/10.1680/geot.12.RL.001.

161. Smith, A. D., and S. R. Kraemer. 1987. Creep of Geocomposite Drains. Proc. of Geosynthetic Conference. Feb 1987. New Orleans, LA., 422–433. U.S. Army Engineer Waterways Experiment Station, Vicksburg MS.

162. Sokolovskii, V. 1960. Statics of Soil Media. Butterworths Scientific. London. https://openlibrary.org/books/OL5812779M/Statics_of_soil_media.

163. Sowers, G. B., and G. F. Sowers. 1951. Introductory Soil Mechanics and Foundations. The MacMillan Group, New York. https://books.google.com/books/about/Introductory_Soil_Mechanics_and_Foundati.html?id=nZ0FAAAAMAAJ.

164. Spencer, E. 1967. A Method of Analysis of the Stability of Embankments Assuming Parallel Inter-Slice Forces. Géotechnique 17.1: 11–26. https://www.icevirtuallibrary.com/doi/10.1680/geot.1967.17.1.11.

165. Stark, T. D., N. H. Jafari, A. L. Leopold, and T. L. Brandon. 2014. Soil Compressibility in Transient Unsaturated Seepage Analyses. Canadian Geotechnical Journal. 51(8): 858–868. https://www.nrcresearchpress.com/doi/full/10.1139/cgj-2013-0255.

166. Strom, R. W. and R. M. Ebeling. 2001. State of the Practice in the Design of Tall, Stiff, and Flexible Tieback Retaining Walls. ERDC/ITL-TR-01-1. Information Technology Laboratory. U.S. Army Engineer Research and Development Center, Vicksburg, MS. https://apps.dtic.mil/dtic/tr/fulltext/u2/a405009.pdf.

167. Strom, R. W. and R. M. Ebeling. 2002a. Simplified Procedures for the Design of Tall, Stiff Tieback Walls. ERDC/ITL-TR-02-10. Information Technology Laboratory. U.S. Army Engineer Research and Development Center, Vicksburg, MS. https://hdl.handle.net/11681/10957.

168. Strom, R.W. and R. M. Ebeling. 2002b. Methods Used in Tieback Wall Design and Construction to Prevent Local Anchor Failure, Progressive Anchorage Failure, and Ground Mass Stability Failure. ERDC/ITL-TR-02-11. Information Technology Laboratory. U.S. Army Engineer Research and Development Center, Vicksburg, MS. https://hdl.handle.net/11681/10958.

169. Subba Rao, K. S., Allam, M. M., Robinson, R. G. 1998. Interfacial Friction Between Sands and Solid Surfaces. ICE Geotechnical Engineering, 131(2): 75–82. https://www.icevirtuallibrary.com/doi/abs/10.1680/igeng.1998.30112.

170. Takahashi, K. 1985. Bending of a Batter Pile Due to Ground Settlement. Japanese Geotechnical Society, Soils and Foundations 25.4: 75–91. https://doi.org/10.3208/sandf1972.25.4_75.

171. Tcheng, Y. and J. Iseux. 1972. Essais de Butee en Vraie Grandeur et Constraintes Engendrees par une Surcharge Rectangulaire sur un Mur Vertical. Proc. of 5th European Conference. Madrid: Soil Mechanics and Foundation Engineering.

172. Teng, W. C. 1962. Foundation Design. Prentice Hall, Englewood Cliffs, NJ.

173. Terzaghi, K. 1943. Theoretical Soil Mechanics. John Wiley and Sons. New York. https://archive.org/details/in.ernet.dli.2015.5818/page/n5.

174. Terzaghi, K. 1954. Anchored Bulkheads. Transactions, American Society of Civil Engineers, Vol 119.

175. Terzaghi, K. and R. Peck. 1967. Soil Mechanics in Engineering Practice. 2nd ed. John Wiley. New York. https://catalog.hathitrust.org/Record/001514182.

176. Tokimatsu, K. and H. B. Seed. 1987. Evaluation of Settlements in Sands Due to Earthquake Shaking. Journal of Geotechnical Engineering. 113.8:861–878. https://ascelibrary.org/doi/abs/10.1061/(ASCE)0733-9410(1987)113:8(861).

177. Torrey, V. H., J. B. Dunbar, and R. W. Peterson. 1988. Retrogressive Failures in Sand Deposits of the Mississippi River. Technical Report ITL-TR-GL-88-9. US Army Engineer Waterway Experiment Station, Vicksburg, MS. https://hdl.handle.net/11681/13068.

178. Tracy, F. T.; T. L. Brandon, M. K. Corcoran. 2016. Transient Seepage Analyses in Levee Engineering Practice. ERDC TR-16-8. U.S. Army Engineer Research and Development Center, Vicksburg, MS. https://pdfs.semanticscholar.org/fb40/c477cd41b8077c50dbcb129d587b51e22c3d.pdf.

179. Uesugi, M., and H. Kishida. 1986a. Influential Factors of Friction Between Steel and Dry Sand. Soils and Foundations. 26(2): 33–46. https://www.jstage.jst.go.jp/article/sandf1972/26/2/26_2_33/_article.

180. Uesugi, M., and Kishida, H. 1986b. Frictional Resistance at Yield Between Dry Sand and Mild Steel. Soils and Foundations. 26(4): 139–149. https://www.jstage.jst.go.jp/article/sandf1972/26/4/26_4_139/_article.

181. Vesic, A. S. 1975. Bearing Capacity of Shallow Foundations. Foundation Engineering Handbook. Ed. Winterkornn, H. F. and H-Y Fang. 121–147. Van Nostrand Reinhold Company Inc., New York.

182. Weatherby, D. E. 1998. Design Manual for Permanent Ground Anchor Walls. FHWA-RD-97-130. Federal Highway Administration, Washington, DC. https://catalog.hathitrust.org/Record/101655329.

183. Weber, J. P., R. B. Seed, J. M. Pestana, R. E. S. Moss, C. Nweke, T. T. Deger, and K. Chowdury. 2015. Engineering Evaluation of Post-Liquefaction Strength. Prepared for U.S. Nuclear Regulatory Commission. Department of Civil and Environmental Engineering University of California at Berkeley. https://www.nrc.gov/docs/ML1635/ML16354A368.pdf.

184. Westergaard, H. M. 1933. Water Pressures on Dams During Earthquakes. American Society of Civil Engineers, 98, 418–433. ASCE Publication Fulfillment, 345 East 4th St., New York, NY.

185. Whitman, R. 1990. Seismic Design and Behavior of Gravity Retaining Walls. Proceedings of the ASCE Speciality Conference on Design and Performance of Earth Retaining Structures, Geotechnical Special Publication 25, 817–842.

186. Wood, D. M. 1990. Soil Behavior and Critical State Soil Mechanics. p 462. Cambridge University Press, Cambridge, MA. https://doi.org/10.1017/CBO9781139878272.

187. Wu, J. and R.B. Seed. 2004. Estimation of Liquefaction-Induced Ground Settlement (Case Studies). International Conference on Case Histories in Geotechnical Engineering 6. Paper No. 3.09. https://scholarsmine.mst.edu/icchge/5icchge/session03/6.

188. Yu, H. S., R. Salgado, S. W. Sloan, and J. M. Kim. 1998. Limit Analysis versus Limit Equilibrium for Slope Stability. Journal of Geotechnical and Geoenvironmental Engineering 124.1: 1–11. https://ascelibrary.org/doi/abs/10.1061/%28ASCE%291090-0241%281998%29124%3A1%281%29.

189. Yuan, Y., and A. J. Whittle. Evaluation and Prediction of 17th Street Canal I-Wall Stability Using Numerical Limit Analyses. Journal of Geotechnical and Geoenvironmental Engineering 139.6: 841–852. https://ascelibrary.org/doi/10.1061/%28ASCE%29GT.1943-5606.0000814.

190. Youd, T. L., C. M. Hansen, and S. F. Bartlett. 2002. Revised Multilinear Regression Equations for Prediction of Lateral Spread Displacement. Journal of Geotechnical and Geoenvironmental Engineering 128.12: 1007-1017. https://ascelibrary.org/doi/10.1061/%28ASCE%291090-0241%282002%29128%3A12%281007%29.

191. Youd, T. L., I. M. Idriss, R. D. Andrus, I. Arango, G. Castro, J. T. Christian, R. Dobry, W. D. Liam Finn, L. F. Harder Jr., M. E. Hynes, K. Ishihara, J. P. Koester, S.S.C. Liao, W. F. Marcuson III, G. R. Martin, J. K. Mitchell, Y. Moriwaki, M. S. Power, P. K. Robertson, R. B. Seed, and K. H. Stokoe II. 2001. Liquefaction Resistance of Soils: Summary Report from the 1996 NCEER and 1998 NCEER/NSF Workshops on Evaluation of Liquefaction Resistance of Soils. Journal of Geotechnical and Geoenvironmental Engineering 127.10: 817–833. https://ascelibrary.org/doi/10.1061/%28ASCE%291090-0241%282001%29127%3A10%28817%29.

192. Zdravković, L. and D. M. Potts. 2010. Application of Numerical Analysis in Geotechnical Engineering Practice. GeoFlorida 2010: Advances in Analysis, Modeling & Design, 69–88. American Society of Civil Engineers. Reston, VA. https://ascelibrary.org/doi/10.1061/41095%28365%294.

193. Zhang, D. M., K. K. Phoon, H. W. Huang, and Q. F. Hu. 2015. Characterization of Model Uncertainty for Cantilever Deflections in Undrained Clay. Journal of Geotechnical and Geoenvironmental Engineering 141.1: 14. https://ascelibrary.org/doi/10.1061/%28ASCE%29GT.1943-5606.0001205.

194. Zhang, G. and J. M. Zhang. 2006. Monotonic and Cyclic Tests of Interface Between Structure and Gravelly Soil. Soils and Foundations. 46(4): 505–518. https://www.jstage.jst.go.jp/article/sandf/46/4/46_4_505/_article.

195. Zhang, G., P. K. Robertson, and R. W. I. Brachman. 2004. Estimating Liquefaction-Induced Lateral Displacements Using the Standard Penetration Test or Cone Penetration Test. Journal of Geotechnical and Geoenvironmental Engineering 130.8: 861–871. https://ascelibrary.org/doi/10.1061/%28ASCE%291090-0241%282004%29130%3A8%28861%29.

Table A.1
Unit Conversion Factors

Multiply	By	To Obtain
cubic feet	0.02831685	cubic meters
cubic inches	1.63871E-05	cubic meters
degrees (angle)	0.01745329	radians
feet	0.3048	meters
inches	0.0254	meters
pounds (force)	4.448222	newtons
pounds (force) per square foot	47.88026	pascals
pounds (force) per square inch	6.894757	kilopascals
square feet	0.09290304	square meters
square inches	6.4516E-04	square meters
square miles	2.59E+06	square meters
cubic meters	35.31466	cubic feet
cubic meters	61023.7	cubic inches
radians	57.295788	degrees (angle)
meters	3.2808	feet
meters	39.37	inches
newtons	0.224809	pounds (force)
pascals	0.020885	pounds (force) per square foot
kilopascals	0.145038	pounds (force) per square inch
square meters	10.763910	square feet
square meters	1550.0	square inches
square meters	3.86E-07	square miles

Appendix B
Polyvinyl Chloride (PVC) Sheet Pile

B.1. Introduction. This Appendix provides guidance for the use of PVC sheet pile. PVC sheet pile is designed according to the main portion of this engineer manual, except as specified herein.

B.1.1. General Applications of PVC Sheet Pile.

B.1.1.1. Based on the intended use, applications for PVC sheet pile can be classified under three major areas:

B.1.1.1.1. Ground water containment and seepage cutoff barriers.

B.1.1.1.2. Soil retaining structures.

B.1.1.1.3. Water control and flood risk management.

B.1.1.2. In all cases, the designer must consider the foundation conditions and drivability to ensure that the sheets can be installed to required depths without voids remaining around the pile and that interlocks remain intact during installation. Interlock integrity is particularly important for structures with differential head across the sheet pile.

B.1.2. Hydraulic Cutoff Barriers (Ground Water or Seepage).

B.1.2.1. In hydraulic cutoff barriers, the focus is usually on the control of lateral migration of ground water or contaminants. The sheet piles are driven into the ground to provide a cutoff wall with the interlocks designed to achieve an effective seal.

B.1.2.2. For seepage cutoff integral to concrete structures, differential movement of the structure and foundation must be carefully considered in the design and selection of the structural system. This condition can result in transfer of structural loads to the PVC sheet pile and/or pullout of the sheet pile from the concrete footing. In addition, other conditions that would cause structure loads across the sheet pile, such as from scour or unbalanced loading, need to be considered. PVC sheet pile for these purposes may be used when the differential movement of the structure and foundation are shown to be small enough to minimize load transfer to the sheet pile or the potential structural loads can be quantified and included in the design.

B.1.2.3. For critical structures, PVC sheet pile should only be considered when relative movements of the soil and structure are expected to be very small and the structural loading on the sheet pile is extremely unlikely. Note that differential head across sheet pile results in a structural load. See Chapter 2 for limitations on the use of PVC sheet pile for critical structures.

B.1.3. Retaining Structures. When installed as a hydraulic retaining wall, design is performed according to Chapters 9, 10, and 11, with additional guidance contained in this Appendix.

B.1.4. Water Control Structures.

B.1.4.1. Potential water control structures covers a wide range of applications. Some common applications include: channel linings and spillways, weir walls, baffle walls and diversion structures, pond linings, levee extensions, and floodwalls (including cantilever sheet pile floodwalls (I-walls)). Installations in this category can experience some or all of the following hazards, which can often be large and unpredictable: intense hurricanes and storms, rapid swelling and overtopping, large wave forces, barge or vessel impact, large debris and ice impact, substantial ground movement, rapid erosion, rapid soil-structure interaction changes, and unpredictable hydrodynamic forces.

B.1.4.2. The design must consider the uncertainty in hydraulic, environmental, and geotechnical site conditions and the resilience of the final system to these conditions when designing water control structures. The final completed system must be able to function reliably over the service life and not intolerably increase risk. The cantilever height for a PVC sheet pile I-wall must be limited by calculated/estimated deflections according to the limitations in Chapter 9. See Chapter 2 for limitations on the use of PVC in critical structures.

B.2. Material Properties and Classification.

B.2.1. For Manufacture. PVC sheet piles are typically manufactured by a continuous extrusion process. Rather than using virgin PVC throughout the panel thickness, which is very expensive to do correctly, manufacturers of PVC sheet piles commonly use post-industrial recycled PVC as the substrate during the co-extrusion process. Typically, the recycled-PVC substrate forms approximately 90 percent of the volume. The exterior portion, which is called "capstock," uses UV-protected, higher quality virgin PVC to achieve resistance against weather and UV degradation. Requirements for PVC sheet pile are provided by ASTM D8427-21.

B.2.2. PVC Classification and Mechanical Properties. The mechanical properties and long-term performance of the PVC sheet pile are dependent on its chemical compounding. Although such compounding and fabrication are critical to the performance of the PVC sheet pile wall, the industry has yet to develop manufacturing standards. Virgin PVC used in sheet pile must have a minimum cell classification of 1-42443-33 according to ASTM D4216. The other numbers correspond to the values shown in Table B.1, in the order they are listed in the cell classification. There is no ASTM classification for the substrate. The full composite product of the substrate and cap must meet mechanical property requirements 2 through 8 of Table B.1.

Table B.1
PVC Sheet Pile ASTM D4216 Cell Classification Requirements

Designation Order #	Properties	Cell Classification	Values
1	Type of Resin	1	poly(vinyl chloride)(PVC)
	Impact resistance		
2	(1) Izod Notch Testing	4	>5 ft-lb/in
3	(2) Drop dart ASTM 4226 Procedure A	2	>1.5 in-lb/mil
4	(3) Drop dart ASTM 4226 Procedure B	4	>3 in-lb/mil
5	Tensile strength	4	>6,500 psi
6	Modulus of elasticity*	3	>377,000 psi
7	Deflection temperature under [264 psi]	3	>158°F
8	Coefficient of linear expansion	3	<4.4×10-5

B.2.3. Certificate of Analysis and Warranty. Exterior portions of the PVC sheet pile, which could become exposed to the elements, must be manufactured with a virgin compound. ASTM D4216 must be used to ensure proper formulation and quality. PVC sheet pile must have a certificate of analysis from an ISO 9001:2015 certified compounder indicating the minimum cell classification for the virgin PVC is 1-42443-33. A minimum 50-year manufacturer/OEM warranty for the final product must be required in the project specifications.

B.2.4. UV Protection. When fabricating plastic products for exterior use, it is imperative that the material be protected from UV rays. Manufacturers of PVC compounds that have not been certified as meeting the recommended cell classification are required to demonstrate minimal color, physical property, and appearance change by performing tests according to the ASTM D4216 specification. ASTM D4216 requires testing of new compounds for at least two years in at least three widely different climatic areas: (1) a dry hot climate (such as Phoenix, AZ); (2) a hot and humid climate (such as Miami, FL); and (3) a temperate northern climate (such as Northern Ohio or New Jersey). The virgin capstock thickness meeting the cell classification in paragraph B.2.2 must be specified to be no less than 0.015 in. (0.38 mm) at any point, unless special testing is performed.

B.3. Structural Design.

B.3.1. Bending Strength. PVC has low strength and a low modulus of elasticity relative to steel and it is also subject to creep deformation. PVC sheet pile must be designed with an allowable bending stress of 3,200 psi (22.1 MPa) (half of the tensile strength of 6,500 psi (44.8 MPa)) for design loads. The allowable stress of 3,200 psi (22.1 MPa) ensures that the induced stresses will remain well below the creep deformation limit for the life of the structure. Note that small increases in design stress can exponentially shorten the functional life of the

sheet pile. This limit on maximum allowable stress applies regardless of the loading category (usual, unusual, or extreme).

B.3.2. Deflection.

B.3.2.1. Because of the low modulus of elasticity, practical deflection limits may be exceeded well before design stress limitations are reached in the PVC sheet. Because of this, cantilevered PVC sheet pile wall designs are controlled, for the most part, by deflection rather than stress. In general, it is more economical to design PVC sheet pile walls as an anchored wall system. Where anchored wall systems are not possible or practical, the engineer should also give consideration to other methods of bracing the wall, such as batter piles and/or combination walls, made with round timber pile or other round pile materials.

B.3.2.2. Designers must design for deflection limits appropriate for the installation. The interaction between soil and the sheet pile plays an important role in determining the final deflection. This interaction has been well-defined for steel, but full scale field testing with PVC is still lacking.

B.3.2.3. When deflections are not critical and the stability factors of safety are high (greater than or equal to 1.5), deflections can be estimated with simple limit equilibrium analyses. CWALSHT or CI-Wall can be used in this case. When deflections are critical and/or the stability factors of safety are low (less than 1.5), deflections must be computed by soil-structure interaction analysis. Deflections for cantilever floodwalls must meet the minimum requirements of Table 9.3.

B.3.3. Impact Forces. PVC sheet pile has low impact resistance compared to steel and its impact resistance decreases with time. Therefore, PVC sheet pile must not be used when impacts (large debris, vessel, or ice) are likely during the design life. In some situations, it may be practical to provide features to protect the sheet pile from impact.

B.3.4. Corners and Intersections. Because PVC sheet pile is subject to large deflections under loading, lateral forces developed by the restraint at sharp corners or at small radius bends can cause a tension failure of the interlocks. Therefore, alignment changes must be made with large radius bends. Greater design deflections will require increased radius of bends. Sharp bends or corners must be avoided unless deflections are limited or controlled.

B.4. Installation.

B.4.1. Typically, PVC sheet piles can be installed with the same or similar pile driving equipment that is used to drive steel sheet piling. However, given the material differences between PVC, steel sheet piling, and the wide variety of site conditions, some specialized equipment and techniques may be necessary to achieve effective results. The best choices in equipment for installation of PVC sheet piling depend on several key factors, including: site and soil conditions, sheet length, and type and contractor experience. In dense soils or soils with obstructions, special driving measures may be required.

B.4.2. Driving. In general, vibratory hammers work best in granular soils, but they also work well in sandy, silty, or softer clay soils. Harder driving conditions, such as stiff or highly cohesive clays, may require a gravity drop, excavator-mounted vibratory, or a fixed lead mounted vibratory hammer where some combination of light impact and pressing can be incorporated. Due to the greater likelihood of interlock damage that may result, PVC sheet piling used for I-wall applications must not be installed using impact hammers.

B.4.3. Mandrels.

B.4.3.1. Mandrels are a type of installation equipment that provides support to PVC sheet piling in difficult driving conditions, or where long and slender sheets are desired. In essence, a mandrel is a cradle, running the full length of the PVC sheet piling that is driven with the pile and then extracted after each driving operation, leaving the PVC piling in the soil.

B.4.3.2. Extraction of the mandrel results in a void between in situ soil and the sheet pile that may close as soil collapses against the pile. Voids or loose zones are more likely to remain in certain types of soils and with the use of imprecise construction equipment. These voids must be backfilled with suitable material as stated in B.4.4.4.

B.4.3.3. PVC sheet piling used for I-wall applications must not be installed using mandrels, because of the formation of gaps and the possibility of voids/gaps around the surfaces of the sheet piling.

B.4.4. Other Driving Methods. Depending on the conditions, the following methods can be used to aid in driving or as backup when driving is too difficult.

B.4.4.1. Steel spuds and similar devices can be driven along the installation line prior to, and as a separate operation from, driving the sheet pile, which can break up obstructions. This method must not be used for I-wall applications.

B.4.4.2. Water jetting is the direct injection of water, commonly at high pressure and volume, at the toe of the sheet piling with the purpose of displacing and saturating soil to encourage penetration of the sheet pile or removal of obstruction. Regulation is difficult, and because of the possible impact to adjacent soil or structures, jetting must not be permitted in dams and levees (see Chapter 13).

B.4.4.3. Auger drilling is a method that usually involves a helical screw blade that displaces and loosens soil in the driving line. This method must not be used for I-wall applications.

B.4.4.4. A trench and fill operation is used to excavate the soil (to aid in driving) or to eliminate it all together. Small “starter trenches” are often used to get below compacted fill near the surface and “toe-in” the sheets. In some cases, maximum installation efficiency is achieved by completely trenching to the desired embedment depth. Backfilling must be performed with soil, bentonite slurry, grout, or flowable fill, depending on the depth of the trench and project

specifications and requirements. Due to difficulties in getting proper compaction in and around the flanges and angled webs of the sheet piling, compacted backfill must not be used.

B.5. Specification and Procurement Considerations. A USACE guide specification for PVC sheet pile does not exist at this time. The following are considerations and suggestions for inclusion into a project specification for PVC sheet pile.

B.5.1. Pulling and Redriving PVC Piles.

B.5.1.1. Occasionally, piles are required to be pulled out of the ground. A plan for pulling sheets should be developed in advance of starting the project by the contractor as the plan will be dependent on the length of the piles and the equipment available. Redriving of PVC piles is generally discouraged but may be possible if the piles are not damaged from the pulling process. The Engineer of Record for the project must establish criteria for the evaluation of the pulled piles.

B.5.1.2. When used for seepage cutoff, piles must maintain mechanical interlock throughout their alignment. When out-of-interlock piles cannot be pulled to reestablish interlocks, repair methods, such as overlapping of piles and/or grout columns, must be designed to provide an equivalent barrier.

B.5.2. Void Backfill. If a void is left, the void must be filled in appropriately. The functional requirements of the PVC wall and the soil conditions will determine if the backfill method should be bentonite slurry, grout, flowable fill, or earthen material.

B.5.3. Submittals by the Contractor. The following paragraphs are necessary submittals from the contractor prior to construction.

B.5.3.1. Shop Drawings. The contractor will be required to provide cut sheets or manufacturer developed specification sheets for materials supplied as a part of a construction project under the shop drawing submittal process. The contractor will also be required to submit the qualifications of the manufacturer and submit a record of previous projects where the product has been used successfully.

B.5.3.2. Equipment Descriptions and Installer Qualifications.

B.5.3.2.1. Prior to the start of work, the contractor must be required to submit for approval a written statement addressing the appropriate installation equipment, tools, and driving method as dictated by the soil conditions, including driving aids. Typical driving aids might be the use of a mandrel, an auger, a pre-punch tool, such as an I-beam, or even a heavy-duty steel sheet pile driven ahead of a light duty pile to clear the way for the lighter pile section.

B.5.3.2.2. Minimum qualifications for the contractor and the supplier of the mandrel must be required. The contractor must be required to have experience with driving procedures for installing PVC sheets in similar soil conditions. In addition, the installer should be required to

coordinate with the PVC sheet pile manufacturer on the manufacturer's suggestions regarding equipment and driving aids.

B.5.3.3. Materials Test Certificates and Warranties. Prior to delivery, the contractor must be required to submit the material certificates indicating conformance to the project specifications. Sheet pile materials must be certified by the manufacturer to meet the specified mechanical and section property requirements of this specification as follows:

B.5.3.3.1. Certificate of analysis from an ISO 9001:2015 certified compounder, indicating that virgin material meets the cell classification 1-4244-33 according to ASTM D4216 and the full sheet pile section meets mechanical requirements 2 through 8 of Table B.1.

B.5.3.3.2. Material certification indicating that the material being received by the contractor is in conformance with the geometric and material requirements outlined in the specifications.

B.5.3.3.3. A 50-Year Manufacturer's/OEM Warranty. Reseller or outsourcer warranties are not sufficient.

B.5.3.4. Delivery Storage and Handling. Storage and handling instructions will vary by manufacturer, product type, and shape. Storage and handling instructions must be provided by the manufacturer.

Appendix C
Example Load Combinations

C.1. General. This Appendix contains example load cases, with load combinations, for many common types of walls used for hydraulic applications. These load combinations should be used as a guide. Load combinations for actual projects may vary. Combinations that obviously do not control can be neglected. The load combinations shown apply to the serviceability cases or strength cases using allowable stress, factors of safety, or a single load factor. See EM 1110-2-2104 (reinforced concrete) or EM 1110-2-2107 (structural steel) for LRFD load cases.

C.2. Variable Names.

C.2.1. Table C.1 shows load types applied to walls covered in this manual and their variable names.

Table C.1
Load Names

Permanent Loads, Lp	**Variable**
Dead	D
Vertical Earth	EV
Lateral Earth	EH
Temporary Loads, Lt	
Hydrostatic	Hs
Thermal Expansion of Ice	IX
Soil Surcharge	ES
Live Load	L
Vehicle Live Loads	V
Dynamic Loads, Ld	
Hydrodynamic (except earthquake)	Hd
Wave	Hw
Debris/Floating Ice Impact	IM
Barge/Boat Impact	BI
Wind	W
Earthquake	EQ
Hawser	HA

C.2.2. Subscripts $_U$, $_N$, and $_X$ designate usual, unusual, and extreme load categories, respectively, as defined in section 6.3.3. The subscript $_{pr}$ designates a principal load, and the subscript $_c$ designates a companion load, as described in paragraph 6.3.4.2.

C.3. Earth Retaining Wall. Example load combinations for an earth retaining wall are shown in Table C.2.

Table C.2
Example Load Combinations for an Earth Retaining Wall

Load Case	Load Description	Load Category	Load Combination
1	Normal Operating	Usual	$D + EH + EV + Hs_U$
2	Normal Operating + Surcharge	Unusual	$D + EH + EV + Hs_U + ES_N$
3A	Earthquake – OBE	Unusual	$D + EH + EV + EQ + Hs_c$
3B	Earthquake – MDE	Extreme	$D + EH + EV + EQ + Hs_c$
4	Maximum Hydrostatic	Maximum	$D + EH + EV + Hs_{pr}$
5	Construction	Unusual	$D + EH + EV + ES_N$

C.3.1. Load Case 1, Normal Operating.

C.3.1.1. Dead load, lateral soil pressure, and weight of soil that may be present.

C.3.1.2. Water to level of drains, if present. Water at usual level determined by engineer if drains are not present.

C.3.2. Load Case 2, Normal Operating + Surcharge Loads. This combination is the same as 1 except a temporary surcharge is applied.

C.3.3. Load Case 3A, Earthquake – OBE. This is the same as Load Case 1, except with the addition of OBE-induced lateral and vertical loads. Open water or ground water is at a coincident elevation according to EM 1110-2-2100.

C.3.4. Load Case 3B, Earthquake – MDE. This is the same as Load Case 3A except with the MDE instead of OBE.

C.3.5. Load Case 4, Maximum Hydrostatic. This case is the same as Load Case 1 except the water table level in the backfill and the water on the resisting side are at levels creating the maximum possible differential loading. The load category depends on the return period of the maximum water loading, Hs_{pr}.

C.3.6. Load Case 5, Construction. Wall is in place with the loads that are possible during the construction period.

C.3.6.1. Dead load, lateral soil pressure, and weight of soil that may be present.

C.3.6.2. Soil surcharge.

C.4. Inland Floodwall. Example load combinations for a floodwall are shown in Table C.3.

Table C.3
Example Load Combinations for an Inland Floodwall

Load Case	Load Description	Load Category	Load Combination
1	Infrequent Flood	Unusual	$D + EH + EV + Hs_N + (Hw_c \text{ or } IM_c)$
2	Maximum Hydrostatic	Maximum	$D + EH + EV + Hs_{pr} + (Hw_c \text{ or } IM_c)$
3A	Earthquake – OBE	Unusual	$D + EH + EV + EQ + Hs_c$
3B	Earthquake – MDE	Extreme	$D + EH + EV + EQ + Hs_c$
4	Construction	Unusual	$D + EH + EV + ES_N$

C.4.1. Load Case 1, Infrequent Flood.

C.4.1.1. Water at an elevation of interest for the project. Frequently the 100-yr flood or project design event.

C.4.1.2. Dead load, lateral soil pressure, and weight of soil that may be present.

C.4.1.3. Wave or debris impact or ice impact loads that may be present as companion loads.

C.4.2. Load Case 2, Maximum Hydrostatic.

C.4.2.1. Combination of water levels on the waterside and landside that produce the maximum structural loading condition. The load category of this principal load is dependent on the return period of the maximum force, which is dependent on the wall geometry and other factors.

C.4.2.2. Dead load, lateral soil pressure, and weight of soil that may be present.

C.4.2.3. Wave or debris impact and ice impact loads that may be present as companion loads.

C.4.3. Load Case 3A, Earthquake – OBE. (Note: This load case only needs to be considered if the wall has a significant loading during the non-flood stage.)

C.4.3.1. River level or ground water is at a coincident elevation according to EM 1110-2-2100.

C.4.3.2. Dead load, lateral soil pressure, and weight of soil that may be present.

C.4.3.3. OBE-induced lateral and vertical loads.

C.4.4. Load Case 3B, Earthquake – MDE. (Note: This load case only needs to be considered if the wall has a significant loading during the non-flood stage.) Loads are the same as 3A, except with MDE (MDE is equal to MCE for a critical structure).

C.4.5. Load Case 4, Construction. Floodwall is in place with the loads that are possible during the construction period.

C.4.5.1. Dead load, lateral soil pressure, and weight of soil that may be present.

C.4.5.2. Soil surcharge.

C.5. Coastal Floodwall. Example load combinations for a coastal floodwall are shown in Table C.4.

Table C.4
Example Load Combinations for a Coastal Floodwall

Load Case	Load Description	Load Category	Load Combination
1A	Infrequent Surge + Wave	Unusual	$D + EH + EV + (Hs + Hw)_N$
1B	Maximum Surge + Wave	Maximum	$D + EH + EV + (Hs + Hw)_{pr}$
2	Normal Operating	Usual	$D + EH + EV + Hs_U + Hw_U$
3	Maximum Surge + Impact	Extreme	$D + EH + EV + Hs_{pr} + BI_c$
4A	Earthquake – OBE	Unusual	$D + EH + EV + EQ + Hs_c$
4B	Earthquake – MDE	Extreme	$D + EH + EV + EQ + Hs_c$
5	Construction	Unusual	$D + EH + EV + ES_N$

C.5.1. Load Case 1A, Infrequent Surge + Wave.

C.5.1.1. Design surge still water condition + the governing nonbreaking, breaking, or broken wave conditions, correlated with the design surge still water condition.

C.5.1.2. Dead load, lateral soil pressure, and weight of soil that may be present.

C.5.2. Load Case 1B, Maximum Surge + Wave.

C.5.2.1. Maximum possible loading from surge still water condition + the nonbreaking, breaking, or broken wave conditions correlated with that condition. The load category of this principal load is dependent on the return period of the maximum loading, which is dependent on the wall geometry and other factors.

C.5.2.2. Dead load, lateral soil pressure, and weight of soil that may be present.

C.5.3. Load Case 2, Normal Operating (Optional Serviceability Case).

C.5.3.1. Water is at the highest level with a 10-year return period on the waterside.

C.5.3.2. Wave force from a wind event with a 10-year return period.

C.5.3.3. Dead load, lateral soil pressure, and weight of soil that may be present.

C.5.4. Load Case 3, Maximum Surge + Impact.

C.5.4.1. Maximum possible hydrostatic loading condition from differential head.

C.5.4.2. Companion impact from aberrant barge or boat or debris that could occur during conditions that create the maximum surge loading.

C.5.4.3. Dead load, lateral soil pressure, and weight of soil that may be present.

C.5.5. Load Case 4A, Earthquake – OBE. (Note: This load case only needs to be considered if the wall has a significant loading during the non-flood stage.)

C.5.5.1. Water is at a coincident elevation according to EM 1110-2-2100.

C.5.5.2. OBE-induced lateral and vertical loads, if applicable.

C.5.5.3. Dead load, lateral soil pressure, and weight of soil that may be present.

C.5.6. Load Case 4B, Earthquake – MDE. (Note: This load case only needs to be considered if the wall has a significant loading during the non-flood stage.) Same as condition 4A, except with MDE (MDE is equal to MCE for a critical structure).

C.5.7. Load Case 5, Construction. Floodwall is in place with the loads that are possible during the construction period.

C.5.7.1. Dead load, lateral soil pressure, and weight of soil that may be present.

C.5.7.2. Soil surcharge.

C.6. Spillway Approach Channel Wall. Example load combinations for a spillway approach channel wall are shown in Table C.5.

Table C.5
Example Load Combinations for a Spillway Approach Channel Wall

Load Case	Load Description	Load Category	Load Combination
1A	Usual Low Pool	Usual	$D + EH + EV + Hs_U$
1B	Usual Low Pool + Surcharge	Unusual	$D + EH + EV + Hs_U + ES_N$
1C	Maximum Hydrostatic	Maximum	$D + EH + EV + Hs_{pr}$
2	Partial Rapid Drawdown, PMF	Extreme	$D + EH + EV + Hs_X$
3	Rapid Pool Rise, PMF	Extreme	$D + EH + EV + Hs_X$
4A	Earthquake – OBE	Unusual	$D + EH + EV + Hs_c + EQ$
4B	Earthquake – MDE	Extreme	$D + EH + EV + Hs_c + EQ$
5	Construction	Unusual	$D + EH + EV + ES_N$

C.6.1. Load Case 1A, Usual Low Pool.

C.6.1.1. Pool at low usual level with a 10-year average annual return period.

C.6.1.2. Backfill submerged to elevation of line of drains, and naturally drained above this elevation. If no drains exist, the engineers must determine the reasonable level of usual head differential across the wall.

C.6.1.3. Dead load, lateral soil pressure, and weight of soil that may be present.

C.6.2. Load Case 1B, this loading condition is same as 1A plus load from temporary surcharge.

C.6.3. Load Case 1C, this loading condition is same as 1A, except the water level, backfill, and water level in the pool combine to create the maximum possible hydrostatic loading. The load category of the principal hydrostatic load is dependent on the return period of the maximum force.

C.6.4. Load Case 2, Partial Rapid Drawdown, PMF.

C.6.4.1. Partial rapid drawdown of reservoir from PMF elevation (assumed return period > 750 years).

C.6.4.2. Water in channel to drawdown elevation, which may occur suddenly.

C.6.4.3. Fill submerged to profile reached during PMF, drained above.

C.6.4.4. Dead load, lateral soil pressure, and weight of soil that may be present.

C.6.5. Load Case 3, Rapid Rise of Reservoir, PMF.

C.6.5.1. Rapid rise of reservoir to PMF elevation (assumed return period > 750 years).

C.6.5.2. Water in channel to PMF conditions.

C.6.5.3. Fill submerged to concurrent water surface in fill.

C.6.5.4. Water above fill to PMF elevation.

C.6.5.5. Dead load, lateral soil pressure, and weight of soil that may be present.

C.6.6. Load Case 4A, Earthquake – OBE.

C.6.6.1. Coincident pool elevation according to EM 1110-2-2100.

C.6.6.2. OBE loads in most critical direction.

C.6.6.3. Dead load, lateral soil pressure, and weight of soil that may be present.

C.6.7. Load Case 4B, Earthquake – MDE. The same requirements as for Load Case 4A, except the MDE is used instead of the OBE. MDE is equal to MCE for a critical structure.

C.6.8. Load Case 5, Construction. Wall is in place with the loads possible during the construction period.

C.6.8.1. Dead load, lateral soil pressure, and weight of soil that may be present.

C.6.8.2. Soil surcharge.

C.7. Spillway Chute Slab Walls. Example load combinations for a spillway chute slab wall are shown in Table C.6.

Table C.6
Example Load Combinations for a Spillway Chute Slab Wall

Load Case	Load Description	Load Category	Load Combination
1A	Channel Empty	Usual	$D + EH + EV + Hs_U$
1B	Channel Empty + Surcharge	Unusual	$D + EH + EV + Hs_U + ES_N$
1C	Maximum Hydrostatic	Maximum	$D + EH + EV + Hs_{pr}$
2	Water in Channel, PMF	Extreme	$D + EH + EV + Hs_X$
3 A	Earthquake – OBE	Unusual	$D + EH + EV + EQ + Hs_c$
3 B	Earthquake – MDE	Extreme	$D + EH + EV + EQ + Hs_c$
4	Construction	Unusual	$D + EH + EV + ES_N$

C.7.1. Load Case 1A, Channel Empty.

C.7.1.1. Channel empty. (Note: This assumes that the channel frequently has little or no water in it. If it normally has water, the level is the low usual level, with a 10-year average annual return period. In other words, the level with an annual exceedance probability of 0.90.)

C.7.1.2. Backfill submerged to elevation of drains. Backfill naturally drained above elevation of drains. If no drains exist, the engineers must determine a reasonable level of water in the backfill.

C.7.1.3. Dead load, lateral soil pressure, and weight of soil that may be present.

C.7.2. Load Case 1B, Channel Empty + Surcharge. Same as 1A plus load from temporary surcharge. Assumes a maintenance condition with channel dewatered.

C.7.3. Load Case 1C, Maximum Hydrostatic. This loading condition is same as 1A, except the maximum hydrostatic level across the wall occurs. This occurs due to drawdown, high water in backfill, or a combination of both. The load category of the principal hydrostatic load is determined by the return period of the maximum force.

C.7.4. Load Case 2, Water in Channel, PMF.

C.7.4.1. Water in channel to PMF conditions (assumed return period > 750 years).

C.7.4.2. Backfill submerged to elevation of drains. If no drains water in backfill at normal level determined by the engineer.

C.7.4.3. Dead load, lateral soil pressure, and weight of soil that may be present.

C.7.5. Load Case 3A, Earthquake – OBE.

C.7.5.1. Coincident water and ground water elevation according to EM 1110-2-2100.

C.7.5.2. OBE loads in most critical direction.

C.7.5.3. Dead load, lateral soil pressure, and weight of soil that may be present.

C.7.6. Load Case 3B, Earthquake – MDE. The same conditions as for Case 3A, except the MDE is used instead of the OBE. MDE is equal to MCE for a critical structure.

C.7.7. Load Case 4, Construction. Wall is in place with the loads possible during the construction period.

C.7.7.1. Dead load, lateral soil pressure, and weight of soil that may be present.

C.7.7.2. Soil surcharge.

C.8. Spillway Stilling Basin Walls. Example load combinations for a stilling basin wall are shown in Table C.7.

Table C.7
Example Load Combinations for a Stilling Basin Wall

Load Case	Load Description	Load Category	Load Combination
1	Maintenance	Unusual	$D + EH + EV + Hs_U + ES_N$
2	Rapid Closure of Gates	Maximum	$D + EH + EV + Hs_{pr}$
3A	Frequent Flood Discharge	Usual	$D + EH + EV + (Hs + Hd)_U$
3B	Maximum Hydrostatic	Maximum Out	$D + EH + EV + (Hs + Hd)_{pr}$
3C	Maximum Hydrostatic	Maximum In	$D + EH + EV + (Hs + Hd)_{pr}$
4A	Earthquake – OBE	Unusual	$D + EH + EV + EQ + Hs_c$
4B	Earthquake – MDE	Extreme	$D + EH + EV + EQ + Hs_c$
5	Construction	Unusual	$D + EH + EV + ES_N$

C.8.1. Load Case 1, Maintenance.

C.8.1.1. Stilling basin empty.

C.8.1.2. Backfill submerged to drain or higher if, during construction or maintenance, higher elevation is anticipated with stilling basin unwatered.

C.8.1.3. Surcharge, if applicable.

C.8.1.4. Dead load, lateral soil pressure, and weight of soil that may be present.

C.8.2. Load Case 2, Rapid Closure of Gates (or Rapid Reduction of Discharge of Ungated Spillway).

C.8.2.1. Maximum reduction of discharge and tailwater, which is expected to occur rapidly. The load category of this principal hydrostatic load is dependent on the return period of the rapid closure condition.

C.8.2.2. Water surface inside stilling basin at tailwater corresponding to reduced flow conditions.

C.8.2.3. Backfill submerged to an elevation midway between tailwater before and after reduction (corresponding to 50 percent reduction by drainage).

C.8.2.4. Dead load, lateral soil pressure, and weight of soil that may be present.

C.8.3. Load Case 3A, Frequent Flood Discharge.

C.8.3.1. Water surface combination of hydraulic jump profile and tailwater creates the highest water loading from differential head (combination of hydrostatic and hydrodynamic loads from the jump) for a usual discharge condition (return period of less than 10 years).

C.8.3.2. Backfill submerged to the corresponding tailwater conditions or drains, whichever is highest.

C.8.3.3. Uplift across base varying uniformly from tailwater at heel to a value midway between tailwater and jump profile at the toe (the latter corresponds to 50 percent relief of unbalanced pressure by floor drainage).

C.8.3.4. Dead load, lateral soil pressure, and weight of soil that may be present.

C.8.4. Load Case 3B, Maximum Hydrostatic Loading – In. Maximum water loading from differential head across the wall from the outside of the stilling basin.

C.8.4.1. Water surface combination of hydraulic jump profile and tailwater outside of the wall to create the highest water loading (combination of hydrostatic and hydrodynamic loads from the jump). The load category of this principal load is dependent on the return period of the conditions creating the maximum hydrostatic load.

C.8.4.2. Backfill submerged to the corresponding tailwater condition or drains, whichever is higher.

C.8.4.3. Uplift across base varying uniformly from tailwater at heel to a value midway between tailwater and jump profile at the toe (the latter corresponds to 50 percent relief of unbalanced pressure by floor drainage).

C.8.4.4. Dead load, lateral soil pressure, and weight of soil that may be present.

C.8.5. Load Case 3C, Maximum Hydrostatic Loading – Out. Maximum head across the wall from inside of the stilling basin.

C.8.5.1. At the downstream of the expected hydraulic jump location cross waves create a differential from inside the stilling basin to the outside. The combination of cross wave size and water depth that creates the highest water loading (combination of hydrostatic and hydrodynamic loads from the jump) is used. The load category of this principal load is dependent on the return period of the conditions creating the maximum hydrostatic load.

C.8.5.2. Backfill submerged to the corresponding tailwater conditions.

C.8.5.3. Uplift equal to tailwater.

C.8.5.4. Dead load, lateral soil pressure, and weight of soil that may be present.

C.8.6. Load Case 4A, Earthquake – OBE.

C.8.6.1. Coincident water and ground water elevation from EM 1110-2-2100.

C.8.6.2. OBE loads in most critical direction.

C.8.6.3. Dead load, lateral soil pressure, and weight of soil that may be present.

C.8.7. Load Case 4B, Earthquake – MDE. The requirements are the same as for Load Case 4A, except the MDE is used instead of the OBE. MDE is equal to MCE for a critical structure.

C.8.8. Load Case 5, Construction. Wall is in place with the loads possible during the construction period.

C.8.8.1. Dead load, lateral soil pressure, and weight of soil that may be present.

C.8.8.2. Soil surcharge.

C.9. Dam Walls. Example load combinations for a dam wall are shown in Table C.8.

Table C.8
Example Load Combinations for a Dam Wall

Load Case	Load Description	Load Category	Load Combination
1A	Usual Pool	Usual	$D + EH + EV + Hs_U + Hw_c$
1B	Maximum Design Pool	Maximum	$D + EH + EV + Hs_{pr} + Hw_c$
2	Design Wave	Extreme	$D + EH + EV + Hw_X + Hs_c$
3A	Earthquake – OBE	Unusual	$D + EH + EV + EQ + Hs_c$
3B	Earthquake – MDE	Extreme	$D + EH + EV + EQ + Hs_c$
4	Impact	Extreme	$D + EH + EV + IM_X$ or $BI_X + Hs_c$
5	Thermal Ice Expansion	Extreme	$D + EH + EV + IX_X + Hs_c$
6	Construction	Unusual	$D + EH + EV + ES_N$

C.9.1. Load Case 1A, Usual Pool.

C.9.1.1. Pool at usual level, with a 10-year return period.

C.9.1.2. Companion wave force from a wind event with a 10-year return period.

C.9.1.3. Dead load, lateral soil pressure, and weight of soil that may be present.

C.9.2. Load Case 1B, Maximum Design Pool.

C.9.2.1. Pool at level with maximum load. The load category of this principal load is dependent on the return period of the maximum hydrostatic loading from differential head, which is dependent on the wall geometry and other factors.

C.9.2.2. Companion wave force from a wind event with a 10-year return period.

C.9.2.3. Dead load, lateral soil pressure, and weight of soil that may be present.

C.9.3. Load Case 2, Design Wave.

C.9.3.1. Pool at level with a 10-year return period.

C.9.3.2. Wave force from a wind event with a 10,000-year return period.

C.9.3.3. Dead load, lateral soil pressure, and weight of soil that may be present.

C.9.4. Load Case 3A, Earthquake – OBE. (Note: This load case only needs to be considered if the wall has a significant loading during the coincident pool stage.)

C.9.4.1. Coincident pool elevation according to EM 1110-2-2100.

C.9.4.2. Dead load, lateral soil pressure, and weight of soil that may be present.

C.9.4.3. OBE-induced lateral and vertical loads.

C.9.5. Load Case 3B, Earthquake – MDE. This load case is the same as 3A with MDE. MDE is equal to MCE for a critical structure.

C.9.6. Load Case 4, Impact.

C.9.6.1. Pool at level with 10-year return period.

C.9.6.2. Dead load, lateral soil pressure, and weight of soil that may be present.

C.9.6.3. Impact from extreme debris, ice or vessel or considered upper bound.

C.9.7. Load Case 5, Thermal Ice Expansion.

C.9.7.1. Pool at level with 10-year return period.

C.9.7.2. Dead load, lateral soil pressure, and weight of soil that may be present.

C.9.7.3. Load from thermal expansion of ice considered upper bound.

C.9.8. Load Case 6, Construction. Wall is in place with the loads possible during the construction period.

C.9.8.1. Dead load, lateral soil pressure, and weight of soil that may be present.

C.9.8.2. Soil surcharge.

C.10. Dam Crest Walls. Example load combinations for a dam crest wall are shown in Table C.9. Note: As required in paragraph 4.4.3.4, for dam crest walls, extreme loads are analyzed using minimum requirements for unusual loads except for earthquake.

Table C.9
Example Load Combinations for a Dam Crest Wall

Load Case	Load Description	Load Category	Load Combination
1	Maximum Design Pool	Maximum	$D + EH + EV + Hs_{pr} + Hw_U$
2	Maximum Wave	Extreme	$D + EH + EV + Hs_U + Hw_X$
3A	Earthquake – OBE	Unusual	$D + EH + EV + EQ + Hs_c$
3B	Earthquake – MDE	Extreme	$D + EH + EV + EQ + Hs_c$
4	Construction	Unusual	$D + EH + EV + ES_N$

C.10.1. Load Case 1, Maximum Design Pool.

C.10.1.1. Pool maximum possible level. The load category of this principal load is dependent on the return period of the maximum force, which is dependent on the wall geometry and other factors.

C.10.1.2. Dead load, lateral soil pressure, and weight of soil that may be present. Resisting soil pressures must account for the geometry of the dam crest.

C.10.1.3. Wave force from a wind event with 10-year return period.

C.10.2. Load Case 2, Maximum Wave. (Note: Factors of safety and load factors for the unusual load category are used for extreme wave loads for this wall type.)

C.10.2.1. Pool at level with 10-year return period.

C.10.2.2. Dead load, lateral soil pressure, and weight of soil that may be present. Resisting soil pressures must account for the geometry of the dam crest.

C.10.2.3. Wave force from a wind event with 10,000-year return period.

C.10.3. Load Case 3A, Earthquake – OBE. (Note: This load case need only be considered if the wall has a significant loading during the normal pool stage.)

C.10.3.1. Coincident pool elevation according to EM 1110-2-2100.

C.10.3.2. OBE-induced lateral and vertical loads.

C.10.3.3. Dead load, lateral soil pressure, and weight of soil that may be present.

C.10.4. Load Case 3B, Earthquake – MDE. This load case is the same as 3A with MDE. For critical walls MDE = MCE.

C.10.5. Load Case 4, Construction. Wall is in place with the loads possible during the construction period.

C.10.5.1. Dead load, lateral soil pressure, and weight of soil that may be present.

C.10.5.2. Soil surcharge.

C.11. Seawall. Example load combinations for a seawall are shown in Table C.10. Seawalls often retain soil on the landside of the wall and the load cases reflect that condition.

Table C.10
Example Load Combinations for a Seawall

Load Case	Load Description	Load Category	Load Combination
1A	Normal Operating – High Tide	Usual	$D + EH + EV + Hs_U + Hw_c$
1B	Normal Operating – Low Tide	Usual	$D + EH + EV + Hs_U$
2A	Normal Operating + Surcharge	Unusual	$D + EH + EV + Hs_U + ES_N$
2B	Normal Operating + Short Duration Water Load	Unusual	$D + EH + EV + Hs_N$
3	Maximum Wave	Extreme	$D + EH + EV + Hw_X + Hs_c$
4A	Earthquake – OBE	Unusual	$D + EH + EV + EQ + Hs_c$
4B	Earthquake – MDE	Extreme	$D + EH + EV + EQ + Hs_c$
5	Construction	Unusual	$D + EH + EV + ES_N$

C.11.1. Load Case 1A, Normal Operating – High Tide.

C.11.1.1. Pool at usual high tide water level.

C.11.1.2. Dead load, lateral soil pressure, and weight of soil that may be present.

C.11.1.3. Wave force from a wind event with 10-year return period.

C.11.2. Load Case 1B, Normal Operating – Low Tide.

C.11.2.1. Pool at usual, low tide water level.

C.11.2.2. Dead load, lateral soil pressure, and weight of soil that may be present.

C.11.2.3. No wave.

C.11.3. Load Case 2A, Normal Operating + Surcharge. This load case is the same as 1B except a temporary surcharge is applied.

C.11.4. Load Case 2B, Normal Operating + Short Duration Water Loads. This load case is the same as 1B except the water table level in the backfill rises or water on the resisting side lowers.

C.11.5. Load Case 3, Maximum Wave.

C.11.5.1. Pool at level with 10-year return period.

C.11.5.2. Dead load, lateral soil pressure, and weight of soil that may be present.

C.11.5.3. Wave force from a wind event with 3,000-year return period (assuming the seawall is classified as a normal structure).

C.11.6. Load Case 4A, Earthquake – OBE. (Note: This load case need only be considered if the wall has a significant loading during the normal pool stage.)

C.11.6.1. Backfill in place to final elevation.

C.11.6.2. Coincident water and groundwater elevation according to EM 1110-2-2100.

C.11.6.3. Dead load, lateral soil pressure, and weight of soil that may be present.

C.11.6.4. OBE-induced lateral and vertical loads.

C.11.7. Load Case 4B, Earthquake – MDE. The conditions for this load case are the same as 4A, except that the MDE is used.

C.11.8. Load Case 5, Construction. Wall is in place with the loads possible during the construction period.

C.11.8.1. Dead load, lateral soil pressure, and weight of soil that may be present.

C.11.8.2. Soil surcharge.

C.12. Floodwall Closure. The flood load cases are the same as for the Inland Floodwall or Coastal Floodwall above. The following example load cases are in additional to those. Example additional load combinations for a floodwall closure are shown in Table C.11.

Table C.11
Example Additional Load Combinations for a Floodwall Closure

Load Case	Load Description	Load Category	Load Combination
Inland or Coastal	Floodwall Cases	Unusual or Extreme	Table C.3 or C.4
T	Traffic	Usual	AASHTO, AREA, Etc.

C.12.1. Loading Condition, Flood. See sections C.4 and C.5.

C.12.2. Loading Condition, Traffic. Load Cases per AASHTO, AREA, or other local authority.

Appendix D
Design Example – Shallow-Founded T-Type Earth Retaining Wall

D.1. Problem Statement. The USACE has authorized the design of a concrete T-wall, as an earth retaining Inlet Wing Wall, along the Arkansas River in Little Rock, Arkansas (Latitude 34.794, Longitude -92.358). The wall will retain soil to an elevation of 240 ft. on the driving side. The project is located within the Moderate Seismic Hazard Region, as delineated in the Seismic Hazard Map included in ER 1110-2-1806. The T-wall in this example will be designed according to Chapter 7 of this manual, Analysis and Design – Concrete Walls with a Shallow Foundation. A cross section of the retaining wall (with final design dimensions) is shown in Figure D.1. Units are in English. See Appendix A for metric conversions.

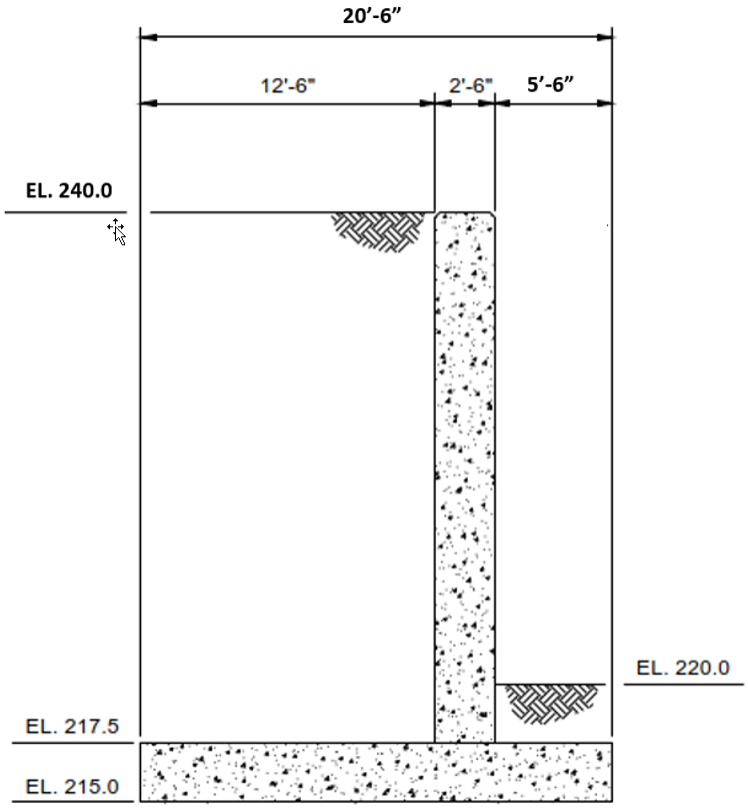

Figure D.1. Retaining Wall Section

D.2. Structure Classification. According to section 3.2.1 of this manual and Appendix H of EM 1110-2-2100, the wall is a Normal structure. It is unlikely that failure of the retaining wall would directly or indirectly lead to loss of life.

D.3. Geotechnical Investigation.

D.3.1. A seismic piezocone was used to advance five CPTU soundings at approximately 500-foot spacing along the alignment. CPT data includes continuous readings of tip resistance,

sleeve friction, and pore pressure for each sounding. In addition, shear wave velocity data was collected along the full depth of two of the soundings. A Standard Penetration Test (SPT) drive boring was completed as a companion boring to a CPT advanced near the center of the alignment. Particle size gradation tests were performed on the collected SPT samples.

D.3.2. Figure D.2 represents the locations of the CPT soundings and boring completed for the project. Figure D.3 shows the seismic CPT and boring SPT data including SPT N-value and CPT tip resistance (q_t), friction ratio (F_r), pore pressure, and shear wave velocity (V_s) vs. elevation.

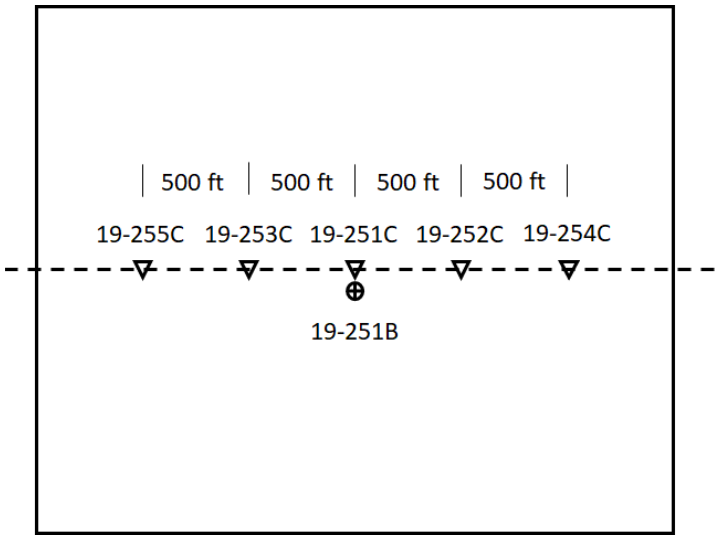

Figure D.2. Investigation Location Map

D.3.3. Bulk samples of proposed fill materials were collected from a local borrow source to determine material properties for design. Atterberg limits and natural moisture content tests, unconsolidated undrained (UU) triaxial shear strength, and consolidated undrained (CU) R-bar triaxial shear strength tests were performed on reconstituted compacted samples.

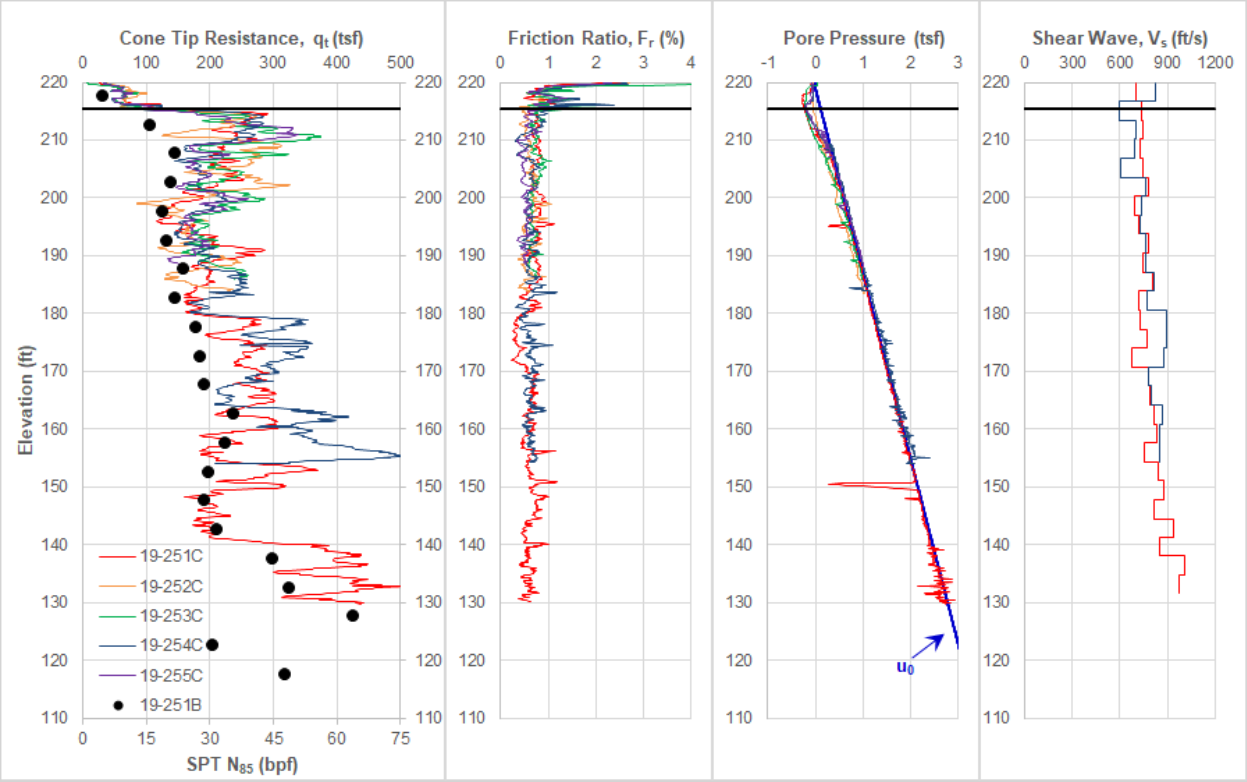

Figure D.3. Seismic Piezocone Penetration Test and Boring SPT Results at Site

D.4. Geotechnical Properties.

D.4.1. Undrained Strength of Fill Material.

D.4.1.1. Results from UU tests on reconstituted compacted fill are given in Table D.1. The results are processed into undrained strength in Table D.2 and compared to a design strength to evaluate the "1/3 – 2/3" rule. The 1/3 – 2/3 rule is discussed in Chapter 5 and elaborated on in the following paragraphs. Undrained strength results are shown graphically in Figure D.4.

Table D.1
Laboratory UU Data on Reconstituted Compacted Fill

Boring		12-160	12-160	14-211	14-211	14-211	15-224	15-224	15-224	15-230	15-230
ID		1	2	3	4	5	6	7	8	9	10
Test Type		UU	UU	UU	UU	UU	UU	UU	UU	UU	UU
Mid-Depth (ft)		NA		NA			NA			NA	
Elevation (ft)		NA		NA			NA			NA	
Sample		Bulk		Bulk			Bulk			Bulk	
LL (%)		72		86			88			72	
PL (%)		20		22			23			23	
PI (%)		52		52			52			49	
Initial w (%)		26.2	26.7	33	32.4	34.7	35	35	34.6	34.7	35
Initial S (%)		82.7	82.2	87.5	85.9	88.5	89	89	88.8	89.9	89.8
At Test w (%)		34.5	34.5	36.1	36.1	36.1	39.2	39.2	39.2	38.9	38.8
At Test S (%)		100	100	100	100	100	100	100	100	100	100
Specimen		1	2	1	2	3	1	2	3	1	2
Peak Stress Ratio	$\sigma_{1c} = \sigma_{3c}$ (tsf)	1	1.5	0.5	1	1.5	0.5	1	2	0.5	1
	u_b (tsf)	0	0	0	0	0	0	0	0	0	0
	σ_{1f} (tsf)	5.23	6.36	2.01	2.63	2.97	1.68	2.49	3.25	2.18	2.81
	σ_{3f} (tsf)	1	1.5	0.5	1	1.5	0.5	1	2	0.5	1
	Δu (tsf)	NA	NA	NA	NA	NA	NA	NA	NA	NA	NA
20% Axial Strain	$\sigma_{1c} = \sigma_{3c}$ (tsf)	1	1.5	0.5	1	1.5	0.5	1	2	0.5	1
	u_b (tsf)	0	0	0	0	0	0	0	0	0	0
	σ_{1f} (tsf)	4.90	5.09	1.89	2.63	2.82	1.65	2.46	3.24	1.98	2.79
	σ_{3f} (tsf)	1	1.5	0.5	1	1.5	0.5	1	2	0.5	1
	Δu (tsf)	NA	NA	NA	NA	NA	NA	NA	NA	NA	NA

Table D.2
Processed Laboratory UU Data on Reconstituted Compacted Fill at 20% Strain

20% Axial Strain											
	$\sigma_{1c} = \sigma_{3c}$ (psf)	2000	3000	1000	2000	3000	1000	2000	4000	1000	2000
	s_u (psf)	3900	3590	1390	1630	1320	1150	1460	1240	1480	1790
	s_u 1/3 - 2/3	Higher	Higher	Higher	Higher	Lower	Lower	Higher	Lower	Higher	Higher

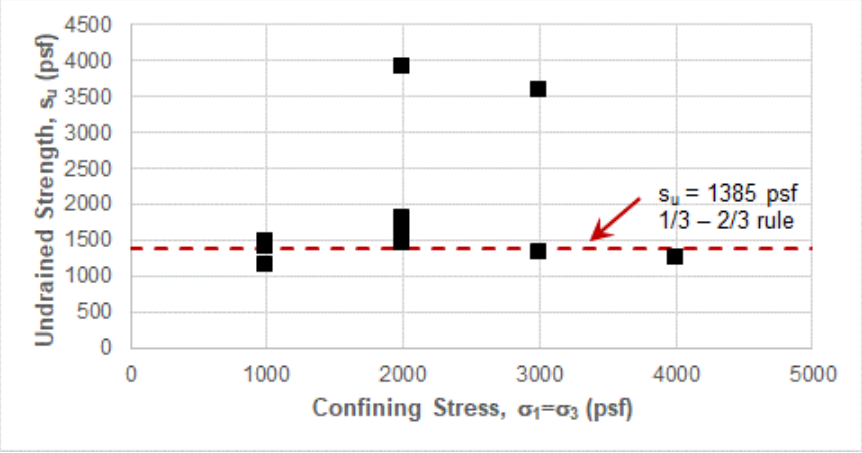

Figure D.4. Laboratory UU Data on Reconstituted Compacted Fill at 20% Strain

D.4.1.2. The process used to select a design undrained strength was the following:

D.4.1.2.1. Calculate undrained strength (s_u) for each test. For test ID 3 from Table D.1 (first test, Boring 14-211), values are calculated as follows. Stresses at 20 percent strain are used for this example.

$$s_u = (\sigma_{1f} - \sigma_{3f})/2 = (1.89 \text{ tsf} - 0.5 \text{ tsf})/2 = 0.695 \text{ tsf} \times 2000 \text{ psf/tsf} = 1390 \text{ psf}$$

D.4.1.2.2. For undrained conditions use $\phi = 0^o$, or a strength that is constant regardless of confining stress.

D.4.1.2.3. Select a starting estimate of s_u. The value will be close to the average value of the s_u data from Table D.2 less 1/2 of the standard deviation.

Average(3900,3590,1390,1630,1320,1150,1460,1240,1480,1790) = 1895 psf

Stdev(3900,3590,1390,1630,1320,1150,1460,1240,1480,1790) = 995 psf

Initial s_u Estimate = 1895 psf – 995 psf / 2 = 1398 psf

D.4.1.2.4. Assess the 1/3 – 2/3 rule by evaluating the number of test measurements lower than the initial s_u estimate. For a s_u of 1398 psf, Test ID 3, 5, 6, and 8 have s_u values lower than 1398 psf, or 4/10 tests. A ratio of 4/10 is greater than 1/3, the 1/3 – 2/3 rule criteria is not met. One less test needs to have a s_u lower than the design value of s_u to meet the 1/3 – 2/3 rule.

D.4.1.2.5. Lower the s_u estimate.

Updated s_u estimate = 1385 psf

D.4.1.2.6. Assess the 1/3 – 2/3 rule by evaluating the number of test measurements lower than updated s_u estimate. For a s_u of 1385 psf, Test ID 5, 6, and 8 have s_u values lower than 1385 psf, or 3/10 tests. A ratio of 3/10 is lower than 1/3, the 1/3 – 2/3 rule criteria is met. A design strength of 1385 psf is selected.

D.4.2. Drained Strength of Fill Material. Results from R-bar (CU) tests on reconstituted compacted fill are given in Table D.3. The results are processed into shear stress and effective normal stress at failure in Table D.4, and compared to design strength parameters to evaluate the 1/3 – 2/3 rule. Processed data are shown in Figure D.5 and in Figure D.6.

Table D.3
Laboratory R-Bar Data on Reconstituted Compacted Fill

Boring		12-160	12-160	12-160	13-171	14-211	14-211	14-211	15-224	15-224	15-224
ID		1	2	3	4	5	6	7	8	9	10
Test Type		R-bar	R-bar	R-bar	R-bar	R-bar	R-bar	R-bar	R-bar	R-bar	R-bar
Mid-Depth (ft)		NA			NA	NA			NA		
Elevation (ft)		NA			NA	NA			NA		
Sample		Bulk			Bulk	Bulk			Bulk		
LL (%)		71			90	86			88		
PL (%)		19			24	22			23		
PI (%)		52			66	64			65		
Initial w (%)		30.2	30	29.9	27.1	33.1	33.8	33.2	34.5	35.4	35.4
Initial S (%)		87.7	87.3	89.3	76.8	59.5	90.5	90.6	88.5	90	90
At Test w (%)		34.2	34.5	32.8	28.6	36.3	35.4	36	38.8	36.2	33.6
At Test S (%)		100	100	100	100	100	99.6	99.9	99.6	99.5	99.3
Specimen		1	2	3	1	1	2	3	1	2	3
Peak Stress Ratio	$\sigma_{1c} = \sigma_{3c}$ (tsf)	7.14	7.14	7.13	5.8	4.5	8.1	6	6.3	6.1	6.8
	u_b (tsf)	6.67	6.15	5.64	3.3	4	7.1	4	5.8	5.1	4.8
	$\sigma'_{1c} = \sigma'_{3c}$ (tsf)	0.47	0.99	1.49	2.5	0.5	1	2	0.5	1	2
	σ'_{1f} (tsf)	0.88	1.43	2.09	3.37	0.74	1.54	2.79	0.84	1.36	2.85
	σ'_{3f} (tsf)	0.25	0.49	0.68	1.27	0.09	0.45	1.1	0.18	0.45	1.13
	Δu (tsf)	0.22	0.5	0.81	1.23	0.41	0.55	0.9	0.32	0.55	0.87
20% Axial Strain	$\sigma_{1c} = \sigma_{3c}$ (tsf)	7.14	7.14	7.13	5.8	4.5	8.1	6	6.3	6.1	6.8
	u_b (tsf)	6.67	6.15	5.64	3.3	4	7.1	4	5.8	5.1	4.8
	$\sigma'_{1c} = \sigma'_{3c}$ (tsf)	0.47	0.99	1.49	2.5	0.5	1	2	0.5	1	2
	σ'_{1f} (tsf)	1.00	1.49	2	3.46	0.78	1.68	2.99	0.97	1.71	3
	σ'_{3f} (tsf)	0.31	0.51	0.87	1.33	0.18	0.58	1.31	0.29	0.65	1.37
	Δu (tsf)	0.16	0.48	0.62	1.17	0.32	0.42	0.69	0.21	0.35	0.63

Table D.4
Processed Laboratory R-Bar Data on Reconstituted Compacted Fill

20% Axial Strain	s'_f (tsf)	0.65	1.00	1.44	2.40	0.48	1.13	2.15	0.63	1.18	2.19
	t_f (tsf)	0.34	0.49	0.57	1.07	0.30	0.55	0.84	0.34	0.53	0.82
	ϕ'_{sec} (deg)	31.7	29.3	23.2	26.4	38.7	29.1	23.0	32.7	26.7	21.9
	τ_f (tsf)	0.29	0.43	0.52	0.95	0.23	0.48	0.77	0.29	0.47	0.76
	σ'_n (tsf)	0.47	0.76	1.21	1.92	0.29	0.86	1.82	0.45	0.94	1.88
	c'-ϕ' 1/3 - 2/3	Higher	Higher	Lower	Higher	Higher	Higher	Lower	Higher	Higher	Lower

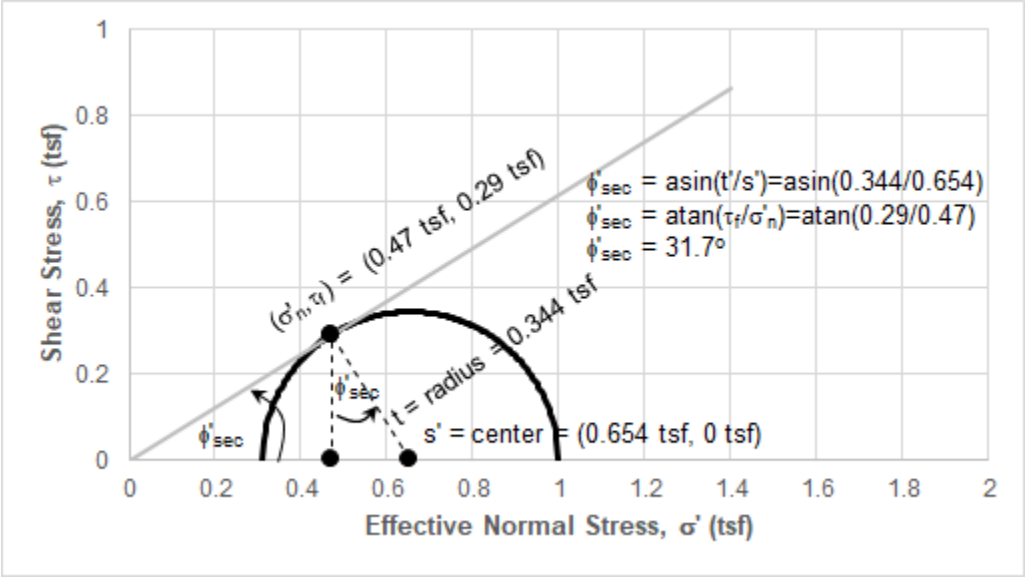

Figure D.5. Mohr's Circle of Stress for Detailed R-Bar Calculations

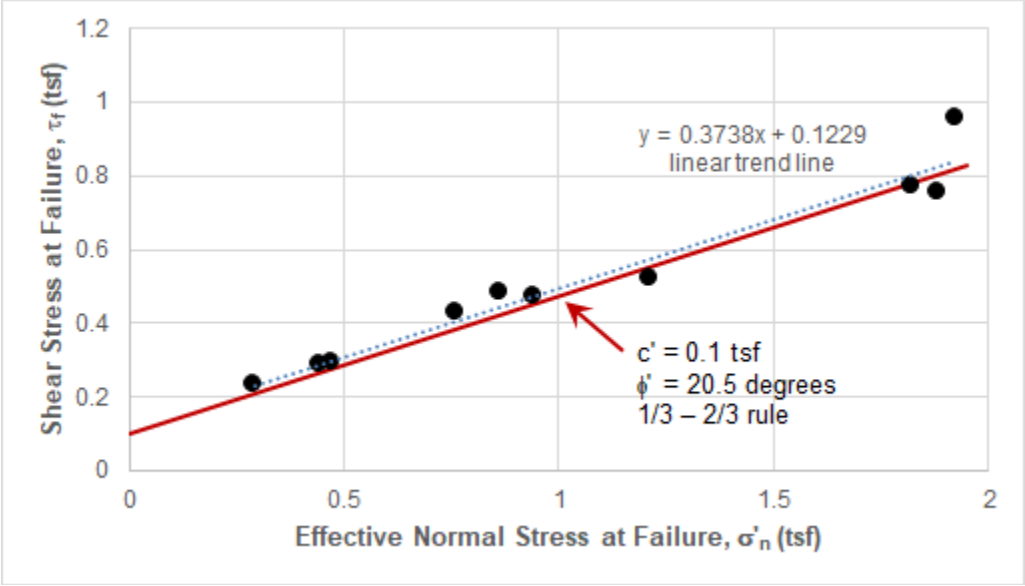

Figure D.6. Laboratory R-Bar Data on Reconstituted Compacted Fill at 20% Strain

D.4.2.1. The process used to select a design drained strength was:

D.4.2.1.1. Calculate stress points (s' and t) that define the effective stress Mohr circle for each test. For test ID 1 from Table D.3 (first test, Boring 12-160), values are calculated as follows. Stresses at 20 percent axial strain are used for this example. The stress points and procedure to evaluate τ_f and σ'_n are illustrated in Figure D.5.

s' = center of Mohr's circle

$s' = (\sigma'_{1f} + \sigma'_{3f})/2$ = (0.997 tsf + 0.310 tsf)/2 = 0.654 tsf

t = radius of Mohr's circle

$t = (\sigma'_{1f} - \sigma'_{3f})/2$ = (0.997 tsf – 0.31 tsf)/2 = 0.344 tsf

D.4.2.1.2. Calculate the secant friction angle (ϕ'_{sec}) tangent to the Mohr Circle assuming no cohesion.

$\phi'_{sec} = asin(t/s')$ = asin(0.344/0.655) = 31.7 degrees

D.4.2.1.3. Calculate the shear force at failure (τ_f) based on the tangent point of the Mohr Circle.

$\tau_f = t \cdot cos(\phi'_{sec})$ = 0.344 tsf cos(31.7) = 0.29 tsf

D.4.2.1.4. Calculate the effective normal stress on the failure plane based on the shear stress at failure and secant friction angle.

$\sigma'_n = \tau_f / tan(\phi'_{sec})$ = 0.29 / tan(31.7) = 0.47 tsf

D.4.2.1.5. Plot effective normal stress at failure vs. shear stress at failure for each test, as shown in Figure D.6. In this example there are 10 points for 10 tests.

D.4.2.1.6. Determine the best fit linear failure envelope using linear regression. As shown in Figure D.6, the linear regression was performed using an automated process in Excel. The automated process led to the initial estimate parameters. The slope of the line needs to be converted into a friction angle.

y = 0.3738 x + 0.1229 tsf

c' = 0.1229 tsf

tan ϕ' = 0.3738 → ϕ' = atan(0.3738) = 20.5 degrees

$\tau_f = c' + \sigma'_n \, tan \, \phi'$ = 0.1229 tsf + $\sigma'_n \, tan($20.5)

D.4.2.1.7. Assess the 1/3 – 2/3 rule by evaluating the number of test measurements lower than selected design value. For τ_f based on c' = 0.1229 tsf and ϕ' = 20.5 degrees, Test ID 1, 3, 7, 8, 9, and 10 have lower τ_f values than the failure envelope, or 6/10 tests. A ratio of 6/10 is more than 1/3, the 1/3 – 2/3 rule criteria is not met. Three less tests need to have a τ_f values lower than the design failure envelope to meet the 1/3 – 2/3 rule.

D.4.2.1.8. Lower the failure envelope by keeping ϕ' constant and reducing c'.

Updated $\tau_f = c' + \sigma'_n \tan \phi' = 0.1 \text{ tsf} + \sigma'_n \tan(20.5)$

D.4.2.1.9. Assess the 1/3 – 2/3 rule by evaluating the number of test measurements lower than selected design value. For τ_f based on c' = 0.1 tsf and ϕ' = 20.5 degrees, Test ID 3, 7, and 10 have lower τ_f values than the failure envelope, or 3/10 tests. A ratio of 3/10 is less than 1/3, the 1/3 – 2/3 rule criteria is met.

D.4.2.2. Design unit weight values were selected as the average of values measured in laboratory tests completed on samples from the completed borehole. An average unit weight value of 115 pcf was measured for the natural sands. The saturated water content of the compacted clays was 37.5 percent, leading to a unit weight of 115 pcf for G_s of 2.7.

D.4.3. Relative Density and Friction Angle of Sands. The relative density and friction angle of sands will be assessed using the results of CPT and SPT in situ tests. The readers should note that that correlations presented in many publications are best estimate values (see Kulhawy & Mayne 1990, Mayne 2007, Robertson & Cabel 2016). To account for uncertainty in the correlations, these values need to be reduced for use in design. The process in this EM is to use best estimate relative density correlations and resulting design friction angle based on Table 5.4.

D.4.3.1. Furthermore, the spatial variability in soil resistance needs to be accounted for in assessment of design soil properties. The 1/3 – 2/3 rule will be applied to estimates of relative density from in situ tests to develop a design relative density profile for assessment of friction angle.

D.4.3.2. In Table D.5 the reader can find results of relative density calculations for CPT 19-254C. These results are for three elevation ranges, shown in the second column; 213–212 ft.; 208–207 ft.; and 203–202 ft. Calculation details are summarized for Row 94 in Table D.5, which is CPT 19-254C at elevation 212.54 ft.

D.4.3.2.1. Calculate the effective stress at the depth and water conditions which occurred during the cone penetration test. The ground surface was at an elevation of 220 ft. and the water table was 1 foot below that at elevation 219 ft. The elevation of the reading is 212.54 ft.

z = depth below ground surface

z = 220 ft – 212.54 ft = 7.46 ft

σ_{v0} = total vertical stress at the reading elevation

σ_{v0} = 7.46 ft x 115 pcf x 1 tsf/2000 psf = 0.429 tsf

u_0 = in situ pore pressure condition prior to loading at the reading elevation

u_0 = (219 ft – 212.54 ft) x 62.4 pcf x 1 tsf/2000 psf = 0.202 tsf

$\sigma'_{v0} = \sigma_{v0} - u_0$ = effective vertical stress at the reading elevation

σ'_{v0} = 0.429 tsf – 0.202 tsf = 0.227 tsf

D.4.3.2.2. Calculate the effective stress normalized cone tip resistance. For relative density correlations in sands (see Mayne 2007, Robertson & Cabel 2016):

$$Qcn = C_N \cdot (q_t/p_a) = (q_t/p_a)/(\sigma'_{v0}/p_a)^{0.5} = (q_t/\sigma_{atm})/(\sigma'_{v0}/\sigma_{atm})^{0.5}$$

Where:

C_N = an effective stress correction factor = $(p_a/\sigma'_{v0})^{0.5}$

Qcn = a vertical effective stress normalized cone tip resistance

$p_a = \sigma_{atm}$ = a reference stress equal to atmospheric pressure, which depends on the units used for σ'_{v0} and q_t

If σ'_{v0} or q_t are in tsf, use $p_a = \sigma_{atm}$ = 1.058 tsf,

If σ'_{v0} or q_t are in psf, use $p_a = \sigma_{atm}$ = 2116 psf,

If σ'_{v0} or q_t are in kPa, use $p_a = \sigma_{atm}$ = 101.3 kPa,

If σ'_{v0} or q_t are in MPa, use $p_a = \sigma_{atm}$ = 0.1013 MPa.

For elevation 212.54 (Row 94):

Qcn = (279 tsf / 1.058 tsf) / (0.227 tsf / 1.058 tsf)$^{0.5}$ = 569

D.4.3.2.3. Calculate the relative density based on CPT.

- The CPT correlation described by Equation 35 in Mayne (2007) is used in this example:

$$D_R(\%) = 100 \cdot \left[0.268 \cdot ln\left(\frac{q_t/\sigma_{atm}}{\sqrt{\sigma'_{v0}/\sigma_{atm}}}\right) - 0.675\right]$$

$D_R = 100 \cdot [0.268 \cdot \ln(Qcn) - 0.675]$

$D_R = 100 \cdot [0.268 \cdot \ln(569) - 0.675] = 103\%$

- Relative density is considered to range from 0 percent to 100 percent. Values higher than 100 percent may be calculated using relative density correlations, particularly at shallow depths. In these cases, the soil can be considered very dense.

Table D.5
Raw and Processed CPT Data on Natural Sand at Three Elevation Ranges (213–212 ft.; 208–207 ft.; 203–202 ft.)

Row	El (ft)	19-254C qt (tsf)	19-254C Fr (%)	z (ft)	γ (pcf)	σ_{v0} (tsf)	u0 (tsf)	σ'_{v0} (tsf)	C_N	Qcn	D_r
88	213.03	280	0.85	6.97	115	0.40	0.19	0.21	2.22	588	103
89	212.95	285	0.86	7.05	115	0.41	0.19	0.22	2.21	594	104
90	212.87	284	0.88	7.13	115	0.41	0.19	0.22	2.20	589	103
91	212.78	283	0.87	7.22	115	0.42	0.19	0.22	2.19	586	103
92	212.70	279	0.86	7.30	115	0.42	0.20	0.22	2.18	573	103
93	212.62	282	0.83	7.38	115	0.42	0.20	0.23	2.17	577	103
94	212.54	279	0.85	7.46	115	0.43	0.20	0.23	2.16	569	103
95	212.46	278	0.85	7.54	115	0.43	0.20	0.23	2.15	563	102
96	212.37	278	0.85	7.63	115	0.44	0.21	0.23	2.14	560	102
97	212.29	259	0.90	7.71	115	0.44	0.21	0.23	2.13	519	100
98	212.21	275	0.82	7.79	115	0.45	0.21	0.24	2.12	550	102
99	212.13	272	0.78	7.87	115	0.45	0.21	0.24	2.11	542	101
100	212.05	265	0.76	7.95	115	0.46	0.22	0.24	2.10	525	100
149	208.03	174	0.44	11.97	115	0.69	0.34	0.35	1.75	288	84
150	207.95	191	0.40	12.05	115	0.69	0.34	0.35	1.74	315	87
151	207.86	206	0.38	12.14	115	0.70	0.35	0.35	1.74	339	89
152	207.78	213	0.37	12.22	115	0.70	0.35	0.35	1.73	349	89
153	207.70	220	0.36	12.30	115	0.71	0.35	0.35	1.73	359	90
154	207.62	222	0.36	12.38	115	0.71	0.36	0.36	1.72	360	90
155	207.53	223	0.35	12.46	115	0.72	0.36	0.36	1.72	362	90
156	207.45	219	0.35	12.55	115	0.72	0.36	0.36	1.71	353	90
157	207.37	209	0.37	12.63	115	0.73	0.36	0.36	1.71	337	88
158	207.29	199	0.40	12.71	115	0.73	0.37	0.37	1.70	320	87
159	207.21	194	0.42	12.79	115	0.74	0.37	0.37	1.70	311	86
160	207.12	190	0.45	12.87	115	0.74	0.37	0.37	1.69	303	86
161	207.04	186	0.48	12.96	115	0.75	0.37	0.37	1.69	297	85
210	203.02	184	0.68	16.98	115	0.98	0.50	0.48	1.49	258	81
211	202.94	183	0.68	17.06	115	0.98	0.50	0.48	1.48	257	81
212	202.86	181	0.67	17.14	115	0.99	0.50	0.48	1.48	253	81
213	202.78	176	0.67	17.22	115	0.99	0.51	0.48	1.48	245	80
214	202.70	169	0.68	17.30	115	1.00	0.51	0.49	1.47	236	79
215	202.61	164	0.70	17.39	115	1.00	0.51	0.49	1.47	228	78
216	202.53	161	0.74	17.47	115	1.00	0.51	0.49	1.47	223	77
217	202.45	162	0.76	17.55	115	1.01	0.52	0.49	1.47	224	78
218	202.37	167	0.77	17.63	115	1.01	0.52	0.50	1.46	231	78
219	202.29	171	0.78	17.71	115	1.02	0.52	0.50	1.46	235	79
220	202.20	177	0.77	17.80	115	1.02	0.52	0.50	1.46	243	80
221	202.12	179	0.75	17.88	115	1.03	0.53	0.50	1.45	246	80
222	202.04	180	0.76	17.96	115	1.03	0.53	0.50	1.45	246	80

D.4.3.3. Relative density can also be based on SPT blow count. Figure D.3 shows blow counts for an energy efficiency of 85 percent, with tabulated data in Table D.6. Detailed calculations will be presented for the test at elevation 212.5 ft.

Table D.6
Raw and Processed SPT Data on Natural Sand Below Elevation 215 ft.

El	19-251B	z	γ	σ_{v0}	u0	σ'_{v0}	C_E	C_B	C_R	C_S	N_{60}	C_N	$(N_1)_{60}$	D_R
(ft)	N_{85} (bpf)	(ft)	(pcf)	(tsf)	(tsf)	(tsf)						Calc.		(%)
212.5	18	7.5	115	0.43	0.20	0.23	1.42	1	0.75	1	19.1	2.15	32.5	81
207.5	22	12.5	115	0.72	0.36	0.36	1.42	1	0.75	1	23.4	1.71	39.7	89
202.5	21	17.5	115	1.01	0.51	0.49	1.42	1	0.85	1	25.3	1.47	37.1	86
197.5	19	22.5	115	1.29	0.67	0.62	1.42	1	0.95	1	25.6	1.30	33.3	82
192.5	20	27.5	115	1.58	0.83	0.75	1.42	1	0.95	1	26.9	1.18	31.9	80
187.5	24	32.5	115	1.87	0.98	0.89	1.42	1	0.95	1	32.3	1.09	35.3	84
182.5	22	37.5	115	2.16	1.14	1.02	1.42	1	1	1	31.2	1.02	31.8	80
177.5	27	42.5	115	2.44	1.29	1.15	1.42	1	1	1	38.3	0.96	36.7	86
172.5	28	47.5	115	2.73	1.45	1.28	1.42	1	1	1	39.7	0.91	36.1	85
167.5	29	52.5	115	3.02	1.61	1.41	1.42	1	1	1	41.1	0.87	35.6	84
162.5	36	57.5	115	3.31	1.76	1.54	1.42	1	1	1	51.0	0.83	42.2	92
157.5	34	62.5	115	3.59	1.92	1.67	1.42	1	1	1	48.2	0.79	38.3	88
152.5	30	67.5	115	3.88	2.07	1.81	1.42	1	1	1	42.5	0.77	32.5	81
147.5	29	72.5	115	4.17	2.23	1.94	1.42	1	1	1	41.1	0.74	30.4	78
142.5	32	77.5	115	4.46	2.39	2.07	1.42	1	1	1	45.3	0.72	32.4	81
137.5	45	82.5	115	4.74	2.54	2.20	1.42	1	1	1	63.8	0.69	44.2	94
132.5	49	87.5	115	5.03	2.70	2.33	1.42	1	1	1	69.4	0.67	46.8	97
127.5	64	92.5	115	5.32	2.85	2.46	1.42	1	1	1	90.7	0.66	59.4	109
122.5	31	97.5	115	5.61	3.01	2.60	1.42	1	1	1	43.9	0.64	28.0	75
117.5	48	102.5	115	5.89	3.17	2.73	1.42	1	1	1	68.0	0.62	42.4	92

D.4.3.3.1. Calculate the effective stress at the depth and water conditions which occurred during the boring. The ground surface was at an elevation of 220 ft. and the water table was 1 foot below that at elevation 219 ft. The elevation is 212.5 ft.

$$z = 220 \text{ ft} - 212.5 \text{ ft} = 7.5 \text{ ft}$$

$$\sigma_{v0} = 7.5 \text{ ft} \times 115 \text{ pcf} \times 1 \text{ tsf}/2000 \text{ psf} = 0.43 \text{ tsf}$$

$$u_0 = (219 \text{ ft} - 212.5 \text{ ft}) \times 62.4 \text{ pcf} \times 1 \text{ tsf}/2000 \text{ psf} = 0.20 \text{ tsf}$$

$$\sigma'_{v0} = 0.43 \text{ tsf} - 0.20 \text{ tsf} = 0.23 \text{ tsf}$$

D.4.3.3.2. Correct SPT N-value for procedural issues. Factors are presented in Youd & Idriss (2001).

$$N_{60} = N_m \cdot C_E \cdot C_B \cdot C_R \cdot C_S$$

Where:

N_m = the measured N-value

C_E = the energy correction to 60% efficiency = 85% divided by 60%

C_B = borehole diameter correction = 1 for borehole diameter of 2.5 to 4.5 in.

C_R = rod length correction = 0.75 for depths less than 13 ft.

C_S = sampler correction = 1 for a standard sampler

N_{60} = 18 bpf · 85/60 · 1 · 0.75 · 1 = 19.1 bpf

D.4.3.3.3. Calculate the effective stress correction factor, C_N.

C_N = an effective stress correction factor = $(p_a/\sigma'_{v0})^{0.5} \leq 1.7$

$p_a = \sigma_{atm}$ = a reference stress equal to atmospheric pressure, which depends on the units used for σ'_{v0} and q_t.

If σ'_{v0} or q_t are in tsf, use $p_a = \sigma_{atm}$ = 1.058 tsf,

If σ'_{v0} or q_t are in psf, use $p_a = \sigma_{atm}$ = 2116 psf,

If σ'_{v0} or q_t are in kPa, use $p_a = \sigma_{atm}$ = 101.3 kPa,

If σ'_{v0} or q_t are in MPa, use $p_a = \sigma_{atm}$ = 0.1013 MPa.

$C_N = (1.058 \text{ tsf} / 0.23 \text{ tsf})^{0.5} = 2.14 > 1.7$, so use 1.7

D.4.3.3.4. Calculate the effective stress normalized blow count.

$(N_1)_{60} = C_N \cdot N_{60}$

$(N_1)_{60} = 1.7 \cdot 19.1 = 32.5$

D.4.3.3.5. Calculate relative density based on blow count. The SPT relative density correlation described by Equation 2.15 in Kulhawy & Mayne (1990) is used in this example. A median grain size, D_{50}, of 0.4 is assumed.

D_R (%) = 100·sqrt[$(N_1)_{60}$/50] = 100·sqrt(32.5/50) = 81%

D.4.3.3.6. While relative density based on SPT is less than that based on the CPT at this depth, the soil is still characterized as very dense. Consistent interpretation of behavior would

result. Some difference between CPT and SPT relative density correlation results should be expected, indicating uncertainty in parameter evaluation.

D.4.3.4. Relative density profiles using CPT and SPT were developed based on the detailed calculations above and are shown in Figure D.7. A design friction angle is selected based on the following steps:

D.4.3.4.1. Select a design relative density. Constant soil properties are generally selected for the entire foundation because typical analysis software, such as CTWALL, do not allow layered profiles. The zone of influence for bearing capacity on sands can be roughly assumed as the effective footing width, which is unknown prior to design. An initial estimate of the footing width can be the height of soil support or flood protection, 25 ft. in this case.

D.4.3.4.2. A design relative density is selected based on the 1/3 – 2/3 rule. Checking the 1/3 – 2/3 rule for the zone of influence over a range of possible depths is less clear. An approach demonstrated by the middle plot in Figure D.7 is to count where data fall beneath an assumed relative density and express this fraction for each depth increment. Another approach demonstrated by the plot on the right in Figure D.7 is the cumulative of data that fall below an assumed relative density as a fraction of all data between that depth and the ground surface.

D.4.3.4.3. The check is shown for two possible design relative densities in Figure D.7, D_R of 80 percent and D_R of 70 percent. A D_R of 70 percent meets both the 1/3 – 2/3 rule at each depth and the cumulative 1/3 – 2/3 check to depths in excess of 25 ft. A D_R of 80 percent meets the cumulative 1/3 – 2/3 check to a depth of 25 ft., but exceeds the 1/3 – 2/3 rule at each depth for depths below 17 ft.

D.4.3.5. Based on Table 5.4, the design friction angle for D_R = 70% is 34 degrees and for D_R = 80% is 35 degrees. Due to the small differences in friction angle for the two design assumptions, the conservative selection with D_R = 70% and ϕ' = 34 degrees is selected for initial design. Updates of friction angle may be considered if:

D.4.3.5.1. Bearing controls rather than sliding.

D.4.3.5.2. The footing width is much less than 25 ft. (smaller footing zone of influence).

D.4.3.5.3. The inferred zone of influence is smaller due to a higher relative contribution of horizontal load (smaller footing zone due to effective width).

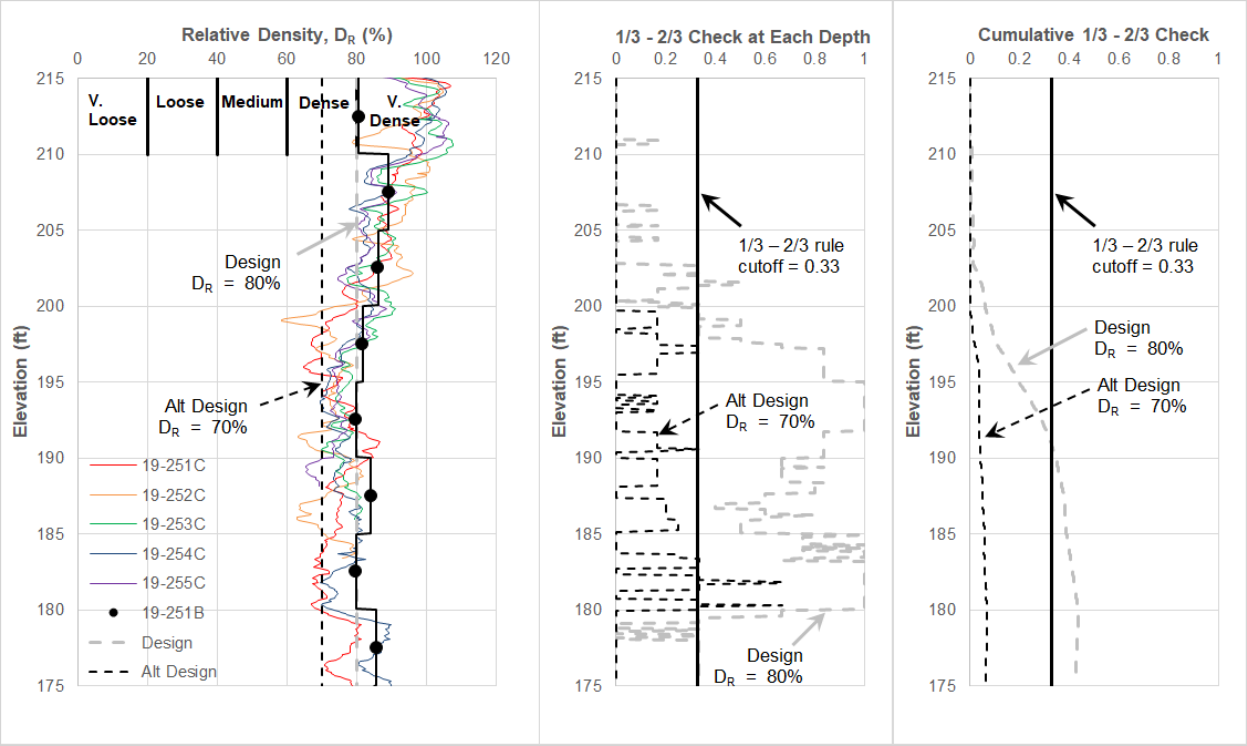

Figure D.7. Assessment of D_R Using 1/3 – 2/3 Rule for Selection of Design ϕ'

D.4.4. Design soil properties are summarized in Table D.7 and Figure D.8.

Table D.7
Soil Properties for Design

Soil Layer	Unit Weight (pcf)	Q Strength	S Strength	Other properties
Clay Fill	115	$s_u = c = 1{,}385$ psf $\phi = 0°$	$c' = 200$ psf, $\phi' = 20.5°$	
Alluvial Sand	115	N/A	$c' = 0$ psf, $\phi' = 34°$	

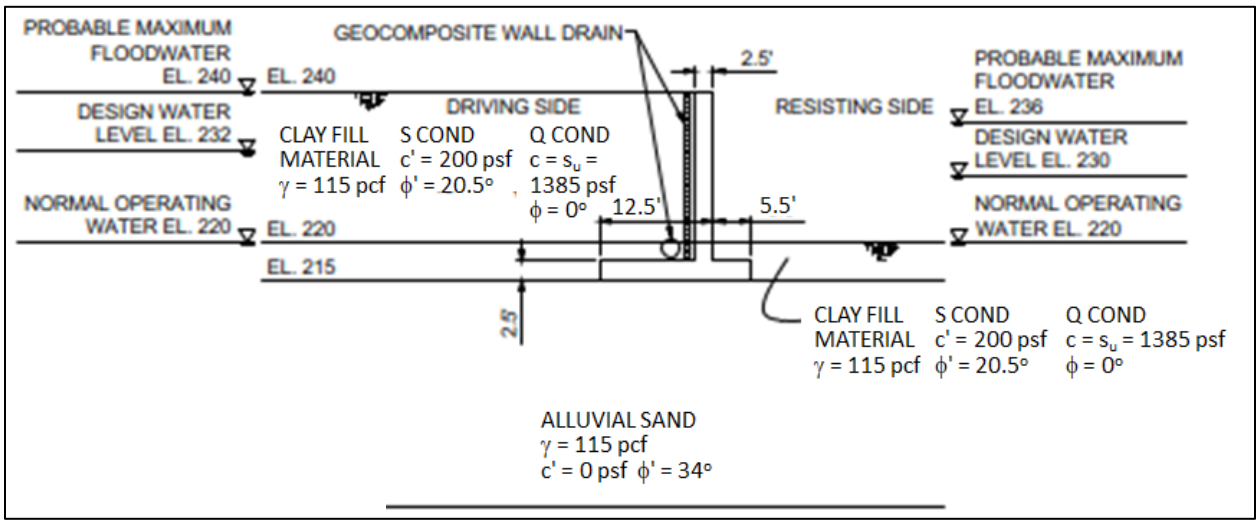

Figure D.8. Idealized Cross Section for Design

D.5. Site Information.

D.5.1. Site Information Category. The site information category is Ordinary. Design factors of safety will reflect this site information category. Geotechnical field explorations showed only small variations in the soil column throughout the project site. The T-wall is a new structure, and strata thicknesses and soil types were fairly consistent along the proposed wall alignment.

D.5.2. Topography and Bathymetry. A new survey provided sufficient topographic and bathymetric data to develop appropriate reach selections and analysis cross sections.

D.5.3. Geology. A geologic map assessment was performed at an earlier stage to determine the scope of the geotechnical field exploration and laboratory testing.

D.5.4. Reach Selection and Analysis Cross Sections. Based on the topography, bathymetry, hydraulic conditions, geology, soil layering and mechanical properties, the T-wall section of the flood control system was divided into appropriate reaches and analysis cross sections. Figure D.8 represents the design cross section for the T-wall.

D.5.5. Environmental. Corrosion testing, including pH measurement, electrical conductivity, and chloride and sulfate ion measurement, indicated that the soils and pore fluid are non-corrosive to concrete and metal. There are no known contaminants at the project site.

D.6. Loads. The T-wall is an earth retaining wall located along the bank of the Arkansas River. The T-wall will be subject to the following loads: Gravity, Hydrostatic and Groundwater, Earth Pressure, Surcharge, and Earthquake.

D.6.1. Gravity. The gravity load is the dead weight of the T-wall concrete and steel material. This is a usual, permanent load.

D.6.2. Hydrostatic and Groundwater. Hydrostatic and groundwater loads include water forces above and below ground and seepage forces. Various water elevations for the driving and resisting sides of the proposed T-wall were developed as a part of the planning process for the project and provided for design. The following water levels will be considered to determine hydrostatic and groundwater loads (shown in Figure D.8):

D.6.2.1. Normal Operating Level (NO) – Groundwater at elevation 220 ft. on driving side and at elevation 220 ft. on resisting side (usual, permanent load).

D.6.2.2. Design Water Level (DWL) – 100-year flood event causes groundwater elevation 232 ft. on driving side, with 2-foot drainage lag water elevation 230 ft. on resisting side (unusual, temporary load).

D.6.2.3. Probable Maximum Flood (PMF) – Flood water elevation 240 ft. on driving side, with completely saturated backfill water elevation 236 ft. on the resisting side (extreme, temporary load).

D.6.3. Earth Pressure. Lateral active and passive pressures are based on the developed soil parameters, which in turn are based on the design soil parameters (provided in Table D.7) modified by the appropriate factor of safety per this manual and EM 1110-2-2100. Earth pressures are calculated for the sliding, resultant location, and bearing analyses.

D.6.4. Surcharge. The surcharge load (SHG) is loading due to the weight of stockpiled material or maintenance equipment at the top of the earth fill on the driving side of the wall. The surcharge will be assumed to be 250 psf. This is an unusual, temporary load, and will be modeled in conjunction with the NO water levels.

D.6.5. Earthquake.

D.6.5.1. The project is located within a Moderate Seismic Hazard Region according to the Seismic Hazard Map included in ER 1110-2-1806. Using the shear wave velocity data collected from the field investigation, the site was found to meet the criteria of seismic Site Class D. The earthquake ground motions for the design and evaluation of the T-wall are the Operating Basis Earthquake (OBE) and the Maximum Design Earthquake (MDE). These ground motions represent return periods of 144 years and 1,000 years, respectively. Using the USGS Seismic Hazard Maps (2014 Dynamic), the peak ground acceleration for site class B/C is:

PGA = 0.027g for the OBE (144-year return period)

PGA = 0.126g for the MDE (1,000-year return period)

D.6.5.2. As shown in Figure D.3, the measured shear wave velocity for the site ranges between 600 and 1,000 ft/s. Therefore, according to Table 20.3-1 in ASCE 7-16, the site class is D. Table 20.3-1 is shown in Figure D.9 below.

Table 20.3-1 Site Classification

Site Class	$\bar{v}_s$	$\bar{N}$ or $\bar{N}_{ch}$	$\bar{s}_u$
A. Hard rock	>5,000 ft/s	NA	NA
B. Rock	2,500 to 5,000 ft/s	NA	NA
C. Very dense soil and soft rock	1,200 to 2,500 ft/s	>50	>2,000 psf
D. Stiff soil	600 to 1,200 ft/s	15 to 50	1,000 to 2,000 psf
E. Soft clay soil	<600 ft/s	<15	<1,000 psf
	Any profile with more than 10 ft of soil having the following characteristics: —Plasticity index $PI > 20$, —Moisture content $w \geq 40\%$, —Undrained shear strength $\bar{s}_u < 500$ psf		
F. Soils requiring site response analysis in accordance with Section 21.1	See Section 20.3.1		

For SI: 1 ft/s = 0.3048 m/s; 1 lb/ft^2 = 0.0479 kN/m^2.

Figure D.9. Table 20.3-1 Site Classification (ASCE 7-16)

D.6.5.3. The PGA based on site class B/C must be modified for the site conditions (site class D) based on Table 11.8-1 in ASCE 7-16, which is shown in Figure D.10 below.

TABLE 11.8-1 Site Coefficient F_{PGA}

	Mapped Maximum Considered Geometric Mean (MCE_G) Peak Ground Acceleration, PGA					
Site Class	PGA ≤ 0.1	PGA = 0.2	PGA = 0.3	PGA = 0.4	PGA = 0.5	PGA ≥ 0.6
A	0.8	0.8	0.8	0.8	0.8	0.8
B	0.9	0.9	0.9	0.9	0.9	0.9
C	1.3	1.2	1.2	1.2	1.2	1.2
D	1.6	1.4	1.3	1.2	1.1	1.1
E	2.4	1.9	1.6	1.4	1.2	1.1
F	See Section 11.4.8					

Note: Use straight-line interpolation for intermediate values of PGA.

Figure D.10. Table 11.8-1 Site Coefficient F_{PGA} (ASCE 7-16)

D.6.5.3.1. Using a straight-line interpolation, the site coefficients are:

F_{PGA} = 1.60 for the OBE

F_{PGA} = 1.55 for the MDE

D.6.5.3.2. Therefore, the PGAs modified for site conditions are:

PGA = 0.027g*1.6 = 0.043g for the OBE (144-year return period)

PGA = 0.126g*1.55 = 0.195g for the MDE (1,000-year return period)

D.6.5.4. According to section 6.9.6, the seismic coefficients for preliminary seismic stability analysis using the seismic coefficient method are the following:

D.6.5.4.1. Seismic Coefficient (OBE) = 2/3 PGA = 0.029

D.6.5.4.2. Seismic Coefficient (MDE) = 2/3 PGA = 0.130

D.6.5.5. Based on the required performance levels, the T-wall should be designed to be serviceable and operable immediately following an OBE event and not collapse under the MDE event. The appropriate hydraulic loading associated with the OBE and MDE is based on the normal pool water condition (NO), the elevation of which is at the ground surface on the resisting side, and 20 ft. below the ground surface on the driving side. Therefore, the T-wall will not be subjected to hydrodynamic loading. Seismic loadings will be incorporated into the sliding, resultant location, bearing, global stability, and liquefaction analyses.

D.6.6. Load Cases and Combinations. There are 6 load cases for the project: Normal Operating (NO) water level, Design Water Level (DWL), Probable Maximum Flood (PMF), Normal Operating water level with Surcharge (SHG), Operating Basis Earthquake (OBE), and Maximum Design Earthquake (MDE). Table D.8 lists the load case combinations.

Table D.8
Load Combinations for Soil-Founded T-Wall

Load Case	Load Description	Load Category	Load Combination
R1	Normal Operating (NO)	Usual	D + EH + EV + Hs
R2	Design Water Level (DWL)	Unusual	D + EH + EV + Hs
R3	Probable Maximum Flood (PMF)	Extreme	D + EH + EV + Hs
R4	Normal Operating with Surcharge (SHG)	Unusual	D + EH + EV + Hs + ES
R5	Operating Basis Earthquake (OBE)	Unusual	D + EH + EV + Hs + EQ
R6	Maximum Design Earthquake (MDE)	Extreme	D + EH + EV + Hs + EQ

D.6.6.1. Loading Condition R1. Normal Operating (NO) Water Level. Groundwater level at elevation 220 ft. on driving side and elevation 220 ft. on resisting side.

D.6.6.2. Loading Condition R2. Design Water Level (DWL). 100-year flood event causes groundwater level at elevation 232 ft. on driving side and flood water elevation 230 ft. on resisting side.

D.6.6.3. Loading Condition R3. Probable Maximum Flood (PMF). Groundwater level at ground surface elevation 240 ft. on driving side and flood water at elevation 236 ft. on resisting side.

D.6.6.4. Loading Condition R4. Normal Operating Water Level with Surcharge (SHG). Same as loading condition R1 but with 250 psf uniform surcharge on driving side due to material stockpile, machinery, and/or roadway.

D.6.6.5. Loading Condition R5. Operating Basis Earthquake (OBE). Groundwater condition same as Normal Operating case.

D.6.6.6. Loading Condition R6. Maximum Design Earthquake (MDE). Groundwater condition same as Normal Operating case.

D.7. Performance Models. General. The T-wall design includes the evaluation of the following eight performance modes: sliding stability, resultant location, bearing capacity, global stability, internal erosion, settlement, seismic performance, liquefaction, cyclic softening, and strength of structural elements. As required by this manual and EM 1110-2-2100, developed soil parameters were used to calculate lateral earth pressures for sliding, resultant location, and bearing capacity analyses.

D.8. Sliding Stability.

D.8.1. The sliding stability of the T-wall was analyzed to assess the safety of the structure against a potential failure due to excessive horizontal deformations. The USACE CASE program CTWALL-R (Version 1.0) was used to evaluate sliding stability for the static load cases R1 through R4. CTWALL-R uses an iterative limit equilibrium procedure to determine the critical driving and resisting wedge angles. The program incorporates developed soil parameters for the lateral earth pressures through the strength mobilization factor (SMF), which is the inverse of the factor of safety.

D.8.2. The interface friction angle ($\delta = 28°$) was used for sliding resistance between the base and foundation soil according to Table 6.2. Table D.9 shows the results of the CTWALL-R analyses. The minimum required factors of safety are according to EM 1110-2-2100 for normal structures.

Table D.9
Results of Sliding Stability Analysis

Load Case	Load Description	Load Category	Driving Side Water Elevation (ft)	Resisting Side Water Elevation (ft)	Shear Strength	Minimum Required Factor of Safety	Calculated Factor of Safety[1]
R1	Normal Operating (NO)	Usual	220	220	Undrained, Q	1.5	2.4
					Drained, S		1.6
R2	Design Water Level (DWL)	Unusual	232	230	Undrained, Q	1.3	2.8
					Drained, S		1.6
R3	Probable Maximum Flood (PMF)	Extreme	240	236	Undrained, Q	1.1	5.4
					Drained, S		1.6
R4	Surcharge (SHG)	Unusual	220	220	Undrained, Q	1.3	2.5
					Drained, S		1.5
R5	Operating Basis Earthquake (OBE)	Unusual	220	220	Undrained, Q	1.3	[2]
					Drained, S		1.7
R6	Maximum Design Earthquake (MDE)	Extreme	220	220	Undrained, Q	1.1	[2]
					Drained, S		1.25

1. CTWALL-R was used to compute sliding factor of safety for static load cases R1 through R4. Hand calculations were used to calculate sliding factor of safety for the earthquake load cases R5 and R6.
2. Cohesion (tension) in backfill would reduce driving forces while foundation shear strength remains the same for Undrained and Drained cases. Undrained case assessed to not govern. Section 6.9.7 provides methods for calculating seismic active pressures with cohesive soils.

D.8.3. The following are the CTWALL-R inputs, outputs, and graphics from the R1-NO drained (S) load case.

D.8.3.1. CTWALL-R Input:

```
**********************
 **  Sliding Results  **
 **********************

 Solution converged.  Summation of forces = 0.

            Horizontal   Vertical
  Wedge       Loads
  Number     (kips)       (kips)
  ==================================
     1        0.245       0.000
     2        0.000       0.000
     3        0.000       0.000

  Water pressures on wedges:

             Top       Bottom
    Wedge    press.    press.    x-coord.     press.
    number   (ksf)     (ksf)      (ft)        (ksf)
  ================================================
       1    0.0000     0.3120
```

```
      2                          0.0000     0.3120
      2                         20.5000     0.3120
      3    0.0000    0.3120

Points of sliding plane:
  Point 1 (left),  x =     0.00 ft,   y =     0.00 ft
  Point 2 (right), x =    20.50 ft,   y =     0.00 ft

Depth of cracking =     2.80 ft

          Failure   Total    Weight    Submerged   Uplift
  Wedge    angle    length  of wedge    length     force
  number   (deg)     (ft)     (kips)     (ft)      (kips)
  ============================================================
     1   -51.683    28.292     28.042    6.373     0.994
     2     0.000    20.500     50.050   20.500     6.396
     3    38.340     8.060      1.818    8.060     1.257

  Wedge     Net force
  number     (kips)
  ===================
     1      -18.218
     2       14.773
     3        3.445
  ===================
     SUM =    0.000

+-----------------------------+
| Factor of safety =    1.571 |
+-----------------------------+
```

D.8.3.2. The failure surface from CTWALL-R is shown in Figure D.11.

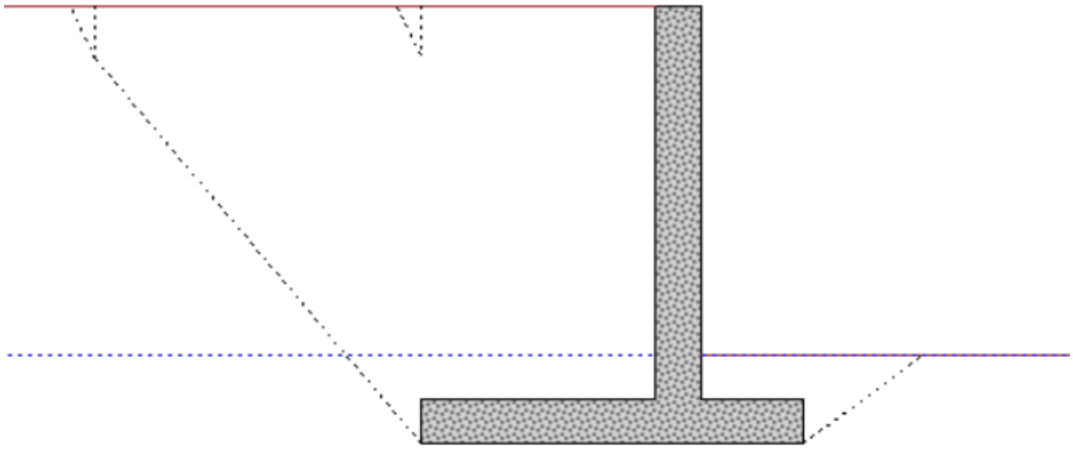

Figure D.11. CT-Wall Failure Surface

D.8.4. Hand calculations of sliding stability for Load Case R1 follow. Figure D.12 shows wall pressures used for the sliding and overturning analyses.

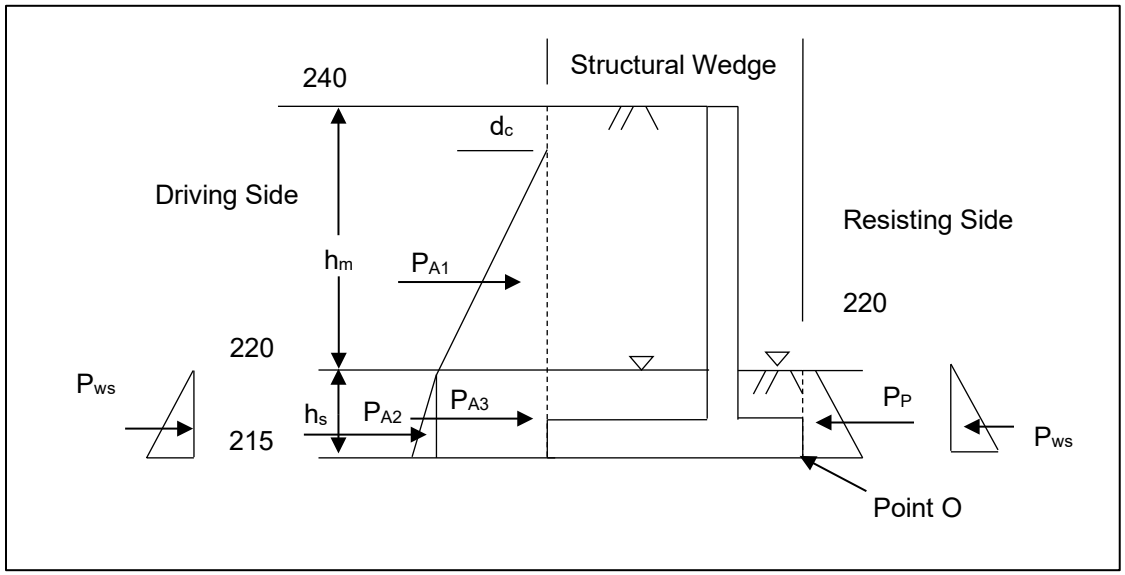

Figure D.12. Lateral Forces for Sliding and Overturning Analysis

D.8.5. The following is the equation for the factor of safety against sliding using the single wedge method from Equation 7.1:

$$FS_s = \frac{N' \tan\delta + \frac{C_a}{c'} \cdot c' L}{T} \qquad \text{(Equation 7.1)}$$

Where:

N' = resultant force component normal to base

δ = interface friction angle between base and foundation soil (29 degrees)

C_a = Adhesion (0)

c' = cohesive strength of foundation soil below base (0)

L = length of base in compression (20 ft. with 100 percent of the base in compression)

T = resultant force component parallel to base

D.8.5.1. Resultant Vertical Forces:

$$N' = W_s + W_c + U$$

$$W_s = 115pcf(12.5' \times 22.5' + 5.5' \times 2.5') = 32{,}344 + 1{,}581 = 33{,}925lb$$

$$W_c = 150pcf(2.5' \times 20.5' + 2.5' \times 22.5') = 7{,}688 + 8{,}438 = 16{,}125lb$$

$$U = -62.4pcf \times 5' \times 20.5' = -6{,}396lb$$

$$N' = 33{,}925 + 16{,}125 - 6{,}396 = 43{,}654lb$$

D.8.5.2. Lateral Earth Pressures:

D.8.5.2.1. Soil back fill has a drained shear strength = 20.5 degrees with an effective cohesion of 200 pcf.

D.8.5.2.2. Compute developed shear strength parameters using the required minimum FS_s = 1.5 using equations 6.14 and 6.17.

$$c'_d = \frac{c'}{FS_S} = \frac{200}{1.5} = 133\ psf \qquad \text{(Equation 6.14)}$$

$$\phi_d = tan^{-1}\left(\frac{tan\phi}{FS_S}\right) = tan^{-1}\left(\frac{tan20.5^\circ}{1.5}\right) = 14^\circ \qquad \text{(Equation 6.17)}$$

D.8.5.3. Active pressures on the driving side of the wall. Pressures are computed at the soil to soil interface along a vertical line at the back of the heel. With horizontal ground surfaces Coulomb's equation may be used according to EM 1110-2-2100. There will be no friction or adhesion along the soil to soil interface between the structural wedge and the driving and resisting wedges ($\delta = 0$ and $C_a = 0$).

D.8.5.3.1. The lateral earth pressure coefficient, K_A is:

$$K_A = \frac{1 - sin\phi'_d}{1 + sin\phi'_d} = \frac{1 - \sin 14^\circ}{1 + \sin 14^\circ} = 0.61$$

D.8.5.3.2. Compute crack depth using Equation 6.2.

$$d_c = \frac{2c'_d}{\gamma'\sqrt{K_A}} = \frac{2(133\ psf)}{115\ pcf\sqrt{0.61}} = 3.0\ ft \qquad \text{(Equation 6.2)}$$

D.8.5.3.3. The earth pressure from the moist soil at the top of the water table is:

$$p'_{am} = \gamma' z\, K_A - 2c'_d \sqrt{K_A\left(1 + \frac{C_a}{c'}\right)}$$

$$= 115\ pcf\ (240' - 220')(0.61) - 2(133\ psf)\sqrt{0.61\left(1 + \frac{0}{133}\right)} = 1{,}195\ psf$$

D.8.5.3.4. The earth pressure increase from the top of the water table to the bottom of footing in the saturated soil is:

$$p'_{as} = \gamma' h_s \, K_A = (115\, pcf - 62.4\, pcf)(5')0.61 = 160\, psf$$

D.8.5.3.5. The individual lateral earth pressures on the driving side from Figure D.12:

$$P_{A1} = \frac{(h_m - d_c)p'_{am}}{2} = \frac{(20' - 3')(1{,}195\, psf)}{2} = 10{,}158\, lb$$

$$P_{A2} = \frac{h_s\, p'_{as}}{2} = \frac{5'(160\, psf)}{2} = 400\, lb$$

$$P_{A3} = h_s\, p'_{am} = 5'(1{,}195 psf) = 5{,}975\, lb$$

D.8.5.4. Passive earth pressures (K_P) on the resisting side of the wall. With flat ground and no wall adhesion (along the soil to soil interface) Coulomb's equation will be used to compute K_P.

D.8.5.4.1. The lateral earth pressure coefficient, K_P is:

$$K_P = \frac{1 + sin\phi'_d}{1 - sin\phi'_d} = \frac{1 + \sin 14°}{1 - \sin 14°} = 1.64$$

D.8.5.4.2. The earth pressure at the top of the ground (z = 0) is:

$$p'_{pt} = \gamma' z\, K_P + \, 2c'_d \sqrt{K_P\left(1 + \frac{C_a}{c'}\right)} = 2(133\, psf)\sqrt{1.64\left(1 + \frac{0}{133}\right)} = 341\, psf$$

D.8.5.4.3. The earth pressure at the bottom of the footing is:

$$p'_{pb} = \gamma' z\, K_P + \, 2c'_d \sqrt{K_P\left(1 + \frac{C_a}{c'}\right)}$$
$$= (115\, pcf - 62.4\, pcf)(220' - 215')(1.64) + 2(133\, psf)\sqrt{1.64} = 772\, psf$$

D.8.5.4.4. The earth pressure diagram is a trapezoid, and the total resisting passive pressure is:

$$P_P = \frac{\left(p'_{pt} + p'_{pb}\right)}{2} H_s = \frac{(341\, psf + 772\, psf)}{2}(5ft) = 2{,}783\, lb$$

D.8.5.5. Lateral Water Pressure.

D.8.5.5.1. Driving side water force and resisting side water forces are the same because the water level is the same on both sides. Because of this no seepage will take place and water forces are hydrostatic. The water force on each side is:

$$P_{ws} = \frac{62.4\ pcf(5)^2}{2} = 780\ psf$$

D.8.5.5.2. The sum of horizontal forces, T, =

$$T = P_{A1} + P_{A2} + P_{A3} + P_{ws} - P_P - P_{ws}$$
$$= 10{,}158\ lb + 400\ lb + 5{,}975\ lb + 780\ lb - 2{,}783\ lb - 780\ lb = 13{,}750 lb$$

D.8.5.6. Computed sliding factor of safety.

$$FS_S = \frac{N tan\phi + cL}{T} = \frac{43{,}654\ lb \tan 28° + 0}{13{,}750\ lb} = 1.69$$

D.8.5.7. Because the factor of safety is greater than the minimum required factor of safety the design is adequate. The factor of safety computed here cannot be directly compared with the factor of safety provided by CTWALL-R since it was computed with a factor of safety of 1.5 on the earth pressures. The factor of safety computed by the single wedge analysis is correct when the factor of safety used to compute the developed soil strengths is the same as FS_s. Doing this would nearly match the CTWALL-R results.

D.8.6. Earthquake.

D.8.6.1. CTWALL-R is unable to run analyses for earthquake loading. The seismic coefficient method was used to analyze sliding stability of the T-wall under earthquake loading according to this manual and EM 1110-2-2100, Appendix G. The numerator is the sliding resistance and, for this example, consists only of the frictional component as there is no cohesion term for the concrete-sand interface resistance. The normal force N′ is the algebraic sum of the structural wedge weight and the hydrostatic uplift force. The denominator of the sliding FS equation is the driving shear force, T. Figure D.13 shows the forces on the structure.

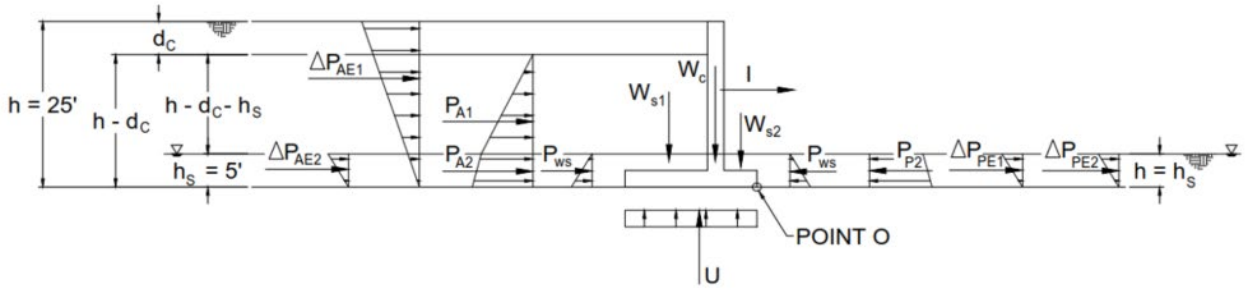

Figure D.13. Pressure and Force Free Body Diagram – Earthquake Loading

D.8.6.2. The T-wall is able to yield laterally, and the backfill is a cohesive material, so earth forces can be calculated using the multiple wedge analysis method per EM 1110-2-2100, Appendix G. The driving shear force consists of the algebraic sum of the driving earth and

inertial forces and resisting earth forces. Developed soil parameters are used for the friction angle (ϕ'_d) and cohesive strength (c'_d), as follows for the MDE load:

$$\phi'_d = tan^{-1}\left(\frac{tan\phi}{FS_S}\right) = tan^{-1}\left(\frac{tan20.5°}{1.1}\right) = 18.8°$$

$$c'_d = \frac{c}{FS_S} = \frac{200psf}{1.1} = 182psf$$

Seismic Coefficient = k_h = 0.13 (paragraph D.6.5.4.2)

D.8.6.3. Driving Earth (P_{AE}) and Inertial Forces (I).

$$P_{AE} = P_A + P_{ws} + \Delta P_{AE}$$

$$I = k_h(W_s + W_c)$$

$$P_A = P_{A1} + P_{A2} = \frac{1}{2}K_A\gamma[(h - d_c) - h_s]^2 + \frac{1}{2}h_s[2K_A\gamma(h - d_c - h_s) + K_b\gamma_b h_s]$$

$$P_{ws} = \frac{1}{2}\gamma_w h_s^2$$

$$\Delta P_{AE} = \Delta P_{AE1} + \Delta P_{AE2} = k_h\left[\frac{\gamma(h^2 - d_c^2)}{2(tan\alpha - tan\beta)}\right] + k_h\left[\frac{(\gamma_s - \gamma)^2 h_s^2}{2tan\alpha}\right]$$

$$K_A = \left(\frac{1 - tan\phi'_d cot\alpha}{1 + tan\phi'_d tan\alpha}\right)\left(\frac{tan\alpha}{tan\alpha - tan\beta}\right)$$

$$K_b = \left(\frac{1 - tan\phi'_d cot\alpha}{1 + tan\phi'_d tan\alpha}\right)\left[1 + \left(\frac{tan\alpha}{tan\alpha - tan\beta} - 1\right)\frac{\gamma}{\gamma_b}\right]$$

$$\alpha = tan^{-1}\left(\frac{c_1 + \sqrt{c_1^2 + 4c_2}}{2}\right)$$

$$c_1 = \frac{2tan\phi'_d(tan\phi'_d - k_h) + \frac{4c_d(tan\phi'_d + tan\beta)}{\gamma(h + d_c)}}{A}$$

$$c_2 = \frac{tan\phi'_d(1 - tan\phi'_d tan\beta) - (tan\beta + k_h) + \frac{2c'_d(1 - tan\phi'_d tan\beta)}{\gamma(h + d_c)}}{A}$$

$$A = (1 + k_h tan\phi'_d)tan\phi'_d + \frac{2c'_d(1 - tan\phi'_d tan\beta)}{\gamma(h + d_c)}$$

$$d_c = \frac{c'_d/\gamma}{cos\alpha(sin\alpha - tan\phi'_d cos\alpha)}$$

D.8.6.4. The following shows the driving force results for the MDE loading. A spreadsheet was used to iterate and solve for the parameters dc, A, c1, c2, and α:

$$\alpha = tan^{-1}\left(\frac{0.466 + \sqrt{(0.466)^2 + 4 \times 0.685}}{2}\right) = 47.54°$$

$$A = (1 + 0.13tan18.8°)tan18.8° + \frac{2 \times 182psf(1 - tan18.8°tan0°)}{115pcf(25' + 4.61')} = 0.462$$

$$c_1 = \frac{2tan18.8°(tan18.8° - 0.13) + \frac{4 \times 182psf(tan18.8° + tan0°)}{115pcf(25' + 4.61')}}{0.462} = 0.466$$

$$c_2 = \frac{tan18.8°(1 - tan18.8°tan0°) - (tan0° + 0.13) + \frac{2 \times 182psf(1 - tan18.8°tan0°)}{115pcf(25' + 4.61')}}{0.462} = 0.685$$

$$d_c = \frac{182psf/115pcf}{cos47.56°(sin47.54° - tan18.8°cos47.54°)} = 4.61'$$

$$K_A = \left(\frac{1 - tan18.8°cot47.54°}{1 + tan18.8°tan47.54°}\right)\left(\frac{tan47.54°}{tan47.56° - tan0°}\right) = 0.50$$

$$K_b = \left(\frac{1 - tan18.8°cot47.54°}{1 + tan18.8°tan47.54°}\right)\left[1 + \left(\frac{tan47.54°}{tan47.54° - tan0°} - 1\right)\frac{115pcf}{(115 - 62.4)pcf}\right] = 0.50$$

$$P_{A1} = \frac{1}{2} \times 0.50 \times 115pcf[(25' - 4.61) - 5']^2 = 6{,}809b$$

$$P_{A2} = \frac{1}{2} \times 5' \times [2 \times 0.50 \times 115pcf(25' - 4.61' - 5') + 0.50 \times (115 - 62.4)pcf \times 5'] = 4{,}753lb$$

$$P_A = P_{A1} + P_{A2} = 6{,}809 + 4{,}753 = 11{,}562lb$$

$$P_{ws} = \frac{1}{2} \times 62.4pcf \times (5')^2 = 780lb$$

$$\Delta P_{AE1} = 0.13\left[\frac{115pcf\left(25'^2 - 4.61'^2\right)}{2(tan47.54° - tan0°)}\right] = 4{,}130pcf$$

$$\Delta P_{AE2} = 0.13\left[\frac{(115pcf - 115pcf)^2(4.61')^2}{2tan47.54°}\right] = 0pcf$$

$$\Delta P_{AE} = \Delta P_{AE1} + \Delta P_{AE2} = 4{,}130 + 0 = 4{,}130lb$$

$$P_{AE} = P_A + P_{ws} + \Delta P_{AE} = 11{,}562 + 780 + 4{,}130 = 16{,}472lb$$

$$I = k_h(W_s + W_c) = 0.13(33{,}925lb + 16{,}125lb) = 6{,}507lb$$

The total driving forces are:

$$P_{AE} + I = 16{,}472 + 6{,}507 = 22{,}979lb$$

D.8.6.5. Resisting Earth Forces.

$$P_{PE} = P_P + P_{ws} + \Delta P_{PE}$$

$$P_P = P_{P1} + P_{P2} = \frac{1}{2}K_P\gamma(h - h_s)^2 + \frac{1}{2}h_s[2K_P\gamma(h - h_s) + K_b\gamma_b h_s] + 2K_c ch$$

$$P_{ws} = \frac{1}{2}\gamma_w h_s^2$$

$$\Delta P_{PE} = \Delta P_{PE1} + \Delta P_{PE2} = k_h\left[\frac{\gamma h^2}{2(tan\alpha - tan\beta)}\right] + k_h\left[\frac{(\gamma_s - \gamma)h_s^2}{2tan\alpha}\right]$$

$$K_P = \left(\frac{1 + tan\phi'_d cot\alpha}{1 - tan\phi'_d tan\alpha}\right)\left(\frac{tan\alpha}{tan\alpha - tan\beta}\right)$$

$$K_b = \left(\frac{1 + tan\phi'_d cot\alpha}{1 - tan\phi'_d tan\alpha}\right)\left[1 + \left(\frac{tan\alpha}{tan\alpha - tan\beta} - 1\right)\frac{\gamma}{\gamma_b}\right]$$

$$\alpha = tan^{-1}\left(\frac{-c_1 + \sqrt{c_1^2 + 4c_2}}{2}\right)$$

$$c_1 = \frac{2tan\phi'_d(tan\phi'_d - k_h) + \frac{4c_d(tan\phi'_d - tan\beta)}{\gamma h}}{A}$$

$$c_2 = \frac{tan\phi'_d(1 + tan\phi'_d tan\beta) + (tan\beta - k_h) + \frac{2c'_d(1 + tan\phi'_d tan\beta)}{\gamma h}}{A}$$

$$A = (1 + k_h tan\phi'_d)tan\phi'_d + \frac{2c'_d(1 + tan\phi'_d tan\beta)}{\gamma h}$$

$$K_c = \frac{1}{2sin\alpha cos\alpha(1 - tan\phi'_d cos\alpha)} \cdot \frac{tan\alpha}{tan\alpha - tan\beta}$$

D.8.6.6. The following shows the resisting force results for the MDE loading. A spreadsheet was used to iterate and solve for the parameters α, A, c1, c2, and Kc:

$$A = (1 + 0.13tan18.8°)tan18.8° + \frac{2 \times 182psf(1 + tan18.8°tan0°)}{115pcf(5')} = 0.989$$

$$c_1 = \frac{2tan18.8°(tan18.8° - 0.13) + \frac{4 \times 182psf(tan18.8° - tan0°)}{115pcf(5')}}{0.989} = 0.580$$

$$c_2 = \frac{tan18.8°(1 + tan18.8°tan0°) + (tan0° - 0.13) + \frac{2 \times 182psf(1 + tan18.8°tan0°)}{115pcf(5')}}{0.989}$$
$$= 0.853$$

$$\alpha = tan^{-1}\left(\frac{-0.580 + \sqrt{(0.580)^2 + 4 \times 0.853}}{2}\right) = 34.14°$$

$$K_c = \frac{1}{2sin34.14°cos34.14°(1 - tan18.8°cos34.14°)} \cdot \frac{tan34.14°}{tan34.14° - tan0°} = 1.50$$

$$K_P = \left(\frac{1 + tan18.8°cot34.14°}{1 - tan18.8°tan34.14°}\right)\left(\frac{tan34.14°}{tan34.14° - tan0°}\right) = 1.95$$

$$K_b = \left(\frac{1 + tan18.8°cot34.14°}{1 - tan18.8°tan34.14°}\right)\left[1 + \left(\frac{tan34.14°}{tan34.14° - tan0°} - 1\right)\frac{115pcf}{(115 - 62.4)pcf}\right] = 1.95$$

$$P_{P1} = \frac{1}{2} \times 1.95 \times 115pcf(5' - 5')^2 = 0lb$$

$$P_{P2} = \frac{1}{2} \times 5' \times [2 \times 1.95 \times 115pcf(5' - 5') + 1.95 \times (115 - 62.4)pcf \times 5'] +$$
$$2 \times 1.50 \times 182psf \times 5' = 4{,}012lb$$

$$P_P = P_{P1} + P_{P2} = 0 + 4{,}012 = 4{,}012lb$$

$$P_{ws} = \frac{1}{2} \times 62.4pcf \times (5')^2 = 780lb$$

$$\Delta P_{PE1} = -0.13\left[\frac{115pcf(5')^2}{2(tan34.14° - tan0°)}\right] = -276pcf$$

$$\Delta P_{PE2} = -0.13\left[\frac{(115pcf - 115pcf)^2(5')^2}{2tan34.14°}\right] = 0pcf$$

$$\Delta P_{PE} = \Delta P_{AE1} + \Delta P_{AE2} = -276 + 0 = -276lb$$

$$P_{PE} = P_P + P_{ws} + \Delta P_{AE} = 4{,}012 + 780 - 276 = 4{,}516lb$$

The total resisting earth force is:

$$P_{PE} = 5{,}763lb$$

D.8.6.7. The factor of safety against sliding for the MDE loading is:

$$FS_S = \frac{Ntan\phi + cL}{T} = \frac{43{,}654tan28°lb + 0lb}{22{,}979lb - 4{,}516lb} = \frac{23{,}211lb}{18{,}463lb} = 1.25$$

Using the same calculation method (not shown), the factor of safety against sliding for the OBE loading is:

$$FS_S = \frac{Ntan\phi + cL}{T} = \frac{43{,}654tan28°lb + 0lb}{17{,}572lb - 3{,}974lb} = \frac{23{,}211lb}{13{,}598lb} = 1.71$$

D.8.6.8. The foregoing sliding factors of safety calculations assume that the base is in 100 percent compression. Table D.9 summarizes the sliding factor of safety for the earthquake loading cases and indicates that the minimum required factors of safety against sliding are met for all cases.

D.9. Resultant Location.

D.9.1. The resultant location of the T-wall was analyzed to ensure that the structure is safe from rotational failure. The USACE CASE program CTWALL-R (Version 1.0) was used to evaluate resultant location for the static load cases, according to this manual and EM 1110-2-2100. For cases with usual load categories, the resultant must fall inside the middle third of the base. For cases with unusual and extreme load categories, the resultant can fall outside the middle third of the base. However, for the unusual category, 75 percent of the base

must be in compression, and for the extreme category, the resultant must fall within the base somewhere.

D.9.2. CTWALL-R incorporates developed soil parameters for active pressure through strength mobilization factors (SMF), which are the inverse of the factor of safety. At-rest pressures with undeveloped soil parameters were used on the resisting side of the wall per guidance in this manual. Table D.10 summarizes the CTWALL-R resultant location results.

Table D.10
Results of Resultant Location Analysis Using CTWALL-R

Load Case	Load Description	Load Category	Driving Side Water Elevation (ft)	Resisting Side Water Elevation (ft)	Min. Resultant Location[1] (ft)	Resultant Location, Xr[1] (ft)		Base in Compression[2] (%)	
						Undrained Q	Drained S	Undrained Q	Drained S
R1	Normal Operating (NO)	Usual	220	220	6.7	9.3	9.3	100	100
R2	Design Water Level (DWL)	Unusual	232	230	5.0	9.4	9.0	100	100
R3	Probable Maximum Flood (PMF)	Extreme	240	236	–	9.3	8.5	100	100
R4	Surcharge (SHG)	Unusual	220	220	5.0	10.8	9.3	100	100
R5	Operating Basis Earthquake (OBE)	Unusual	220	220	5.0	[3]	7.3	[3]	100
R6	Maximum Design Earthquake (MDE)	Extreme	220	220	–	[3]	9.3	[3]	100

1. Measured from Toe.
2. The required Base in Compression is 100 percent for Usual and 75 percent for Unusual Load Categories. For Extreme Load Categories, the Resultant Location must be in the base.
3. Cohesion (tension) in backfill would reduce driving forces while foundation shear strength remains the same for Undrained and Drained cases. Undrained case assessed to not govern. Section 6.9.7 provides methods for calculating seismic active pressures with cohesive soils.

D.9.3. The following are the CTWALL-R outputs and graphics from the R1-NO drained (S) load case. The input was provided in the sliding analysis.

CTWALL-R Resultant Location Output:

```
**************************
**  Overturning Results  **
**************************

Solution converged in 1 iterations.

SMF used to calculate K's =   0.6667
Alpha for the SMF         = -51.9962
Calculated earth pressure coefficients:
  Driving side at rest K    =   0.6105
  Driving side at rest Kc   =   0.7813
  Resisting side at rest K  =   0.6498
  Resisting side at rest Kc =   0.8061
  At-rest K's for resisting side calculated.

Depth of cracking =     2.97 ft

** Driving side pressures **

  Water pressures:
    Elevation   Pressure
      (ft)       (ksf)
    ======================
        25.00     0.0000
        22.03     0.1852
        22.03     0.0001
         5.00     0.0001
         0.00     0.3120

  Earth pressures:
    Elevation   Pressure
      (ft)       (ksf)
    ======================
        25.00     0.0000
        22.03     0.0000
         5.00     1.1958
         0.00     1.3563

** Resisting side pressures **

  Water pressures:
    Elevation   Pressure
      (ft)       (ksf)
    ======================
         5.00     0.0000
         0.00     0.3120

  Earth pressures:
    Elevation   Pressure
      (ft)       (ksf)
    ======================
         5.00     0.0000
         0.00     0.1709

** Uplift pressures **

  Water pressures:
     x-coord.   Pressure
       (ft)      (ksf)
    ======================
         0.00     0.3120
        20.50     0.3120
```

```
** Forces and moments **

================================================================================
              Part          |    Force (kips)    | Mom.  Arm  |  Moment |
                            |  Vert.   |   Horiz.|    (ft)  |  (ft-k) |
================================================================================
Structure:
  Structure weight.....   16.125                  -8.42   -135.75
Structure, driving side:
  Moist soil.............   28.750               -14.25   -409.69
  Saturated soil.........    3.594               -14.25    -51.21
  Water above structure..... 0.000                 0.00      0.00
  Water above soil.......... 0.000                 0.00      0.00
  External vertical loads.... 0.000                0.00      0.00
  Ext. horz. pressure loads..              0.000     0.00      0.00
  Ext. horz. line loads.....               0.000     0.00      0.00
Structure, resisting side:
  Moist soil.............    0.000                  0.00      0.00
  Saturated soil.........    1.581                 -2.75     -4.35
  Water above structure..... 0.000                 0.00      0.00
  Water above soil.......... 0.000                 0.00      0.00
Driving side:
  Effective earth loads.....              16.564     7.51    124.35
  Shear (due to delta).....  0.000                  0.00      0.00
  Horiz. surcharge effects...              0.000     0.00      0.00
  Water loads.............                 1.057     7.24      7.65
Resisting side:
  Effective earth loads.....              -0.427     1.67     -0.71
  Water loads.............                -0.780     1.67     -1.30
Foundation:
  Vertical force on base.....  -43.654               -9.29    405.45
  Shear on base.............             -16.413     0.00      0.00
  Uplift.....................  -6.396               -10.25     65.56
================================================================================
** Statics Check **   SUMS =     0.000      0.000                 0.00

Angle of base        =     0.00 degrees
Normal force on base =   43.654 kips
Shear force on base  =   16.413 kips
Max. available shear force =   23.211 kips

Base pressure at heel =   1.5298 ksf
Base pressure at toe  =   2.7291 ksf

Xr (measured from toe) =     9.29 ft
Resultant ratio        =   0.4531
Stem ratio             =   0.2683
Base in compression    =   100.00 %
Overturning ratio      =     3.05

Volume of concrete =     3.98 cubic yds/ft of wall.
```

D.9.4. Hand Calculations.

D.9.4.1. Hand calculations of the location of resultant for Load Case R1 follow. Figure D.12 shows wall pressures used for the overturning analyses. The following is the equation for the resultant location from Equation 7.2:

$$x_R = \frac{\sum M_O}{N'} \qquad \text{(Equation 7.2)}$$

Where:

$\sum M_O =$ summation of moments about Point O. Point O is at the toe of the wall as shown in Figure D.12.

N' = resultant base force = 43,479 lb from sliding calculations.

D.9.4.2. For computation of the sum of the moments, the forces were computed in the sliding stability analysis. Per EM 1110-2-2104, these pressures are used for the overturning analysis. The driving forces are determined based on the required factor of safety and roughly correlate to the amount of movement expected. For resisting forces, full passive pressure would not be expected to occur, since movements required to develop it are significant and the actual sliding factor of safety is greater than the minimum design factor of safety. Therefore, at-rest pressures will be used for the resisting pressures, as is done in CTWALL. Using the Equation 6.9:

$$K_0 = 1 - \sin\phi' = 1 - \sin 20.5 = 0.65 \qquad \text{(Equation 6.9)}$$

D.9.4.2.1. The effective resisting soil pressure will then be a triangle with pressure at the bottom equal to:

$$p'_0 = K_0\gamma' H_s = (0.65)(115\,pcf - 62.4\,pcf)(5') = 170\,psf$$

D.9.4.2.2. The total at-rest resisting force is:

$$P_0 = \frac{(170\,psf)(5')}{2} = 425\,lb$$

D.9.4.3. The computation of the moments is most easily presented in a table form (Tables D.11 and D.12), as used in CTWALL. Below are tables with the vertical and horizontal forces with moments positive when counterclockwise about point O. The forces are as calculated previously. The moment arms in the table should be straightforward. The arm for P_{A1} was calculated by:

$$\text{Arm } P_{A1} = h_s + \frac{(h_m - d_c)}{3} = 5ft. + \frac{(20ft - 3.0ft)}{3} = 10.67 \text{ ft}$$

Table D.11
Summation of Vertical Forces

Vertical Forces			
	Force, lb	Arm, ft	Moment, lb-ft
Stem	8,438	6.75	56,957
Base	7,688	10.25	78,802
Soil on Heel	32,344	14.25	460,902
Soil on Toe	1,581	2.75	4,348
Uplift	-6,396	10.25	-65,559
Total, N'	43,654	12.27	535,450

Table D.12
Summation of Horizontal Forces

Horizontal Forces			
	Force, lb	Arm, ft	Moment, lb-ft
P_{A1}	-10,158	10.67	-108,386
P_{A2}	-400	1.7	-680
P_{A3}	-5,975	2.5	-14,938
P_{WS} D	-780	1.7	-1,326
P_0	425	1.7	723
P_{WS} R	780	1.7	1,326
Total	-15,648	8.9	-123,281

Therefore:

$$x_R = \frac{\sum M_O}{N'} = \frac{535{,}450lbft - 123{,}281bft}{43{,}654\ lb} = 9.4ft$$

D.9.4.4. This is within the middle third of the 20 ft. wide base and therefore the base is 100 percent in compression. With round-off differences this is that same as the CTWALL-R results.

D.9.4.5. Earthquake.

D.9.4.5.1. Because CTWALL-R is unable to run analyses for earthquake loading, the seismic coefficient method was used to analyze resultant location of the T-wall under earthquake loading according to this manual and EM 1110-2-2100.

D.9.4.5.2. The forces were obtained from the sliding factor of safety calculations, which included developed soil parameters for the lateral pressures per guidelines in this manual.

Moments from vertical forces, and the vertical forces, are the same as shown for the Normal case above. Forces are shown in Figure D.13.

D.9.4.5.3. Moments from horizontal forces are summarized in Table D.13. For the resisting pressure, at-rest pressure is not valid for the earthquake analysis. The computed passive pressure force (P_P) of 4,012 lb is less than computed total driving forces (P_{AE} + I) of 16,533 lb. Therefore the passive pressures computed for the sliding analysis are used. If the passive pressures are greater than the active forces, this analysis is invalid but stability will not be an issue.

Table D.13
Summation of Moments from Horizontal Forces

Horizontal Forces			
	Force, lb	Arm, ft	Moment, lb-ft
P_{A1}	-6,809	10.13	-68,975
P_{A2}	-4,753	2.4	-11,407
ΔP_{AE1}	-4,130	16.7	-68,971
ΔP_{AE2}	0	3.33	0
I	-6,507	11.5	-74,831
P_{WS} D	-780	1.7	-1,326
P_P	4,012	1.7	6,820
ΔP_{PE1}	276	3.3	911
ΔP_{PE2}	0	3.3	0
P_{WS} R	780	1.7	1,326
Total	-17,911	8.9	-216,453

D.9.4.5.4. The following calculations are for the MDE load case.

$$x_R(MDE) = \frac{535{,}450lbft - 216{,}453lbft}{43{,}654lb} = 7.3'$$

D.9.4.5.5. Using the same calculation procedure, calculations show that the resultant location for the OBE load case is:

$$x_R(OBE) = \frac{535{,}450lbft - 129{,}273lbft}{43{,}654lb} = 9.3'$$

D.9.4.5.6. For both the MDE and OBE load cases, the resultant location is within the middle third of the base, so the base is in 100 percent compression. As shown in Table D.10, the rotational stability requirements are satisfied for both load cases (R5 and R6).

D.10. Bearing Capacity.

D.10.1. The bearing capacity of the T-wall was analyzed to ensure that the pressure imparted on the foundation soils by the structure has an adequate safety factor against rupture of the soil mass, or settlement of the foundation of such magnitude, as to jeopardize its performance and safety. The USACE CASE program CTWALL-R (Version 1.0) was used to evaluate bearing capacity, according to this manual and EM 1110-2-2100. The resultant locations and slope, calculated in D.9 above, are critical in assessing the bearing capacity of the structure, and are included in the CTWALL-R analysis. Bearing capacity was calculated for the Normal Operating, Design Water Level, Probable Maximum Flood, and Surcharge loading conditions. Table D.14 summarizes the CTWALL-R bearing capacity results.

Table D.14
Results of Bearing Capacity Analysis Using CTWALL-R

Load Case	Load Description	Load Category	Driving Side Water Elevation (ft)	Resisting Side Water Elevation (ft)	Shear Strength	Minimum Required Factor of Safety	Calculated Factor of Safety
R1	Normal Operating (NO)	Usual	220	220	Undrained, Q	3.0	4.6
					Drained, S		3.0
R2	Design Water Level (DWL)	Unusual	232	230	Undrained, Q	2.0	7.0
					Drained, S		4.2
R3	Probable Maximum Flood (PMF)	Extreme	240	236	Undrained, Q	1.5	9.5
					Drained, S		5.0
R4	Surcharge (SHG)	Unusual	220	220	Undrained, Q	2.0	7.5
					Drained, S		2.8
R5	Operating Basis Earthquake (OBE)	Unusual	220	220	Undrained, Q	2.0	See Note 1
					Drained, S		3.9
R6	Maximum Design Earthquake (MDE)	Extreme	220	220	Undrained, Q	1.5	See Note 1
					Drained, S		1.9

1. Cohesion (tension) in backfill would reduce driving forces while foundation shear strength remains the same for Undrained and Drained cases. Undrained case assessed to not govern. Section 6.9.7 provides methods for calculating seismic active pressures with cohesive soils.

D.10.2. The following are the CTWALL-R bearing capacity inputs and outputs from the R1-NO drained (S) load case.

CTWALL-R Bearing Capacity Output:

```
**********************
 **  Bearing Results  **
 **********************

            Base width =     20.500 (ft)
                    Xr =      9.288 (ft)
  Effective base width =     18.576 (ft)
   (measured along slope)
            Base slope =     0.0000 (deg)

                   phi =     34.000 (deg)
                     c =      0.000 (ksf)
       Effective gamma =     0.0526 (kcf)

           Normal load =     43.654 (kips)
      Load inclination =     20.605 (deg)
     Load eccentricity =      0.962 (ft)

             Surcharge =     0.2630 (ksf)
             Embedment =      5.000 (ft)
          Ground slope =     0.0000 (deg)

          Bearing Capacity Factors
 ============================================
                     C        Q         G
 ============================================
 Bearing         42.1637   29.4398   31.1456
 Embedment        1.1012    1.0506    1.0506
 Inclination      0.5945    0.5945    0.1552
 Base Tilt        1.0000    1.0000    1.0000
 Ground Slope     1.0000    1.0000    1.0000

 Net ultimate bearing pressure =     7.1531 (ksf)

 +-------------------------------+
 | Factor of safety =      3.044 |
 +-------------------------------+
```

D.10.3. Bearing Capacity Example and Earthquake Bearing Capacity Computations.

D.10.3.1. Bearing Capacity Equations.

D.10.3.1.1. CTWALL-R is unable to run analyses for earthquake loading, so the seismic coefficient method was used to analyze bearing capacity of the T-wall under earthquake loading according to this manual and EM 1110-2-2100. The following is the equation for the factor of safety for bearing capacity:

$$FS = \frac{Q}{N'}$$

Where:

Q = ultimate bearing capacity component normal to structure base.

N' = resultant force component normal to base.

D.10.3.1.2. The ultimate bearing capacity equation is as follows per this manual:

$$Q = B'L'[\zeta_{cs}\zeta_{cd}\zeta_{ci}\zeta_{cb}\zeta_{cg}cN_c + \zeta_{qs}\zeta_{qd}\zeta_{qi}\zeta_{qb}\zeta_{qg}q_oN_q + \zeta_{\gamma s}\zeta_{\gamma d}\zeta_{\gamma i}\zeta_{\gamma b}\zeta_{\gamma g}\frac{1}{2}B'\gamma'N_\gamma]$$

Where:

B' = effective base width.

L' = effective base length.

ζ = correction factors for shape, depth, load inclination, base inclination, and ground inclination.

c = cohesive strength of soil beneath the base.

N_c, N_q, N_y = bearing capacity factors.

q_o = effective overburden pressure above base.

γ' = effective unit weight of soil above base.

D.10.3.2. The wall has a strip foundation so the length term is equal to one ($L' = 1$), and the shape correction factors are equal to one ($\zeta_{cs}, \zeta_{qs}, \zeta_{\gamma s} = 1$). The base and ground are level for this example so the base and ground inclination correction factors are equal to one ($\zeta_{cb}, \zeta_{cg}, \zeta_{qb}\zeta_{qg}, \zeta_{\gamma b}, \zeta_{\gamma g} = 1$). In addition, the soil below the base is sand with no cohesive strength (c = 0), so the cohesion term in the bearing capacity equation is zero. The resulting equation is:

$$Q = B'[\zeta_{qd}\zeta_{qi}q_oN_q + \zeta_{\gamma d}\zeta_{\gamma i}\frac{1}{2}B'\gamma'N_\gamma]$$

D.10.3.2.1. The following parameters are common to both the OBE and MDE load cases:

$q_o = (5')(115pcf - 62.4pcf) = 263psf$

$\phi' = 34°$

$$N_\phi = tan^2\left(45° + \frac{\phi'}{2}\right) = tan^2\left(45° + \frac{34°}{2}\right) = 3.53 \qquad (Meyerhof, 1963)$$

$$N_q = N_\phi e^{\pi tan\phi} = (3.53)e^{\pi \tan(34)} = 29.38 \qquad (Meyerhof, 1963)$$

$$N_\gamma = (N_q - 1)(\tan(1.4\phi)) = (29.38 - 1)(\tan((1.4)(34°))) = 31.08 \qquad (Meyerhof, 1963)$$

$$\gamma' = 115pcf - 62.4pcf = 52.6pcf$$

$$\zeta_{qd}, \zeta_{\gamma d} = 1 + 0.1\left(N_\phi\right)^{\frac{1}{2}}\left(\frac{D}{B}\right) = 1 + (0.1)(3.53)^{\frac{1}{2}}\left(\frac{5'}{20.5'}\right) = 1.05$$

D.10.3.2.2. The equation for the OBE and MDE load cases is:

$$Q = B'[(1.05)\zeta_{qi}(263psf)(29.38) + (1.05)\zeta_{\gamma i}\frac{1}{2}B'(52.6pcf)(31.08)]$$

$$Q = B'[(8{,}113psf)\zeta_{qi} + (858psf)\zeta_{\gamma i}B']$$

D.10.3.2.3. For the MDE case:

$$B' = B - 2e$$

$$e = \frac{B}{2} - x_R = \frac{20.5'}{2} - 7.3' = 2.95'$$

$$B' = 20.5' - (2)(2.95') = 14.6'$$

Where:

$e =$ loading eccentricity.

$$\zeta_{qi} = \left(1 - \frac{\theta}{90°}\right)^2$$

$$\theta = tan^{-1}\left(\frac{T}{V'}\right) = tan^{-1}\left(\frac{18{,}463lb}{43{,}654lb}\right) = 22.93°$$

Where:

$\theta =$ inclination angle between a vertical line and the resultant load on the wall.

$T =$ resultant load component parallel to base.

$V' =$ resultant load component normal to base.

$$\zeta_{qi} = \left(1 - \frac{22.93°}{90°}\right)^2 = 0.555$$

$$\zeta_{\gamma i} = \left(1 - \frac{\theta}{\phi}\right)^2 = \left(1 - \frac{22.93°}{34°}\right)^2 = 0.106$$

$$Q = 14.6'[(8{,}113psf)(0.555) + (858psf)(0.106)(14.6')] = 84{,}533lb\ per\ foot\ width$$

$$FS = \frac{84{,}533lb}{43{,}654lb} = 1.9$$

D.10.3.2.4. The factor of safety for the MDE load is consistent with the required condition FS >1.

D.10.3.2.5. For the OBE load, similar calculations show:

$$Q = 154{,}402lb\ per\ foot\ width$$

$$FS = \frac{170{,}050lb}{43{,}654lb} = 3.9$$

D.10.3.2.6. The factor of safety for the OBE load exceeds the minimum required FS = 2.

D.11. Global Stability.

D.11.1. The global stability performance mode was assessed to determine whether the soil mass around the wall will rotate or translate in the absence of structural support. The computer program SLOPE/W in GeoStudio 2016 (Version 8.16.2.14053, GeoSlope International) was used to run the stability analyses for six load conditions: normal operating level (NO), design water level (DWL), probable maximum flood (PMF), surcharge (SHG), operating basis earthquake (OBE), and the maximum design earthquake (MDE). Spencer's limit equilibrium method was used to determine the stability factors of safety.

D.11.2. Both undrained (Q) and drained (S) analyses were run for each load condition except for the seismic loads, as the soils are expected to exhibit undrained behavior under the rapid seismic loading. Circular and non-circular wedge surfaces were analyzed for each load condition and strength, and a search for tension cracks was included to eliminate tension in the interslice forces. Table D.15 below summarizes the results of the global stability analyses. Figure D.14 shows the results for the NO load case with drained (S) strength and circular slip surface.

D.11.3. The soils are not susceptible to liquefaction or significant increase in pore pressures due to the design ground motions for the MDE and the OBE. A pseudostatic global stability analysis was performed considering a required minimum factor of safety of 1.1 as described in paragraph 17.10.1.1. The calculated global stability factor of safety for the earthquake event is much greater than what is required during static conditions. Considering this, no further evaluation for post-earthquake horizontal displacement of the wall was made.

Table D.15
Results of Global Stability Analyses Using SLOPE/W

Load Case	Load Description	Load Category	Water Elevation (ft)			Global Stability FS			
			Driving Side	Resisting Side	FS_{req}	Q Strength		S Strength	
						Circular	Non-circular	Circular	Non-circular
R1	Normal Operating (NO)	Usual	220.0	220.0	1.6	2.4	2.5	1.8	2.1
R2	Design Water Level (DWL)	Unusual	232.0	230.0	1.5	2.9	3.0	1.9	2.2
R3	Probable Maximum Flood (PMF)	Extreme	240.0	236.0	1.4	3.6	3.6	2.0	2.3
R4	Surcharge (SHG)	Unusual	220.0	220.0	1.5	2.3	2.3	1.7	1.9
R5	Operating Basis Earthquake (OBE)	Unusual	220.0	220.0	1.5	2.3	2.3	N/A	N/A
R6	Maximum Design Earthquake (MDE)	Extreme	220.0	220.0	1.1	1.8	1.8	N/A	N/A

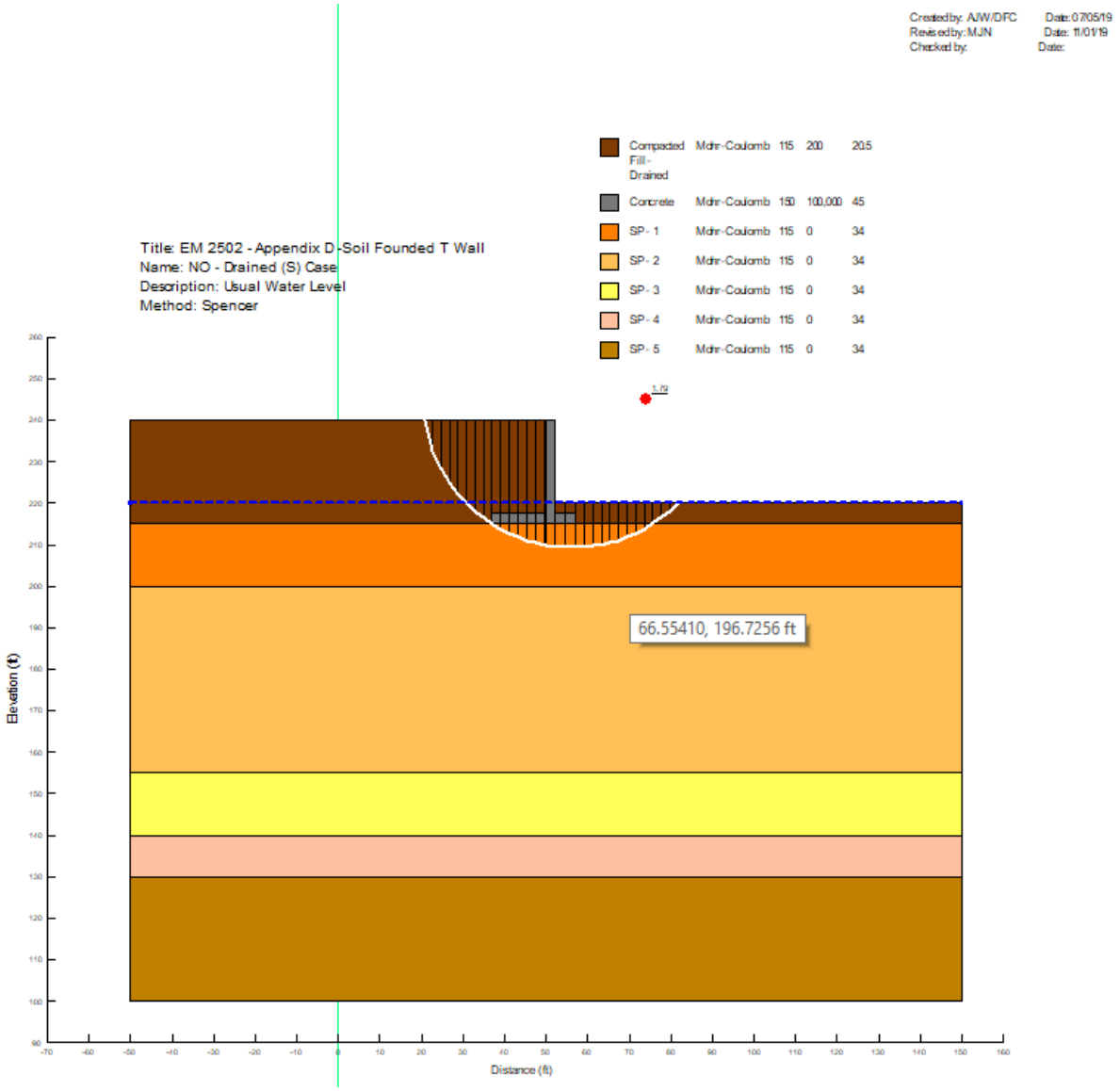

Figure D.14. Global Stability Results – NO Drained

D.12. Internal Erosion. The T-wall will function as an earth retaining wall, rather than a floodwall. The Arkansas River level on the resisting side of Figure D.8 would not result in seepage toward the higher ground surface on the driving side. The earth fill on both the driving and resisting sides of the proposed T-wall will be composed of high plastic clay material, with a minimum thickness of 5 ft. For the design cases with water a few feet higher in the backfill than on the resisting side, the clay material has a sufficiently low hydraulic conductivity to prevent significant seepage around the wall toward the river. Therefore, internal erosion, including heave and piping around the proposed T-wall, is not a concern.

D.13. Settlement. The proposed T-wall is founded entirely on non-cohesive granular soils with high relative densities that are assumed to be nearly incompressible. Total settlement values will be small, and due to the free draining nature of the material, the majority of settlement that is induced will occur during construction, so settlement of the T-wall is not a concern.

D.14. Seismic Performance, Liquefaction, and Cyclic Softening.

D.14.1. Seismic performance, liquefaction, and cyclic softening analyses are completed to evaluate the level of performance that can be expected after a design earthquake event. Poor performance of the structure is to be expected if the bearing stratum is susceptible to liquefaction and earthquake induced shear strength loss (SSL). Seismic performance was evaluated for the sliding stability, resultant location, bearing capacity, and global stability analyses as described in sections D.8 through D.11.

D.14.2. The cohesive materials at the site are limited to compacted fills and are not expected to experience cyclic softening. For the noncohesive foundation soils, cyclic liquefaction potential was evaluated to identify potential failure mechanisms for the OBE and MDE ground motions.

D.14.3. Values for earthquake moment magnitude (M_w) for the MDE and OBE were obtained from the USGS Unified Hazard Tool website (https://earthquake.usgs.gov/hazards/interactive/) using the 2014 Dynamic edition. The deaggregation function was used to produce the different Mw that contribute to the seismic hazard. The M_w values that had the highest contribution to the site seismic hazard for the OBE and MDE ground motions were selected as the relevant values for design. Based on the deaggregation, the relevant M_w values are:

M_w = 4.91 for the OBE (144-year return period)

M_w = 7.50 for the MDE (1,000-year return period)

Relevant design PGA values are the same as the values described in section D.6.5.

D.14.4. The cyclic liquefaction and softening analysis were completed using the procedure outlined in Boulanger and Idriss (2014). This procedure assesses the factor of safety against triggering of cyclic liquefaction and softening using the ratio of the *CRR* to the *CSR*, according to section 17.3 of this EM as follows:

$$FS_{CLS} = \frac{CRR}{CSR}$$

Where:

FS_{CLS} = factor of safety against cyclic liquefaction and softening.

D.14.4.1. The *CSR* is calculated by the following equation:

$$CSR = 0.65 \cdot PGA(\frac{\sigma_{vo}}{\sigma'_{v0}})r_d$$

D.14.4.2. The PGA for the OBE and MDE earthquakes was calculated in an earlier section. The stress reduction factor r_d is a function of depth as shown on the following Figure D.15 from Boulanger and Idriss (2014).

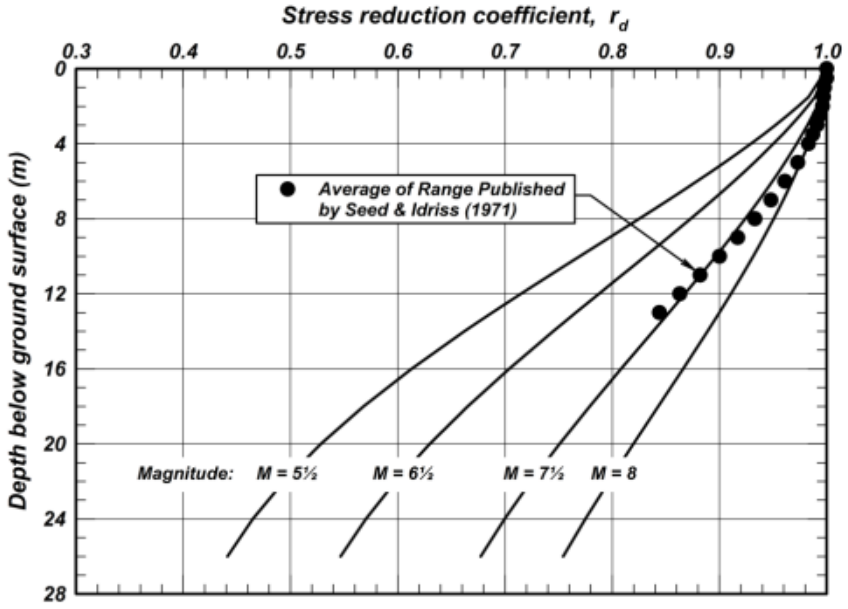

Figure D.15. Shear Stress Reduction Factor r_d Versus Depth

D.14.5. The cohesive fill layer is unlikely to undergo cyclic softening due to its relatively high undrained shear strength. According to Boulanger and Idriss (2007), the CRR for the clay fill can be estimated as follows:

$$CRR = 0.8 \cdot \frac{s_u}{\sigma'_{vc}}$$

D.14.5.1. The lowest possible *CRR* for the clay fill would be at the bottom of the layer on the driving side where the vertical effective stress (σ'_{vc}) is highest. Analysis of the UU tests on the clay fill indicated a design undrained shear strength s_u = 1,450 psf. The following calculation provides the *CRR* for the clay fill at elevation 215 ft. on the resisting side of the wall for Normal Operating Water (elevation 220 ft.) conditions:

$$CRR = 0.8 \cdot \frac{1{,}385psf}{[(115pcf - 62.4pcf)(220ft - 215ft)]}$$

$$= 0.8 \cdot \frac{1{,}385psf}{[(52.6pcf)(5ft)]} = 0.8 \cdot \frac{1{,}385psf}{[263psf]}$$

$$= 4.21$$

D.14.5.2. The *CSR* for the MDE event at the same elevation is:

$$CSR = 0.65 \cdot 0.195 \cdot \frac{[115pcf(220ft - 215ft)]}{[263psf]} \cdot 1$$

$$= 0.65 \cdot 0.195 \cdot \frac{[575psf]}{[263psf]} \cdot 1$$

$$= 0.28$$

Where:

The reduction factor $r_d = 1$ according to Figure D.15.

D.14.5.3. Therefore, the lowest factor of safety against cyclic softening for the clay fill would be:

$$FS_{CLS} = \frac{4.21}{0.28} = 15$$

D.14.6. The *CRRs* for the sands were calculated using the site CPT data described in section D.4.3.2. The equation for *CRR* for the CPT data is from Boulanger and Idriss (2014):

$$CRR_{M,\sigma'_v} = CRR_{M=7.5,\sigma'_v=1} \cdot MSF \cdot K_\sigma \cdot K_\alpha$$

Where:

$$CRR_{M=7.5,\sigma'_v=1} = \exp\left(\frac{q_{c1Ncs}}{113} + \left(\frac{q_{c1Ncs}}{1{,}000}\right)^2 - \left(\frac{q_{c1Ncs}}{140}\right)^3 + \left(\frac{q_{c1Ncs}}{137}\right)^4 - 2.8\right)$$

$$q_{c1Ncs} = q_{c1N} + \Delta q_{c1N}$$

$$q_{c1N} = C_N \frac{q_c}{P_a}$$

$$q_c \approx q_t \; for \; sands$$

$$C_N = \left(\frac{P_a}{\sigma'_v}\right)^m \leq 1.7$$

$$m = 1.338 - 0.249(q_{c1Ncs})^{0.264}$$

$$MSF = 1 + (MSF_{max} - 1)\left(8.64exp\left(\frac{-M}{4}\right) - 1.325\right)$$

$$MSF_{max} = 1.09 + \left(\frac{q_{C1N_{CS}}}{180}\right)^3 \leq 2.2$$

$$K_\sigma = 1 - C_\sigma ln\left(\frac{\sigma'_v}{P_a}\right) \leq 1.1$$

$$C_\sigma = \frac{1}{37.3 - 8.27(q_{c1Ncs})^{0.264}} \leq 0.3$$

$$K_\alpha = 1\ (level\ ground)$$

D.14.7. The following shows a sample *CRR* calculation for CPT sounding 19-251C at elevation 197.36 ft. with ground surface at elevation 220 ft. and the groundwater table at ground surface:

$$\sigma_v = (115pcf)(220ft - 197.36ft) = 2{,}603 \text{ psf}$$

$$\sigma'_v = (115pcf - 62.4pcf)(220ft - 197.36ft) = 1{,}191 \text{ psf}$$

$$q_c = 125.68\ tsf$$

$$P_a = 2{,}116\ psf$$

D.14.7.1. Use a spreadsheet auto-iteration function to iterate C_N, m, and q_{c1Ncs} to obtain:

$$q_{c1Ncs} = 158.5tsf$$

Then, $$CRR_{M=7.5,\sigma'_v=1} = \exp\left(\frac{158.5}{113} + \left(\frac{158.5}{1{,}000}\right)^2 - \left(\frac{158.5}{140}\right)^3 + \left(\frac{158.5}{137}\right)^4 - 2.8\right) = 0.356$$

$$MSF_{max} = 1.09 + \left(\frac{158.5}{180}\right)^3 = 1.773$$

$$MSF = 1 + (1.773 - 1)\left(8.64exp\left(\frac{7.5}{4}\right) - 1.325\right) = 1$$

$$C_\sigma = \frac{1}{37.3 - 8.27(158.5)^{0.264}} = 0.16$$

$$K_\sigma = 1 - 0.16ln\left(\frac{1{,}190.86psf}{2{,}116psf}\right) = 1.09$$

$$CRR_{M,\sigma'_v} = 0.356 \cdot 1 \cdot 1.09 \cdot 1 = 0.388$$

D.14.7.2. The *CSR* for the MDE event at the same elevation is:

$$CSR = 0.65 \cdot 0.195 \cdot \frac{[2{,}603.06psf]}{[1{,}190.86psf]} \cdot 0.94$$

$$= 0.260$$

Where:

The reduction factor $r_d = 0.94$ according to Figure D.15.

D.14.7.3. The factor of safety against liquefaction is:

$$FS_{CLS} = \frac{0.388}{0.260} = 1.5$$

D.14.8. Separate analyses were completed for each CPT sounding, for both the MDE and OBE ground motions. For the OBE, all calculated factor of safety values exceeded the minimum value of 1.5. For the MDE event, a number of thin, deep, and isolated zones had factor of safety values that fell below the minimum required value. These zones generally were not continuous through multiple CPT soundings.

D.14.9. Based on the required performance levels, the T-wall should be designed to be serviceable and operable immediately following an OBE event and to not collapse under the MDE event. For the MDE, due to the depth, thickness, and discontinuous nature of the potentially liquefiable zones, a collapse of the T-wall would not be expected. For the OBE, the foundation soils are not susceptible to earthquake induced SSL, so performance failure modes considering reduced shear strengths during and after the seismic event are not a concern, and post-earthquake deformation was not analyzed. Pseudo static analyses of the performance modes were performed using static shear strengths and are included in sections D.8.6, D.9.4.5, D.10.3, and D.11.

D.14.10. Figure D.16 shows the results of the liquefaction analysis for CPT sounding 19-251C with MDE ground motion. The tip resistance q_t and the side friction f_s are data from the original CPT soundings. The CRR, CSR, and FS are based on the equations presented earlier in this section.

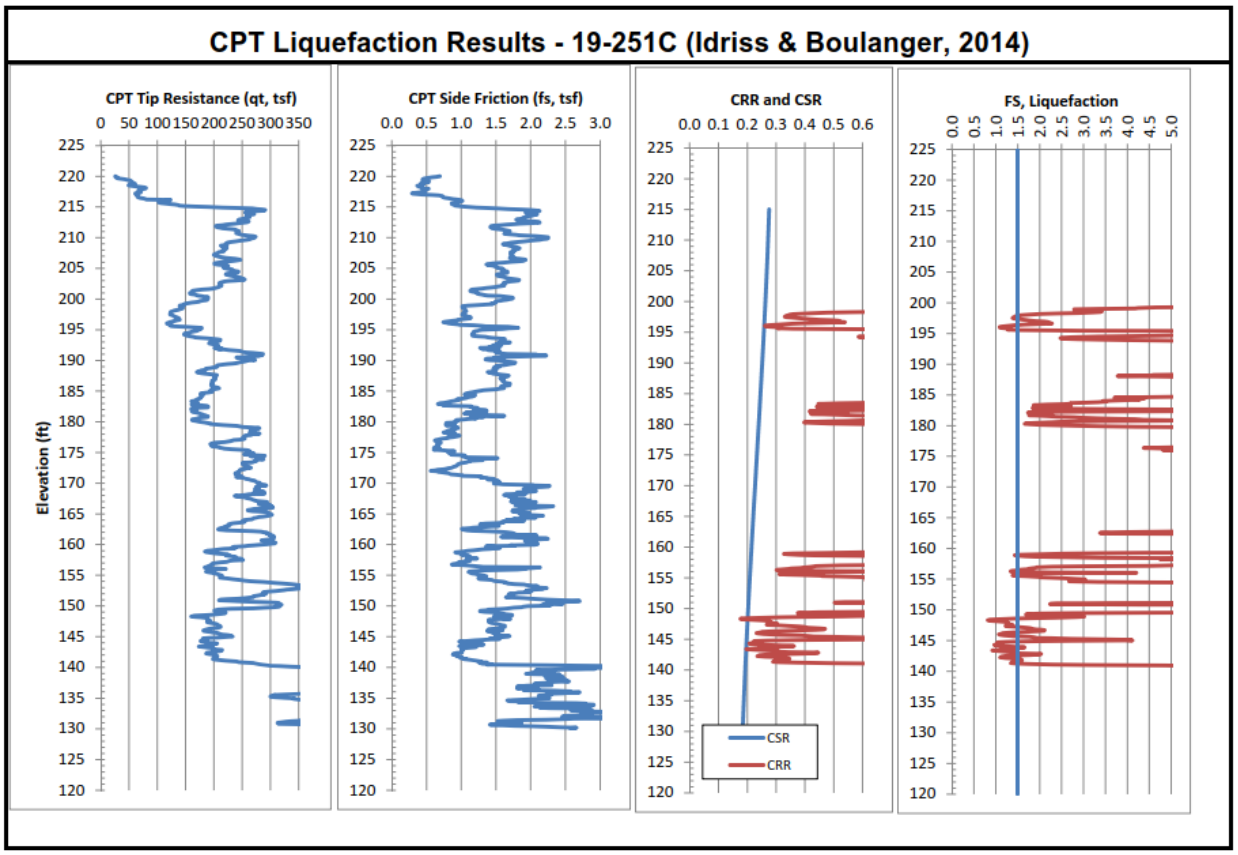

Figure D.16. Liquefaction Results – MDE Loading

D.15. Strength and Serviceability of Structural Elements.

D.15.1. Design of the concrete stem wall and base slab should be performed according to EM 1110-2-2104. The design should consider the three hydrostatic loading conditions shown in Figure D.8. The stem should be analyzed as a cantilever beam as specified in section 7.9.2 of this EM. The width of the stem can be initially assumed to be h/8 (where h is the height of the stem). The height of the stem is 22.5 ft. and therefore the width of the stem at the base was set at 3 ft. and should provide sufficient thickness to resist shear. This can be optimized in design. Because it is a tall stem, the stem will be tapered from 3 ft. at the base of the wall to 2 ft. at the top of the wall. A base slab thickness of 2.5 ft. was selected and should be sufficient to carry the loads transferred from the stem. Figure D.1 shows the final configuration of the T-wall.

D.15.2. In addition to the design of the wall and base slab for the design loads, calculations should be performed to ensure that the requirements in EM 1110-2-2104 for temperature and shrinkage reinforcement are met. The temperature and shrinkage reinforcement should be checked in both the lateral and longitudinal directions of the wall section.

D.15.3. The shear strength, V_n, provided by concrete (V_c) and reinforcement (V_s) should be computed according to EM 1110-2-2104.

Appendix E
Design Example – Pile-Founded T-Type Coastal Floodwall

E.1. General. The following example is specific to pile-founded coastal floodwalls. This example covers the design of a single straight monolith. For inland floodwalls and other hydraulic retaining walls, this example can be adapted utilizing other deep foundation types and site-specific loads and load combinations. The design follows the guidance outlined in Chapter 8 of this Engineering Manual. English units are used in this example. See Appendix A for metric conversions.

E.2. Problem Statement.

E.2.1. Authorization has been approved for the design and construction of a coastal floodwall near the Gulf of Mexico. This floodwall is a portion of a larger flood risk management system. This floodwall protects both residential areas and industrial businesses that may have hazardous materials on site. Due to soft soils in the area and space limitations that prevent construction of a levee, a pile-founded T-wall was selected for providing the necessary flood protection.

E.2.2. Hydrologic analysis has been performed and it was determined to establish the flood event return period at 500 years. The corresponding NAVD 88 elevation is 23.60 ft. The existing ground elevation along the proposed alignment is 7.00 ft. (NAVD 88). Since the frost depth is shallow, grass cover is not necessary, and no underground utilities cross the alignment, the top of the base can be set to match the existing ground elevation. The body of water adjacent to the floodwall does have pleasure craft but is not used by commercial water-craft. Local USACE District criteria utilizes a 500 pounds per linear foot (plf) load for pleasure craft impact. There are no residential or commercial structures located within the proposed alignment right-of-way.

E.2.3. No long-term settlement is anticipated, and wave overtopping mitigation will be provided by landside concrete scour protection. This floodwall is utilized in the National Flood Insurance Program (NFIP) and the top must be entirely above the established design elevation. To account for construction tolerance, the top of wall elevation will be set to account for an allowable deviation from elevation of ±3/4 in. Based on this information, the top of wall elevation is set to 23.67 ft. Using these floodwall design elevations, an equivalent wave force with its corresponding elevation was computed based on the coastal hydraulics model wave pressure diagram. Figure E.1 identifies key elevations and corresponding given loads developed prior to detail design.

Pre-Design Information (Elevations are NAVD88)			
500 yr. SWL EL. =	23.60 ft	Top of Wall EL. =	23.67 ft
Top of Exist. Grade EL. =	7.00 ft	Top of Base EL. =	7.00 ft
Wave Impact EL. =	15.43 ft	Wave Impact Force =	10,292 plf
Boat Impact EL. =	23.60 ft	Boat Impact Force =	500 plf

Figure E.1. Predesign Information

E.3. Site Information.

E.3.1. Site Information Category. The site information category is Ordinary. Design factors of safety will reflect this site information category. Geotechnical field explorations and laboratory testing showed only small variations in the soil column throughout the project site. The T-wall is a new structure, and strata thicknesses and soil types were fairly consistent along the proposed wall alignment.

E.3.2. Topography and Bathymetry. A new survey provided sufficient topographic and bathymetric data to develop appropriate reach selections and analysis cross sections.

E.3.3. Geology. A geologic map assessment was performed at an earlier stage to determine the scope of the geotechnical field exploration and laboratory testing.

E.3.4. Seismic. The project is located within the Low Seismic Hazard Zone as delineated in the Seismic Hazard Regions Map included in ER 1110-2-1806.

E.3.5. Reach Selection and Analysis Cross Section. Based on the topography, bathymetry, geology, and hydraulic conditions, the T-wall section of the flood control system was divided into appropriate reaches and analysis cross sections. Figure E.1 shows subsurface information below the T-wall.

E.3.6. Environmental. Corrosion testing, including pH measurement, electrical conductivity, and chloride and sulfate ion measurement, indicated that the soils and pore fluid are non-corrosive to concrete and metal. There are no known contaminants at the project site.

E.3.7. Geotechnical Investigation. A geotechnical investigation was performed according to the recommendations in Chapter 5. The design unit weight and shear strength values are presented in Figure E.2. The design shear strength values were selected such that approximately two-thirds of the data were above the design value and one-third of the data were below the design value. The design unit weight is the average value of all the data. Soil stiffness values with depth are presented in Figure E.3.

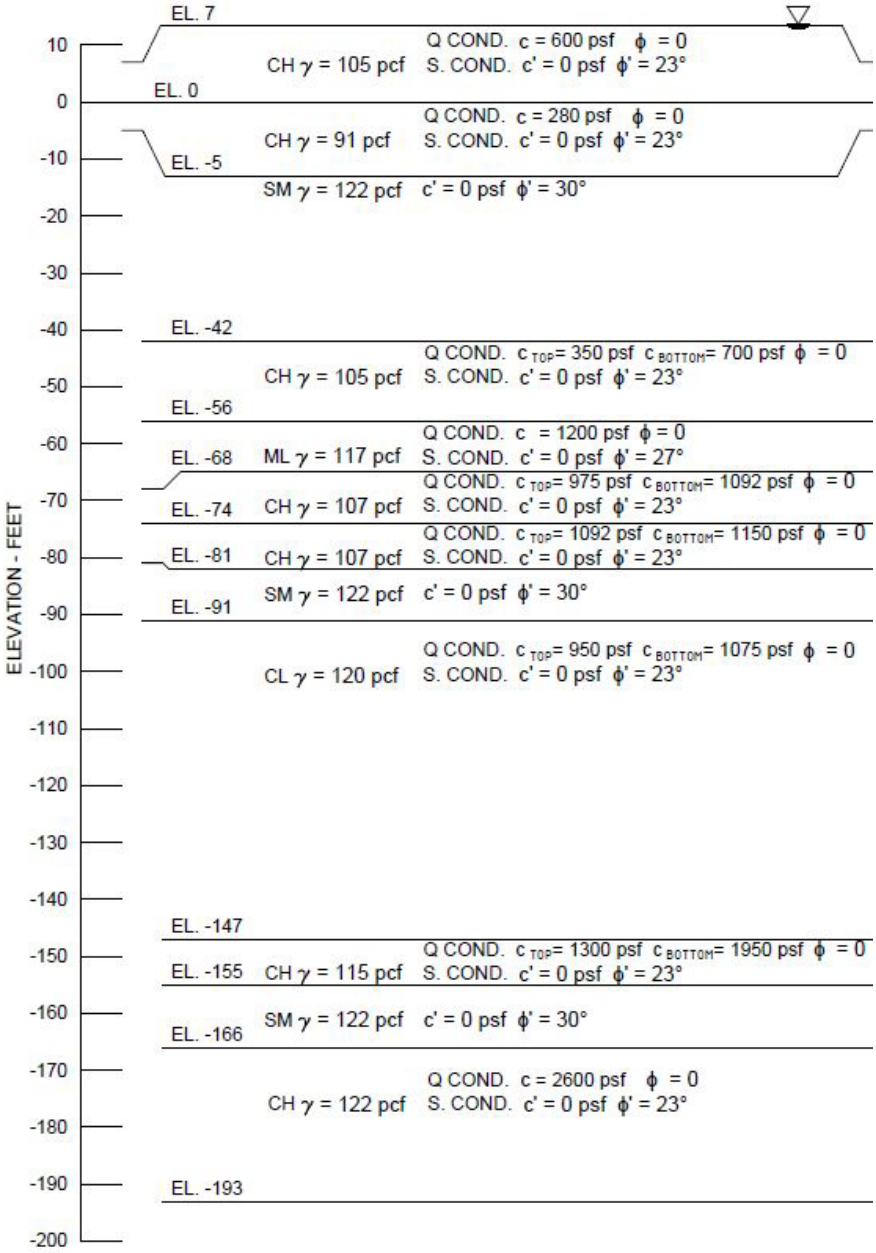

Figure E.2. Design Subsurface Soil Profile

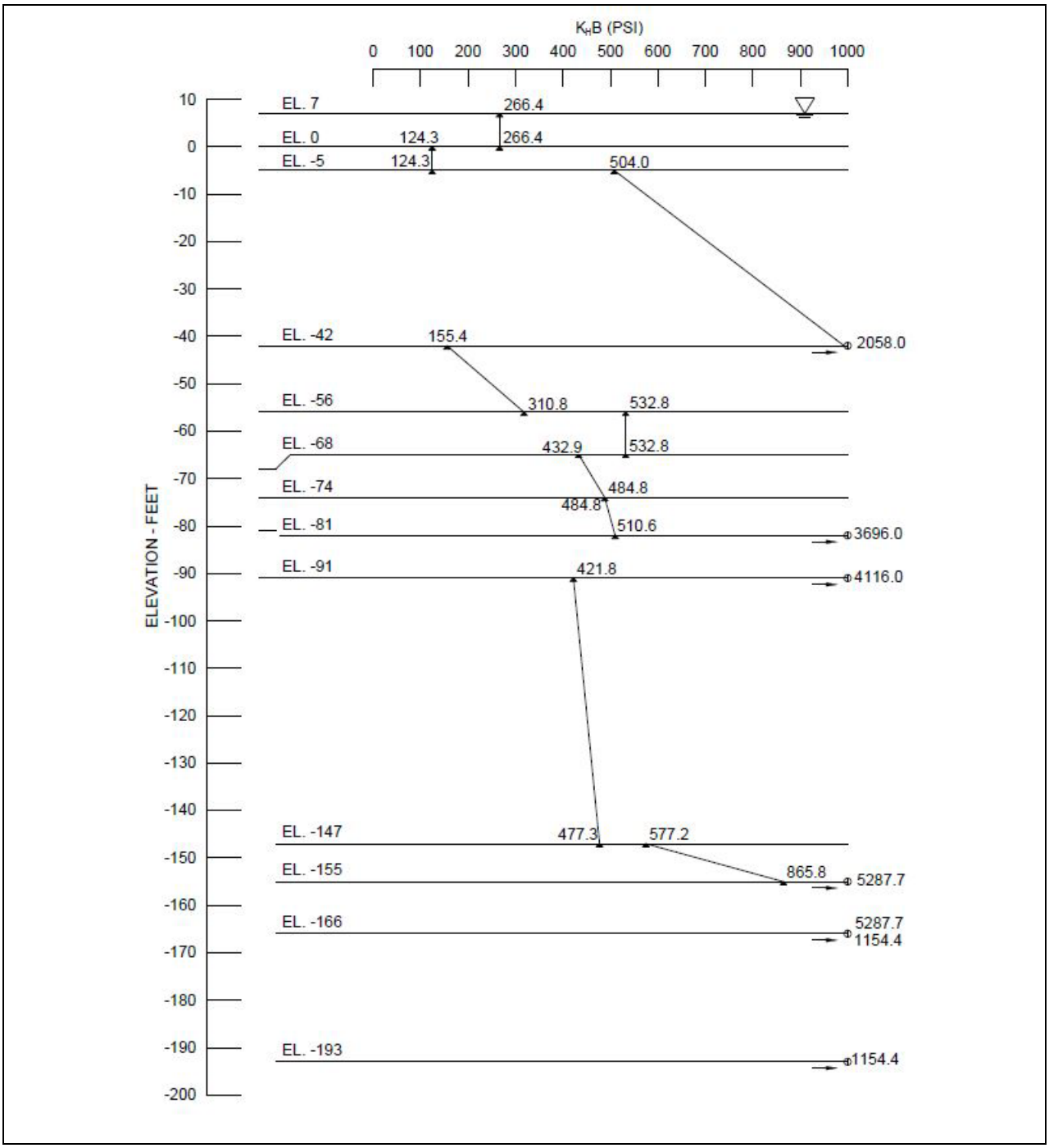

Figure E.3. Soil Stiffness with Depth (K_HB)

E.4. Structure Classification. According to section 3.2.1 of this manual and Appendix H of EM 1110-2-2100, the floodwall is a Critical structure. Failure of the floodwall during a storm event could directly or indirectly lead to loss of life (paragraph H-2.d in Appendix H of EM 1110-2-2100).

E.5. Initial Wall Geometry.

E.5.1. Stem Thickness.

E.5.1.1. The wall stem minimum thickness can be determined by H/8, where H is the height of the wall stem. This minimum thickness is typically sufficient for hydrostatically loaded walls with no dynamic companion loads. When it is known that there will be significant dynamic loads, such as wave or barge impact, the stem thickness should be increase further. This increase is computed based on the shear strength per inch thickness of a 1 ft. strip of concrete (2 x (4,000psi)$^{1/2}$ x 12in). For a 4,000 psi normal weight concrete, the shear capacity is approximately 1.52 kips/in thickness. The calculation is shown in Figure E.4.

Estimate Stem Thickness

$$t_{stem} = \frac{H}{8} + \frac{Hw}{\left(\frac{1.52\ \frac{kips}{ft}}{in.}\right)}$$ *(eqn. to estimate initial stem thickness)*

$$H = (23.67' - 7.00')\left(\frac{12\ in}{ft}\right)$$

Where:

H =	200.0	in	*(stem height)*
Hw =	10.292	kips/ft	*(wave load)*
t_{stem} =	31.78	in	
Use: t_{stem} =	32.00	in	

Figure E.4. Estimated Stem Thickness

E.5.1.2. This gets closer to the design section and does not often need to be increased during strength design. As a result, the number of iterations performed in developing the foundation loads and analysis is reduced.

E.5.2. Base Thickness. The base thickness can be estimated by adding together the stem thickness, the depth of pile embedment (d_{emb}; initially assume pinned embedment), and the vertical driving tolerance (d_{tol}). If battered piles are used, the pile embedment depth is measured from the highest point of the pile (top corner of H-pile). The pile depth is determined by the bottom corner, which is embedded 6″ min. according to Chapter 8. The top corner measurements for typical batters are; 12.2″ for 2V:1H, 10.4″ for 3V:1H, and so forth to 6″ for no batter. For this example, a 2V:1H batter is assumed due to the significant lateral load. It should be noted that a 2V:1H batter is difficult to build and should be limited in new design. When determining the vertical driving tolerance, allow for higher variability in soft soils. The calculation is shown in Figure E.5.

Estimate Base Thickness			
	$t_{base} = t_{stem} + d_{emb} + d_{tol}$		*(eqn. to estimate thickness of base slab)*
Where:	d_{emb} =	12.2 in	*(depth of pile embedment)*
	d_{tol} =	2 in	*(vertical driving tolerance)*
	t_{base} =	46.20 in	
Use:	t_{base} =	47.00 in	

Figure E.5. Estimated Base Thickness

E.5.3. Base Width.

E.5.3.1. As part of determining the base width, determine the number of pile rows. As a general rule of thumb, the base width should be similar to the stem height. First check a two pile row foundation with max spacing of 8B. So for an HP 14x89, bf = 14.7″ we get 8B = 8(14.7″) = 117.6″ or 9.8 ft. Minimum edge distance is 1.5B = 1.5(14.7″) = 1.84 ft. This results in a total base with of 13.48 ft. Since this is noticeably less than the stem height, it is likely that three pile rows will be needed. Figure E.6 shows the calculation of the bracketed range for base width based on the corresponding group reduction factor as shown in EM 1110-2-2906.

Estimate Base Width			
Initial Pile Type =	HP14x89		
Where:	b_f = B =	14.7 in	*(flange width = pile diameter)*
	# of pile rows, n =	3	
	Min. Width =	$[(n-1)*3B+5B]\left(\frac{ft}{12\ in}\right)$	
	Min. Width =	13.48 ft	
	pile group reduction factor, R_g =	3.0	
	Max Width =	$[(n-1)*8B+5B]\left(\frac{ft}{12\ in}\right)$	
	Max Width =	25.73 ft	
	pile group reduction factor, R_g =	1.0	

Figure E.6. Estimated Base Width

E.5.3.2. Try a pile spacing of 5B. This results in a spacing of 6.13 ft.; use 6′6″. Use 2′0″ edge distance. This results in a base width of 17′0″ with a pile group reduction factor of R_g = 2.11 by interpolation.

E.5.4. Monolith Length. The final geometric value that needs to be computed is the monolith length. Per EM 1110-2-2906, it is recommended that a side by side spacing of friction piles are a minimum of 3B-5B depending on the characteristics of the soil and pile. We will assume a 5B spacing of 6′6″ to match the pile row spacing. This results in a monolith length of either 39′ or 45.5′ with a monolith length to height aspect ratio of 1.89 and 2.21 respectively.

EM 1110-2-2104 discusses joint spacing between 1 to 3 times the monolith height leaning towards 3 for shorter walls and 1 for tall walls. This floodwall is at an intermediate height and thus the aspect ratio previously noted falls close to the intermediate range. Using engineering judgment, a monolith length of 39′ is chosen in order to minimize the temperature and shrinkage reinforcement requirement. A plan view of the pile layout is shown in Figure E.8 along with the location of the pile group analysis computer program, CPGA, origin.

E.5.5. In order to cut off internal erosion from the waterside to the landside that may be created by settlement of the soil below the slab, a sheet pile cutoff wall is needed. The sheet pile cutoff wall should be located between the two rows of piles that are adjacent to each other with their batters in opposing directions. The sheet pile cutoff wall is placed half-way between these two rows of piles as shown if Figure E.7.

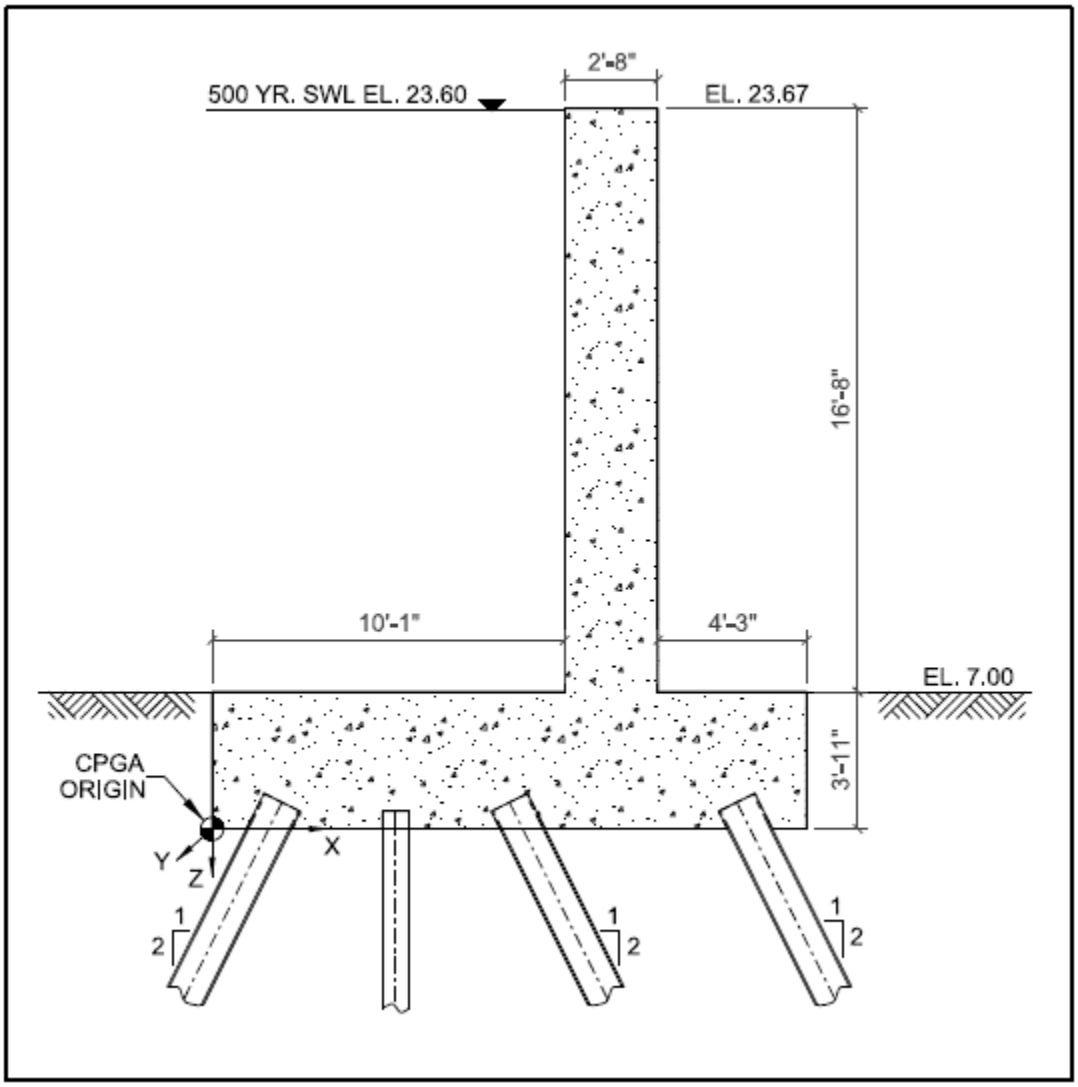

Figure E.7. Cross Section Geometry of T-Wall

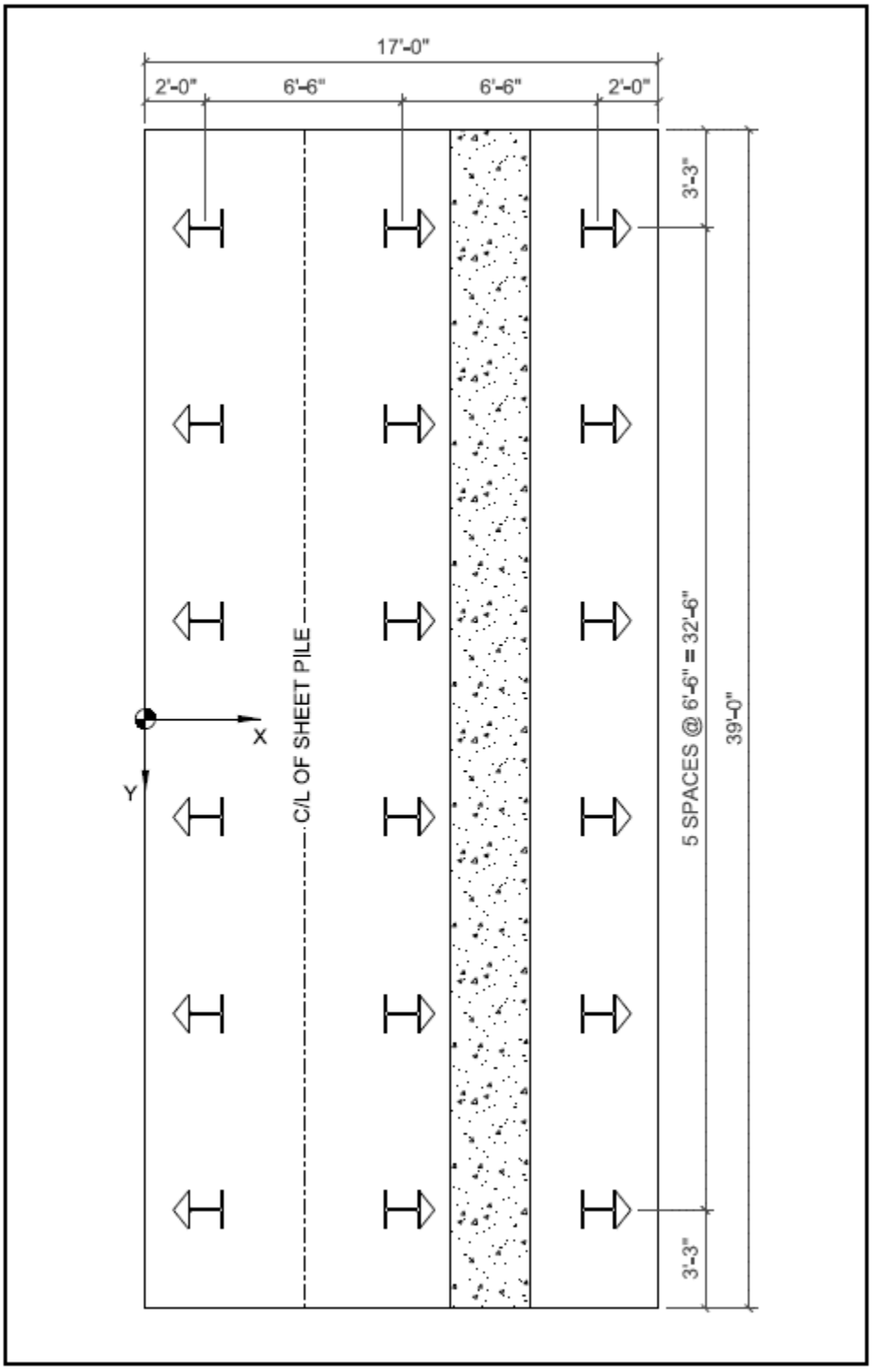

Figure E.8. Plan view of T-Wall Monolith Pile Layout

E.6. Soil-Pile Interaction.

E.6.1. Foundation Analysis Requirements Using CPGA. Other than the system loads and pile coordinates, CPGA requires several inputs in order to adequately perform analysis of the pile group. The specific input can be found in Technical Report ITL-89-3 User's Guide: Pile Group Analysis (CPGA) Computer Program. Key inputs include pile axial capacity as shown in Figure E.9 and the horizontal subgrade reaction with respect to the pile width ($E_S = K_hB$).

E.6.2. Pile Axial Capacity. Pile capacity curves, one for compression and one for tension, were based on pile load tests using a pile-driver analyzer (PDA) and the ultimate capacities are shown in Figure E.9. Development of these curves followed the procedures provided in EM 1110-2-2906.

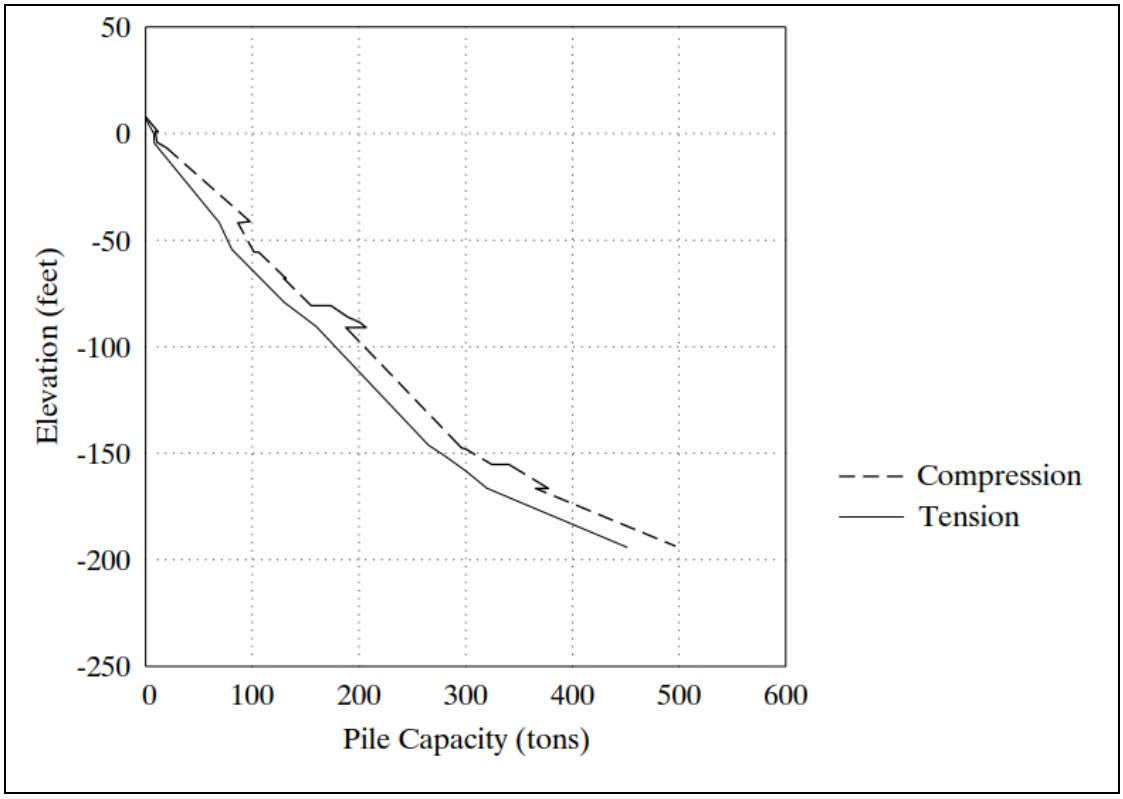

Figure E.9. Pile Ultimate Capacities

E.6.3. CPGA (E_S) Value. As previously noted, $E_S = K_hB$ where K_h is the horizontal subgrade modulus and B is the pile width. The bulk of the lateral resistance will occur in the upper third of the pile. For this example, we will utilize the E_S value based on the average value of the upper third of the embedded pile. Figure E.3 shows the soil stiffness with depth. Assuming an initial pile length of 109 ft., an average E_S value of 385 psi or 0.385 ksi is used. This value is reduced based on the group reduction factor previously provided. As a result, the E_S value becomes 0.385/2.11 = 0.182 ksi.

E.6.4. CPGA Axial Stiffness Modifier (C33). It is recommended to compute this value in lieu of utilizing the default values in the CPGA manual. As the foundation design is economized, the axial stiffness modifier needs to be adjusted as the pile size and pile embedment changes. An initial value can be determined using the COE method where the load corresponds to the point on the curve that has a slope of not more than 0.01 in. per ton. The initial pile tip is set at -100 ft. with an ultimate axial compression capacity of 200 tons. This assumes a design load of 200 kips. An HP14x89 has a cross-sectional area of 26.1 square inches. The pile length due to a 2V:1H batter is 109. Therefore, the computed axial stiffness modifier to be used in the initial CPGA analysis is 0.35 according to EM 1110-2-2906. The computation is as follows.

$$C_{33} = \frac{\frac{PL}{AE}}{\delta} = \frac{\frac{200(109 * 12)}{(26.1)(29{,}000)}}{1.0} = 0.35$$

E.6.5. For awareness, the higher the C33 value, the smaller the lateral and vertical deflections at the origin become and the higher the axial pile reactions. The difference between the deflections is more significant than the difference between the axial loads.

E.7. System Loads. The system loads can be found in Chapter 6 of this EM. The strength and serviceability load factors for the various load types can be found in Chapter 3 of EM 1110-2-2104. The loads to be applied to the analysis and design are presented below.

E.7.1. Dead, D. The gravity load for this T-wall is limited to the dead weight of the concrete wall. The dead load is calculated in Figure E.10.

Dead Loads, D

	Length (ft)	Width (ft)	Area (ft^2)	Depth z-dir. (ft)	Volume (ft^3)
Base Slab, D1:	39.00	17.00	663.00	3.917	2596.8
Wall Stem, D2:	39.00	2.67	104.00	16.67	1733.7

unit weight concrete, γ_c: 150 pcf

$$F_z = \text{Volume} * \gamma_c \left(\frac{\text{kips}}{1000\ \text{lbs}}\right)$$

x = horizontal distance from origin to center of gravity

$$M_y = -(F_z x)$$

Item	Fx (kips)	Fy (kips)	Fz (kips)	x (ft)	y (ft)	z (ft)	Mx (k-ft)	My (k-ft)	Mz (k-ft)
D1			389.51	8.50				-3310.9	
D2			260.05	11.42				-2968.9	

Figure E.10. Dead Loads

E.7.2. Hydrostatic, Hs.

E.7.2.1. The hydrostatic and groundwater loads are produced by the various water levels that have been identified for the design. Since no water reaches the floodwall during normal conditions (<10-year storm event), hydrostatic pressure is only considered in the design for the 500-year storm event. This event will be considered as the maximum surge since the top of wall elevation will be set at or slightly above this elevation. The hydrostatic load includes uplift on the bottom of the base slab utilizing a bracketed approach assuming the seepage cutoff is fully effective or fully ineffective. Groundwater levels on the landside are assumed to never rise above the bottom of the base.

E.7.2.2. Since the T-wall is near the Gulf of Mexico, a unit weight of 64 lb/ft^3 for saltwater will be used for the water. Also, as described in section 6.6.10.8 of Chapter 6 of this manual, uplift on walls with deep foundations use a bracketed approach where the sheet pile cutoff wall is assumed to either be fully effective or fully ineffective as demonstrated in Figure 6.6a and Figure 6.6b, respectively, of Chapter 6. The resulting hydrostatic loads for the 500-year storm event are calculated in Figure E.11.

E.7.3. Wave, Hw. The equivalent wave force and moment arm was previously computed following guidelines from EM 1110-2-1100. Changes in pressure on the bottom of the base slab due to wave loads is not considered since the load is transient and will not have time to permeate the ground. The wave load is calculated in Figure E.12.

Hydrostatic, Hs

	Flood Side	Land Side			
500 yr. event, EL_{500} =	23.60	3.08	ft	top of wall, EL_{TOP} =	23.67 ft
	Area			top of base, EL_{BASE} =	7.00 ft
Flood Side Hsv, A_{FS}:	393.25	ft^2		bot. of base, EL_{BOT} =	3.08 ft
Protected Side Hsv, A_{PS}:	165.75	ft^2		width of base slab, W:	17.00 ft
unit weight of water, γ_w:	64.0	pcf		distance: origin to sheet pile, d_{sp}:	5.25 ft
length of wall, L:	39.00	ft			

Horizonal Water Force, Hs_{h_FS} (Water is only on the floodside of the wall)

$$Hs_{h\_FS}: F_x = \frac{1}{2}(EL_{500} - EL_{BOT})^2 \gamma_W \left(\frac{\text{kips}}{1000\ \text{lbs}}\right) L$$

$$z = \frac{EL_{BOT} - EL_{500}}{3}$$ (vertical distance from origin to centroid of load)

x = horizontal distance from origin to centroid of load

Downward Water Force, Hs_{V_FS} (Water is only on the floodside of the wall)

$$Hs_{v\_FS}: F_z = A_{FS}(EL_{500} - EL_{BASE})\gamma_w \left(\frac{\text{kips}}{1000\ \text{lbs}}\right)$$

Bracketed Uplift Water Forces, Hs_{NE} and Hs_{NI}

$$Hs_{NE}: F_z = (EL_{BOT} - EL_{500})\gamma_w d_{sp} L$$ Uplift assuming fully effective seepage cuttoff

$$Hs_{NI}: F_z = \frac{1}{2}(EL_{BOT} - EL_{500})\gamma_w WL$$ Uplift assuming fully ineffective seepage cuttoff

Item	Fx (kips)	Fy (kips)	Fz (kips)	x (ft)	y (ft)	z (ft)	Mx (k-ft)	My (k-ft)	Mz (k-ft)
Hs_{h_FS}	525.33					-6.84		-3592.6	
Hs_{v_FS}			417.79	5.04				-2106.4	
Hs_{NE}			-268.85	2.63				705.7	
Hs_{NI}			-435.28	5.67				2466.6	

Figure E.11. Hydrostatic Loads

Wave, Hw									
wave force, Hw = 10.292 kips/ft length of wall, L: 39.00 ft $F_x = Hw * L$ z = vertical distance from origin to wave arm									
Item	Fx (kips)	Fy (kips)	Fz (kips)	x (ft)	y (ft)	z (ft)	Mx (k-ft)	My (k-ft)	Mz (k-ft)
Hw	401.39					-12.351		-4957.4	

Figure E.12. Wave Load

E.7.4. Earth Pressure, EV and EH. The only earth pressures acting on the wall are due to the soil against the sides of the base slab (EH). There is no vertical load due to soil (EV). The lateral earth pressure will not be considered for the following reasons: (1) The soil elevation on both sides of the floodwalls are at the same elevation; (2) The flood event falls under the unusual load condition which has a uniform load factor; (3) During a flood event, it is assumed that the soil on the landside will be saturated; and (4) Pile-founded structures are designed to minimize lateral displacement such that passive resistance of the soil is not engaged.

E.7.5. Earthquake, EQ.

E.7.5.1. The project is located within a Low Hazard Region according to the Seismic Hazard Regions Map included in ER 1110-2-1806. The earthquake ground motions for the design and evaluation of the T-wall are the Operating Basis Earthquake (OBE) and the Maximum Design Earthquake (MDE). The OBE will be determined based on 144 years of return period. Because the floodwall is classified as a critical structure, the MDE ground motion is the same as the maximum credible earthquake (MCE) ground motion. In order to assess if seismic loading is a governing load case, the MCE was assumed to have a 10,000-year return period since no site-specific study has been conducted. Using the USGS Seismic Hazard Maps (2014), the peak ground acceleration modified for the site conditions, using Tables: 20.3-1 Site Classification and 11.8-1 Site Coefficient F_{PGA} of ASCE 7-16 is:

PGA = 0.0178g for the OBE (144-year return period)

Seismic Coefficient (OBE) = 2/3 PGA = 0.0118g

PGA = 0.245g for the MCE (10,000-year return period)

Seismic Coefficient (MCE) = 2/3 PGA = 0.164g

E.7.5.2. Based on the required performance levels, the T-wall should be designed to be serviceable and operable immediately following an OBE event and to not collapse under the MCE (= MDE) event. The appropriate hydraulic loading associated with the OBE and MCE is based on the normal pool water, however, as noted previously, water does not reach the floodwall during normal conditions. Therefore, the T-wall will not be subjected to

hydrodynamic loading. Horizontal loads from other extreme loading conditions will be greater than the MCE load combination. Therefore, seismic loadings will not control design and will not be evaluated further in this example decided by experience structural design engineer.

E.7.6. Impact, IM. The impact load is 500 lb/ft for the region of the Gulf Coast where the wall is located due to the presence of pleasure craft and other waterborne debris and was established based on local USACE District guidance. The area is also not in the vicinity of a navigable waterway and therefore there is not a need to include an aberrant barge impact load. Comparing the below values with the other wave load (Hw), we can see that the horizontal force and corresponding moment are significantly less than the wave force and moment. Since EM 1110-2-2104 requires only one companion load, an Impact case will not be further investigated for foundation analysis. The impact load is shown in Figure E.13.

Impact, IM

impact force, IM = 0.500 kips/ft

length of wall, L: 39.00 ft

$F_x = IM * L$

z = vertical distance from origin to impact load

Item	Fx (kips)	Fy (kips)	Fz (kips)	x (ft)	y (ft)	z (ft)	Mx (k-ft)	My (k-ft)	Mz (k-ft)
IM	19.50					-20.517		-400.08	

Figure E.13. Impact Load

E.7.7. Wind, W.

E.7.7.1. Wind loads during construction must be calculated according to ASCE-7-16 (section 6.15 of Chapter 6). Since the floodwall is considered a critical structure the wind loads must be calculated based on the floodwall being a Risk Category IV structure. This is required in Chapter 6 of this manual and also in Table 1.5-1 of ASCE 7-16 where a Risk Category IV structure includes structures where failure could pose a substantial hazard to the community.

E.7.7.2. Utilize section 29.3 of ASCE 7-16 to calculate the wind load as shown in Figure E.14.

Wind, W

Select Risk Category:	IV		
wind directionality factor, K_d =	0.85		*(use table 26.6-1, ASCE 7)*
Select Exposure Category:	D		
topographic factor, K_{zt} =	1.0		*(26.8.2, ASCE 7)*
G =	0.85		*(26.11.1, ASCE 7)*
K_z =	1.08		*(use figure 29.3-1, ASCE 7)*
basic wind speed, V =	180	mph	

$q_h = q_z = 0.00256 K_z K_{zt} K_d V^2$ (lb/ft^2) *(26.10-1, ASCE 7)*

wall length, B =	39.0	ft
wall height, h =	16.7	ft
vertical dimension of wall, s =	16.7	ft
clearance ratio, s/h =	1.0	
aspect ratio, B/s =	2.34	
force coefficient, C_f =	1.39	*(use figure 29.3-1, ASCE 7)*
$A_f = Bh$ =	650.13	ft^2

$W = F_h = q_h G C_f A_f$ (lbs) *(29.4-2, ASCE 7)*

$$F_x = W\left(\frac{\text{kips}}{1000\ \text{lbs}}\right)$$

z = vertical distance from origin to center of wind force

Item	Fx (kips)	Fy (kips)	Fz (kips)	x (ft)	y (ft)	z (ft)	Mx (k-ft)	My (k-ft)	Mz (k-ft)
W	58.49					-12.2517		-716.57	

Figure E.14. Wind Load

E.7.8. Surcharge Load, ES. A surcharge load is a uniform load of 250 psf that will be applied adjacent to the floodwall during construction to account for heavy equipment that may be working closely to the floodwall.

E.7.9. Load Cases and Load Combinations. The load cases and combinations follow Appendix C.5 as an initial starting point and is further expanded based on the requirements in EM 1110-2-2104 and Chapter 8 of this manual. The load cases identified in Table E.1 consist of only the load cases utilized in design. Other load cases were considered and eliminated through inspection based on the justifications provided under each load type previously discussed and computed. Load case C1A is further expanded to account for bracketed analysis of the seepage and of the pile head fixity resulting in a total of four load cases.

Table E.1
Load Cases and Load Combinations

LC	Load Description	Category	Factored Load Combinations
C1A	Infrequent Surge + Wave	Not considered as explained in paragraph E.7.2.1.	
$C1B_1$	Maximum Surge + Wave *(fully effective cutoff and pinned pile head)*	Unusual	$D + Hs_{NV} + Hs_{NL} + Hs_{NE} + Hw_N$
$C1B_2$	Maximum Surge + Wave *(fully effective cutoff and fixed pile head)*	Unusual	$D + Hs_{NV} + Hs_{NL} + Hs_{NE} + Hw_N$
$C1B_3$	Maximum Surge + Wave *(fully ineffective cutoff and pinned pile head)*	Unusual	$D + Hs_{NV} + Hs_{NL} + Hs_{NI} + Hw_N$
$C1B_4$	Maximum Surge + Wave *(fully ineffective cutoff and fixed pile head)*	Unusual	$D + Hs_{NV} + Hs_{NL} + Hs_{NI} + Hw_N$
C2A	Coincident Pool + OBE	Not considered as explained in section E.7.5.	
C2B	Coincident Pool + MCE	Not considered as explained in section E.7.5.	
C3	Construction	Not considered since the top of base is set at existing grade so no major surcharge load and the lateral wind load is substantially less than the lateral hydrostatic.	
C4	Normal Operating	Not considered since factored wind load does not induce higher shear and moments than factored hydrostatic plus wave.	
C5	Max Differential Head + Impact	Not considered since the impact load is significantly less than the wave load.	

D = Deal load
Hs_{NV} = Unusual vertical water above base
Hs_{NL} = Unusual lateral water on stem and base
Hs_{NE} = Unusual hydrostatic uplift with fully effective seepage cutoff
Hs_{NI} = Unusual hydrostatic uplift with fully ineffective seepage cutoff

E.8. Performance Modes. The pile-founded T-wall design includes the evaluation of the following eight performance modes: bearing and stability; global stability; internal erosion; settlement and downdrag; seismic performance, liquefaction, and cyclic softening; and strength of structural elements.

E.8.1. Bearing and Stability. The pile foundation will be evaluated based on the requirements given in EM 1110-2-2906 and use of USACE CASE program CPGA. The forces and moments for each load case due to unfactored loads are given in Table E.2. Supporting data

for the summary of the load cases in Table E.1, as well as factored loads for each load case, are presented in Tables E.3 through E.4. It should be noted that the coordinate system mimics that used in CPGA where the positive z direction is in the vertical direction with the positive axis down. The x-axis is normal to the stem of the T-wall with the positive direction acting toward the waterside.

Table E.2
Summary of Unfactored Forces and Moments Analyzed

Foundation Loads Summary for Input into CPGA								Pile Head Condition
Load Case	LC #	Fx (kips)	Fy (kips)	Fz (kips)	Mx (k-ft)	My (k-ft)	Mz (k-ft)	
$C1B_1$	1	927	0	799	0	-16,230	0	Pin
$C1B_2$	2	927	0	799	0	-16,230	0	Fix
$C1B_3$	3	927	0	632	0	-14,470	0	Pin
$C1B_4$	4	927	0	632	0	-14,470	0	Fix

Table E.3
Unfactored Loads for LC $C1B_1$, Infrequent Surge + Wave (Fully Effective Case)

1) Load Case $C1B_1$: D + H_{sNV} + H_{sNL} + Hs_{NE} + H_{wN}						
Item	Fx (kips)	Fy (kips)	Fz (kips)	Mx (k-ft)	My (k-ft)	Mz (k-ft)
D			649.6		-6,279.8	
Hs_{NV}			417.8		-2,106.4	
Hs_{NL}	525.3				-3,592.6	
Hw	401.4				-4,957.4	
Hs_{NE}			-268.9		705.7	
Totals:	**927**		**799**		**-16,230**	

Table E.4
Unfactored Loads for LC $C1B_3$, Infrequent Surge + Wave (Fully Ineffective Case)

3) Load Case $C1B_3$: D + H_{sNV} + H_{sNL} + Hs_{NI} + H_{wN}						
Item	Fx (kips)	Fy (kips)	Fz (kips)	Mx (k-ft)	My (k-ft)	Mz (k-ft)
D			649.6		-6,279.8	
Hs_{NV}			417.8		-2,106.4	
Hs_{NL}	525.3				-3,592.6	
Hw	401.4				-4,957.4	
Hs_{NI}			-435.3		2,466.6	
Totals:	**927**		**632**		**-14,470**	

E.8.1.1. The factors of safety for geotechnical pile capacity and the ultimate pile capacities are shown in Table E.5. The factors of safety were determined using EM 1110-2-2906.

Table E.5
Factors of Safety and Capacities Used for CPGA Analyses

Load Case	Factor of Safety (Unusual Condition Verified by PDA)		Ultimate Pile Capacities (kips) Pile Tip at Elevation -100	
	Compression	Tension	Compression	Tension
C1B	1.9	2.25	400	352

E.8.1.2. Two CPGA input files were developed: one for pinned pile heads (LC 1 and 3) and one for fixed pile heads (LC 2 and 4). The CPGA Input File for Load Case 1 and 3 is shown below. For Load Case 2 and 4, the input file is the same, with the exception of line 3700 changing to FIX ALL and updating lines 100, 4600, 4620 and 5100 accordingly.

```
1000 EM 1110.2.2502 EXAMPLE PROBLEM E.1; UNUSUAL CASES, PIN CONDITION
1100 TOW EL. 23.67, TOS EL. 7.0; HP14x89 PILES; TIP 100
1200 BATTER 2 ALL
1300 ANGLE 180 1 TO 6
1400 PILE 1 2 -16.25 0
1500 PILE 2 2 -9.75 0
1600 PILE 3 2 -3.25 0
1700 PILE 4 2 3.25
1800 PILE 5 2 9.75 0
1900 PILE 6 2 16.25 0
2000 PILE 7 8.5 -16.25 0
2100 PILE 8 8.5 -9.75 0
2200 PILE 9 8.5 -3.25 0
2300 PILE 10 8.5 3.25 0
2400 PILE 11 8.5 9.75 0
2500 PILE 12 8.5 16.25 0
2600 PILE 13 15 -16.25 0
2700 PILE 14 15 -9.75 0
2800 PILE 15 15 -3.25 0
2900 PILE 16 15 3.25 0
3000 PILE 17 15 9.75 0
3100 PILE 18 15 16.25 0
3200 PROP 29000 326 904 26.1 0.35 0 ALL
3300 SOIL ES 0.182 TIP 100 0 ALL
3400 PIN ALL
3500 ALLOW H 210 156 651 651 1689 3643 ALL
3600 LOAD 1 927 0 799 0 -16230 0
3700 LOAD 3 927 0 632 0 -14470 0
3800 FOUT 1 2 3 4 5 6 7 PINOUTPUT
3900 PFO ALL
4000 PLB ALL
```

E.8.1.3. Table E.6 shows the results of the CPGA analysis. Max compression, tension, and moment values are taken from local pile forces.

Table E.6
Summary of CPGA Results

CPGA Results Summary									
	C_{max}	Max Compression (kips)			From Pile Capacity Charts				
	T_{max}	Max Tension (kips)			ultimate tension capacity =	-352 kips			
	Δ_x	Lateral Displacement (in)			ultimate compression capacity =	400 kips			
	ALF	Axial Load Factor *(calculated pile axial force / allowable pile load)*							
	CBF	Combined Bending Factor *(axial+weak & strong axis moments / allowable pile strength)*							
	Load Case	LC #	C_{max}	T_{max}	M_{max}	$\Delta_{x\ max}$	ALF_{max}	CBF_{max}	Fixity
Unusual	**$C1B_1$**	1	175.5	95.3	10.9	0.3213	0.84	0.29	Pin
	$C1B_2$	2	152.8	91.9	72.1	0.6478	0.73	0.47	Fix
	$C1B_3$	3	158.4	104.5	18.6	0.4319	0.75	0.26	Pin
	$C1B_4$	4	141.5	101.8	54.8	0.6753	0.67	0.4	Fix

E.8.2. Lateral Deflection Limit State.

E.8.2.1. There are essentially three factors when determining an acceptable amount of lateral deflection. The first factor is based on the load condition and soil-pile interaction. The second factor is differential movement of the walls and the allowable shear movement in the waterstop. The last factor is top of wall deflection to limit flexural cracking.

E.8.2.2. The maximum deflection is 0.68 in. for Load case $C1B_3$. This is less than the suggested limit in Table 8.1 of 0.75 in. and therefore acceptable. Using engineering judgement, differential deflection between monoliths would occur when one undergoes impact. However, this differential will not exceed the max deflection value. Lastly, since the wall reinforcement ratio is designed to satisfy the limit of $0.25\rho_b$, top of wall deflections do not need to be checked.

E.8.2.3. Utilizing a 3-bulb waterstop with a hollow center bulb, the allowable shear movement can be based on the size of the hollow center bulb. Typical dumbbell center-bulb waterstops have an inside diameter of 3/4″. Therefore, for this example, the limit state for lateral deflection of the pile group is 0.75 in. for the unusual load cases. For situational awareness, some tearing will be permitted in the upper portion of the wall during an extreme event (>750 return period). Typical deflection limitation for an extreme event is 1 in. for this waterstop.

E.8.2.4. Serviceability limits states such as deflection and flexural cracking need not be checked according to EM 1110-2-2104 as long as the tension reinforcement ratio does not exceed $0.25\rho_b$. Therefore, analysis will be performed ensuring the tension reinforcement ratio does not exceed $0.25\rho_b$.

E.8.3. Global Stability.

E.8.3.1. The global stability performance mode was assessed to determine whether the soil mass around the T-wall will rotate or translate in the absence of structural support. The computer program SLOPE/W in GeoStudio 2007 (Version 7.23, Build 5099, GeoSlope

International) was used to run the stability analyses for two load conditions: design water level (DWL) and maximum head differential (MAXD).

E.8.3.2. Spencer's limit equilibrium method was used to determine the stability factors of safety. Both undrained (Q) and drained (S) analyses were run for each load condition. The analyses only considered the failure surfaces that passes through the piles, assuming no anchoring support from the piles according to paragraph 8.4.1 of this manual. The analyses did not consider deep failure surfaces that pass below the piles. The analyses considered failure directions toward the landside for the load conditions. Failure toward the waterside during lower water levels may need to be considered for general geotechnical design, but it was not considered necessary in this instance.

E.8.3.3. The site information was assumed to be ordinary for this example. Refer to section E.3 of this example for additional details on site information and Table 8.2 of section 8.4 for factors of safety according to load categories. Table E.7 shows the minimum required factor of safety for ordinary site condition and each load condition.

Table E.7
Minimum Required Global Stability Factor of Safety

Load Condition	Water Elevation on Waterside (ft)	Water Elevation on Landside (ft)	Minimum Required Global Stability Factor of Safety
Maximum Head Differential (MAXD) [500-yr SWL Case]	23.6	4.0	1.4

E.8.4. Initial Slope Stability Analysis.

E.8.4.1. According to section 8.4 of this manual, the critical (lowest factor of safety) non-circular failure surface slope stability analyses were performed for the Q load condition with only water loads acting on the ground surface on the waterside of and beyond the heel of the T-wall because these are the loads the foundation soil must resist to prevent a global stability failure. The slope stability analyses did not include any of the water, soil, or surcharge loads acting directly on the structure because these loads are assumed to be carried by the battered piles to deeper soil layers.

E.8.4.2. If the slope stability factor of safety is less than the minimum required values shown in Table E.7, an unbalanced load is included in the structural analysis of the T-wall system. The unbalanced load is described in Appendix I. No unbalanced load is required if the slope stability analyses meet criteria in Table E.7, because the T-wall foundation piles are not expected to carry additional loading due to slope instability.

E.8.4.3. Table E.8 below summarizes the results of the global stability analyses. Computed factor of safety for all the Q case analyses exceed the minimum required global stability factor of

safety; therefore, an unbalanced force computation was not required. Figures E.15 and E.16 show the undrained (Q) case critical surface results without piles for the DWL and MAXD respectively. Figure E.16 shows the Q case critical failure surface below the piles for the MAXD load case. The red dots in the figure are the trial wedge points that were searched to find the critical failure surface.

Table E.8
Results of Global Stability Analyses Using SLOPE/W

Load Case	Water Elevation (ft)		Minimum Required Factor of Safety	Q Strength	
	Waterside	Landside		Initial	w/ Unb. Load
Maximum Head Differential (MAXD)	23.6	4.0	1.4	2.07	–
Maximum Head Differential (MAXD) – below piles	23.6	4.0	1.4	4.29	–

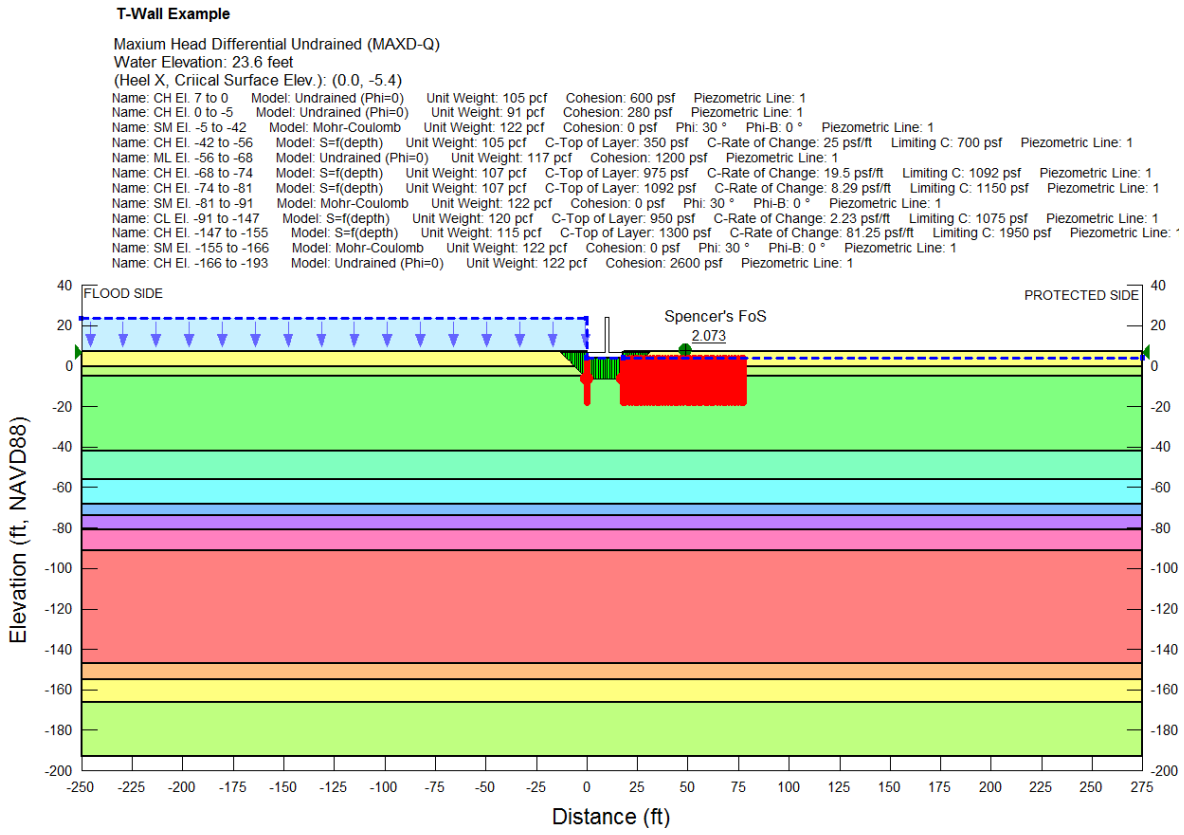

Figure E.15. Global Slope Stability Results – DWL Undrained with Unbalanced Force

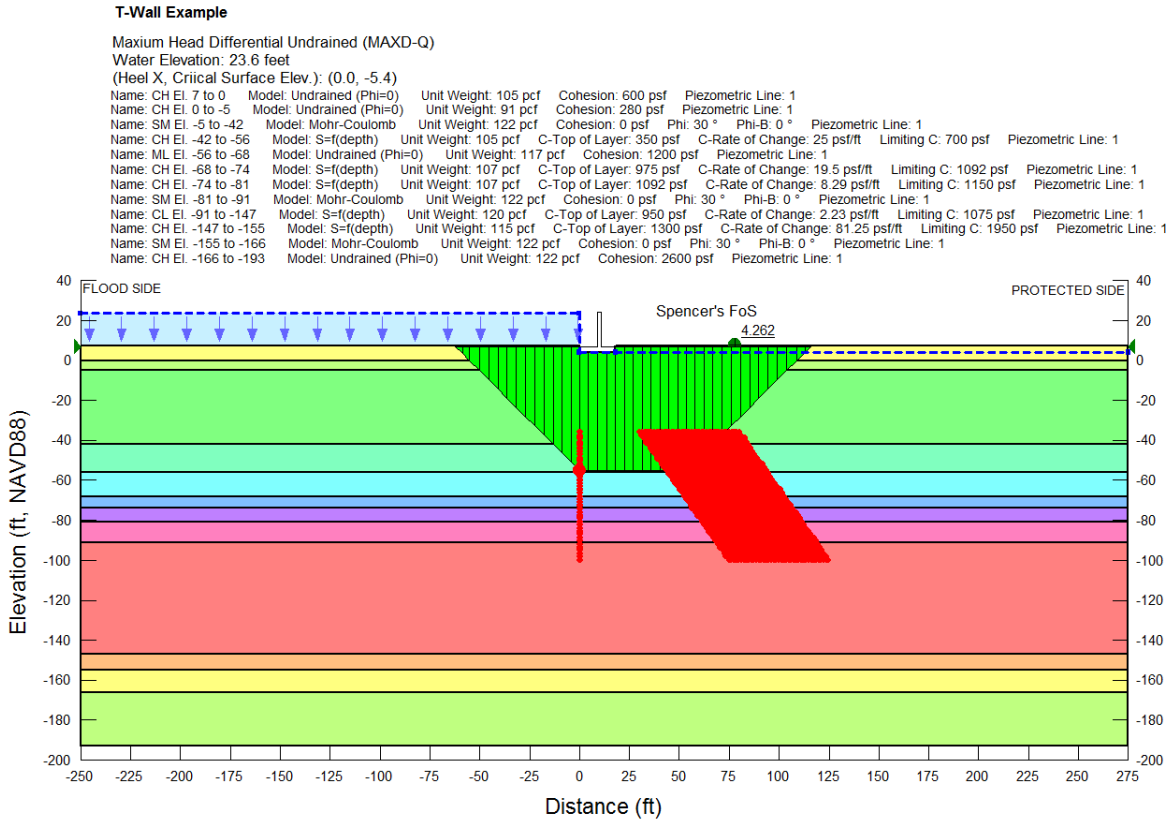

Figure E.16. Global Stability Results – MAXD Undrained – Below Piles

E.8.5. Internal Erosion. Potential Failure Modes due to Internal Erosion are not considered credible for this wall due to several factors that make progression to breach very unlikely. The near-surface clay soils on the waterside are intact so the more pervious underlying silty sands are not directly connected with the source. The loading duration is expected to be short relative to soil permeability and drainage length. The sheet pile under the T-wall extends through the only potentially erodible soil layer in the foundation. The sheet pile also provides a positive cutoff to prevent erosion of soil through any gap that may form between the base of the wall and top of foundations soils.

E.8.6. Settlement and Downdrag. No fill material is to be added, therefore, there will be no substantial grade changes. Since there are no substantial changes to the existing grade, there should be little to no ground settlement adjacent to or below the T-wall and no downdrag loads will exist. The piles under the T-wall are sufficiently deep to prevent T-wall settlement.

E.8.7. Seismic Performance, Liquefaction, and Cyclic Softening. The earthquake ground motions are relatively low so seismic stability was not evaluated. The ground motions will not induce cyclic softening of the clay strata or liquefaction of the sand strata.

E.9. Strength of Structural Elements.

E.9.1. Wall Stem Design and Analysis.

E.9.1.1. The wall stem can be designed independent from the rest of the structure without knowing the pile foundation layout. Designing the stem will provide a closer approximation of the overall dead weight of the structure, thereby reducing the number of iterations necessary in developing the final floodwall geometry. Only the lateral loads acting on the stem are used, and the stem is designed as a cantilever. The parameters used in the design of the stem are as shown in Figure E.17.

Stem Design Parameters				
	f_y =	60	ksi	
	f'_c =	4	ksi	(use 4500 psi if exposed to freeze/thaw)
Height of Wall Stem:	h_w =	16.67	ft	
Modulus of Elasticity of Concrete:	E_c =	3,605	ksi	(ACI 318, 19.2.2.1.b)
Modulus of Elasticity of Steel:	E_s =	29,000	ksi	(ACI 318, 20.2.2.2)
Maximum Allowable Deflection:	Δ =	0.75	in	(Per E.8.2.2)
Strip Width Being Analyzed:	b_w =	12.0	in	
Normal Weight Concrete:	λ =	1.0		(concrete modification factor)
	φ_b =	0.9		(ACI 318, Table 21.2.1)
	φ_v =	0.75		(ACI 318, Table 21.2.1)

Figure E.17. Stem Design Parameters

E.9.1.2. The shears and moments to be used in the design are calculated in Figure E.18. This is based on information developed in section E.7 above.

Stem Lateral Loads & Load Combination

Designer's Note: The dead weight of the wall stem is neglected for determining the flexural and shear strength of the wall stem. This will result in a more conservative design.

Hydrostatic Weight of Water = 0.064 k/ft^3

Hydrostatic, Hs_{NL} = 8.818 kpf

Hydrodynamic	Force (kpf)		Arm (ft)
Hw_N =	10.29	@	-8.43

Load Cases, Combinations & Forces

$$Hs_N: F_x = LF * Hs_{NL}$$

$$Hw_N: F_x = LF * Hw_N$$

z = vertical distance from top of base to centeroid of load

1) Load Case C1B: $H_{sNL} + H_{wN}$		**LF**	**Fx** (kips)	**z** (ft)	**My** (k-ft)
500 yr hydrostatic	H_{sN}	1.6	14.11	-5.53	-78.07
Wave	H_{wN}	1.6	16.47	-8.43	-138.88
factored totals per foot length of wall:			30.58		-216.95

Figure E.18. Stem Lateral Loads and Load Combination

E.9.1.3. From E.9.1.2, the factored shear is 30.58 kips. Utilizing the previously estimated wall stem thickness of 32 in. with no use of shear reinforcement, the computation is as shown in figure E.19.

Check Shear			
EM 1110-2-2104 states to compute V_c in accordance with ACI unless noted otherwise in section 5.2 thru 5.4.			
Clear cover =	4	in	(Table 2-1, EM 1110-2-2104)
Previously estimated stem thickness, t =	2.67	ft	
Assumed bar diameter, d_b =	1.41	in	
Depth to reinforcement, d =	27.30	in	
Factored shear at base of stem, V_u =	30.58	k/ft	
width of contact surface, b_w =	9.00	in	
concrete modification factor, λ =	1.00		(use normal weight)
shear strength reduction factor, ϕ =	0.75		(ACI 318 Table 21.2.1)
coefficient of friction, μ =	1.00		(ACI 318 Table 22.9.4.2)
f'_c =	4,000	psi	
fy =	60,000	psi	
Shear friction at Joint:			
reinforcement area, A_{vf} =	1.56	in^2	*(the reinforcement required for flexural will be used on the compression face of the wall stem which is used for shear friction calculation)*
$V_n = \mu A_{vf} f_y$			
V_n =	93.6	kips	
V_n shall not exceed the least of: $0.2f'_cA_c$ =	196.5	kips	
V_n shall not exceed the least of: $(480+0.8f'_c)A_c$ =	904.0	kips	(ACI 318 Table 22.9.4.4)
V_n shall not exceed the least of: $1600A_c$ =	393.0	kips	
ϕV_n =	70.20	kips	
Check $\phi V_n \geq V_u$:	**OK**		
Concrete Shear Strength:			
$V_c = 2\lambda\sqrt{f'_c}\, b_w d$			
$V_n = V_c$ =	41.43	kips	
ϕV_n =	31.07	kips	
Check $\phi V_n \geq V_u$:	**OK**		

Figure E.19. Shear Check

E.9.1.4. The reinforcement required must now be determined. The minimum and maximum reinforcing is first determined as shown in Figure E.20.

Check Flexure

Compute A_s: assume a = 0.25d

$$A_s = \frac{M_u}{\varphi f_y \left(d - \frac{a}{2}\right)}$$

A_s = 2.019 in^2

Check $A_s > A_{s,min}$

Check 1: $A_{s,min} = 3(\sqrt{f'_c})b_w d/f_y$

$A_{s,min}$ = 1.036 in^2

Check 2: $A_{s,min} = 200 b_w d/f_y$

$A_{s,min}$ = 1.092 in^2

Try No. 11 Bars

A_n = 1.56 in^2

d_b = 1.41 in

Spacing Required: 9.27

use spacing, s = 9.00 in

A_{s_prov} = 2.080 in^2/ft length

OK

Check Reinforcement Ratio:

$\rho < 0.25\rho_b$

$$\beta_1 = 0.85 - \frac{0.05(f'_c - 4{,}000)}{1{,}000}$$

β_1 = 0.85

$$0.25\rho_b = 0.25\left(0.85\beta_1 \frac{f'_c}{f_y}\left(\frac{87{,}000}{87{,}000 + 60{,}000}\right)\right)$$

$0.25\rho_b$ = 0.007127

$$\rho = \frac{A_s}{bd}$$ ρ = 0.00635

check $\rho < 0.25\rho_b$ **OK**

Recompute a:

$$a = \frac{A_s f_y}{0.85 f'_c b}$$

a = 3.059 in

Recompute M_n & φM_n:

M_n = 268.0 k-ft

φM_n = 241.2 k-ft

M_u = 217.0 k-ft

Check $\varphi M_n \geq M_u$: **OK**

Figure E.20. Flexure Check

E.9.1.5. Also find the minimum temperature and shrinkage reinforcement required. The monolith length of the wall is between 30–40 ft. EM 1110-2-2104, Table 2-3, requires the minimum reinforcement ratio to be 0.004 in the longitudinal direction. EM 1110-2-2104 requires all other temperature and shrinkage reinforcing to have a minimum reinforcement ratio of 0.003.

E.9.1.6. So, the required minimum area of reinforcement in the longitudinal direction (the length of the monolith) is:

$$A_s = 0.004bh = 0.004*(12\text{ in})*(32\text{ in}) = 1.536\text{ in}^2/\text{ft}$$

E.9.1.7. The 1.536 in^2/ft is the total reinforcing required in both faces and so 0.768 in^2/ft of reinforcing is required as a minimum in each face in the longitudinal direction. This is provided by a number 8 bar spaced at 12 in. center-to-center.

E.9.1.8. Since the wall stem acts like a cantilever, the shear and moment will be reduced at locations above the base slab and it would be possible to taper the wall stem to reduce the volume of concrete. The stem is not tapered in this case because the wall would only be tapered to a width of 2 ft. and the reduction in the volume of concrete would be minimal.

E.9.1.9. Reducing the amount of reinforcing part of the way up the stem can also be considered. Based on the analysis shown in Figure E.21, an area reduction of approximately 50 percent would occur at elevation 15.0 ft.

Determine Reinforcement Reduction Location					
Recompute strip width based on reinforcement spacing:			b_w =	9 in	
Determine where along the wall stem can the primary reinforcement be reduced.					
EL.	arm	M_u	$A_{s,reqd}$	$1.33A_{s,reqd}$	
7.00	16.67	162.71	1.1355	1.5102	
8.00	15.67	152.95	1.0674	1.4196	
9.00	14.67	143.19	0.9993	1.3290	
10.00	13.67	133.43	0.9311	1.2384	
11.00	12.67	123.67	0.8630	1.1478	
12.00	11.67	113.91	0.7949	1.0572	
13.00	10.67	104.15	0.7268	0.9666	
14.00	9.67	94.39	0.6587	0.8760	
15.00	8.67	84.63	0.5906	0.7854	#8 bar
16.00	7.67	74.87	0.5224	0.6949	
17.00	6.67	65.11	0.4543	0.6043	
18.00	5.67	55.34	0.3862	0.5137	#7 bar
19.00	4.67	45.58	0.3181	0.4231	
20.00	3.67	35.82	0.2500	0.3325	
21.00	2.67	26.06	0.1819	0.2419	
22.00	1.67	16.30	0.1138	0.1513	
23.00	0.67	6.54	0.0456	0.0607	
23.67	0	0.00	0.0000	0.0000	

Figure E.21. Determination of Reinforcement Reduction Location

E.9.2. Base Design and Analysis.

E.9.2.1. The base is designed to transfer all the forces from the stem and all the forces acting on the base to the piles and then to the soils. In order to obtain reactions that were based on the applied load factors defined for each load case, the CPGA analyses are performed again using the factored loads. The pile reactions obtained from these analyses are used in the strength design of the base slab.

E.9.2.2. The CPGA output using the factored loads was reviewed and the load cases that had the highest pile reactions were used to check the design. Both pinned and fixed cases were analyzed with the controlling cases ending up being LC1 and LC3. For simplicity, only LC1 and LC3 are being further expanded. The free-body diagrams for both load cases are shown in paragraph E.9.2.4. The design of the base slab assumes that the slab is fixed at the face of the wall stem. This is a reasonable assumption since the base section between the floodwall stem faces can be considered integral with the stem and therefore acts stiff in relation to the portions of the base outside the stem face. Figure E.22 shows the CPGA global pile reactions for LC1 and LC3.

CPGA Global Pile Reactions for Pinned Pile Head

* PILE TOP REACTIONS * LC1

PILE	FOR X (kips)	FOR Y (kips)	FOR Z (kips)	MOM X, (kip-in)	MOM Y, (kip-in)	MOM Z, (kip-in)
********	********	********	********	********	********	********
1	44.0	0.0	-84.9	0.0	0.0	0.0
2	44.0	0.0	-84.9	0.0	0.0	0.0
3	44.0	0.0	-84.9	0.0	0.0	0.0
4	44.0	0.0	-84.9	0.0	0.0	0.0
5	44.0	0.0	-84.9	0.0	0.0	0.0
6	44.0	0.0	-84.9	0.0	0.0	0.0
7	32.8	0.0	60.9	0.0	0.0	0.0
8	32.8	0.0	60.9	0.0	0.0	0.0
9	32.8	0.0	60.9	0.0	0.0	0.0
10	32.8	0.0	60.9	0.0	0.0	0.0
11	32.8	0.0	60.9	0.0	0.0	0.0
12	32.8	0.0	60.9	0.0	0.0	0.0
13	77.7	0.0	157.2	0.0	0.0	0.0
14	77.7	0.0	157.2	0.0	0.0	0.0
15	77.7	0.0	157.2	0.0	0.0	0.0
16	77.7	0.0	157.2	0.0	0.0	0.0
17	77.7	0.0	157.2	0.0	0.0	0.0
18	77.7	0.0	157.2	0.0	0.0	0.0

* PILE TOP REACTIONS * LC3

PILE	FOR X (kips)	FOR Y (kips)	FOR Z (kips)	MOM X, (kip-in)	MOM Y, (kip-in)	MOM Z, (kip-in)
********	********	********	********	********	********	********
1	49.6	0.0	-93.1	0.0	0.0	0.0
2	49.6	0.0	-93.1	0.0	0.0	0.0
3	49.6	0.0	-93.1	0.0	0.0	0.0
4	49.6	0.0	-93.1	0.0	0.0	0.0
5	49.6	0.0	-93.1	0.0	0.0	0.0
6	49.6	0.0	-93.1	0.0	0.0	0.0
7	33.3	0.0	58.2	0.0	0.0	0.0
8	33.3	0.0	58.2	0.0	0.0	0.0
9	33.3	0.0	58.2	0.0	0.0	0.0
10	33.3	0.0	58.2	0.0	0.0	0.0
11	33.3	0.0	58.2	0.0	0.0	0.0
12	33.3	0.0	58.2	0.0	0.0	0.0
13	71.6	0.0	140.2	0.0	0.0	0.0
14	71.6	0.0	140.2	0.0	0.0	0.0
15	71.6	0.0	140.2	0.0	0.0	0.0
16	71.6	0.0	140.2	0.0	0.0	0.0
17	71.6	0.0	140.2	0.0	0.0	0.0
18	71.6	0.0	140.2	0.0	0.0	0.0

Figure E.22. CPGA Global Pile Reactions for Pinned Pile Head

E.9.2.3. The design strip is based on the pile side spacing of 6.5 ft. Since the overall monolith length is based on this spacing, the edge pile results will be used in the analysis. This is illustrated in Figure E.23.

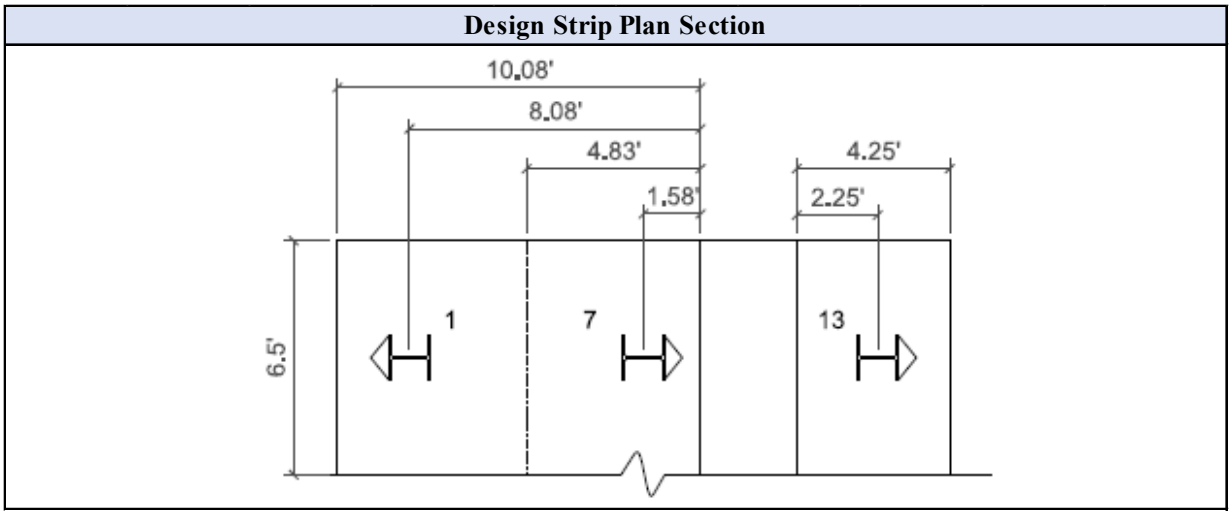

Figure E.23. Design Strip Plan Section

E.9.2.4. Figures E.24 and E.25 show the conversion of the vertical hydrostatic loading into equivalent concentrated loads on the heel side. For LC1 in Figure E.24, since the landside water is set at the bottom of the base and the sheet pile cutoff is assumed fully effective no vertical water is applied to the toe. Shear and moment need to be checked at the pile locations, but for this example the focus will be at the stem face.

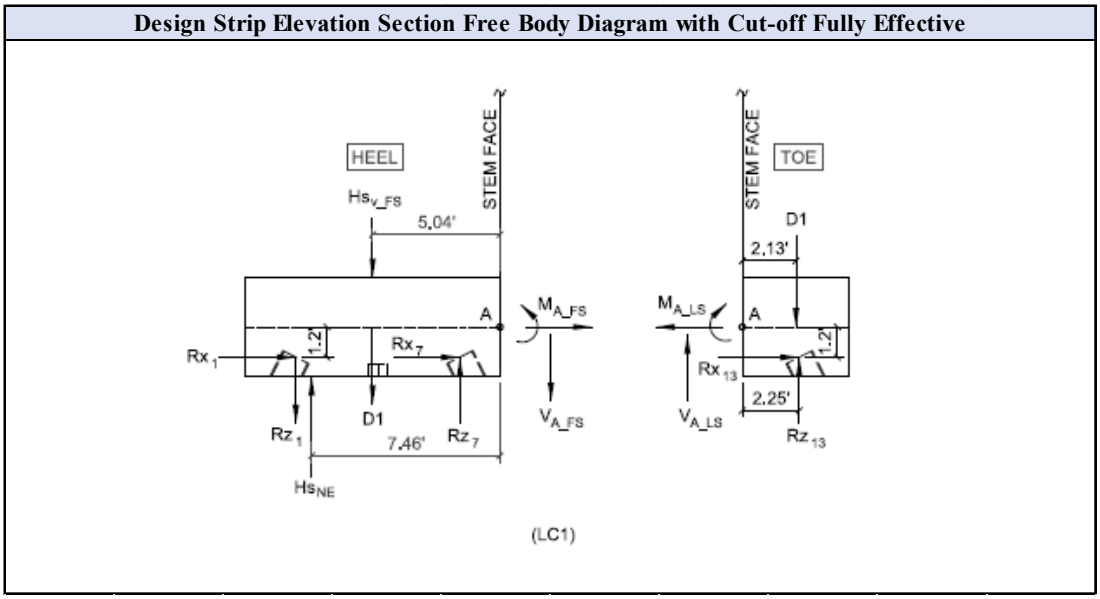

Figure E.24. Design Strip Elevation Section Free Body Diagram for LC1

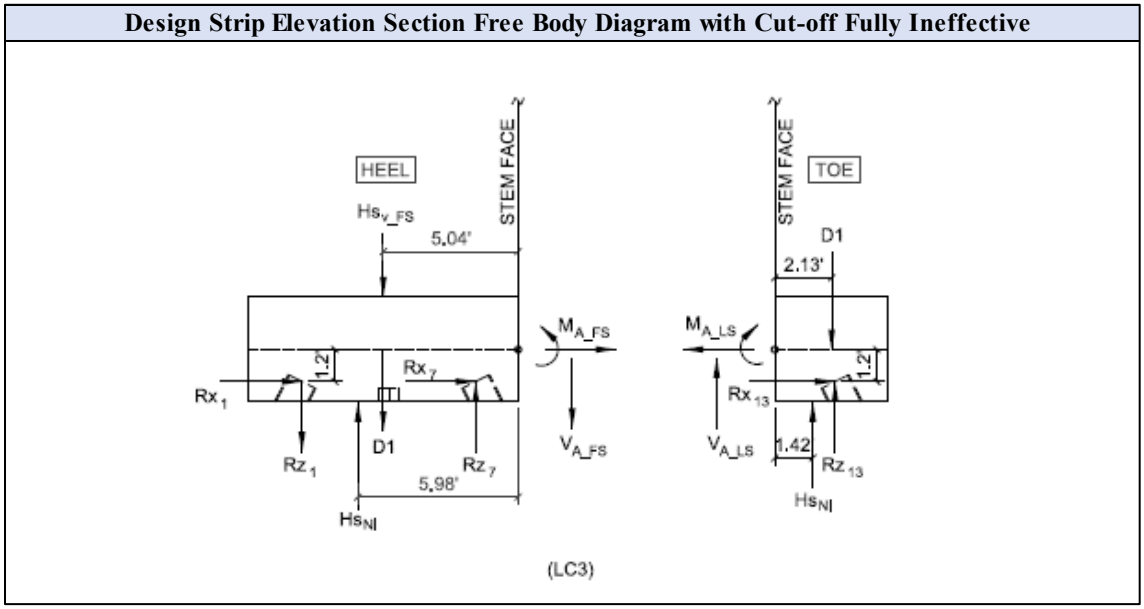

Figure E.25. Design Strip Elevation Section Free Body Diagram for LC3

E.9.2.5. The calculations in Figures E.26 through E.29 determine the heel side and toe side moments of the base utilizing the free body diagrams in paragraph E.9.2.4.

Determine Moment and Shear about Point "A" for LC1

500 yr. SWL EL. =	23.6 ft	salt water, γ_w =	64.0 pcf
Top of Base EL. =	7.00 ft	strip width =	6.5 ft
Bot. of Base EL. =	3.08 ft		
$Hs_{v\_FS\_1}$ =	6.91 kpf		
HEEL length =	10.08 ft		
$1.6Hs_{v\_HEEL}$ =	111.37 kips	*(equivalent concentrated force)*	
$1.6D1_{HEEL}$ =	61.59 kips	*(equivalent concentrated force)*	
$1.6D1_{TOE}$ =	25.97 kips	*(equivalent concentrated force)*	
LC1, $1.6Hs_{NE}$ =	71.69 kips	*(equivalent concentrated force)*	
LC1, Rz_1 =	84.9 kips		
LC1, Rz_7 =	60.9 kips	LC1, Rz_{13} =	157.2 kips
LC1, Rx_1 =	44.0 kips	LC1, Rx_{13} =	77.7 kips
LC1, Rx_7 =	32.8 kips		

$$\sum M_y = 0, \qquad positive\ counterclockwise$$

$$M_y + 5.04Hs_{v\_FS} + 8.08Rz_1 + 5.04D1 - 1.58Rz_7 - 7.46Hs_{NI} + 1.2Rx_1 + 1.2Rx_7 = 0$$

LC1, M_A = -1018.83 kip-ft LC1, V_A = -125.27 kips

$$\sum M_y = 0, \qquad positive\ clockwise$$

$$M_y - 2.25Rz_{13} + 2.13D1 - 1.2Rx_{13} = 0$$

LC1, M_A = 391.63 kip-ft LC1, V_A = -131.23 kips

Figure E.26. Determination of Moment and Shear About Point “A” for LC1

Determine Moment and Shear about Point "A" for LC3

TOE length = 4.25 ft

$1.6D1_{HEEL}$ = 61.59 kips *(equivalent concentrated force)*

$1.6D1_{TOE}$ = 25.97 kips *(equivalent concentrated force)*

$1.6Hs_{v\_HEEL}$ = 111.37 kips *(equivalent concentrated force)*

LC3, $1.6Hs_{NI\_TOE}$ = 7.26 kips *(equivalent concentrated force)*

LC3, $1.6Hs_{NI\_HEEL}$ = 96.84 kips *(equivalent concentrated force)*

LC3, Rz_1 = 93.1 kips

LC3, Rz_7 = 58.2 kips

LC3, Rx_1 = 49.6 kips

LC3, Rx_7 = 33.3 kips

LC3, Rz_{13} = 140.2 kips

LC3, Rx_{13} = 71.6 kips

$$\sum M_y = 0, \quad positive\ counterclockwise$$

$$M_{A\_FS} + 5.04Hs_{v\_FS} + 8.08Rz_1 + 5.04D1 - 1.58Rz_7 - 5.98Hs_{NI} + 1.2Rx_1 + 1.2Rx_7 = 0$$

LC3, M_A = -1052.37 kip-ft

LC3, V_A = -111.02 kips

$$\sum M_y = 0, \quad positive\ clockwise$$

$$M_{A\_LS} - 2.25Rz_{13} + 2.13D1 - 1.42Hs_{NI} - 1.2Rx_{13} = 0$$

LC3, M_A = 356.36 kip-ft

LC3, V_A = -114.23 kips

Figure E.27. Determination of Moment and Shear About Point “A” for LC3

Determine Primary Reinforcement

Both the top and bottom primary reinforcement will be the same. Therefore only the ultimate absolute moment will be used and the shortest "d". Values are based on strip width of 6.5'.

M_u =	1,052 k-ft	f_y =	60 ksi
b_w =	78.0 in	f'_c =	4 ksi
clear cover =	4 in	E_c =	3,605 ksi
base thickness =	3.92 ft	E_s =	29,000 ksi
pile embedment =	1.2 ft	λ =	1.0
highest point on pile =	1.016 ft	ϕ =	0.9
vertical pile driving tollerance =	3 in		
d =	31.1775 in		

assume a = 0.25d

$$A_s = \frac{M_u}{\varphi f_y \left(d - \frac{a}{2}\right)}$$

A_s = 8.573 in^2

Check $A_s > A_{s,min}$

Check 1: $A_{s,min} = 3(\sqrt{f'_c})b_w d/f_y$

$A_{s,min}$ = 7.690 in^2

Check 2: $A_{s,min} = 200 b_w d/f_y$

$A_{s,min}$ = 8.106 in^2

Try No. 10 Bars

A_n = 1.27 in^2

d_b = 1.27 in

# of Bars Required: 6.75

use = 7.00

A_s = 1.368 in^2/ft length

spacing, s = 11.14 in

use s = 9.00 in *(match stem reinforcement spacing)*

OK

A_{s_prov} = 11.007 in^2

M_n = 1501.3 k-ft

φM_n = 1351.2 k-ft

Check $\varphi M_n \geq M_u$: **OK**

Figure E.28. Determination of Primary Reinforcement

Check Shear		
$V_c = 2\lambda\sqrt{f'_c}\,b_w d$		
f'_c =	4,000	psi
ϕ =	0.75	
V_c =	308	kips
φV_c =	230.7	
Check $\varphi V_c \geq V_u$:	**OK**	

Figure E.29. Shear Check

E.9.2.6. Also find the minimum temperature and shrinkage reinforcement required, as shown in Figure E.30. The monolith length of the wall is 39 ft., as shown in Figure E.6. EM 1110-2-2104 requires the minimum reinforcement ratio to be 0.004 in the transverse direction.

Determine Transverse Temperature & Shrinkage Reinforcement			
base thickness, t =	47.0000	in	
b_w =	12	in	*(strip width)*
A_g =	564	in^2	
$A_{T\&S} = 0.004A_g$ =	2.256	in^2	*(mono length between 30-40 ft)*
1/2 in each face =	1.128	in^2	
(Greater than max permitted per EM 1110-2-2104, therefore use #9 bars @ 12" max spacing)			

Figure E.30. Determination of Transverse Temperature and Shrinkage Reinforcement

E.9.2.7. The slab also needs to be checked for punching shear from the pile acting on the base slab. Based on criteria in ACI 318-14, sections 22.6.4 and 22.6.5 the two-way shear (or punching shear) should be calculated based on the least value of equations a, b, c, as shown in Figure E.31.

Check Punching Shear					
v_c			β =	1.0652	
Least of (a), (b), and (c):	$4\lambda\sqrt{f'_c}$	(a)	α_s =	20	corner
				30	edge
	$\left(2+\frac{4}{\beta}\right)\lambda\sqrt{f'_c}$	(b)		40	interior
	$\left(2+\frac{\alpha_s d}{b_o}\right)\lambda\sqrt{f'_c}$	(c)	(a)	252.98	psi
			(b)	363.98	psi
			(c)	343.52	psi
perimeter of critical section, b_0 =		181.71	in		
max factored axial compression load =		175.3	kips		
φV_c =(0.75*252.98psi*b_0*d)/1000 =		1,075	kips		
Check $\varphi V_c \geq V_u$:		**OK**			

Figure E.31. Punching Shear Check

E.9.3. Pile Head Anchor Design

E.9.3.1. The first step in design of the pile head anchors used to resist pullout of the pile is to determine the type, size, quantity, and embedment depth. Based on the maximum absolute factored tension load being greater than half the maximum factored compression load, it is recommended to start the anchor design utilizing ASTM A706 reinforcement with 180 deg. hooked ends. The anchors should be fully developed into the base, starting from the top of the pile. The rebar anchors attached to the pile head are to be treated as anchor reinforcement according to ACI 318 where the pile acts as the anchor and the rebar as the anchor reinforcement. The design of tension anchors is illustrated in Figure E.32.

Pile Head Anchor Design

When designing the tension anchors of battered piles, use the factored pile reactions based on local axis as shown below. The below values are from the tension row.

Load Case	LC #	T_u	V_u	M_u
C1B$_1$	1	95.6	1.4	NA
C1B$_2$	2	95.4	2.0	25.8
C1B$_3$	3	105.4	2.7	NA
C1B$_4$	4	105.2	3.0	18.7

where:

ψ_e = 1.0

λ = 1.0

ASTM A706, Gr. 60, f_{ya} = 60000 psi

$1.9f_{ya}$ = 114000 psi

min. tensile strength, f_{uta} = 80000 psi

f'_c = 4000 psi

Max Factored Tension Capacity Required, N_{ua} =	105.4	kips	
Select Bar Size =	7		
d_b =	0.875	in	
$A_{se,N}$ =	0.60	in^2	
Number of Tension Hooks per Pile Req'd =	2.93		$N_{ua}*1000/(f_{ya}*A_s)$
use minimum:	4	bars	
Check Nominal Strength of anchors in tension, N_{sa} =	192	kips	
Φ =	0.75		
ΦN_{sa} =	144	kips	$\Phi N_{sa} \geq N$ **OK**

Figure E.32. Pile Head Anchor Design

E.9.3.2. The second step is to check concrete breakout strength when the pile is loaded in tension. The breakout will likely start at the anchor base plate or bottom of the rebar anchor. Since the pile is minimally embedded, it is likely that the concrete breakout will occur. Therefore, the rebar anchors will need to be fully developed above the breakout surface which is assumed to occur at the top of the pile. Alternatively, headed rebar can be used in which case the breakout surface will be at the head of the rebar.

E.9.3.3. The third step is to check the anchor reinforcement for shear across the breakout surface. Based on the local axis shear values, this can be intuitively determined satisfactory.

E.9.3.4. The fourth step is to check the tension due to the force couple of the fixed pile head moment to ensure the anchor reinforcement does not fail. This is shown in Figure E.33. LC2 results in the highest ultimate tension force on a single anchor. Based on these results, the rebar anchor reinforcement had to be increased by one bar size.

Check Anchor Reinforcement for Due to Fixed Head Moment Force Couple

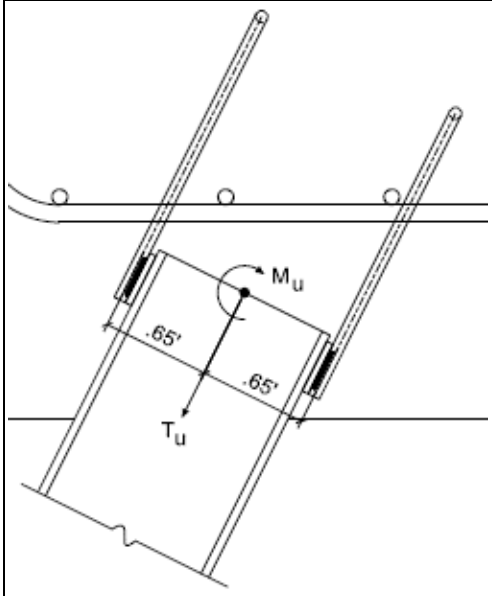

T_u =	95.4	kips
M_u =	25.8	k-ft
$T_u/4$ =	23.9	kips
$M_u/0.65$ =	39.7	kips
over 2 anchors =	19.8	kips
ultimate tension on anchor, N =	43.7	kips
cross-sectional area of anchor, A_{se} =	0.60	in^2
nominal strength of single anchor, N_{sa} =	48.0	kips
ΦN_{sa} =	36.0	kips
Since N>ϕN_{sa}, try larger bar.		
Try #:	8	bar
d_b =	1	
A_{se} =	0.79	in^2
ΦN_{sa} =	47.4	kips
hook development length, l_{dh} =	$(0.02\psi_e f_{ya}/\lambda\sqrt{(f'_c)})d_b$	
reinforcement coating factor, ψ_e =	1.0	
concrete modification factor, λ =	1.0	
l_{dh} =	18.97	in
use minimum:	20	in

Figure E.33. Anchor Reinforcement Check for Due to Fixe Head Moment Force Couple

E.9.3.5. The last step is to design the welds, as shown in Figures E.34 and E.35. Generally, it is advisable to shop weld the rebar anchors to plates and field weld the plates to the pile.

Anchor Weld Design

Per AWS D1.4

$$R_n = 0.60 F_{EXX} \left(\frac{\sqrt{2}}{2}\right)\left(\frac{D}{16}\right) l$$

S =	4	*1/8 of an inch*
F_{EXX} =	70 ksi	
0.4S =	1.6	
D = 2(0.4S)2 =	6.4	*1/16 of an inch*
use D =	7	*1/16 of an inch*
weld length per bar, l =	6 in	*(half on each side of bar)*
R_n =	77.96 kips	
φ =	0.75	
φR_n =	58.47 kips	
number of bars, N =	4	
φR_n*N=	233.88 kips	
check φR_n*N ≥ T_u:	**OK**	

Figure E.34. Anchor Weld Design

Anchor Weld Design (cont'd)

Weld Plate to HP

D =	4		F_u =	65 ksi *(A709)*
l =	12.00 in		t_{min} =	0.3042 in
φR_n =	66.82 kips		*Min. base metal thickness required for block shear rupture per AISC (9-2)*	
check $\varphi R_n \geq T_u/2$:	**OK**			

The 50ksi plate does not need to be checked for shear and buckling. The plate will be welded continuosly all around. Failure of the weld has to occur before failure of the plate.

Final Tension Anchor Design

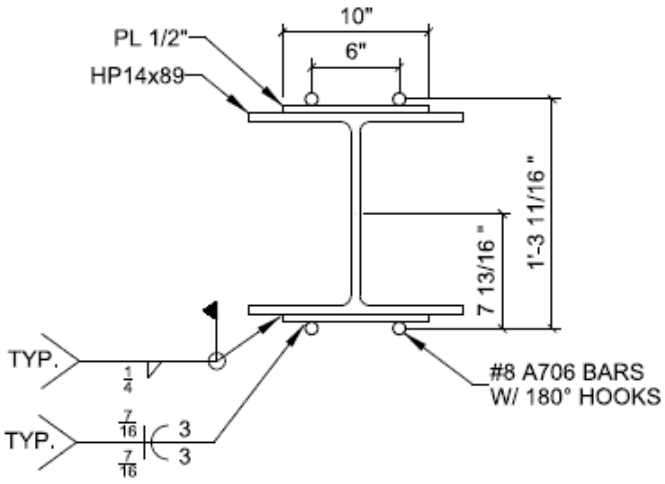

Figure E.35. Anchor Weld Design

E.10. Final Design. A section showing the final design is provided in Figure E.36.

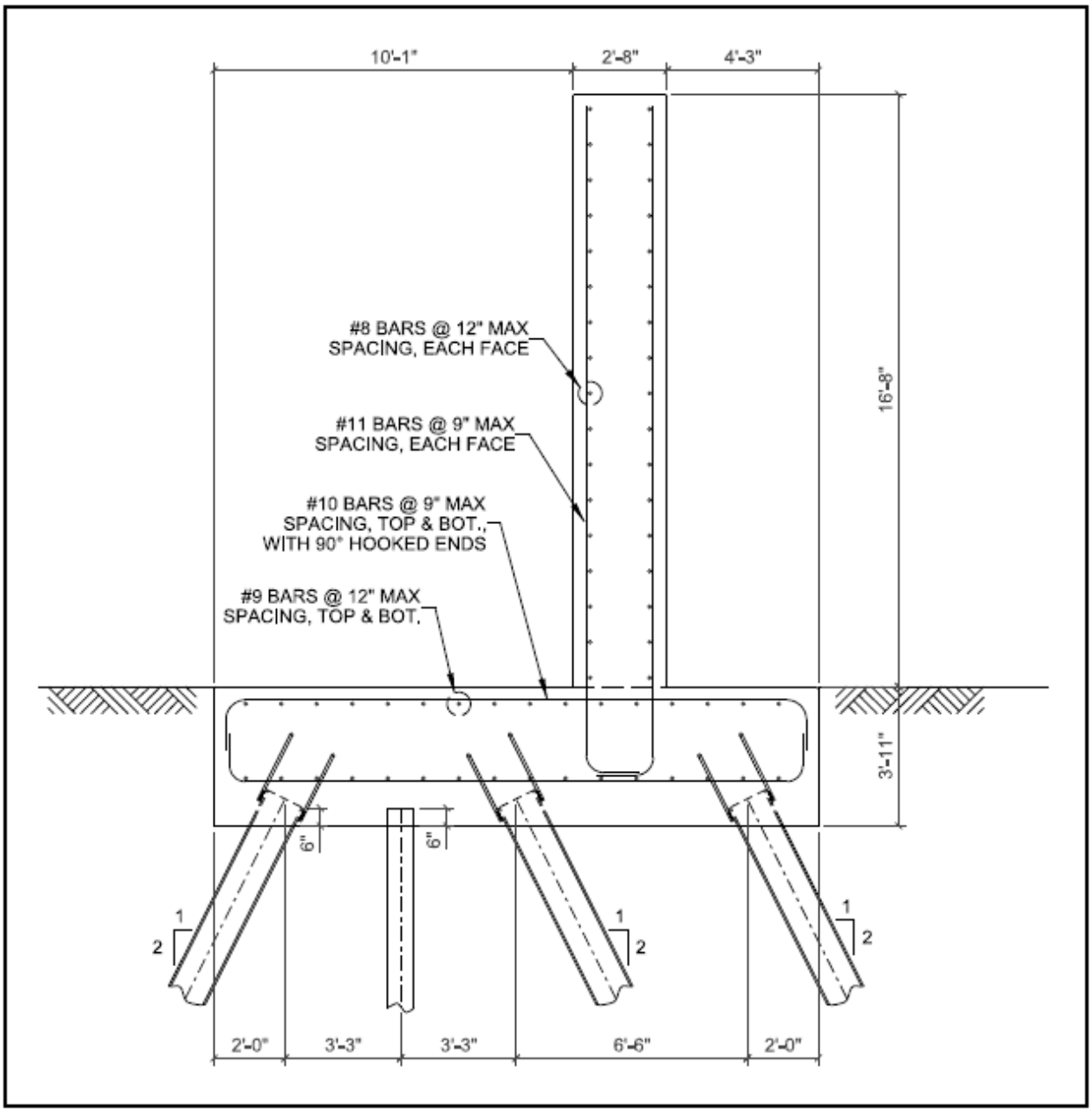

Figure E.36. Final Design Section of Pile-Founded Coastal Floodwall

Appendix F
Design Example – Cantilever I-Wall with Riverine Flood Load

F.1. Problem Statement.

F.1.1. A small town with a mixture of residential and commercial structures has a population of approximately 5,000 residents or workers and is located at the confluence of a non-navigable stream and a major navigable waterway, which has exceeded flood stage on many occasions. The design and construction of a 4-mile-long flood risk management system has been authorized. This system will include an I-wall and other structural features to minimize property damage. The authorized protection level is a 150-year event (0.67 percent annual chance of exceedance with 50 percent assurance). Figure F.1, Partial Site Plan, shows the I-wall portion of the project. Figure F.2 presents a Flood Hazard Curve for the median flood frequency with a schematic cross section of the I-wall at the 150-year and 264-year (overtopping) events.

F.1.2. An I-wall is the only feasible structural alternative for that portion of the project located along a stretch of town that closely encroaches upon the river bank. The I-wall is located on the coastline of the non-navigable river and is designed to have one foot of superiority above the top of containment. The I-wall project has advanced to the pre-construction phase. The flood control project includes a controlled overtopping section to minimize the risk of catastrophic failure and subsequent loss of life, but that section is not located within the length of I-wall. The controlled overtopping section allows the leveed area to flood, but not the I-wall section, such that the maximum differential head at the I-wall occurs with water at the top of the wall.

F.1.3. The project is located within the Low Seismic Hazard Region as delineated in the Seismic Hazard Regions Map included in ER 1110-2-1806.

F.1.4. The I-wall in this example will be designed according to Chapter 9, Analysis and Design – Cantilever Pile Walls.

F.1.5. English units are used in this example. See Appendix A for metric conversions.

F.2. Structure Classification. According to section 3.2.1. of this manual and Appendix H of EM 1110-2-2100, the floodwall is a Critical structure. Failure of the floodwall prior to overtopping the system could directly or indirectly lead to loss of life (Appendix H of EM 1110-2-2104, paragraph H-2.d).

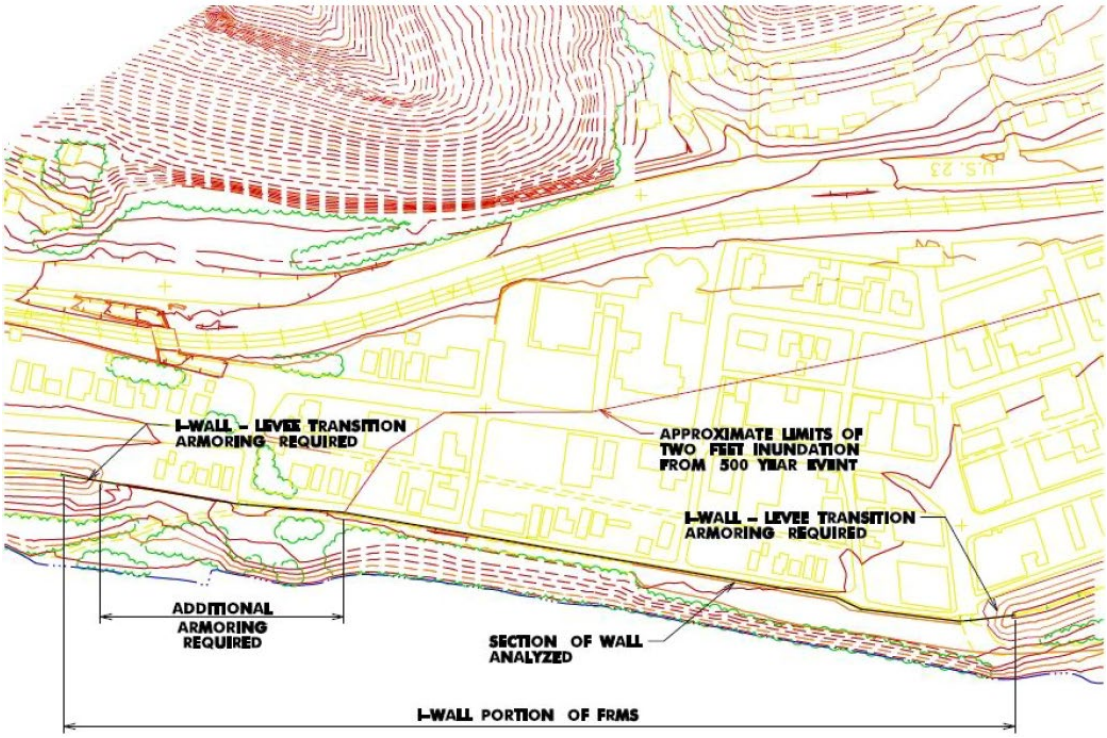

Figure F.1. Partial Site Plan

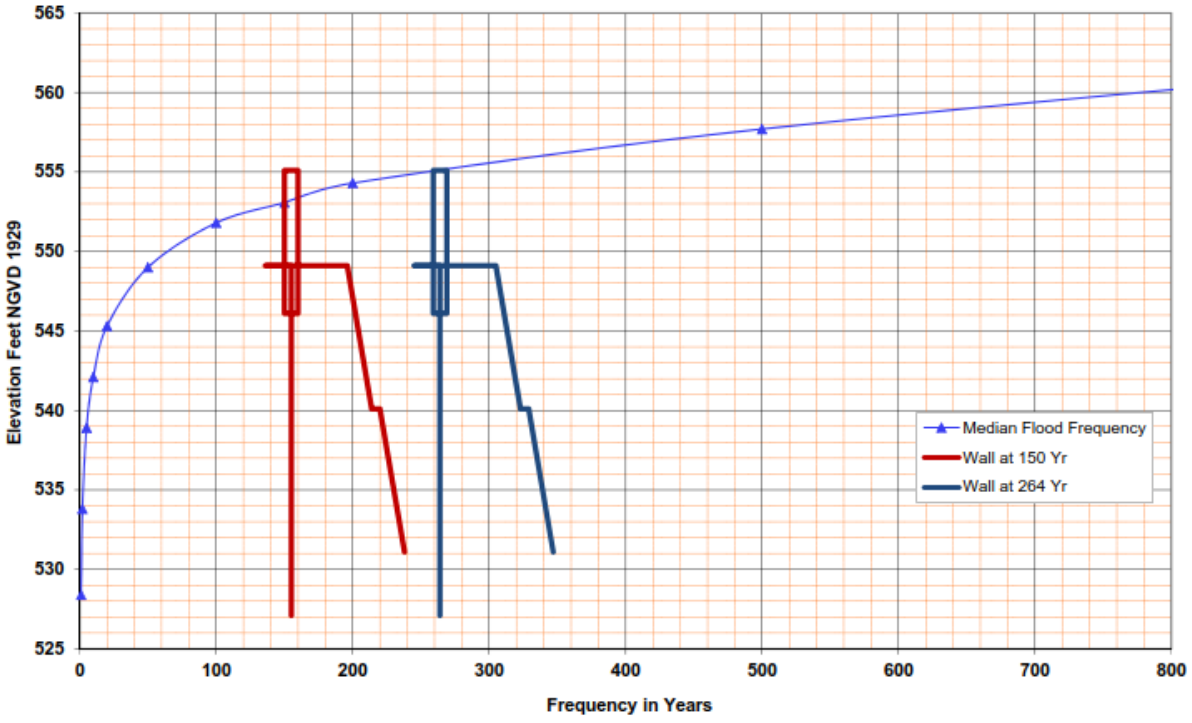

Figure F.2. Flood Hazard Curve

F.3. Site Information.

F.3.1. Site Information Category. The site information category is Ordinary. Design factors of safety will reflect this site information category. Geotechnical field explorations and laboratory testing showed only small variations in the soil column throughout the project site. The I-wall is a new structure. Soil types and strata thicknesses were fairly consistent along the proposed wall alignment.

F.3.2. Topography and Bathymetry. A new survey provided sufficient topographic and bathymetric data to develop appropriate reach selections and analysis cross sections.

F.3.3. Geology. A geologic map assessment was performed at an earlier stage to determine the scope of the geotechnical field exploration and laboratory testing.

F.3.4. Reach Selection and Analysis Cross Sections. Based on the topography, bathymetry, geology, and hydraulic conditions, the I-wall section of the flood control system was divided into appropriate reaches and analysis cross sections. Figure F.3 represents the critical cross section for the I-wall.

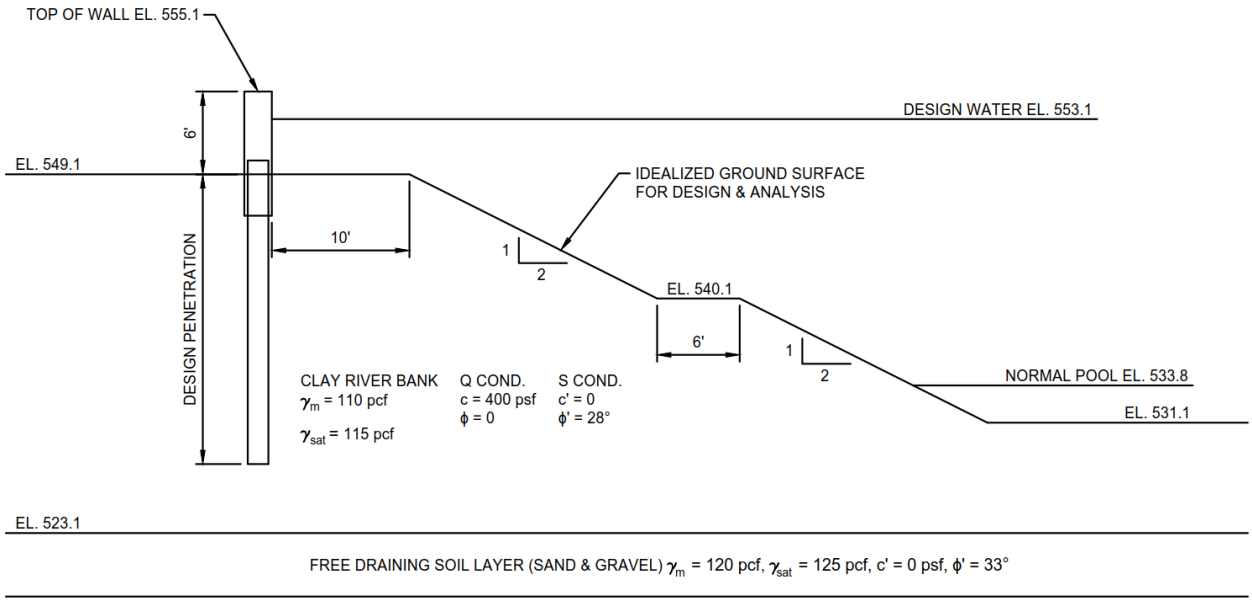

Figure F.3. Idealized Cross Section for Design

F.3.5. Frost Depth. The frost depth at this site was determined to be 24 in.

F.3.6. Geotechnical Parameters. A geotechnical investigation was performed according to recommendations in Chapter 5. The design unit weight and shear strength values are presented in Figure F.3. The design shear strength values were selected such that approximately two-thirds of the data were above the design value and one-third of the data were below the design value. The design unit weight is the average value of all the data. The flood duration is longer than one

or two days and therefore it is not certain that an undrained condition will be maintained during the loading. Therefore, a bracketed design will be performed using both Q and S soil strength parameters.

F.3.7. Environmental. Corrosion testing, including pH measurement, electrical conductivity, and chloride and sulfate ion measurement, indicated that the soils and pore fluid are non-corrosive to concrete and metal. There are no known contaminants at the project site.

F.4. Loads.

F.4.1. The I-wall is located at the riverbank crest at elevation 549.1 ft. The I-wall will be subject to the following loads: Dead, Hydrostatic and Groundwater, Debris Impact, Earth Pressure, and Earthquake.

F.4.2. Dead, D. The dead load of the I-wall consists of the concrete and steel material. This is a usual, permanent load.

F.4.3. Hydrostatic, H. Hydrostatic and groundwater loads include water forces above and below ground and seepage forces. The median flood frequency curve is used for design for various water elevations. Figure F.2 shows a plot of this curve in terms of water elevation versus frequency (return period). Figure F.2 also shows a schematic outline of the I-wall at the 150-year and 246-year (overtopping) return periods. The following river levels will be considered to determine hydrostatic and groundwater loads:

F.4.3.1. Normal Operating Level (NO) – pool elevation 533.8 ft. (usual, permanent load).

F.4.3.2. Design Water Level (DWL) – 150-year water elevation 553.1 ft. (unusual, temporary load).

F.4.3.3. Maximum Head Differential (MAXD) – 264-year, top of wall elevation 555.1 ft. (unusual, temporary load).

F.4.4. Earth Pressure, EH.

F.4.4.1. Lateral active and passive pressures are based on the soil parameters provided in Figure F.3. The earth pressures include the effect of interface friction between the soil and the wall. The interface friction values include adhesion parameters (c_a) for the undrained clay layer (Q) analysis and interface friction angles (δ') for drained clay layer (S) and sand and gravel layer (Q,S) analyses. Below are design parameters with references:

F.4.4.1.1. Undrained clay layer: $c_a = 0.5$ (400 psf) = 200 psf (section 6.7.5.4.2, $c_a/s_u \leq 0.5$).

F.4.4.1.2. Drained clay layer pressures: $\delta' = 0.5\ \phi' = 0.5\ (28°) = 14°$ (Table 6.2).

F.4.4.1.3. Sand and gravel layer: $\delta' = 22°$ Table 6.2 (coarse sand on rough steel).

F.4.4.1.4. Note that many designs are performed with $\delta' = 0$ and $c_a = 0$. This results in a greater required sheet pile depth and higher design forces in the sheet pile, but not excessively so.

F.4.4.2. Earth pressures are calculated in the rotational stability (CWALSHT) analyses. Note that CWALSHT performs analysis using upper bound charts of Caquot & Kerisel (1948) (log-spiral), so no limitations are required for δ' per section 6.7.6.4.

F.4.5. Earthquake, EQ.

F.4.5.1. The project is located within a Low Hazard Region according to the Seismic Hazard Regions Map included in ER 1110-2-1806. The earthquake ground motions for the design and evaluation of the I-wall are the Operating Basis Earthquake (OBE) and the Maximum Design Earthquake (MDE). Because the I-wall is classified as a critical structure, the MDE ground motion is the same as the maximum credible earthquake (MCE) ground motion (assumed 10,000-year return period). Based on the soil profile, the Site Class is E. Using the USGS Seismic Hazard Maps (2014), the peak ground acceleration modified for the site conditions is:

PGA = 0.037g for the OBE (144-year return period)

PGA = 0.337g for the MCE (10,000-year return period)

F.4.5.2. According to section 6.9.6, the seismic coefficients for preliminary seismic stability analysis using the seismic coefficient method are the following:

Seismic Coefficient (OBE) = 2/3 PGA = 0.025

Seismic Coefficient (MCE) = 2/3 PGA = 0.225

F.4.5.3. Based on the required performance levels, the I-wall should be designed to be serviceable and operable immediately following an OBE event and to not collapse under the MCE (= MDE) event. The appropriate hydraulic loading associated with the OBE and MCE is based on the normal pool water, the elevation of which is more than 15 ft. below the bottom of the exposed floodwall. Therefore, the I-wall will not be subjected to hydrodynamic loading. Horizontal loads from other extreme loading conditions are greater than the MCE load combination. Therefore, seismic loadings will not control design and will not be evaluated further in this example.

F.4.6. Debris Impact, IM. The waterway is parallel to the I-wall and is located in a steep wooded valley. Therefore, a debris impact load of 500 lb/ft was chosen to represent a drifting recreational boat or a large fallen tree trunk. This load is assumed to be appropriate for application coincident with the flood case.

F.4.7. Load Cases and Combinations. Three load cases were developed as a part of the planning process for the project: Normal Operating (NO), Design Water Level (DWL), and

Maximum Head Differential (MAXD). Table F.1 lists the load combinations for the three load cases.

Table F.1
Load Combinations for Cantilever I-Wall

Load Case	Load Description	Load Category	Load Combination
I1	Normal Operating (NO)	Usual	EH
I2	Design Water Level (DWL)	Unusual	EH + Hs + IM
I3	Maximum Head Differential (MAXD)	Unusual	EH + Hs + IM

F.4.7.1. Loading Condition I1. Normal Operating. Normal operating water level is at elevation 533.8 ft., which is more than 15 ft. below the exposed face of the I-wall. This water level does not load the wall and therefore will not be investigated.

F.4.7.2. Loading Condition I2. Design Water Level. The authorized design water level is at elevation 553.1 ft., the 150-year flood event. For this water level, the pumping capacity and reliability are adequate to maintain the landside groundwater at ground surface (elevation 549.1 ft.). This load case will include the debris impact of 500 lb/ft at elevation 553.1 ft. to account for recreational boats drifting into the wall or large fallen tree trunks hitting the wall. The load combination and load category for the Design Water Level condition, I2, is identical to that for the Maximum Head Differential condition, I3, with the exception that the hydrostatic surcharge (Hs) is 2 ft. higher for I3. Hence, I3 will control the design to satisfy the performance mode evaluation requirements. Therefore, the I2 case will not be evaluated and presented.

F.4.7.3. Loading Condition I3. Maximum Head Differential. The maximum head differential represents a rising river with water at the top of the wall (elevation 555.1 ft.) and the landside groundwater at ground surface (elevation 549.1 ft.). This flood level has a 264-year return period. This case is the maximum flooding level expected without any flooding taking place on the landside of the wall that could reduce the differential head condition on the wall. This load case will include the debris impact load of 500 lb/ft at 555.1 ft.

F.5. Performance Modes. The I-wall design includes the evaluation of the following six performance modes: rotational stability, global stability, internal erosion, settlement, liquefaction and cyclic softening, and strength of structural elements. The design is described in the following sections. In addition to these performance modes that are affected by the presence of the wall, the profile should also be checked for rapid drawdown stability. Rapid drawdown slope stability analyses are described in EM 1110-2-1902 and criteria for rapid drawdown for levee systems is listed in EM 1110-2-1913.

F.6. Rotational Stability.

F.6.1. The I-wall depth and resisting soil strength govern the rotational stability of the I-wall. Adequate wall penetration into the soil will prevent rotational failure. The USACE CASE program CWALSHT (Version date 4/21/15) was used to evaluate rotational stability. A factor of safety of 1.5 was applied to the passive pressure according to section 9.3.5. No factor of safety was applied to the active pressure. For the S-case analysis, seepage type was selected as Automatic with a seepage elevation at the ground surface at elevation 549.1 ft. For the Q-case analyses the seepage type was set to none. Table F.2 summarizes the CWALSHT results.

Table F.2
Results of I-Wall Rotational Stability Analysis Using CWALSHT

Load Case	Load Category	Shear Strength	Factor of Safety	Waterside Water Elevation (ft)	Landside Water Elevation (ft)	Required Penetration (ft)
I3	Unusual	Undrained, Q	1.5	555.1	549.1	12.2
		Drained, S				20.4

F.6.2. Table F.2 indicates that the minimum required sheet piling penetration is approximately 20 ft. based on the maximum head differential load case with drained shear strength (I3 MAXD S). Therefore, the sheet piling will penetrate to at least elevation 529.1 ft. for this section of the I-wall. The maximum gap depth is the point of zero net pressure on the sheet piling. The global stability analysis, section F.7 below, incorporates the maximum gap depth.

F.6.3. The following are the CWALSHT inputs, outputs, and graphics for the critical load case, I3 MAXD S. Net water pressure is shown in Figure F.4. Earth pressures are shown in Figures F.5 and F.6. Net Soil Pressure is shown in Figure F.7.

CWALSHT Output:

```
PROGRAM CWALSHT-DESIGN/ANALYSIS OF ANCHORED OR CANTILEVER SHEET PILE WALLS
                          BY CLASSICAL METHODS
  DATE: 12-FEBRUARY-2020                                    TIME: 18:34:26

                             ***************
                             *  INPUT DATA  *
                             ***************

       I.--HEADING
      'EM 1110-2-2502 ENGINEERING AND DESIGN, FLOODWALLS AND OTHER HYDRAULIC RETAINING WALLS -
EXAMPLE
      'I3 MAXD S - MAXIMUM HEAD DIFFERENTIAL WATER LEVEL S-CONDITION SHEET PILING PENETRATION

      II.--CONTROL
         CANTILEVER WALL DESIGN
         FACTOR OF SAFETY FOR ACTIVE PRESSURES  = 1.00
         FACTOR OF SAFETY FOR PASSIVE PRESSURES = 1.50

     III.--WALL DATA
         ELEVATION AT TOP OF WALL    = 555.10 FT

      IV.--SURFACE POINT DATA

           IV.A.--RIGHTSIDE
              DIST. FROM     ELEVATION
              WALL (FT)        (FT)
                  10.00        549.10
                  28.00        540.10
                  34.00        540.10
                  52.00        531.10

           IV.B.--LEFTSIDE
              DIST. FROM     ELEVATION
              WALL (FT)       (FT)
                  50.00        549.10

       V.--SOIL LAYER DATA

          V.A.--RIGHTSIDE
              LEVEL 2 FACTOR OF SAFETY FOR ACTIVE PRESSURE  = DEFAULT
              LEVEL 2 FACTOR OF SAFETY FOR PASSIVE PRESSURE = DEFAULT

                ANGLE OF         ANGLE OF                          <-SAFETY->
  SAT.   MOIST  INTERNAL  COH-     WALL    ADH-    <--BOTTOM-->  <-FACTOR->
 WGHT.   WGHT.  FRICTION  ESION  FRICTION  ESION   ELEV.  SLOPE  ACT. PASS.
 (PCF)   (PCF)    (DEG)   (PSF)    (DEG)   (PSF)   (FT)  (FT/FT)
115.00  110.00    28.00    0.00    14.00    0.00  523.10   0.00   DEF  DEF
125.00  120.00    33.00    0.00    22.00    0.00                   DEF  DEF

          V.B.--LEFTSIDE
              LEVEL 2 FACTOR OF SAFETY FOR ACTIVE PRESSURE  = DEFAULT
              LEVEL 2 FACTOR OF SAFETY FOR PASSIVE PRESSURE = DEFAULT

                ANGLE OF         ANGLE OF                          <-SAFETY->
  SAT.   MOIST  INTERNAL  COH-     WALL    ADH-    <--BOTTOM-->  <-FACTOR->
 WGHT.   WGHT.  FRICTION  ESION  FRICTION  ESION   ELEV.  SLOPE  ACT. PASS.
 (PCF)   (PCF)    (DEG)   (PSF)    (DEG)   (PSF)   (FT)  (FT/FT)
115.00  110.00    28.00    0.00    14.00    0.00  523.10   0.00   DEF  DEF
125.00  120.00    33.00    0.00    22.00    0.00                   DEF  DEF

      VI.--WATER DATA
         UNIT WEIGHT         = 62.40 (PCF)
         RIGHTSIDE ELEVATION = 555.10 (FT)
         LEFTSIDE ELEVATION  = 549.10 (FT)
```

```
          SEEPAGE ELEVATION   = 549.10 (FT)
          SEEPAGE GRADIENT    = AUTOMATIC

      VII.--VERTICAL SURCHARGE LOADS
          NONE

     VIII.--HORIZONTAL LOADS

          VIII.A.--HORIZONTAL LINE LOADS
               ELEVATION     LINE LOAD
                  (FT)         (PLF)
                555.10        500.00

          VIII.B.--HORIZONTAL DISTRIBUTED LOADS
               NONE



  PROGRAM CWALSHT-DESIGN/ANALYSIS OF ANCHORED OR CANTILEVER SHEET PILE WALLS
                           BY CLASSICAL METHODS
  DATE: 12-FEBRUARY-2020                                    TIME: 18:34:29

                           *************************
                           *   SOIL PRESSURES FOR   *
                           * CANTILEVER WALL DESIGN *
                           *************************

      I.--HEADING
       'EM 1110-2-2502 ENGINEERING AND DESIGN, FLOODWALLS AND OTHER HYDRAULIC RETAINING WALLS -
EXAMPLE
       'I3 MAXD S - MAXIMUM HEAD DIFFERENTIAL WATER LEVEL S-CONDITION SHEET PILING PENETRATION

     II.--SOIL PRESSURES

          RIGHTSIDE SOIL PRESSURES DETERMINED BY SWEEP SEARCH WEDGE METHOD.

          LEFTSIDE SOIL PRESSURES DETERMINED BY COULOMB COEFFICIENTS
          AND THEORY OF ELASTICITY EQUATIONS FOR SURCHARGE LOADS.

          SOIL PRESSURES ARE REPORTED FOR A SEEPAGE GRADIENT = 0.0001
          AND MAY CHANGE WITH AUTOMATIC ADJUSTMENT OF THE GRADIENT.

                                      <------NET------>
           NET    <---LEFTSIDE--->     (SOIL + WATER)     <--RIGHTSIDE--->
  ELEV.   WATER   PASSIVE   ACTIVE    ACTIVE   PASSIVE    ACTIVE   PASSIVE
  (FT)    (PSF)     (PSF)    (PSF)     (PSF)     (PSF)     (PSF)     (PSF)
  555.1     0.0       0.0      0.0       0.0       0.0       0.0       0.0
  554.1    62.4       0.0      0.0      62.4      62.4       0.0       0.0
  553.1   124.8       0.0      0.0     124.8     124.8       0.0       0.0
  552.1   187.2       0.0      0.0     187.2     187.2       0.0       0.0
  551.1   249.6       0.0      0.0     249.6     249.6       0.0       0.0
  550.1   312.0       0.0      0.0     312.0     312.0       0.0       0.0
  549.1   374.4       0.0      0.0     374.4     374.4       0.0       0.0
  548.1   374.4     131.9     16.7     259.1     489.7      16.7     132.0
  547.1   374.4     263.9     33.3     143.8     605.1      33.3     264.0
  546.1   374.4     395.8     50.0      28.5     720.4      50.0     396.0
  545.9   374.4     428.4     54.1       0.0     748.9      54.1     428.6
  545.1   374.4     527.8     66.6     -86.8     835.7      66.6     528.0
  544.1   374.3     659.7     83.3    -202.1     581.9      83.3     290.9*
  543.1   374.3     791.7     99.9    -317.4     590.0      99.9     315.6*
  542.1   374.3     923.6    116.6    -432.7     735.8     116.6     478.1*
  541.1   374.3    1055.6    133.2    -548.0     779.9     133.2     538.8*
  540.1   374.3    1187.5    149.9    -663.3     825.8     149.9     601.5*
  539.1   374.3    1319.5    166.6    -778.6     873.7     166.5     666.0*
  538.1   374.3    1451.4    183.2    -894.0     923.6     183.2     732.6*
```

```
 537.1   374.3    1583.3    199.9   -1009.3     975.6     199.8     801.2*
 536.1   374.2    1715.3    216.5   -1124.6    1029.8     216.5     872.1*
 535.1   374.2    1847.2    233.2   -1240.4    1086.2     232.6     945.2*
 534.1   374.2    1979.2    249.8   -1356.5    1145.0     248.4    1020.7*
 533.1   374.2    2111.1    266.5   -1473.7    1206.3     263.3    1098.6*
 532.1   374.2    2243.1    283.1   -1592.6    1270.2     276.3    1179.1*
 531.1   374.2    2375.0    299.8   -1712.0    1234.2     288.9    1159.9*
 530.1   374.2    2507.0    316.5   -1831.4    1183.1     301.4    1125.4*
 529.1   374.2    2638.9    333.1   -1950.1    1329.2     314.7    1288.2
 528.1   374.1    2770.9    349.8   -2067.6    1519.1     329.1    1494.7
 527.1   374.1    2902.8    366.4   -2185.7    1565.0     343.0    1557.3
 526.1   374.1    3034.7    383.1   -2305.0    1582.2     355.7    1591.2
 525.1   374.1    3166.7    399.7   -2424.2    1717.7     368.4    1743.4
 524.1   374.1    3298.6    416.4   -2543.5    1759.2     381.1    1801.5
 523.1+  374.1    3430.6    433.0   -2978.8    6189.0     629.7    6199.1
 523.1-  374.1    4534.6    335.3   -2978.8    6189.0     629.7    6199.1
 522.1   374.1    4742.2    350.6   -3559.1    9772.2     809.0    9748.8
 521.1   374.1    4949.7    366.0   -3824.7    8666.4     751.0    8658.3
 520.1   374.0    5157.3    381.3   -4022.0    8360.7     761.3    8368.0
 519.1   374.0    5364.9    396.7   -4218.1    8094.7     772.8    8117.4
 518.1   374.0    5572.4    412.0   -4413.3    7777.0     785.1    7815.0
         * STANDARD WEDGE SOLUTION DOES NOT EXIST FOR INDICATED PRESSURE
           FOR THIS ELEVATION.


  PROGRAM CWALSHT-DESIGN/ANALYSIS OF ANCHORED OR CANTILEVER SHEET PILE WALLS
                           BY CLASSICAL METHODS
  DATE: 12-FEBRUARY-2020                                    TIME: 18:34:30

                        ****************************
                        *  SUMMARY OF RESULTS FOR  *
                        *  CANTILEVER WALL DESIGN  *
                        ****************************

      I.--HEADING
       'EM 1110-2-2502 ENGINEERING AND DESIGN, FLOODWALLS AND OTHER HYDRAULIC RETAINING WALLS -
EXAMPLE
       'I3 MAXD S - MAXIMUM HEAD DIFFERENTIAL WATER LEVEL S-CONDITION SHEET PILING PENETRATION

     II.--SUMMARY

          RIGHTSIDE SOIL PRESSURES DETERMINED BY SWEEP SEARCH WEDGE METHOD.

          LEFTSIDE SOIL PRESSURES DETERMINED BY COULOMB COEFFICIENTS
          AND THEORY OF ELASTICITY EQUATIONS FOR SURCHARGE LOADS.

          *****WARNING:  STANDARD WEDGE SOLUTION DOES NOT EXIST
                         AT ALL ELEVATIONS.  SEE COMPLETE OUTPUT.

     WALL BOTTOM ELEV. (FT)     :      528.71
           PENETRATION (FT)     :       20.39

     MAX. BEND. MOMENT (LB-FT)  :  2.2239E+04
           AT ELEVATION (FT)    :      539.13

     MAX. SCALED DEFL. (LB-IN^3):  7.2252E+09
           AT ELEVATION (FT)    :      555.10

     SEEPAGE GRADIENT           :     0.1466

               NOTE:  DIVIDE SCALED DEFLECTION MODULUS OF
                      ELASTICITY IN PSI TIMES PILE MOMENT
                      OF INERTIA IN IN^4 TO OBTAIN DEFLECTION
                      IN INCHES.
```

PROGRAM CWALSHT-DESIGN/ANALYSIS OF ANCHOREDOR CANTILEVER SHEET PILE WALLS
BY CLASSICAL METHODS
DATE: 12-FEBRUARY-2020 TIME: 18:34:30

****
* COMPLETE OF RESULTS FOR *
* CANTILEVER WALL DESIGN *
****

I.--HEADING
'EM 1110-2-2502 ENGINEERING AND DESIGN, FLOODWALLS AND OTHER HYDRAULIC RETAINING WALLS - EXAMPLE
'I3 MAXD S - MAXIMUM HEAD DIFFERENTIAL WATER LEVEL S-CONDITION SHEET PILING PENETRATION

II.--RESULTS

ELEVATION (FT)	BENDING MOMENT (LB-FT)	SHEAR (LB)	SCALED DEFLECTION (LB-IN^3)	NET PRESSURE (PSF)
555.10	0.0000E+00	500.	7.2252E+09	0.00
554.10	5.1040E+02	531.	6.7347E+09	62.40
553.10	1.0832E+03	625.	6.2451E+09	124.80
552.10	1.7808E+03	781.	5.7573E+09	187.20
551.10	2.6656E+03	999.	5.2727E+09	249.60
550.10	3.8000E+03	1280.	4.7927E+09	312.00
549.10	5.2464E+03	1623.	4.3193E+09	374.40
548.10	7.0388E+03	1944.	3.8551E+09	266.64
547.10	9.0979E+03	2156.	3.4030E+09	158.88
546.10	1.1316E+04	2261.	2.9667E+09	51.12
545.63	1.2392E+04	2274.	2.7663E+09	0.00
545.10	1.3585E+04	2259.	2.5499E+09	-56.64
544.10	1.5797E+04	2148.	2.1566E+09	-164.40
543.10	1.7845E+04	1930.	1.7906E+09	-272.16
542.10	1.9621E+04	1604.	1.4554E+09	-379.92
541.10	2.1017E+04	1170.	1.1540E+09	-487.68
540.10	2.1926E+04	629.	8.8891E+08	-595.44
539.10	2.2238E+04	-21.	6.6159E+08	-703.20
538.10	2.1848E+04	-778.	4.7259E+08	-810.96
537.10	2.0647E+04	-1643.	3.2124E+08	-918.73
536.95	2.0386E+04	-1784.	3.0141E+08	-935.11
536.10	1.8566E+04	-2476.	2.0543E+08	-698.15
535.10	1.5787E+04	-3035.	1.2160E+08	-418.70
534.10	1.2590E+04	-3314.	6.4991E+07	-139.24
533.10	9.2533E+03	-3313.	3.0118E+07	140.21
532.10	6.0569E+03	-3033.	1.1255E+07	419.66
531.10	3.2802E+03	-2474.	2.9186E+06	699.12
530.10	1.2026E+03	-1635.	3.5103E+05	978.57
529.10	1.0354E+02	-517.	2.3889E+03	1258.03
528.71	0.0000E+00	0.	0.0000E+00	1367.98

NOTE: DIVIDE SCALED DEFLECTION MODULUS OF
ELASTICITY IN PSI TIMES PILE MOMENT
OF INERTIA IN IN^4 TO OBTAIN DEFLECTION
IN INCHES.

III.--WATER AND SOIL PRESSURES

		<----------SOIL PRESSURES---------->			
	WATER	<----LEFTSIDE----->		<---RIGHTSIDE---->	
ELEVATION (FT)	PRESSURE (PSF)	PASSIVE (PSF)	ACTIVE (PSF)	ACTIVE (PSF)	PASSIVE (PSF)
555.10	0.	0.	0.	0.	0.
554.10	62.	0.	0.	0.	0.
553.10	125.	0.	0.	0.	0.
552.10	187.	0.	0.	0.	0.

551.10	250.	0.	0.	0.	0.
550.10	312.	0.	0.	0.	0.
549.10	374.	0.	0.	0.	0.
548.10	356.	109.	14.	20.	155.
547.10	338.	218.	28.	39.	310.
546.10	320.	327.	41.	59.	465.
545.63	311.	379.	48.	68.	538.
545.10	301.	436.	55.	78.	620.
544.10	283.	545.	69.	98.*	341.
543.10	265.	654.	83.	117.*	370.
542.10	246.	763.	96.	137.*	561.
541.10	228.	872.	110.	156.*	632.
540.10	210.	981.	124.	176.*	706.
539.10	191.	1090.	138.	195.*	782.
538.10	173.	1199.	151.	215.*	860.
537.10	155.	1308.	165.	235.*	940.
536.95	152.	1325.	167.	238.*	953.
536.10	137.	1417.	179.	254.*	1024.
535.10	118.	1526.	193.	273.*	1109.
534.10	100.	1635.	206.	292.*	1198.
533.10	82.	1744.	220.	309.*	1290.
532.10	63.	1853.	234.	324.*	1384.
531.10	45.	1962.	248.	339.*	1361.
530.10	27.	2071.	261.	354.*	1321.
529.10	8.	2180.	275.	369.	1565.
528.71	1.	2231.	282.	376.	1662.
528.10	0.	2302.	291.	385.	1693.

* STANDARD WEDGE SOLUTION DOES NOT EXIST FOR INDICATED PRESSURE AT THIS ELEVATION.

'EM 1110-2-2502 ENGINEERING AND DESIGN, FLOODWALLS AND OTHER HYDRAULIC RETAINING WALLS - EXAMPLE
'I3 MAXD S - MAXIMUM HEAD DIFFERENTIAL WATER LEVEL S-CONDITION SHEET PILING PENETRATION

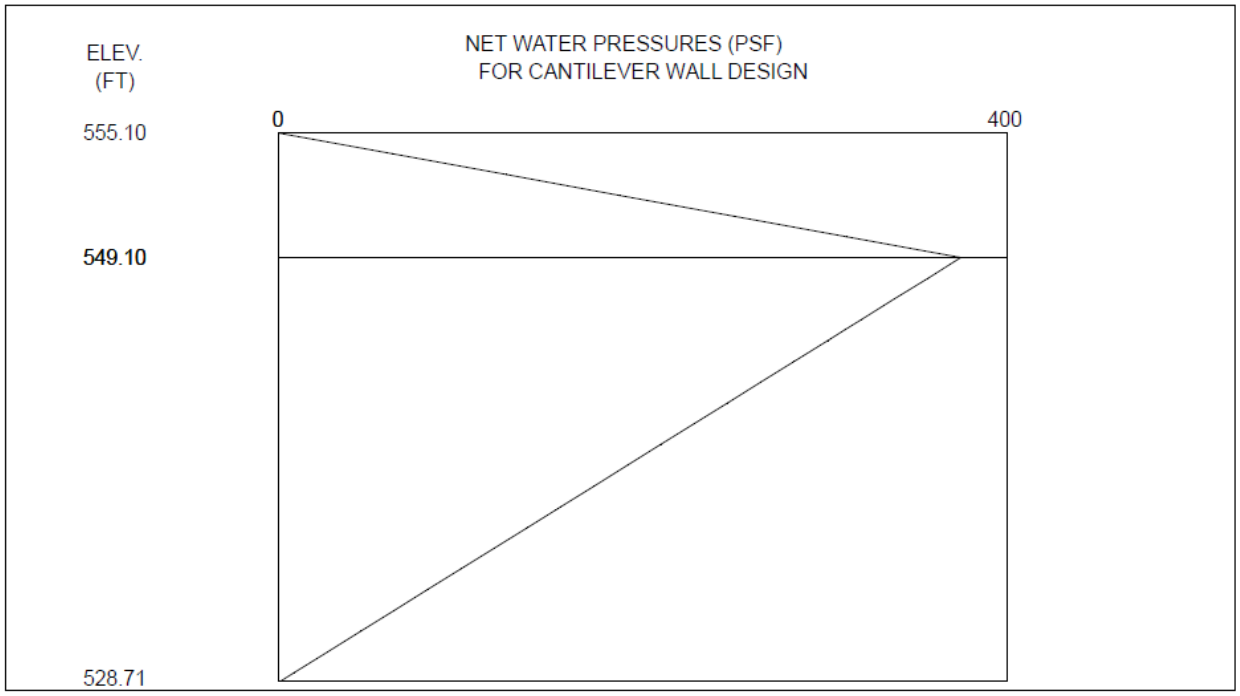

Figure F.4. Net Water Pressures (PSF) for Cantilever Wall

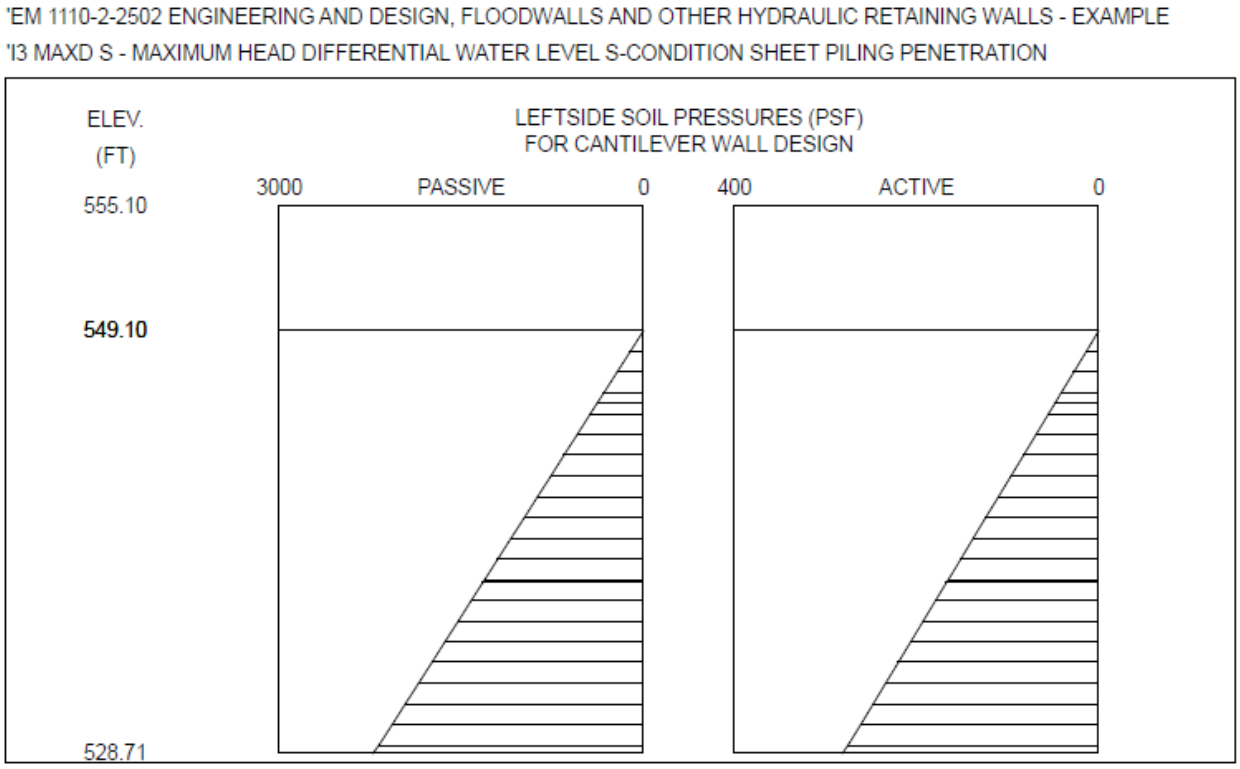

Figure F.5. Leftside Soil Pressures (PSF) for Cantilever Wall Design

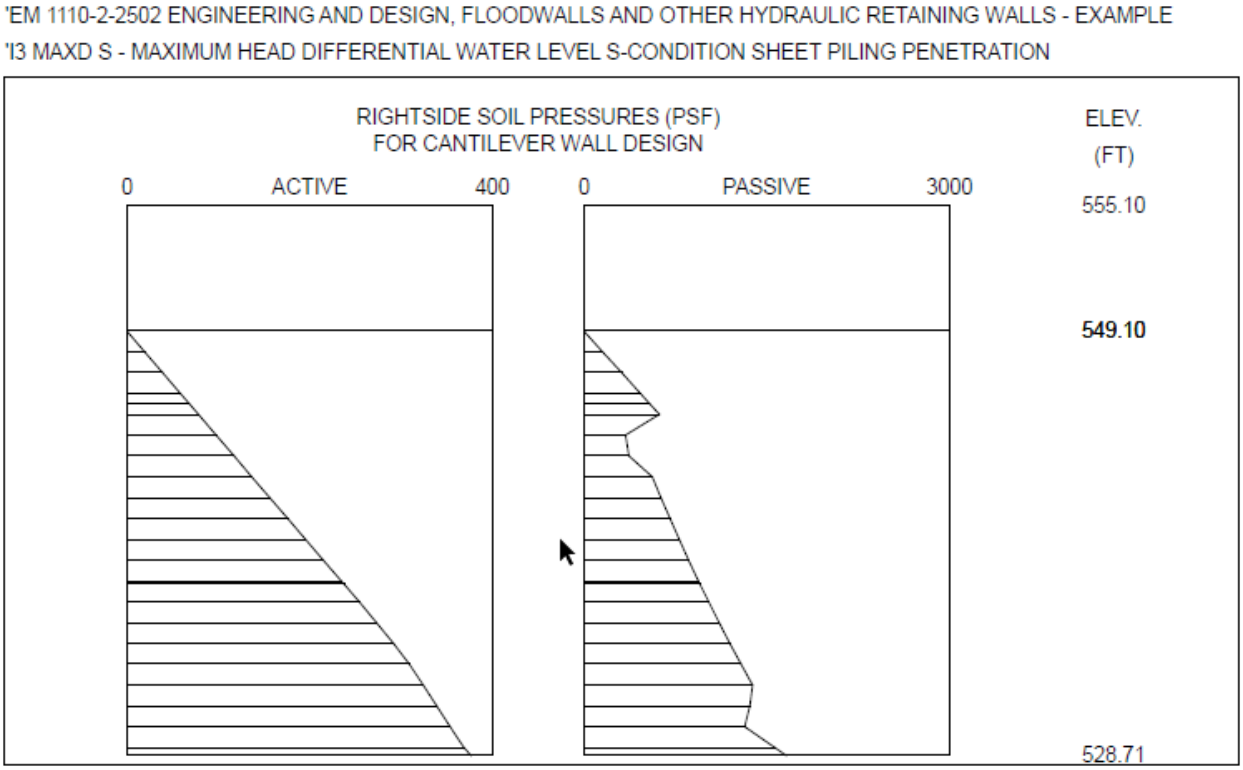

Figure F.6. Rightside Soil Pressures (PSF) for Cantilever Wall

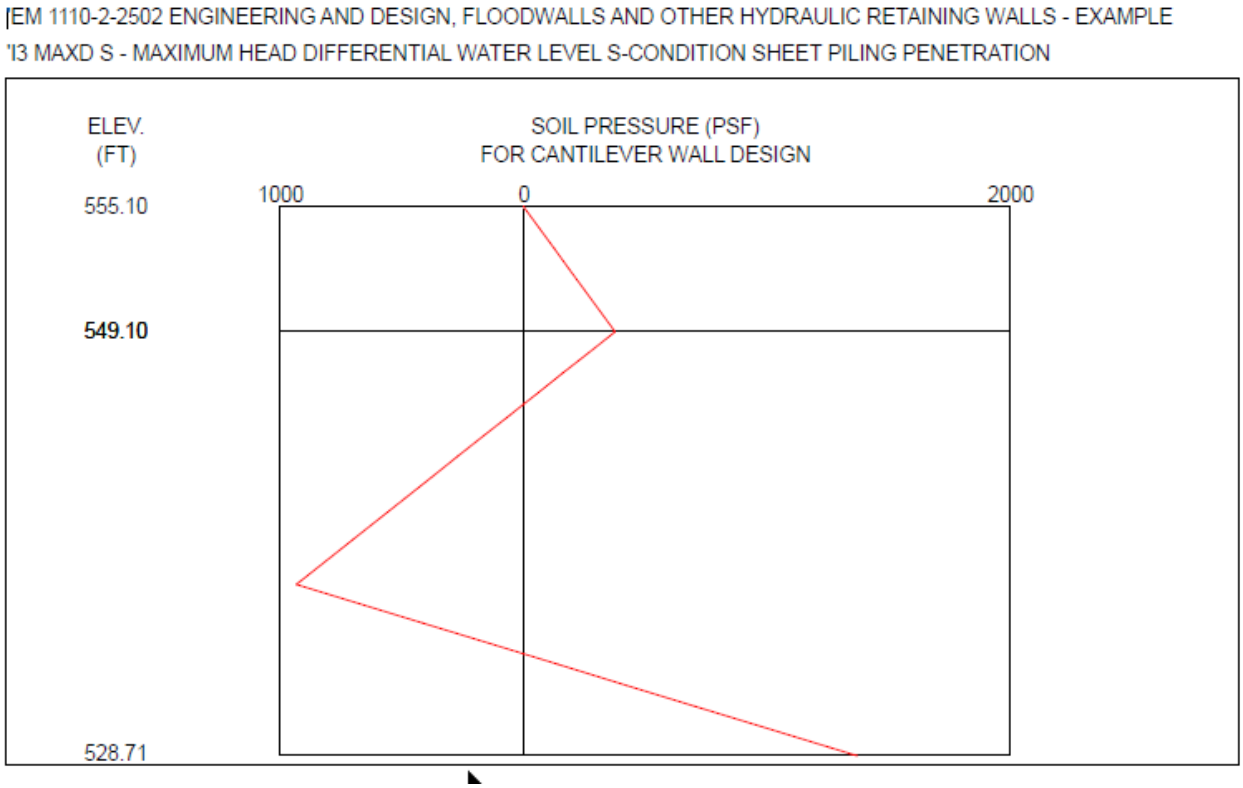

Figure F.7. Soil Pressure (PSF) for Cantilever Wall

F.7. Global Stability.

F.7.1. The global stability performance mode was assessed to determine whether the soil mass around the wall will rotate or translate in the absence of structural support. The computer program SLOPE/W in GeoStudio 2016 (Version 8.16, GeoSlope International) was used to run the stability analyses for the maximum head differential (I3 MAXD) load condition. Spencer's limit equilibrium method was used to determine the stability factors of safety. Both undrained (Q) and drained (S) analyses were run for the load condition. The undrained (Q) analyses were further subdivided to examine wall conditions where a gap had formed between the waterside wall and soil and where no gap had formed.

F.7.2. The sheet pile in this example is driven to 20 ft. depth, which is the depth needed to satisfy rotational stability (see section F.6.2). Therefore, the analyses evaluated failure surfaces passing below the sheet pile depth or deeper. The analyses did not consider failure surfaces passing through the sheet pile according to section 9.4. The analyses consider failure directions toward the landside for the two load conditions. Failure toward the river during lower water levels should be considered for general geotechnical design, but these are not considered in this example.

F.7.3. According to section 9.4.5, the formation of a gap was modeled in the undrained global stability analyses by removing soil down to the top of the free-draining soil layer at elevation 523.1 ft. and replacing the soil with water. Formation of a gap leads to the removal of soil lateral loads from the waterside, but soil lateral load is replaced by water pressure. For each of the load cases, incorporation of the gap led to enough waterside soil removal that the soil mass slides toward the river, and there were no failure surfaces in the direction of the landside. Failures toward the river during high water are not realistic and are not considered in the analysis.

F.7.4. Table F.3 below summarizes the results of the global stability analyses. Figure F.8 shows the results for the I3 MAXD load case with drained (S) strength.

Table F.3
Results of Global Stability Analyses Using SLOPE/W

Load Case	Load Description	Load Category	Water Elevation (ft)		Global Stability FS			
			Waterside	Landside	FS_{req}	Q Strength		S Strength
						No Gap	Gap	No Gap
I3	Maximum Head Differential	Unusual	555.1	549.1	1.5	8.1	*	7.2

*No solution for slip surface toward the landside. Incorporation of the gap forces soil mass to move toward the river.

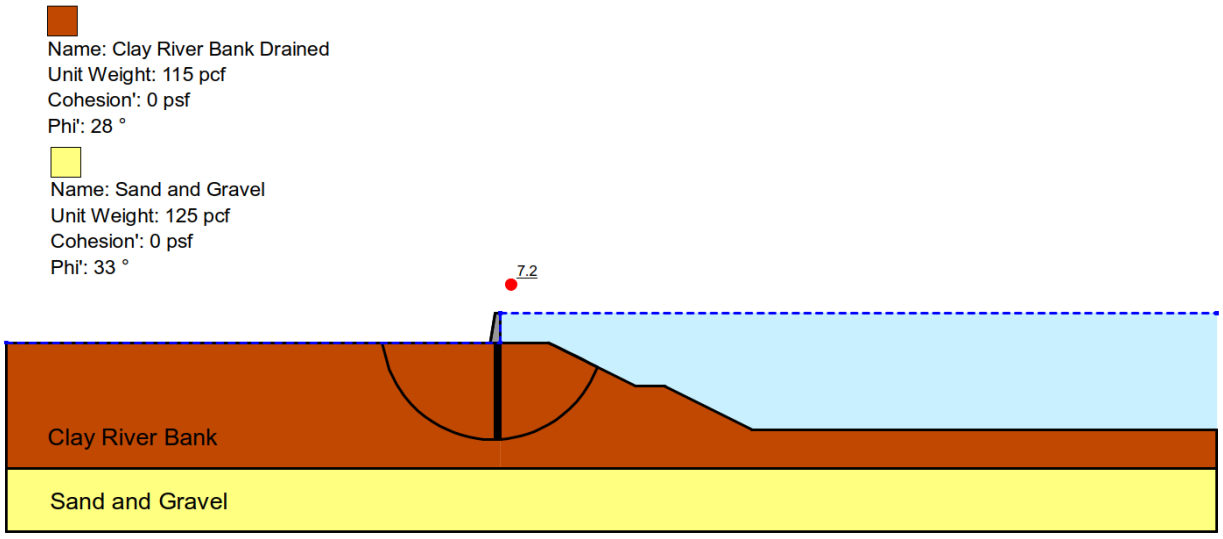

Figure F.8. Global Stability Results – I3 MAXD Drained

F.8. Internal Erosion.

F.8.1. Because the subsurface soil strata in this example are not complex, simplified equations were used to evaluate the factor of safety against internal erosion. According to sections 9.5 and 7.7, the internal erosion performance mode for the sheet pile wall was analyzed by checking the factor of safety based on the vertical gradient:

$$FS_{vg} = \frac{i_{cr}}{i_e} = \frac{\gamma' \times \Delta L}{\gamma_w \times \Delta H}$$

F.8.2. The factor of safety was checked at the sheet pile tip and the top of the sand and gravel layer based on the following assumptions:

F.8.2.1. The clay layer from elevation 523.1 to 549.1 ft. contains stratified lenses of silts and sands throughout its depth. These lenses will transmit full uplift beneath the landside at the sheet pile tip elevation. Therefore, the FS_{vg} was calculated assuming full uplift at the sheet pile tip.

F.8.2.2. The underlying sand and gravel layer is saturated and charged by either the river or by gap formation behind the sheet pile. Therefore, the FS_{vg} also was calculated for full uplift at the bottom of the clay blanket.

F.8.3. The following example calculation is for the design water level (I3 MAXD) load case.

F.8.3.1. Design Water Level – Sheet Pile Tip:

$$FS_{vg} = \frac{(115 - 62.4)pcf \times (549.1 - 528.7)ft}{(62.4)pcf \times (555.1 - 549.1)ft} = \frac{1{,}073.0psf}{374.4psf} = 2.9$$

F.8.3.2. Design Water Level – Bottom of Blanket:

$$FS_{vg} = \frac{(115-62.4)pcf \times (549.1-523.1)ft}{(62.4)pcf \times (555.1-549.1)ft} = \frac{1{,}367.6psf}{374.4psf} = 3.7$$

F.8.3.3. Table F.4 summarizes the factors of safety for vertical gradient for the I3 MAXD load case.

Table F.4
Factor of Safety for Vertical Gradient

Load Case	Load Description	Waterside Water Elevation (ft)	Landside Water Elevation (ft)	FS_{vg}		
				Required	Sheet Pile Tip	Bottom of Clay Blanket
I3	Maximum Head Differential	555.1	549.1	2.0	2.9	3.7
Sheet Pile Tip Elevation = 528.7 ft. Bottom of Clay Layer Elevation = 523.1 ft. Saturated Unit Weight of Clay Layer = 115 pcf						

F.9. Settlement. There is sufficient friction between the clay layer and the sheet pile wall to prevent sheet pile wall settlement. The floodwall design does not include any substantial grade changes so ground settlement adjacent to the sheet pile wall is not a concern.

F.10. Liquefaction and Cyclic Softening. Per section F.4.5, the earthquake ground motions are relatively low and will not induce liquefaction of the sand and gravel strata or cyclic softening of the clay strata.

F.11. Strength of Structural Elements.

F.11.1. Design Forces and Moments.

F.11.1.1. The USACE CASE program CWALSHT was used to determine the forces and moments necessary for the design of the I-wall structural elements. Active and passive factors of safety were set to 1.0 to avoid compounding factors of safety per section 9.7.1. The applicable water levels are shown in Table F.5.

Table F.5
Load Cases for Strength Design

Load Case	Load Description	Waterside Water Elevation (ft)	Landside Water Elevation (ft)
I3	Maximum Head Differential (MAXD)	555.1	549.1

F.11.1.2. The CWALSHT input and output are presented below for the load case that produced the maximum bending moment, I3 MAXD with drained (S) strengths. The moment diagram is shown in Figure F.9. The shear diagram is shown in Figure F.10.

CWALSHT Output:

```
PROGRAM CWALSHT-DESIGN/ANALYSIS OF ANCHORED OR CANTILEVER SHEET PILE WALLS
                          BY CLASSICAL METHODS
  DATE: 12-FEBRUARY-2020                                    TIME: 18:33:55

                             ****************
                             *  INPUT DATA  *
                             ****************

       I.--HEADING
      'EM 1110-2-2502 ENGINEERING AND DESIGN, FLOODWALLS AND OTHER HYDRAULIC RETAINING WALLS -
EXAMPLE
      'I3 MAXD - MAXIMUM HEAD DIFFERENTIAL WATER LEVEL S-CONDITION SHEET PILING PENETRATION

      II.--CONTROL
         CANTILEVER WALL DESIGN
         FACTOR OF SAFETY FOR ACTIVE PRESSURES  = 1.00
         FACTOR OF SAFETY FOR PASSIVE PRESSURES = 1.00

     III.--WALL DATA
         ELEVATION AT TOP OF WALL    = 555.10 FT

      IV.--SURFACE POINT DATA

           IV.A.--RIGHTSIDE
              DIST. FROM     ELEVATION
              WALL (FT)        (FT)
                  10.00        549.10
                  28.00        540.10
                  34.00        540.10
                  52.00        531.10

           IV.B.--LEFTSIDE
              DIST. FROM     ELEVATION
              WALL (FT)        (FT)
                  50.00        549.10

V.--SOIL LAYER DATA

          V.A.--RIGHTSIDE
              LEVEL 2 FACTOR OF SAFETY FOR ACTIVE PRESSURE  = DEFAULT
              LEVEL 2 FACTOR OF SAFETY FOR PASSIVE PRESSURE = DEFAULT

                ANGLE OF         ANGLE OF                          <-SAFETY->
   SAT.   MOIST  INTERNAL  COH-     WALL    ADH-    <--BOTTOM-->  <-FACTOR->
  WGHT.   WGHT.  FRICTION  ESION  FRICTION  ESION   ELEV.  SLOPE  ACT. PASS.
  (PCF)   (PCF)    (DEG)   (PSF)    (DEG)   (PSF)   (FT)  (FT/FT)
 115.00  110.00    28.00    0.00    14.00    0.00  523.10   0.00   DEF  DEF
 125.00  120.00    33.00    0.00    22.00    0.00                  DEF  DEF

          V.B.--LEFTSIDE
              LEVEL 2 FACTOR OF SAFETY FOR ACTIVE PRESSURE  = DEFAULT
              LEVEL 2 FACTOR OF SAFETY FOR PASSIVE PRESSURE = DEFAULT

                ANGLE OF         ANGLE OF                          <-SAFETY->
   SAT.   MOIST  INTERNAL  COH-     WALL    ADH-    <--BOTTOM-->  <-FACTOR->
  WGHT.   WGHT.  FRICTION  ESION  FRICTION  ESION   ELEV.  SLOPE  ACT. PASS.
  (PCF)   (PCF)    (DEG)   (PSF)    (DEG)   (PSF)   (FT)  (FT/FT)
 115.00  110.00    28.00    0.00    14.00    0.00  523.10   0.00   DEF  DEF
 125.00  120.00    33.00    0.00    22.00    0.00                  DEF  DEF

      VI.--WATER DATA
         UNIT WEIGHT         = 62.40 (PCF)
```

```
          RIGHTSIDE ELEVATION = 555.10 (FT)
          LEFTSIDE ELEVATION  = 549.10 (FT)
          SEEPAGE ELEVATION   = 549.10 (FT)
          SEEPAGE GRADIENT    = AUTOMATIC

      VII.--VERTICAL SURCHARGE LOADS
          NONE

     VIII.--HORIZONTAL LOADS

          VIII.A.--HORIZONTAL LINE LOADS
               ELEVATION     LINE LOAD
                 (FT)          (PLF)
                555.10        500.00

          VIII.B.--HORIZONTAL DISTRIBUTED LOADS
               NONE


PROGRAM CWALSHT-DESIGN/ANALYSIS OF ANCHORED OR CANTILEVER SHEET PILE WALLS
                         BY CLASSICAL METHODS
  DATE: 12-FEBRUARY-2020                                    TIME: 18:33:57

                         *************************
                         *   SOIL PRESSURES FOR  *
                         * CANTILEVER WALL DESIGN *
                         *************************

      I.--HEADING
       'EM 1110-2-2502 ENGINEERING AND DESIGN, FLOODWALLS AND OTHER HYDRAULIC RETAINING WALLS -
EXAMPLE
       'I3 MAXD - MAXIMUM HEAD DIFFERENTIAL WATER LEVEL S-CONDITION SHEET PILING PENETRATION

     II.--SOIL PRESSURES

          RIGHTSIDE SOIL PRESSURES DETERMINED BY FIXED SURFACE WEDGE METHOD.

          LEFTSIDE SOIL PRESSURES DETERMINED BY COULOMB COEFFICIENTS
          AND THEORY OF ELASTICITY EQUATIONS FOR SURCHARGE LOADS.

          SOIL PRESSURES ARE REPORTED FOR A SEEPAGE GRADIENT = 0.0001
          AND MAY CHANGE WITH AUTOMATIC ADJUSTMENT OF THE GRADIENT.

                                    <------NET------>
           NET     <---LEFTSIDE--->     (SOIL + WATER)     <--RIGHTSIDE--->
  ELEV.   WATER   PASSIVE   ACTIVE    ACTIVE   PASSIVE    ACTIVE   PASSIVE
  (FT)    (PSF)     (PSF)    (PSF)     (PSF)     (PSF)     (PSF)     (PSF)
  555.1     0.0       0.0      0.0       0.0       0.0       0.0       0.0
  554.1    62.4       0.0      0.0      62.4      62.4       0.0       0.0
  553.1   124.8       0.0      0.0     124.8     124.8       0.0       0.0
  552.1   187.2       0.0      0.0     187.2     187.2       0.0       0.0
  551.1   249.6       0.0      0.0     249.6     249.6       0.0       0.0
  550.1   312.0       0.0      0.0     312.0     312.0       0.0       0.0
  549.1   374.4       0.0      0.0     374.4     374.4       0.0       0.0
  548.1   374.4     220.7     16.7     170.2     606.8      16.5     249.1
  547.3   374.4     404.7     30.5       0.0     800.5      30.3     456.6
  547.1   374.4     441.4     33.3     -34.0     839.2      33.0     498.1
  546.1   374.4     662.2     50.0    -238.2    1071.6      49.6     747.2
  545.1   374.4     882.9     66.6    -442.5    1304.4      66.1     996.7
  544.1   374.3    1103.6     83.3    -646.7    1536.4      82.6    1245.4
  543.1   374.3    1324.3     99.9    -850.9    1740.1      99.1    1465.7
  542.1   374.3    1545.0    116.6   -1055.1    1888.9     115.6    1631.2
  541.1   374.3    1765.7    133.2   -1259.3    2008.7     132.1    1767.6
  540.1   374.3    1986.5    149.9   -1463.5    2127.5     148.7    1903.1
  539.1   374.3    2207.2    166.6   -1667.7    2246.8     165.2    2039.1
```

```
  538.1   374.3    2427.9    183.2   -1871.9    2366.1     181.7    2175.0
  537.1   374.3    2648.6    199.9   -2076.2    2485.3     198.2    2310.9
  536.1   374.2    2869.3    216.5   -2280.4    2604.6     214.7    2446.9
  535.1   374.2    3090.1    233.2   -2484.6    2723.9     231.3    2582.8
  534.1   374.2    3310.8    249.8   -2688.7    2843.1     247.8    2718.8
  533.1   374.2    3531.5    266.5   -2893.2    2962.4     264.1    2854.7
  532.1   374.2    3752.2    283.1   -3099.0    3081.7     279.0    2990.6
  531.1   374.2    3972.9    299.8   -3306.5    3200.9     292.2    3126.6
  530.1   374.2    4193.6    316.5   -3514.6    3320.2     304.8    3262.5
  529.1   374.2    4414.4    333.1   -3722.7    3439.5     317.5    3398.4
  528.1   374.1    4635.1    349.8   -3930.7    3558.7     330.3    3534.4
  527.1   374.1    4855.8    366.4   -4138.7    3678.0     343.0    3670.3
  526.1   374.1    5076.5    383.1   -4346.8    3797.3     355.7    3806.3
  525.1   374.1    5297.2    399.7   -4562.2    3550.3     361.0    3575.9
  524.1   374.1    5518.0    416.4   -4714.2    6529.1     429.7    6571.4
  523.1+  374.1    5738.7    433.0   -6378.7   13830.2     599.4   13840.3
  523.1-  374.1    8965.6    335.3   -6378.7   13830.2     599.4   13840.3
  522.1   374.1    9376.0    350.6   -8277.0   18383.5     725.0   18360.1
  521.1   374.1    9786.4    366.0   -8659.6   19347.2     752.8   19339.2
  520.1   374.0   10196.8    381.3   -9062.4   20205.7     760.4   20213.0
  519.1   374.0   10607.2    396.7   -9461.9   21030.3     771.3   21053.0
  518.1   374.0   11017.6    412.0   -9861.3   21742.3     782.3   21780.3



  PROGRAM CWALSHT-DESIGN/ANALYSIS OF ANCHORED OR CANTILEVER SHEET PILE WALLS
                           BY CLASSICAL METHODS
  DATE: 12-FEBRUARY-2020                                    TIME: 18:33:58

                         ****************************
                         *  SUMMARY OF RESULTS FOR  *
                         *  CANTILEVER WALL DESIGN  *
                         ****************************

      I.--HEADING
       'EM 1110-2-2502 ENGINEERING AND DESIGN, FLOODWALLS AND OTHER HYDRAULIC RETAINING WALLS -
EXAMPLE
       'I3 MAXD - MAXIMUM HEAD DIFFERENTIAL WATER LEVEL S-CONDITION SHEET PILING PENETRATION

     II.--SUMMARY

          RIGHTSIDE SOIL PRESSURES DETERMINED BY FIXED SURFACE WEDGE METHOD.

          LEFTSIDE SOIL PRESSURES DETERMINED BY COULOMB COEFFICIENTS
          AND THEORY OF ELASTICITY EQUATIONS FOR SURCHARGE LOADS.

     WALL BOTTOM ELEV. (FT)     :      535.20
           PENETRATION (FT)     :       13.90

     MAX. BEND. MOMENT (LB-FT)  :  1.6045E+04
           AT ELEVATION (FT)    :      542.02

     MAX. SCALED DEFL. (LB-IN^3):  3.1637E+09
           AT ELEVATION (FT)    :      555.10

     SEEPAGE GRADIENT           :     0.2161

               NOTE:  DIVIDE SCALED DEFLECTION MODULUS OF
                      ELASTICITY IN PSI TIMES PILE MOMENT
                      OF INERTIA IN IN^4 TO OBTAIN DEFLECTION
                      IN INCHES.
```

PROGRAM CWALSHT-DESIGN/ANALYSIS OF ANCHOREDOR CANTILEVER SHEET PILE WALLS
BY CLASSICAL METHODS
DATE: 12-FEBRUARY-2020 TIME: 18:33:58

****
* COMPLETE OF RESULTS FOR *
* CANTILEVER WALL DESIGN *
****

I.--HEADING
'EM 1110-2-2502 ENGINEERING AND DESIGN, FLOODWALLS AND OTHER HYDRAULIC RETAINING WALLS - EXAMPLE
'I3 MAXD - MAXIMUM HEAD DIFFERENTIAL WATER LEVEL S-CONDITION SHEET PILING PENETRATION

II.--RESULTS

ELEVATION (FT)	BENDING MOMENT (LB-FT)	SHEAR (LB)	SCALED DEFLECTION (LB-IN^3)	NET PRESSURE (PSF)
555.10	0.0000E+00	500.	3.1637E+09	0.00
554.10	5.1040E+02	531.	2.8935E+09	62.40
553.10	1.0832E+03	625.	2.6242E+09	124.80
552.10	1.7808E+03	781.	2.3569E+09	187.20
551.10	2.6656E+03	999.	2.0926E+09	249.60
550.10	3.8000E+03	1280.	1.8330E+09	312.00
549.10	5.2464E+03	1623.	1.5800E+09	374.40
548.10	7.0284E+03	1912.	1.3361E+09	204.03
547.10	9.0144E+03	2031.	1.1043E+09	33.66
546.90	9.4162E+03	2035.	1.0603E+09	0.00
546.10	1.1034E+04	1980.	8.8819E+08	-136.71
545.10	1.2917E+04	1758.	6.9110E+08	-307.08
544.10	1.4493E+04	1366.	5.1628E+08	-477.44
543.10	1.5592E+04	803.	3.6644E+08	-647.81
542.10	1.6042E+04	70.	2.4344E+08	-818.18
541.10	1.5675E+04	-833.	1.4805E+08	-988.55
540.10	1.4319E+04	-1907.	7.9606E+07	-1158.92
539.10	1.1804E+04	-3151.	3.5734E+07	-1329.29
539.02	1.1552E+04	-3256.	3.3211E+07	-1342.69
538.10	8.1314E+03	-4005.	1.2079E+07	-283.13
537.10	4.1762E+03	-3713.	2.4352E+06	866.90
536.10	1.0879E+03	-2272.	1.3248E+05	2016.94
535.22	4.9737E-01	-49.	3.7720E-02	3029.85
535.20	0.0000E+00	0.	0.0000E+00	3048.39

NOTE: DIVIDE SCALED DEFLECTION MODULUS OF
ELASTICITY IN PSI TIMES PILE MOMENT
OF INERTIA IN IN^4 TO OBTAIN DEFLECTION
IN INCHES.

III.--WATER AND SOIL PRESSURES

		<----------SOIL PRESSURES---------->			
	WATER	<----LEFTSIDE----->		<---RIGHTSIDE---->	
ELEVATION (FT)	PRESSURE (PSF)	PASSIVE (PSF)	ACTIVE (PSF)	ACTIVE (PSF)	PASSIVE (PSF)
555.10	0.	0.	0.	0.	0.
554.10	62.	0.	0.	0.	0.
553.10	125.	0.	0.	0.	0.
552.10	187.	0.	0.	0.	0.
551.10	250.	0.	0.	0.	0.
550.10	312.	0.	0.	0.	0.
549.10	374.	0.	0.	0.	0.
548.10	347.	164.	12.	21.	313.
547.10	320.	328.	25.	42.	626.
546.90	315.	361.	27.	46.	688.

546.10	293.	492.	37.	62.	939.
545.10	267.	657.	50.	83.	1252.
544.10	240.	821.	62.	104.	1564.
543.10	213.	985.	74.	125.	1841.
542.10	186.	1149.	87.	145.	2049.
541.10	159.	1313.	99.	166.	2221.
540.10	132.	1477.	111.	187.	2391.
539.10	105.	1641.	124.	208.	2562.
539.02	103.	1654.	125.	209.	2575.
538.10	78.	1806.	136.	228.	2732.
537.10	51.	1970.	149.	249.	2903.
536.10	24.	2134.	161.	270.	3074.
535.22	0.	2278.	172.	288.	3218.
535.20	0.	2305.	174.	290.	3234.
534.10	0.	2526.	191.	307.	3344.

'EM 1110-2-2502 ENGINEERING AND DESIGN, FLOODWALLS AND OTHER HYDRAULIC RETAINING WALLS - EXAMPLE

'I3 MAXD - MAXIMUM HEAD DIFFERENTIAL WATER LEVEL S-CONDITION SHEET PILING PENETRATION

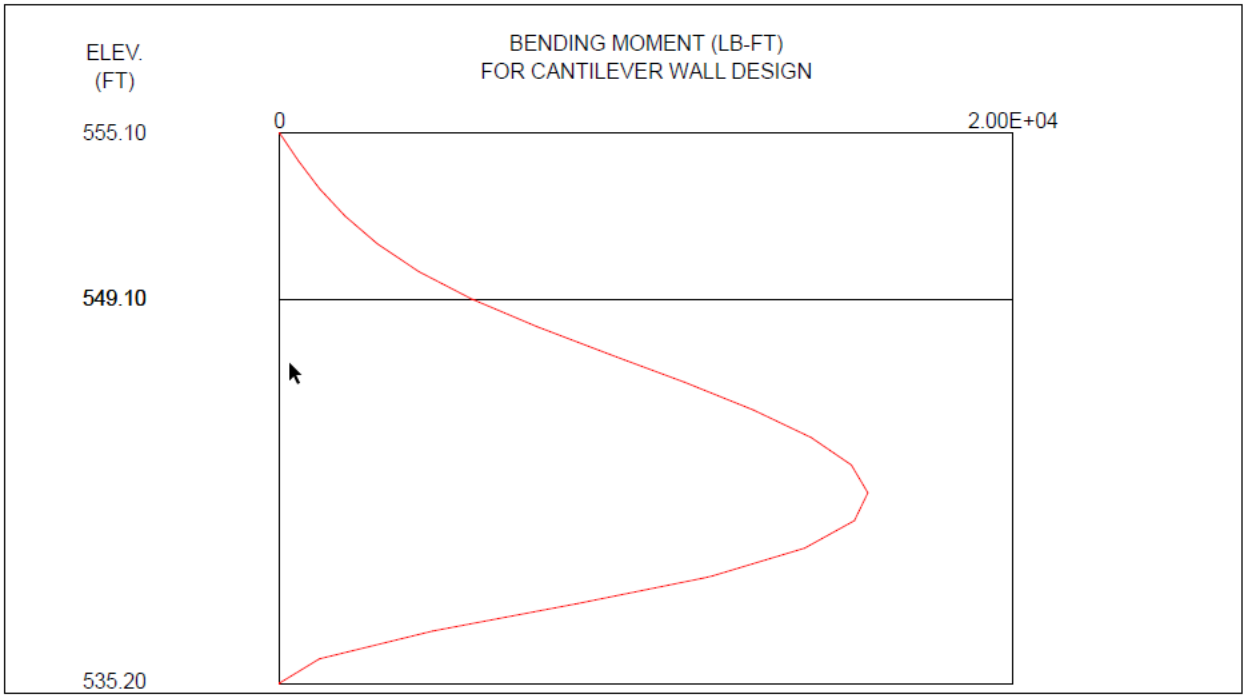

Figure F.9. Bending Moment (LB-FT) for Cantilever Wall Design

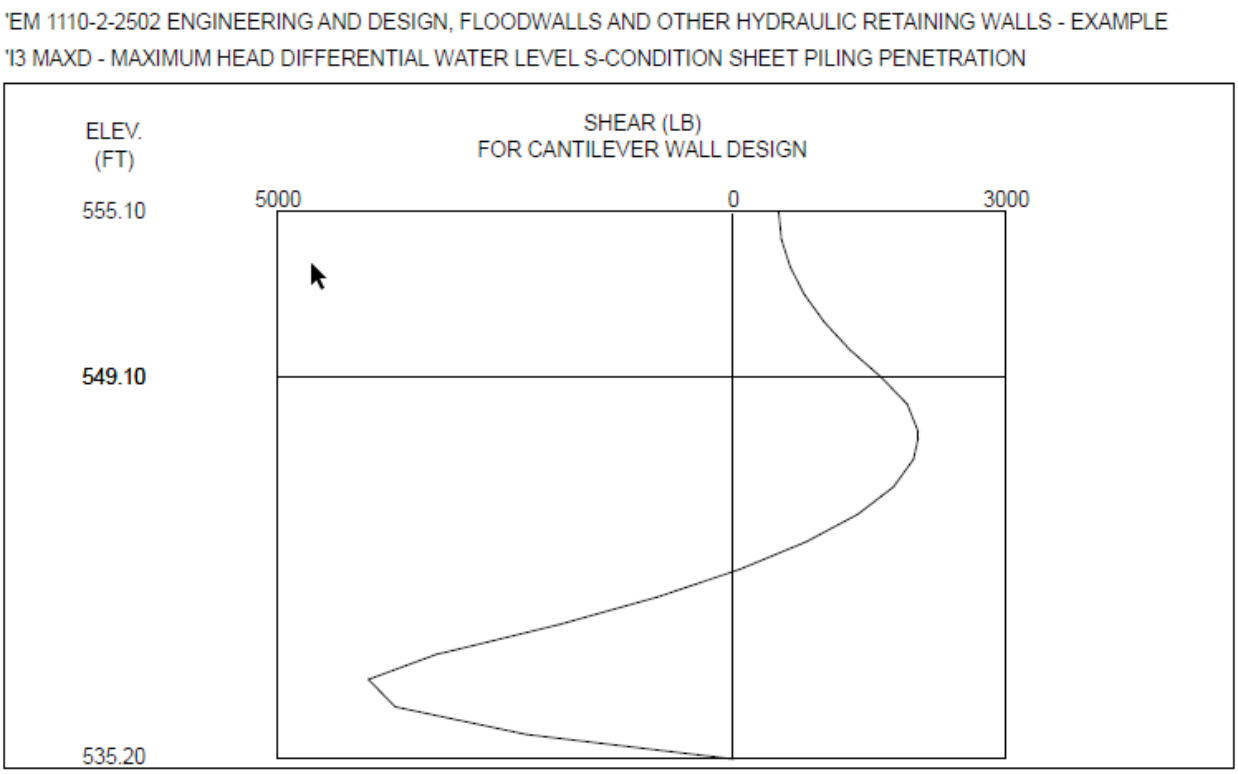

Figure F.10. Shear (LB) for Cantilever Wall Design

F.11.2. Steel Sheet Pile Design.

F.11.2.1. The sheet pile design is performed according to paragraph 9.7.4.1 using Load and Resistance Factor Design (LRFD) from ANSI/AISC 360-16 (AISC). The load case I3 MAXD S is an unusual load case and controls the design of the sheet piling. A single load factor of 1.4 is used for the unusual case. The maximum moment and shear from the CWALSHT output are:

Maximum Moment = 16.0 kip-ft/ft = 192.0 k-in/ft

Maximum Shear = 4.0 kip/ft

F.11.2.2. CWALSHT was used to determine the unfactored moments and shears for the I3 MAXD loading condition, which controls the design. The factored moment and shear can be calculated based on maximum moment and shear given above as follows:

M_u = 1.4 (16.0 kip-ft/ft) = 22.4 kip-ft/ft = 268.8 kip-in/ft

V_u = 1.4 (4.00 kip/ft) = 5.6 kip/ft

F.11.2.3. Based on a resistance factor (ϕ) of 0.9 as provided in AISC, the required section modulus is determined by:

$\phi M_n \geq M_u$,

$M_n = F_{cr} S_{min}$ (from AISC Equation F12.1)

Where:

F_{cr} – For driven hot rolled sheet pile, the members are restrained against lateral torsional buckling and the pile has sufficient thickness against local buckling; therefore, $F_{cr} = F_y$.

$S_{min} = S_x$

Therefore:

$M_n = F_y S_x$ where F_y is the yield strength and S_x is the section modulus of the sheet pile.

$\phi F_y S_x \geq M_u$

Where:

$(0.9)(50 \text{ ksi}) S_x \geq 268.8$ kip-in/ft

$S_{x\text{-required}} \geq 5.97$ in^3/ft

F.11.2.4. A hot rolled steel sheet pile section PZC13 has a section modulus of 24.2 in^3/ft, which exceeds the required 5.97 in^3/ft. The shear capacity of the chosen sheet pile section must also be checked.

$\phi V_n \geq V_u$, where $V_n = 0.6(F_y)(A_w)$ (from AISC Equation G2-1)

and $A_w = A_v = (t_w h)/w$ (from Equation 9.4)

Where:

$\phi = 0.9$ (from AISC section G1)

Therefore:

$(\phi)0.6(F_y)(A_v) \geq V_u$

$(0.9)(0.6)(50 \text{ ksi})(0.375 \text{ in.})(12.56 \text{ in.})/(2.32 \text{ ft}) = 54.8$ kip/ft

54.8 kip/ft $\geq$ 5.6 kip/ft. Therefore, shear is OK.

F.11.2.5. Coating. The sheet pile is to be coated to a depth of 10 ft. below the ground surface with coal tar epoxy paint but using a PZC 13 sheet pile provides additional cross section

to allow for loss of material due to corrosion should the coating fail at some point during the life of the structure.

F.11.3. Concrete Cap Design.

F.11.3.1. The concrete cap is designed according to paragraph 9.7.5 which refers to EM 1110-2-2104. EM 1110-2-2104 requires design according to ACI 318 but with modifications. The design load case is an unusual load case and therefore reinforced concrete design is performed with single load factor of 1.6. This is the principal load factor for maximum hydrostatic loading with a return period in the unusual category, accounting for serviceability requirements, from EM 1110-2-2104.

F.11.3.2. Design for Full Section. According to paragraph 9.8.5.5, the top of the connection (top of sheet pile) will be designed for both moment (M_a) and shear (V_a). The sheet pile is extended 36 in. into the concrete cap according to paragraph 9.8.5.2. With the bottom of the concrete set at the frost depth of 24 in. below the ground surface, the top of the sheet pile is one foot above the ground surface elevation of 550.1 ft. The forces at the top of the sheet pile from the CWALSHT analysis are:

M_a = 3.80 kip-ft/ft

V_a = 1.28 kips/ft

F.11.3.2.1. Checking bending moment, $\phi M_n \geq M_u$.

M_u = 1.6 (3.8 kip-ft/ft) = 6.08 kip-ft/ft

F.11.3.2.2. With a PZ-27 pile selected previously a minimum width of 24 in. is OK with 6 in. of cover over the pile according to paragraph 9.8.5.1.

F.11.3.3. Minimum cover from EM 1110-2-2104 is 3 in. for this application.

F.11.3.4. Minimum reinforcement for temperature and shrinkage is 0.0030 of the gross area from EM 1110-2-2104. The required area is 0.0030 (24 ft)(12 ft) = 0.86 in^2 with 0.43 in^2 each face. Try using #6 @ 12 in. with an area (A_s) of 0.44 in^2 per foot.

F.11.3.5. Calculation of M_n.

$$M_n = A_s f_y \left(d - \frac{a}{2}\right)$$

For this design, f_y = 60 ksi, f'_c = 4.0 ksi.

d = 24 in. – 3 in. (cover) – 0.5 in./(about ½ bar width) = 20.5 in.

Design for a unit width, b, of 12:

$$a = \frac{As f_y}{0.85\, f'_c\, b} = \frac{0.44\ in^2(60\ ksi)}{0.85(4.0\ ksi)(12\ in.)} = 0.65\ in.$$

$$M_n = 0.44\ in^2(60\ ksi)\left(20.5\ in. - \frac{0.65\ in.}{2}\right) = 532.6 \text{ kip-in/ft} = 44.4 \text{ kip-ft/ft}$$

From ACI 318-19, $\phi = 0.9$ for bending.

$\phi M_n = 0.9$ (44.4 kip-ft/ft) = 40.0 kip-ft/ft which is much greater than $M_u = 6.08$ kip-ft/ft

F.11.3.6. Check of reinforcing ratio (ρ) according to EM 1110-2-2104.

$$\rho_{provided} = \frac{A_s}{bd} = \frac{0.44\ in^2/ft}{12\ in.(20.5\ in.)} = 0.0018$$

F.11.3.6.1. Check minimum reinforcing requirements. From EM 1110-2-2104 the minimum requirements are:

$$\rho > \frac{3.0\sqrt{f'_c}}{F_y} = \frac{3.0\sqrt{4{,}000\ psi}}{60{,}000\ psi} = 0.0032$$

$$\rho > \frac{200}{F_y} = \frac{200}{60{,}000\ psi} = 0.0033$$

Or that ρ provided is greater than 4/3 of ρ required.

F.11.3.6.2. The required area of reinforcing steel to provide $\phi M_n = M_u = 6.08$ kip-ft/ft was found using a spreadsheet solution to be 0.066 in^2/ft.

$$\rho_{required} = \frac{A_s}{bd} = \frac{0.066\ in^2/ft}{12\ in.(20.5\ in.)} = 0.000278$$

4/3 of $\rho_{required}$ = 4/3(0.000278) = 0.00037 < $\rho_{provided}$ = 0.0018 OK

F.11.3.6.3. Check that ρ is less than $0.25\rho_b$ as required by EM 1110-2-2104.

$$\rho_b = \frac{0.85 f'_c}{f_y}\beta_1\left(\frac{87{,}000}{87{,}000 + f_y}\right)$$

F.11.3.6.4. According to ACI 318 $\beta_1 = 0.85$ for f'_c of 4,000 psi.

$$\rho_b = \frac{0.85\ (4{,}000\ psi)}{60{,}000\ psi}0.85\left(\frac{87{,}000}{87{,}000 + 60{,}000\ psi}\right) = 0.0285$$

$0.25\rho_b = 0.25(0.0285) = 0.0071 > \rho_{provided} = 0.0018$ OK

F.11.4. Design of the Driving Side Leg of the Cap Connection.

F.11.4.1. Design for bending moment in the driving side leg of the connection from the cap to the sheet piling. Check bending moment in the driving leg according to 9.8.5.6. as shown in Figure F.11. The bending moment requirements is $\phi M_n \geq M_u$, where $\phi = 0.9$.

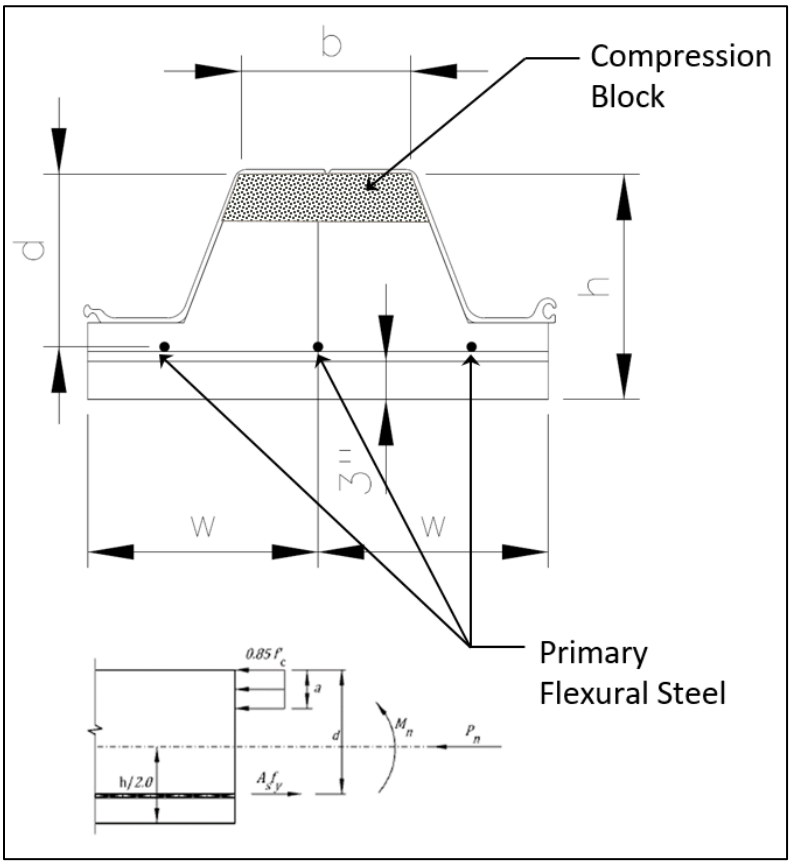

Figure F.11. Bending Moment in the Driving Leg

F.11.4.1.1. PZ-27 sheet pile has a total width, w, of 18 in. The flanges are approximately 6 in. wide per sheet.

F.11.4.1.2. Computation of bending moment is by Equation 9.7:

$M_u = LF \; x \; M_a \; x \; 2w$ = 1.6 (3.8 kip-ft/ft) (2)(18 in./12 in./ft) = 18.2 kip-ft

F.11.4.1.3. Calculation of bending moment capacity, M_n, per Equation 9.8:

$$M_n = A_s f_y \left(d - \frac{a}{2}\right)$$

With a PZ-27 pile height of 12 in., 6 in. of cover over the pile and 3 in. of cover over the reinforcing steel, the depth (d) of this section.

d = 12 in.+ 6 in. – 3 in. – ½ in. = 14.5 in.

A_s = 0.44 in^2 per foot = 0.44 in^2/ft * 2(18 in./12 in./ft) = 1.32 in^2 for the entire section (recall that the reinforcement is stated to be #6 @ 12 in. in F.11.3.4)

Design for two sheets with b of 2(6 in.) = 12 in. according to Equation 9.9.

$$a = \frac{A_s f_y}{0.85\, f'_c\, b} = \frac{1.32 in^2 (60 ksi)}{0.85(4.0 ksi)(12\ in.)} = 1.94 \text{ in.}$$

$$M_n = 1.32\ in^2(60 ksi)\left(14.5\ in. - \frac{1.94\ in.}{2}\right) = 1{,}072 \text{ kip-in} = 89.3 \text{ kip-ft}$$

ϕ = 0.9 for bending.

ϕM_n = 0.9 (89.3 kip-ft) = 80.4 kip-ft >> M_u = 18.2 kip-ft

As for the entire wall section, the capacity of the driving leg far exceeds the factored bending moment.

F.11.4.1.4. Checks for minimum and maximum reinforcement ratio are summarized without repeating calculation shown previously:

$\rho_{provided}$ = 0.0076

ρ_{min} = 0.0033 or 4/3 of $\rho_{provided}$. OK

ρ_b = 0.0285 as calculated previously

$\rho_{max} = 0.25\rho_b$ = 0.0071

$\rho_{provided}$ = 0.0076/0.0285 = 0.27ρ_b. This is greater than the upper limit of 0.25ρ_b from EM 1110-2-2104. However, $\rho_{provided}$ this is based on the reinforcement needed for temperature and shrinkage of the entire section. The ratio of the required bending moment to the capacity is 18.2 kip-ft/80.4 kip-ft = 0.23. The reinforcement ratio limit is provided in EM 1110-2-2104 to maintain service stresses to a level that will manage crack width under service stresses. The service stresses are much less than the stress that the section could attain at its maximum capacity.

F.11.4.2. Design for shear in the driving side leg according to paragraph 9.8.5.8.

$\phi V_n \geq V_u$ and ϕ = 0.75 according to ACI 318.

By Equation 9.10:

$$V_n = V_c = 2\sqrt{f'_c}\, bw\, d = 2\sqrt{4{,}000\ psi}(12\ in.)(14.5\ \text{in.}) = 22{,}010\ lb = 22.0\ kip$$

$\phi V_n = 0.75\ (22.0\ \text{kip}) = 16.5\ \text{kip}$

F.11.4.2.1. Calculate the shear on the leg, V_d, according to Equation 9.12:

$$V_d = 1.5V_a = 1.5\ (1.28\ \text{kip/ft}) = 1.92\ kip/ft$$

F.11.4.2.2. Calculate the factored shear on the section by Equation 9.11:

$$V_u = \text{LF} * V_d * 2w = 1.6 * 1.92\ kip/ft * 2(18\ in./12\ \text{in/ft}) = 9.2\ kips$$

$\phi V_n > V_u$, therefore, the section is OK.

F.11.5. Design of the Tie bar. The tie bar is designed according to paragraph 9.8.5.9. The tie bars are installed through holes cut in the sheet pile 4 in. clear of the bottom of the concrete. The tie bar strength requirement is $\varphi P_n \geq P_u$ and $\varphi = 0.9$. P_n is tie bar tension capacity calculated according to Equation 9.13:

$P_n = f_y\, A_{st}$

f_y = 60 ksi

A_{st} = area of the tie bar per foot of wall. Try #5 @ 12 in. with A_{st} = 0.31 in^2/ft

Therefore P_n = (60 ksi)(0.31 in^2/ft) = 18.6 kip/ft

$\phi P_n = 0.9(18.6\ \text{kip/ft}) = 16.7\ \text{kips/ft}$

From Equation 9.14 calculate the factored load in the tie bar (P_u):

$P_u = \text{LF}(P_t)$

LF = 1.6 as described previously

P_t = tie bar load calculated according to Equation 9.15:

$$P_t = M_a/(E - x - d_t)$$

Where:

M_a = applied moment at the top of the connection per foot of wall, 3.80 kip-ft/ft = 45.6 kip-in/ft

E = sheet pile embedment, 36 in.

x = distance from top of sheet pile to Fd (Figure 9.20) inches. For design use 4 in.

d_t = distance from bottom of concrete to center of the tie bar, 4 in. + 1/2 diameter of the tie bar round to 4.5 in.

P_t = 45.6 kip-in/ft)/(36 in. – 4 in. – 4.5 in.) = 1.25 kips/ft

P_u = 1.6 (1.25 kips/ft) = 2.0 kip/ft

P_u is much less than ϕP_n = 16.7 kips/ft so #5@12 are OK.

Appendix G
Design Example – Passive Single Anchor Pile Earth Retaining Wall

G.1. Problem Statement.

G.1.1. A village is located on an inland waterway canal system that supports commercial and recreational boat traffic. The waterway is connected to the Gulf of Mexico and experiences tidal fluctuations in the water level. The USACE annually regrades portions of the canal shoreline to mitigate erosion damage caused by periodic storms. Land usage adjacent to the canal shoreline consists primarily of residential lawns and commercial parking lots. To avoid future erosion mitigation costs, the USACE has decided to improve the canal shoreline by designing and building a coastal bulkhead retaining wall. Figure G.1 shows a photo of an illustration of a bulkhead retaining wall with timber wales (instead of steel wales as used in this example).



Figure G.1. Anchored Bulkhead Retaining Wall with Timber Wales

G.1.2. To accommodate boat traffic, the retaining wall must be 40 ft. tall from top of wall to the dredge line. Given the existing type of land usage and the required retained wall height, an anchored piled wall system is a suitable wall type.

G.1.3. The anchor pile wall in this example will be designed according to Chapter 10. English units are used in this example. See Appendix A for metric conversions.

G.2. Structure Classification. The bulkhead wall will retain the soil behind the wall and allow canal water to stand in front of the wall. There are no significant above- or below-ground structures immediately behind or in front of the wall. Failure of the wall will cause the retained soil to slide into the canal, but there will be no loss of life or extreme economic damage. Therefore, according to section 3.2.1, this wall is classified as a Normal structure.

G.3. Site Information.

G.3.1. Site Information Category. The site information category is Ordinary, and the design factors of safety will be based on this category. Based on geotechnical reports for existing structures in the village, the subsurface stratigraphy and soil parameters are spatially consistent. Tidal records are extensive so there is a high level of confidence in the water levels in the waterways.

G.3.2. Topography and Bathymetry. There is sufficient topographic and bathymetric data along the waterway due to the extensive historical boat traffic in the region.

G.3.3. Geology. Design consultants evaluated geologic maps and logs from previous geotechnical investigations for existing structures to assess the general geology of the village area and to determine the scope of work for the geotechnical investigation for the retaining wall.

G.3.4. Reach Selection and Analysis Cross Section. The data indicate that the geology, topography, and bathymetry data along the proposed retaining wall are sufficiently consistent, and the size of the project is sufficiently limited, that only one analysis cross section is necessary to design the retaining wall. Figure G.2 shows the analysis cross section for the retaining wall design.

G.3.5. Geotechnical. A geotechnical investigation was performed according to recommendations in Chapter 5. Data from the geotechnical investigation was analyzed to produce soil parameters necessary for retaining wall design. The design unit is the average of all the data. The design friction angle adheres to the 1/3 – 2/3 rule: roughly 1/3 of the friction angle data points are lower than the design friction angle and 2/3 of the data points are higher. Figure G.2 shows the anchored retaining wall soil profile with the design unit weight and strength parameters.

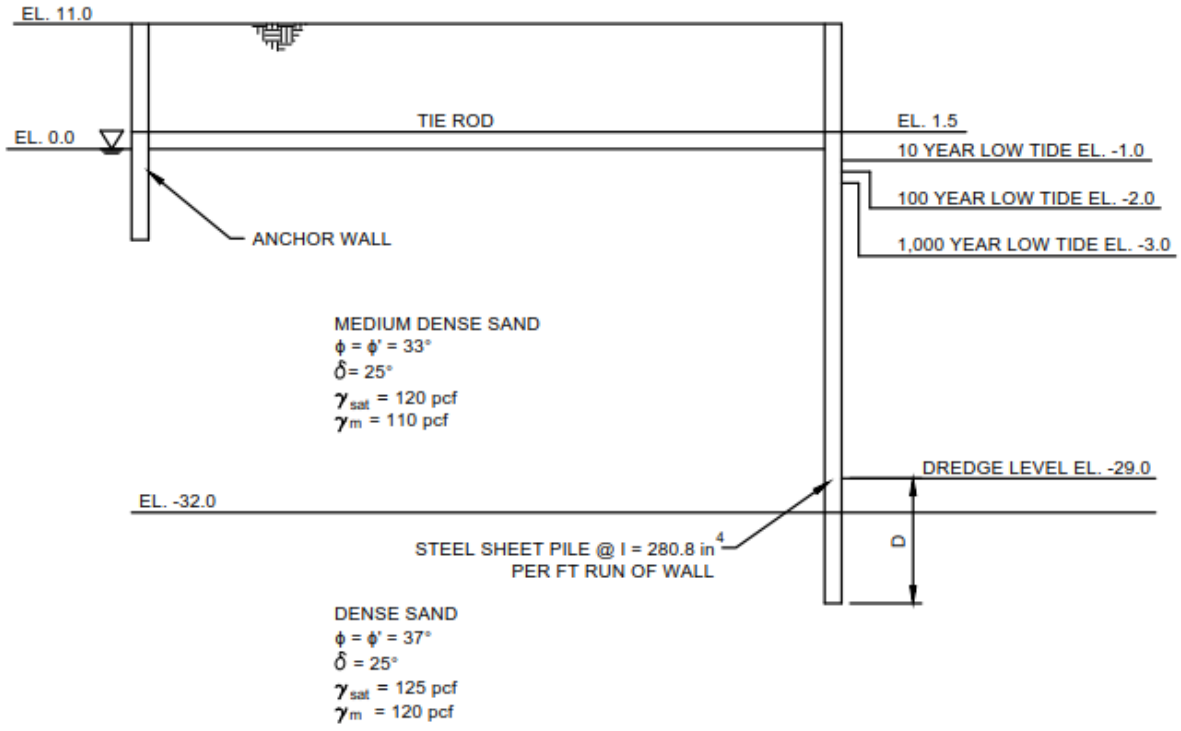

Figure G.2. Idealized Cross Section for Design

G.3.6. Environmental. A corrosion test suite was conducted on representative soil samples from the SPT drive borings. These tests included chloride and sulfate ion measurements, pH measurement, and electrical conductivity. The test results indicate that the soils and subsurface pore fluid is non-corrosive to concrete and metal.

G.4. Loads. The top of the retaining wall will be at the waterway canal shoreline elevation of 11.0 ft. Relevant loads on the wall include Gravity, Hydrostatic and Groundwater, Earth Pressure, Surcharge, and Earthquake loads.

G.4.1. Dead, D. The gravity load is the dead weight of the sheet pile wall. This load is a permanent, usual load.

G.4.2. Hydrostatic, Hs.

G.4.2.1. The hydrostatic and groundwater loads are water forces that are both above and below the ground and seepage forces. Figure G.2 shows groundwater at elevation 0.0 ft. and the canal water at the following elevations for the retaining wall design:

G.4.2.1.1. Usual Low Tide – canal water at elevation -1.0 ft. usual, temporary load with a 10-year return period.

G.4.2.1.2. Unusual Low Tide – canal water at elevation -2.0 ft. unusual, temporary load with a 100-year return period.

G.4.2.1.3. Extreme Low Tide – canal water at elevation -3.0 ft. extreme, temporary load with a 1,000-year return period.

G.4.2.2. The canal is close enough to the Gulf of Mexico that the water is brackish with a unit weight of 64 pcf.

G.4.2.3. Because the head drops from the landside to the canal side, there may be seepage forces that increase effective soil stress, and therefore active pressures, on the landside of the wall. The seepage forces will decrease effective stress, and therefore decrease stabilizing passive pressures, on the canal side of the wall. Because the difference in water level between the landside and canal side is low (1 to 3 ft. difference), and the seepage path is relatively long, the seepage effect is minor.

G.4.2.3.1. For example, for a sheet pile penetration depth of 12 ft., the average seepage gradient for a 3 ft. water level difference is approximately 0.06. This gradient increases the effective unit weight of the soil on the active side by about 6 percent, and decreases the effective unit weight on the passive side by about 6 percent.

G.4.2.3.2. Thus, in the rotational stability analysis, incorporating the effect of seepage will increase the sheet pile penetration depth, but not significantly. The additional computational effort to incorporate seepage in the rotational stability analysis (CWALSHT) is not warranted in this example.

G.4.3. Earth Pressure, EH. The earth pressures on the retaining wall are the lateral active and passive earth pressures based on the design soil parameters in Figure G.2. The earth pressures include the effect of interface friction (δ) between the soil and the wall for the rotational stability analysis (CWALSHT). The stability analyses sections below further discuss the interface friction values.

G.4.4. Surcharge Loads, ES. The design of the anchored retaining wall includes a 250 psf uniform surcharge load on the soil surface in the vicinity of the wall due to stockpiled material, machinery, occasional vehicle traffic and other influences. This is an unusual load. The driving groundwater level is at elevation 0.0 ft. and the resisting canal water level is at elevation -1.0 ft.

G.4.5. Earthquake, EQ.

G.4.5.1. The project is located in a Low Hazard Region according to the Seismic Hazard Regions Map included in ER 1110-2-1806. As described in paragraph 6.9.1, the design must consider two different earthquakes: Operating Basis Earthquake (OBE) and the Maximum Design Earthquake (MDE). This wall is classified as a normal structure. According to Table B-1 in Appendix B of ER 1110-2-1806, the hazard potential is low. The OBE will be determined based on 144 years of return period and MDE will be determined based on a

950-year return period according to ER 1110-2-1806. Using the USGS Seismic Hazard Maps (2014), the peak ground acceleration modified for the site soil conditions using Tables: 20.3-1 Site Classification and 11.8-1 Site Coefficient F_{PGA} of ASCE 7-16 is:

PGA = 0.011g for the OBE (144-year return period)

PGA = 0.040g for the MDE (950-year return period)

These are very low ground motions for the given earthquakes.

G.4.5.2. According to section 6.9.6, the seismic coefficients for preliminary seismic stability analysis using the seismic coefficient method are the following:

Seismic Coefficient (OBE) = 2/3 PGA = 0.006

Seismic Coefficient (MDE) = 2/3 PGA = 0.026

G.4.5.3. Based on the required performance levels, the anchored retaining wall should be designed to be serviceable and operable immediately following an OBE event and to not collapse under the MDE event. Because of the very low ground motions, seismic loadings will not control design decided by experienced structural design engineer and will not be evaluated further in this example.

G.4.6. Load Cases and Combinations.

G.4.6.1. There are four load cases for the project: 10-Year Low Tide, 10-Year Low Tide with Surcharge, 100-Year Low Tide, and 1,000-Year Low Tide. In all four cases, the groundwater on the landside of the retaining wall is at ground surface elevation 0.0 ft. Extreme tide or wind conditions could lead to these low water elevations. Table G.1 lists the load case combinations.

Table G.1
Load Combinations for Passive Single Anchor Pile Wall

Load Case	Load Description	Load Category	Load Combination
A1	10-Year Low Tide	Usual	EH + Hs
A2	10-Year Low Tide + Surcharge	Unusual	EH + Hs + ES
A3	100-Year Low Tide	Unusual	EH + Hs
A4	1,000-Year Low Tide	Extreme	EH + Hs

G.4.6.2. Load Case A1, 10-Year Low Tide. Canal water at elevation -1.0 ft.

G.4.6.3. Load Case A2, 10-Year Low Tide with Surcharge. This load case is the same as A1 except with a uniform surcharge load 250 psf on the landside ground adjacent to the wall. The surcharge represents various different loads such as stockpiled material, machinery loads, and occasional vehicles.

G.4.6.4. Load Case A3, 100-Year Low Tide. Canal water at elevation -2.0 ft.

G.4.6.5. Load Case A4, 1,000-Year Low Tide. Canal water is at elevation -3.0 ft.

G.5. Performance Modes. Anchored retaining wall design must address seven performance modes: rotational stability, global stability, anchor stability, internal erosion, settlement, liquefaction and cyclic softening, and strength of structural elements.

G.6. Rotational Stability.

G.6.1. The anchored wall depth or a combination of the wall depth and the anchor position govern the rotational stability of the anchored wall. Adequate wall penetration into the soil and appropriate anchor position will prevent rotational failure. The USACE CASE program CWALSHT (Version date 4/21/15) was used to evaluate rotational stability. Factors of safety were applied to the passive pressure according to paragraph 10.3.5 and Table 10.1. No factor of safety is applied to the active pressure.

G.6.2. The interface friction angle between the sandy soil and the steel sheet pile is $\delta' = 24°$ for medium sand and rough steel according to Table 6.2. Note that CWALSHT performs analysis using upper bound charts of Caquot & Kerisel (1948) (log-spiral) so no limitations are required for δ' per section 6.7.6.4. Note that many designs are performed with $\delta' = 0$. This results in a greater required sheet pile depth and higher design forces in the sheet pile and anchorage, but not excessively so.

G.6.3. For water, seepage was set to AUTOMATIC. For versions of CWALSHT run at the time of this manual the AUTOMATIC command cannot be added using the program editing interface. These commands were added by editing the input file according to the user's manual.

G.6.4. CWALSHT provides results for both free earth and fixed earth boundary assumptions. The fixed earth results are provided for information only and are not used in design.

G.6.5. Table G.2 summarizes the CWALSHT results.

Table G.2
Results of Anchor Wall Rotational Stability Analysis Using CWALSHT

Load Case	Load Category	Factor of Safety	Canal Side Water Elevation (ft)	Retained Soil Side Water Elevation (ft)	Required Penetration (ft)	Required Tip Elevation (ft)	Anchor Force (kip/ft)
A1	Usual	1.7	-1.0	0.0	12.6	-41.6	10.7
A2	Unusual	1.5	-1.0	0.0	11.8	-40.8	12.4
A3	Unusual	1.5	-2.0	0.0	11.7	-40.7	11.4
A4	Extreme	1.3	-3.0	0.0	10.7	-39.7	11.9

G.6.6. Table G.2 indicates that the minimum required sheet piling penetration is approximately 12.6 ft. based on the A1 load case. Therefore, the sheet piling will penetrate to at least elevation -41.6 ft.

G.6.7. The following are the CWALSHT inputs, outputs, and graphics from the A1 load case. Net Water pressure is shown in Figure G.3. Earth pressures are shown in Figures G.4 through G.6. Net Soil Pressure is shown in Figure G.6.

CWALSHT Input:

```
'EM 1110-2-2502 EXAMPLE - PASSIVE SINGLE ANCHOR PILE WALL - A1 - 10-YEAR LOW TIDE
CONTROL  ANCHORED  DESIGN  1.00  1.70
WALL   11    1.5
SURFACE RIGHTSIDE  1    0    11
SURFACE LEFTSIDE   1    0   -29
SOIL RIGHTSIDE  STRENGTHS   2
   120    110    33    0    24    0   -32   0
   125    120    37    0    24    0
SOIL LEFTSIDE  STRENGTHS   2
   120    110    33    0    24    0   -32   0
   125    120    37    0    24    0
WATER ELEVATIONS   64    0   -1   0 AUTOMATIC
FINISHED
```

CWALSHT Output (with intermediate pressures and fixed earth results omitted):

```
PROGRAM CWALSHT-DESIGN/ANALYSIS OF ANCHORED OR CANTILEVER SHEET PILE WALLS
                          BY CLASSICAL METHODS
  DATE: 13-FEBRUARY-2020                                        TIME: 17:58:43

                             ****************
                             *  INPUT DATA  *
                             ****************

       I.--HEADING
      'EM 1110-2-2502 EXAMPLE - PASSIVE SINGLE ANCHOR PILE WALL - A1 - 10-YEAR LOW TIDE

      II.--CONTROL
         ANCHORED WALL DESIGN
         FACTOR OF SAFETY FOR ACTIVE PRESSURES  = 1.00
         FACTOR OF SAFETY FOR PASSIVE PRESSURES = 1.70

     III.--WALL DATA
         ELEVATION AT TOP OF WALL    = 11.00 FT
         ELEVATION AT ANCHOR         = 1.50 FT

      IV.--SURFACE POINT DATA

           IV.A.--RIGHTSIDE
              DIST. FROM     ELEVATION
              WALL (FT)        (FT)
                   0.00         11.00

           IV.B.--LEFTSIDE
              DIST. FROM     ELEVATION
              WALL (FT)        (FT)
                   0.00        -29.00
```

```
V.--SOIL LAYER DATA

          V.A.--RIGHTSIDE
              LEVEL 2 FACTOR OF SAFETY FOR ACTIVE PRESSURE  = DEFAULT
              LEVEL 2 FACTOR OF SAFETY FOR PASSIVE PRESSURE = DEFAULT

                ANGLE OF         ANGLE OF                          <-SAFETY->
   SAT.   MOIST  INTERNAL  COH-     WALL    ADH-    <--BOTTOM-->  <-FACTOR->
  WGHT.   WGHT.  FRICTION  ESION  FRICTION  ESION   ELEV.  SLOPE  ACT. PASS.
  (PCF)   (PCF)    (DEG)   (PSF)    (DEG)   (PSF)  (FT)   (FT/FT)
 120.00  110.00    33.00    0.00    24.00    0.00  -32.00   0.00   DEF  DEF
 125.00  120.00    37.00    0.00    24.00    0.00                  DEF  DEF

          V.B.--LEFTSIDE
              LEVEL 2 FACTOR OF SAFETY FOR ACTIVE PRESSURE  = DEFAULT
              LEVEL 2 FACTOR OF SAFETY FOR PASSIVE PRESSURE = DEFAULT

                ANGLE OF         ANGLE OF                          <-SAFETY->
   SAT.   MOIST  INTERNAL  COH-     WALL    ADH-    <--BOTTOM-->  <-FACTOR->
  WGHT.   WGHT.  FRICTION  ESION  FRICTION  ESION   ELEV.  SLOPE  ACT. PASS.
  (PCF)   (PCF)    (DEG)   (PSF)    (DEG)   (PSF)  (FT)   (FT/FT)
 120.00  110.00    33.00    0.00    24.00    0.00  -32.00   0.00   DEF  DEF
 125.00  120.00    37.00    0.00    24.00    0.00                  DEF  DEF

      VI.--WATER DATA
         UNIT WEIGHT         = 64.00 (PCF)
         RIGHTSIDE ELEVATION = 0.00 (FT)
         LEFTSIDE ELEVATION  = -1.00 (FT)
         SEEPAGE ELEVATION   = 0.00 (FT)
         SEEPAGE GRADIENT    = AUTOMATIC

     VII.--VERTICAL SURCHARGE LOADS
         NONE

    VIII.--HORIZONTAL LOADS
         NONE




PROGRAM CWALSHT-DESIGN/ANALYSIS OF ANCHORED OR CANTILEVER SHEET PILE WALLS
                          BY CLASSICAL METHODS
  DATE: 13-FEBRUARY-2020                                  TIME: 17:58:48

                        ****************************
                        *  SUMMARY OF RESULTS FOR  *
                        *   ANCHORED WALL DESIGN   *
                        ****************************

      I.--HEADING
        'EM 1110-2-2502 EXAMPLE - PASSIVE SINGLE ANCHOR PILE WALL - A1 - 10-YEAR LOW TIDE

    II.--SUMMARY

         RIGHTSIDE SOIL PRESSURES DETERMINED BY COULOMB COEFFICIENTS
         AND THEORY OF ELASTICITY EQUATIONS FOR SURCHARGE LOADS.

         LEFTSIDE SOIL PRESSURES DETERMINED BY COULOMB COEFFICIENTS
         AND THEORY OF ELASTICITY EQUATIONS FOR SURCHARGE LOADS.

    METHOD                            :    FREE EARTH         FIXED EARTH

    WALL BOTTOM ELEVATION (FT)        :       -41.64              -49.76
          PENETRATION (FT)            :        12.64               20.76
```

```
MAXIMUM BENDING MOMENT (LB-FT)      :  -1.0546E+05         -7.8088E+04
      AT ELEVATION (FT)             :       -19.19              -16.74

MAXIMUM SCALED DEFLECTION (LB-IN^3):   3.3261E+10          2.2192E+10
      AT ELEVATION (FT)             :       -20.00              -18.00

ANCHOR FORCE (LB)                  :    1.0730E+04          9.3342E+03

SEEPAGE GRADIENT                   :       0.0184              0.0142

          NOTE:  DIVIDE SCALED DEFLECTION MODULUS OF
                 ELASTICITY IN PSI TIMES PILE MOMENT
                 OF INERTIA IN IN^4 TO OBTAIN DEFLECTION
                 IN INCHES.
```

```
PROGRAM CWALSHT-DESIGN/ANALYSIS OF ANCHOREDOR CANTILEVER SHEET PILE WALLS
                          BY CLASSICAL METHODS
  DATE: 13-FEBRUARY-2020                                    TIME: 17:58:48

                        ****************************
                        * COMPLETE OF RESULTS FOR  *
                        *   ANCHORED WALL DESIGN   *
                        *   BY FREE EARTH METHOD   *
                        ****************************

      I.--HEADING
      'EM 1110-2-2502 EXAMPLE - PASSIVE SINGLE ANCHOR PILE WALL - A1 - 10-YEAR LOW TIDE
     II.--RESULTS (ANCHOR FORCE= 10730. (LB))
```

ELEVATION (FT)	BENDING MOMENT (LB-FT)	SHEAR (LB)	SCALED DEFLECTION (LB-IN^3)	NET PRESSURE (PSF)
11.00	0.0000E+00	0.	-2.3462E+10	0.00
10.00	4.4249E+00	13.	-2.0995E+10	26.55
9.00	3.5399E+01	53.	-1.8529E+10	53.10
8.00	1.1947E+02	119.	-1.6062E+10	79.65
7.00	2.8319E+02	212.	-1.3595E+10	106.20
6.00	5.5311E+02	332.	-1.1128E+10	132.75
5.00	9.5578E+02	478.	-8.6596E+09	159.30
4.00	1.5177E+03	650.	-6.1896E+09	185.85
3.00	2.2655E+03	850.	-3.7169E+09	212.39
2.00	3.2257E+03	1075.	-1.2403E+09	238.94
1.50+	3.7938E+03	1198.	0.0000E+00	252.22
1.50-	3.7938E+03	-9532.	0.0000E+00	252.22
1.00	-9.3989E+02	-9402.	1.2415E+09	265.49
0.00	-1.0205E+04	-9123.	3.7214E+09	292.04
-1.00	-1.9169E+04	-8793.	6.1837E+09	368.66
-2.00	-2.7776E+04	-8418.	8.6129E+09	381.29
-3.00	-3.6001E+04	-8030.	1.0994E+10	393.91
-4.00	-4.3833E+04	-7630.	1.3313E+10	406.53
-5.00	-5.1257E+04	-7217.	1.5557E+10	419.15
-6.00	-5.8263E+04	-6792.	1.7712E+10	431.77
-7.00	-6.4837E+04	-6354.	1.9766E+10	444.39
-8.00	-7.0966E+04	-5903.	2.1708E+10	457.01
-9.00	-7.6639E+04	-5440.	2.3528E+10	469.64
-10.00	-8.1842E+04	-4964.	2.5215E+10	482.26
-11.00	-8.6562E+04	-4475.	2.6761E+10	494.88
-12.00	-9.0788E+04	-3974.	2.8158E+10	507.50
-13.00	-9.4506E+04	-3460.	2.9398E+10	520.12
-14.00	-9.7705E+04	-2934.	3.0474E+10	532.74
-15.00	-1.0037E+05	-2395.	3.1382E+10	545.36
-16.00	-1.0249E+05	-1843.	3.2116E+10	557.99

-17.00	-1.0405E+05	-1279.	3.2673E+10	570.61
-18.00	-1.0504E+05	-702.	3.3051E+10	583.23
-19.00	-1.0545E+05	-112.	3.3247E+10	595.85
-20.00	-1.0526E+05	490.	3.3261E+10	608.47
-21.00	-1.0447E+05	1105.	3.3094E+10	621.09
-22.00	-1.0305E+05	1732.	3.2745E+10	633.71
-23.00	-1.0100E+05	2372.	3.2219E+10	646.34
-24.00	-9.8302E+04	3025.	3.1519E+10	658.96
-25.00	-9.4946E+04	3690.	3.0648E+10	671.58
-26.00	-9.0918E+04	4368.	2.9614E+10	684.20
-27.00	-8.6206E+04	5058.	2.8423E+10	696.82
-28.00	-8.0797E+04	5761.	2.7082E+10	709.44
-29.00	-7.4679E+04	6477.	2.5603E+10	722.06
-30.00	-6.7865E+04	7125.	2.3994E+10	573.85
-31.00	-6.0478E+04	7625.	2.2268E+10	425.64
-32.00	-5.2680E+04	7931.	2.0438E+10	185.87
-32.66	-4.7444E+04	7992.	1.9185E+10	0.00
-33.00	-4.4704E+04	7975.	1.8517E+10	-97.11
-34.00	-3.6809E+04	7782.	1.6518E+10	-288.52
-35.00	-2.9203E+04	7398.	1.4456E+10	-479.94
-36.00	-2.2077E+04	6822.	1.2343E+10	-671.35
-37.00	-1.5622E+04	6055.	1.0192E+10	-862.76
-38.00	-1.0030E+04	5097.	8.0139E+09	-1054.18
-39.00	-5.4923E+03	3947.	5.8183E+09	-1245.59
-40.00	-2.2001E+03	2606.	3.6131E+09	-1437.00
-41.00	-3.4484E+02	1073.	1.4038E+09	-1628.42
-41.64	0.0000E+00	0.	0.0000E+00	-1750.00

NOTE: DIVIDE SCALED DEFLECTION MODULUS OF ELASTICITY IN PSI TIMES PILE MOMENT OF INERTIA IN IN^4 TO OBTAIN DEFLECTION IN INCHES.

III.--WATER AND SOIL PRESSURES

		<----------SOIL PRESSURES---------->			
	WATER	<----LEFTSIDE----->		<---RIGHTSIDE---->	
ELEVATION (FT)	PRESSURE (PSF)	PASSIVE (PSF)	ACTIVE (PSF)	ACTIVE (PSF)	PASSIVE (PSF)
11.00	0.	0.	0.	0.	0.
10.00	0.	0.	0.	27.	320.
9.00	0.	0.	0.	53.	641.
8.00	0.	0.	0.	80.	961.
7.00	0.	0.	0.	106.	1281.
6.00	0.	0.	0.	133.	1602.
5.00	0.	0.	0.	159.	1922.
4.00	0.	0.	0.	186.	2242.
3.00	0.	0.	0.	212.	2563.
2.00	0.	0.	0.	239.	2883.
1.50	0.	0.	0.	252.	3043.
1.00	0.	0.	0.	265.	3204.
0.00	0.	0.	0.	292.	3524.
-1.00	63.	0.	0.	306.	3690.
-2.00	62.	0.	0.	320.	3857.
-3.00	61.	0.	0.	333.	4023.
-4.00	60.	0.	0.	347.	4190.
-5.00	59.	0.	0.	361.	4356.
-6.00	59.	0.	0.	375.	4523.
-7.00	58.	0.	0.	389.	4690.
-8.00	57.	0.	0.	402.	4856.
-9.00	56.	0.	0.	416.	5023.
-10.00	55.	0.	0.	430.	5189.
-11.00	54.	0.	0.	444.	5356.
-12.00	53.	0.	0.	458.	5522.
-13.00	52.	0.	0.	471.	5689.
-14.00	51.	0.	0.	485.	5855.
-15.00	50.	0.	0.	499.	6022.

-16.00	49.	0.	0.	513.	6188.
-17.00	49.	0.	0.	527.	6355.
-18.00	48.	0.	0.	540.	6521.
-19.00	47.	0.	0.	554.	6688.
-20.00	46.	0.	0.	568.	6854.
-21.00	45.	0.	0.	582.	7021.
-22.00	44.	0.	0.	596.	7187.
-23.00	43.	0.	0.	609.	7354.
-24.00	42.	0.	0.	623.	7520.
-25.00	41.	0.	0.	637.	7687.
-26.00	40.	0.	0.	651.	7853.
-27.00	39.	0.	0.	665.	8020.
-28.00	39.	0.	0.	678.	8187.
-29.00	38.	0.	0.	692.	8353.
-30.00	36.	160.	13.	706.	8520.
-31.00	34.	319.	26.	720.	8686.
-32.00+	32.	479.	40.	734.	8853.
-32.00-	32.	555.	34.	627.	10258.
-32.66	31.	688.	42.	635.	10396.
-33.00	30.	757.	46.	639.	10468.
-34.00	29.	959.	59.	652.	10678.
-35.00	27.	1161.	71.	665.	10887.
-36.00	25.	1362.	83.	678.	11097.
-37.00	23.	1564.	96.	691.	11307.
-38.00	21.	1766.	108.	703.	11517.
-39.00	19.	1968.	120.	716.	11727.
-40.00	18.	2170.	133.	729.	11937.
-41.00	16.	2372.	145.	742.	12146.
-41.64	14.	2500.	153.	750.	12280.

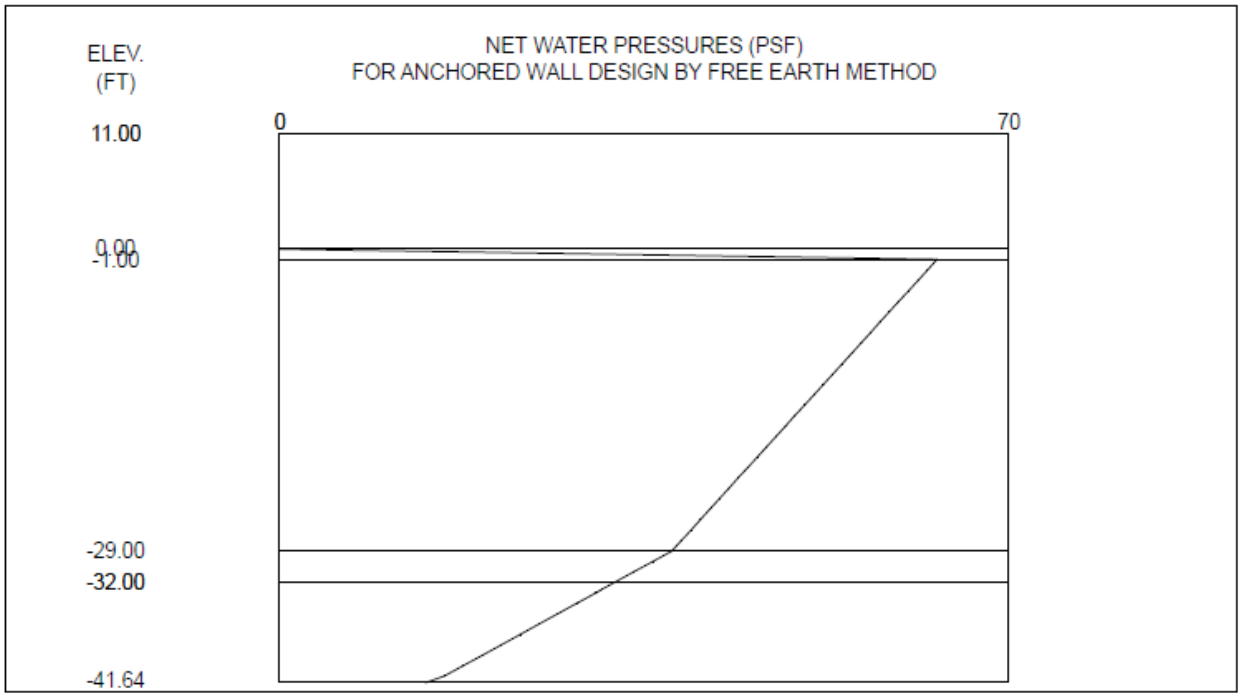

Figure G.3. Net Water Pressures for Load Case A1 – 10-Year Low Tide

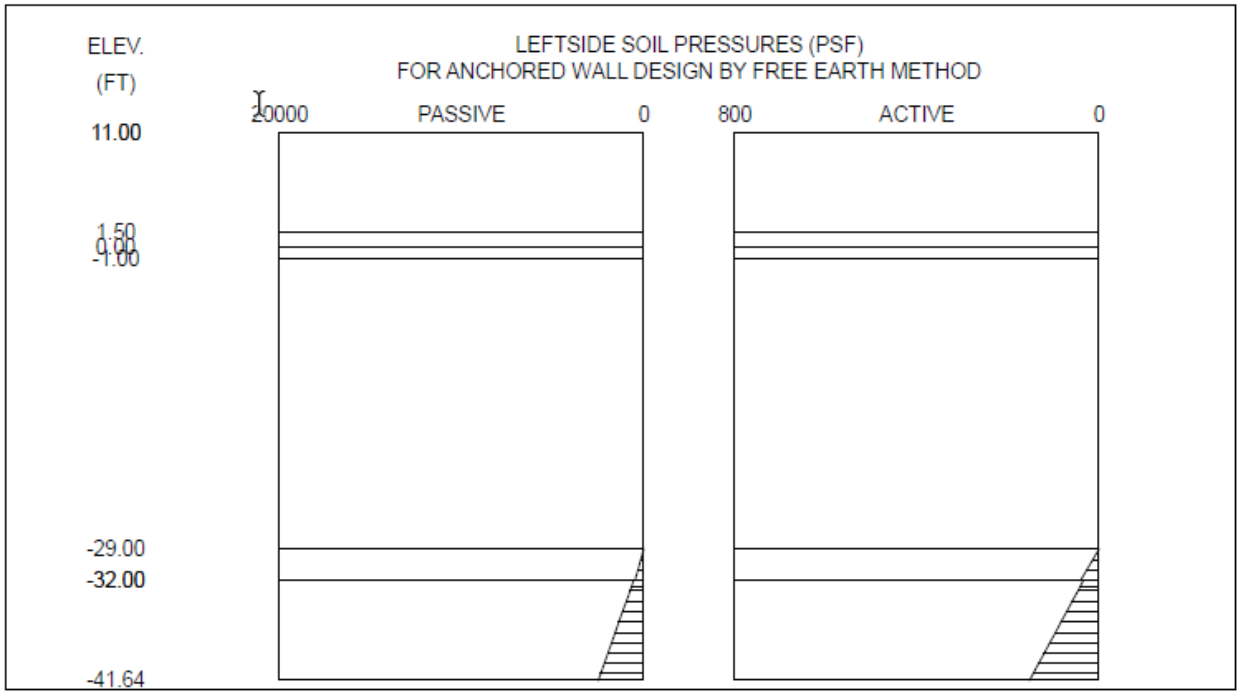

Figure G.4. Leftside Soil Pressures for Load Case A1 – 10-Year Low Tide

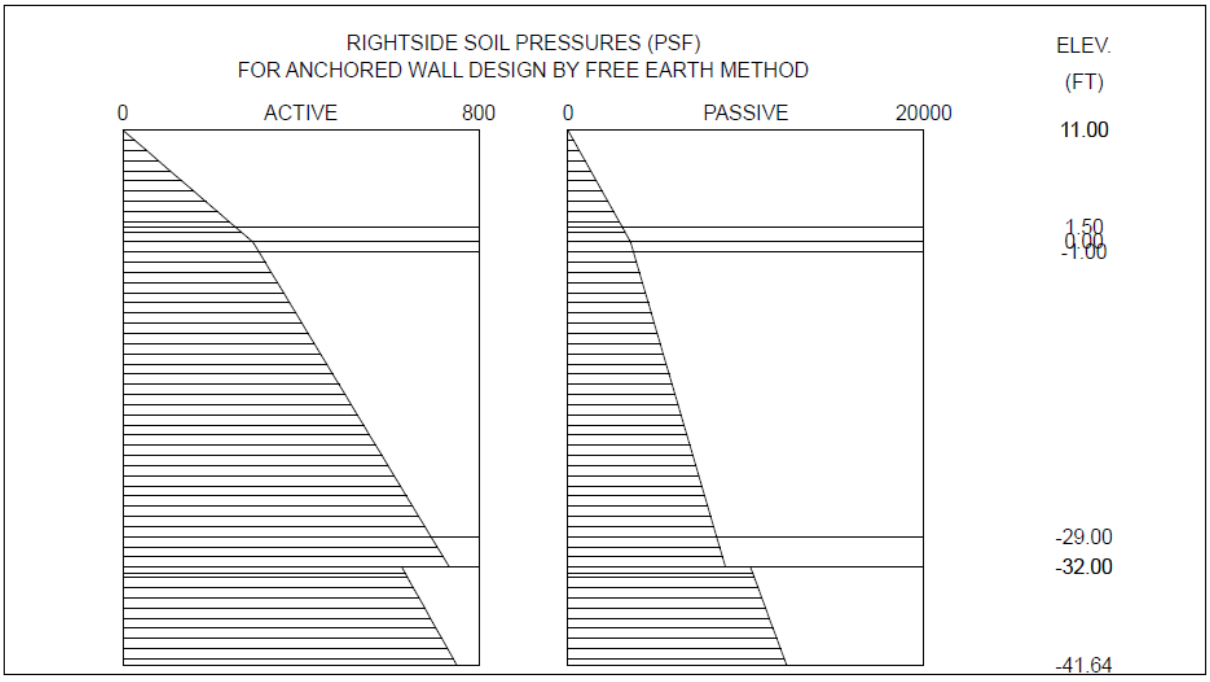

Figure G.5. Rightside Soil Pressures for Load Case A1 – 10-Year Low Tide

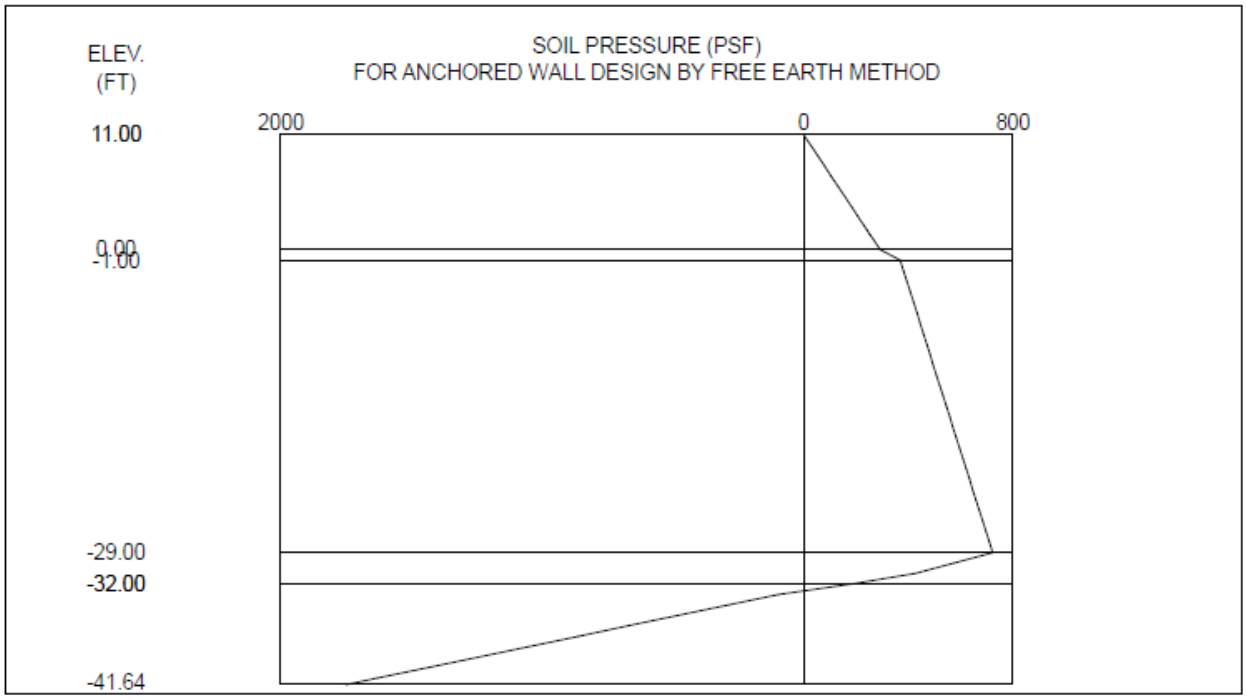

Figure G.6. Net Soil Pressures for Load Case A1 – 10-Year Low Tide

G.7. Global Stability.

G.7.1. The global stability performance mode was assessed for all load cases using drained strength (S) conditions to determine whether the soil mass around the wall will rotate or translate in the absence of structural support. The computer program SLOPE/W in GeoStudio 2016 (Version 8.16.2.14053, GeoSlope International) was used to run the stability analyses for four load cases: A1 – 10-year low tide, A2 – 10-year low tide with surcharge, A3 – 100-year low tide, and A4 – 1,000-year low tide. Spencer's limit equilibrium method was used to determine the stability factors of safety.

G.7.2. The sheet pile in this example is driven to 12.6 ft. penetration depth, which is the depth needed to satisfy rotational stability (see paragraph G.6.6). The anchor consists of a continuous sheet pile wall installed 81 ft. behind the sheet pile retaining the soil. This distance is required to allow the anchor to develop full passive pressure without adding additional load on the retaining sheet pile wall per section 10.5.2. Therefore, the analyses evaluated failure surfaces passing behind the sheet pile anchor and below the retaining sheet pile wall depth or deeper. Table G.3 below summarizes the results of the global stability analyses. Figure G.7 shows the results for the A4 – 1,000-year load case.

Table G.3
Results of Global Stability Analysis Using SLOPE/W

Load Case	Load Category	Shear Strength	Canal Side Water Elevation (ft)	Retained Soil Side Groundwater Elevation (ft)	Required Factor of Safety	Calculated Factor of Safety
A1	Usual	Drained, S	-1.0	0.0	1.6	2.4
A2	Unusual	Drained, S	-1.0	0.0	1.5	2.3
A3	Unusual	Drained, S	-2.0	0.0	1.5	2.3
A4	Extreme	Drained, S	-3.0	0.0	1.4	2.2

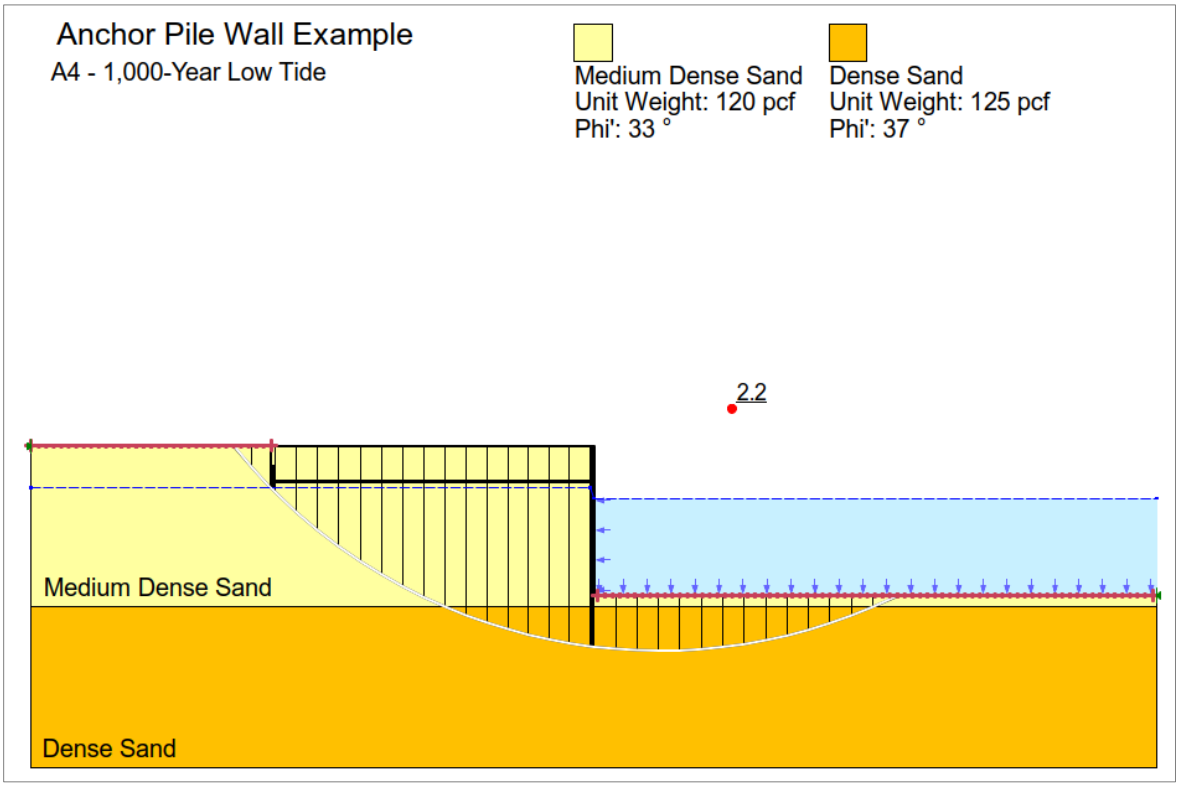

Figure G.7. Global Stability Results – A4 – 1,000-Year Low Tide

G.8. Anchor Stability.

G.8.1. The anchor will be a continuous sheet pile wall installed a certain distance shoreward from the sheet pile wall that is retaining the soil. The allowable anchor capacity must exceed the maximum anchor force calculated in the rotational stability analysis per section 10.5.1.

G.8.2. Per Table G.2 in paragraph G.6.5, the A2 – 10-year low tide with surcharge load case produced the maximum anchor force:

T_a = 12.4 kip/ft

G.8.3. Per paragraph 10.5.2.4, the continuous anchor wall capacity for this project's soil conditions is:

$$C_{ac} = P_P - P_A = \frac{\gamma H^2}{2}(K_P - K_A)$$

H = total sheet pile depth = 40 ft + 12.6 ft = 52.6 ft

γ = soil unit weight = 120 pcf

For design:

$C_{ac} \geq T_a$

Therefore:

$$T_a \leq \frac{\gamma H^2}{2}(K_P - K_A)$$

Rearranging,

$$H \geq \sqrt{\frac{2\,T_a}{\gamma(K_P - K_A)}}$$

G.8.4. The earth pressure coefficients are calculated assuming zero wall friction and the same mobilized shear strength parameters used in the rotational stability analysis. Per section 6.7.6.4 the developed angles of friction are:

$\tan\phi'_d = \tan\phi/FS = \tan 33°/1 = 0.649 \rightarrow \phi' = 33°$ (*active*)

$\tan\phi'_d = \tan\phi/FS = \tan 33°/1.5 = 0.43 \rightarrow \phi' = 23.4°$ (*passive*)

The lateral earth pressure coefficients are:

$$K_A = \frac{(1-\sin\phi'_d)}{(1+\sin\phi'_d)} = \frac{(1-\sin 33)}{(1+\sin 33)} = 0.30$$

$$K_P = \frac{(1+\sin\phi'_d)}{(1-\sin\phi'_d)} = \frac{(1+\sin 23.4)}{(1-\sin 23.4)} = 2.3$$

The minimum required continuous anchor wall bottom depth is:

$$H = \sqrt{\frac{2\,(12.4\frac{kip}{ft})}{0.12kcf\,(2.3-0.3)}} = 10.2 \text{ ft}$$

G.8.5. The top of the continuous anchor wall must be a certain distance, h, below the ground surface such that:

$1/3 < h/H < 1/2 \rightarrow 1/3 < h/10.2 \text{ ft} < 1/2 \rightarrow 3.4 < h < 5.1$

Select h = 4 ft

G.8.6. According to section 10.5.2, the continuous anchor wall must be located a minimum distance behind the sheet pile wall such that the active wall zone behind the full-length sheet pile wall is not in conflict with the passive zone in front of the continuous anchor wall. Figure G.8 shows the geometry of the sheet pile wall retaining the soil and the continuous anchor wall. The continuous anchor wall also cannot intersect the line ac, otherwise interaction between this wall and the retaining wall will increase soil pressures on the retaining wall.

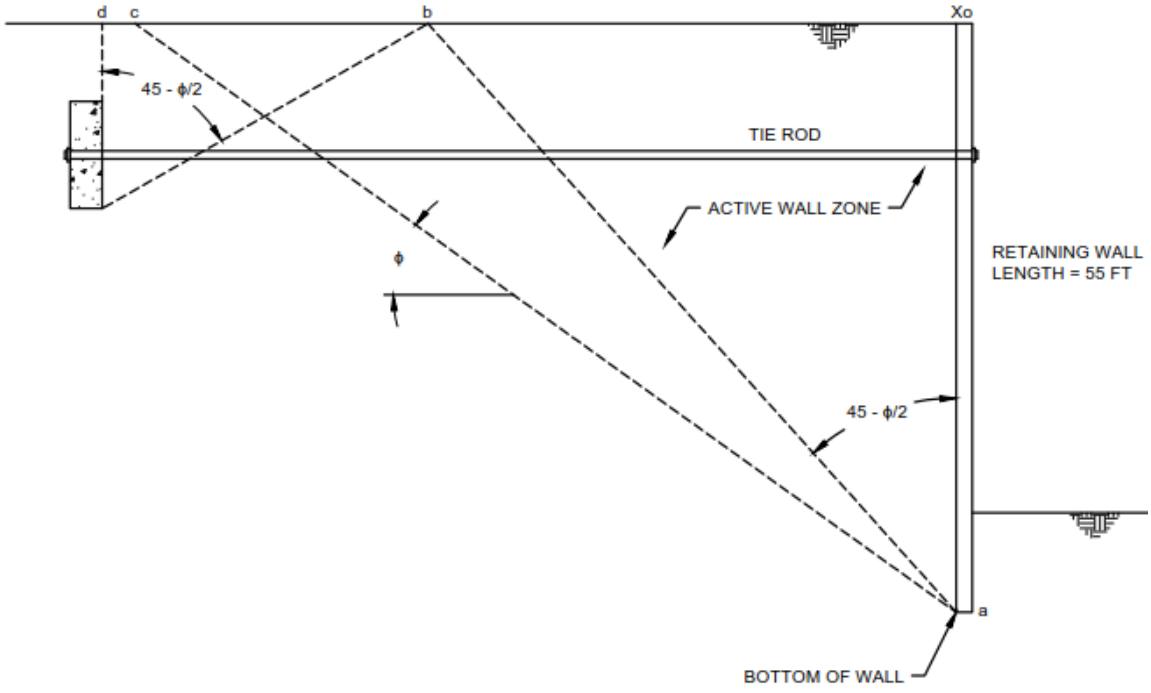

Figure G.8. Sheet Pile Wall Geometry

G.8.7. While the soil profile along the wall consists of medium dense sand (φ = 33°) for the upper 43 ft. of wall and dense sand (φ = 37°) for the bottom 9.6 ft. of wall, assume φ = 33° for a

conservative spacing. The relevant angles to determine the continuous anchor wall location in Figure G.8 are:

$\phi' = 33°$

$45° - \phi'/2 = 45° - 33°/2 = 28.5°$

$45° + \phi'/2 = 45° + 33°/2 = 61.5°$

G.8.8. The calculated distances are:

$x_o b$ = (wall length)tan(28.5°) = (52.6 ft)tan(28.5°) = 28.6 ft

$x_o c$ = (wall length)tan(90°–33°) = (52.6 ft)tan(57°) = 81.0 ft

bd = (H)tan(61.5°) = (10.2 ft)tan(61.5°) = 18.8 ft

G.8.9. The distance ($x_o b$) + bd = 28.6 ft + 18.8 ft = 47.4 ft is less than $x_o c$ = 81.0 ft. Therefore, place the continuous anchor wall at a distance of 81.0 ft. from the sheet pile wall retaining the soil.

G.9. Internal Erosion. The potential for internal erosion was evaluated by calculating the factor of safety based on vertical gradient at the sheet pile tip. The factor of safety exceeds the minimum factors of safety for each load condition per Table 7.3 in paragraph 7.7.6.

G.10. Settlement. There is sufficient friction between the sand deposit and the sheet pile wall to prevent sheet pile wall settlement. The anchored retaining wall design does not include any substantial grade changes so ground settlement adjacent to the sheet pile wall is not a concern. Placement and compaction of the sand backfill will be difficult due to the relatively close spacing of the tie rods. Tie rods should be encased in PVC conduit to mitigate against potential settlement effects. Sand fill material should be placed and compacted carefully with hand compaction equipment around the PVC-encased tie rods to mitigate against settlement.

G.11. Liquefaction and Cyclic Softening. As stated in section G.4.5, the earthquake ground motions are relatively low and will not induce liquefaction of the sand or cyclic softening of the occasional thin clay layers. Sand backfill around the tie rods should be carefully placed and compacted with hand-operated equipment to prevent the potential for liquefaction.

G.12. Strength of Structural Elements.

G.12.1. Structural Analysis. The USACE CASE program CWALSHT was used to determine the forces and moments necessary for the design of the anchored wall structural elements. According to paragraph 10.8.1.1 of this manual, the Free-Earth Support Method was used for design of the sheet pile with active and passive factors of safety set to 1.0 to avoid compounding factors of safety. According to paragraph 10.8.1.2, the factored reactions are used

for design of the anchors. The applicable load cases, water levels, and maximum bending moments and shears are shown in Table G.4.

Table G.4
Load Cases for Strength Design

Load Case	Canal Side Water Elevation (ft)	Retained Soil Side Groundwater Elevation (ft)	Maximum Moment, M_{max} (kip-ft/ft)	Maximum Shear, V_{max} (kip/ft)	Anchor Reaction, T_{ah} (kip)
A1	-1.0	0.0	84.8	8.5	9.7
A2	-1.0	0.0	94.2	9.7	11.5
A3	-2.0	0.0	93.0	9.5	10.5
A4	-3.0	0.0	101.4	10.1	11.3

G.12.2. The CWALSHT input and output are presented below for the A4 – 1,000-year low tide case. The moment diagram is shown in Figure G.9. The shear diagram is shown in Figure G.10.

CWALSHT input:

```
'EM 1110-2-2502 EXAMPLE - PASSIVE SINGLE ANCHOR PILE WALL - A4 1,000-YEAR LOW TIDE for Mmax
CONTROL  ANCHORED  DESIGN  1.00  1.00
WALL   11    1.5
SURFACE RIGHTSIDE  1    0    11
SURFACE LEFTSIDE   1    0   -29
SOIL RIGHTSIDE  STRENGTHS   2
   120    110    33    0    24    0   -32   0
   125    120    37    0    24    0
SOIL LEFTSIDE  STRENGTHS   2
   120    110    33    0    24    0   -32   0
   125    120    37    0    24    0          WATER ELEVATIONS   64    0   -3    0  AUTOMATIC

Finished
```

CWALSHT output (with intermediate pressures and fixed earth results omitted):

```
PROGRAM CWALSHT-DESIGN/ANALYSIS OF ANCHORED OR CANTILEVER SHEET PILE WALLS
                          BY CLASSICAL METHODS
  DATE: 13-FEBRUARY-2020                                        TIME: 18:01:45

                             ****************
                             *  INPUT DATA  *
                             ****************

        I.--HEADING
       'EM 1110-2-2502 EXAMPLE - PASSIVE SINGLE ANCHOR PILE WALL - A4 1,000-YEAR LOW TIDE FOR
MMAX

       II.--CONTROL
          ANCHORED WALL DESIGN
          FACTOR OF SAFETY FOR ACTIVE PRESSURES  = 1.00
          FACTOR OF SAFETY FOR PASSIVE PRESSURES = 1.00

      III.--WALL DATA
          ELEVATION AT TOP OF WALL    = 11.00 FT
          ELEVATION AT ANCHOR         = 1.50 FT
```

```
  IV.--SURFACE POINT DATA

           IV.A.--RIGHTSIDE
              DIST. FROM     ELEVATION
              WALL (FT)        (FT)
                   0.00         11.00

           IV.B.--LEFTSIDE
              DIST. FROM     ELEVATION
              WALL (FT)        (FT)
                   0.00        -29.00

       V.--SOIL LAYER DATA

          V.A.--RIGHTSIDE
              LEVEL 2 FACTOR OF SAFETY FOR ACTIVE PRESSURE  = DEFAULT
              LEVEL 2 FACTOR OF SAFETY FOR PASSIVE PRESSURE = DEFAULT

                ANGLE OF         ANGLE OF                          <-SAFETY->
   SAT.   MOIST  INTERNAL  COH-     WALL    ADH-    <--BOTTOM-->  <-FACTOR->
  WGHT.   WGHT.  FRICTION  ESION  FRICTION  ESION   ELEV.  SLOPE  ACT. PASS.
  (PCF)   (PCF)    (DEG)   (PSF)    (DEG)   (PSF)  (FT)   (FT/FT)
 120.00  110.00    33.00    0.00    24.00    0.00 -32.00   0.00   DEF  DEF
 125.00  120.00    37.00    0.00    24.00    0.00                 DEF  DEF

          V.B.--LEFTSIDE
              LEVEL 2 FACTOR OF SAFETY FOR ACTIVE PRESSURE  = DEFAULT
              LEVEL 2 FACTOR OF SAFETY FOR PASSIVE PRESSURE = DEFAULT

                ANGLE OF         ANGLE OF                          <-SAFETY->
   SAT.   MOIST  INTERNAL  COH-     WALL    ADH-    <--BOTTOM-->  <-FACTOR->
  WGHT.   WGHT.  FRICTION  ESION  FRICTION  ESION   ELEV.  SLOPE  ACT. PASS.
  (PCF)   (PCF)    (DEG)   (PSF)    (DEG)   (PSF)  (FT)   (FT/FT)
 120.00  110.00    33.00    0.00    24.00    0.00 -32.00   0.00   DEF  DEF
 125.00  120.00    37.00    0.00    24.00    0.00                 DEF  DEF

      VI.--WATER DATA
          UNIT WEIGHT         = 64.00 (PCF)
          RIGHTSIDE ELEVATION = 0.00 (FT)
          LEFTSIDE ELEVATION  = -3.00 (FT)
          SEEPAGE ELEVATION   = 0.00 (FT)
          SEEPAGE GRADIENT    = AUTOMATIC

     VII.--VERTICAL SURCHARGE LOADS
          NONE

    VIII.--HORIZONTAL LOADS
          NONE



PROGRAM CWALSHT-DESIGN/ANALYSIS OF ANCHORED OR CANTILEVER SHEET PILE WALLS
                          BY CLASSICAL METHODS
  DATE: 13-FEBRUARY-2020                                  TIME: 18:01:47

                        ****************************
                        *  SUMMARY OF RESULTS FOR  *
                        *   ANCHORED WALL DESIGN   *
                        ****************************

      I.--HEADING
       'EM 1110-2-2502 EXAMPLE - PASSIVE SINGLE ANCHOR PILE WALL - A4 1,000-YEAR LOW TIDE FOR
MMAX

     II.--SUMMARY
```

RIGHTSIDE SOIL PRESSURES DETERMINED BY COULOMB COEFFICIENTS
AND THEORY OF ELASTICITY EQUATIONS FOR SURCHARGE LOADS.

LEFTSIDE SOIL PRESSURES DETERMINED BY COULOMB COEFFICIENTS
AND THEORY OF ELASTICITY EQUATIONS FOR SURCHARGE LOADS.

METHOD	:	FREE EARTH	FIXED EARTH
WALL BOTTOM ELEVATION (FT)	:	-36.78	-42.91
PENETRATION (FT)	:	7.78	13.91
MAXIMUM BENDING MOMENT (LB-FT)	:	-1.0137E+05	-7.2269E+04
AT ELEVATION (FT)	:	-17.35	-14.71
MAXIMUM SCALED DEFLECTION (LB-IN^3)	:	2.5726E+10	1.6290E+10
AT ELEVATION (FT)	:	-17.00	-16.00
ANCHOR FORCE (LB)	:	1.1257E+04	9.6245E+03
SEEPAGE GRADIENT	:	0.0673	0.0530

NOTE: DIVIDE SCALED DEFLECTION MODULUS OF
ELASTICITY IN PSI TIMES PILE MOMENT
OF INERTIA IN IN^4 TO OBTAIN DEFLECTION
IN INCHES.

PROGRAM CWALSHT-DESIGN/ANALYSIS OF ANCHOREDOR CANTILEVER SHEET PILE WALLS
BY CLASSICAL METHODS
DATE: 13-FEBRUARY-2020 TIME: 18:01:47

****
* COMPLETE OF RESULTS FOR *
* ANCHORED WALL DESIGN *
* BY FREE EARTH METHOD *
****

I.--HEADING
'EM 1110-2-2502 EXAMPLE - PASSIVE SINGLE ANCHOR PILE WALL - A4 1,000-YEAR LOW TIDE FOR MMAX

II.--RESULTS (ANCHOR FORCE= 11257. (LB))

ELEVATION (FT)	BENDING MOMENT (LB-FT)	SHEAR (LB)	SCALED DEFLECTION (LB-IN^3)	NET PRESSURE (PSF)
11.00	0.0000E+00	0.	-2.0171E+10	0.00
10.00	4.4249E+00	13.	-1.8051E+10	26.55
9.00	3.5399E+01	53.	-1.5931E+10	53.10
8.00	1.1947E+02	119.	-1.3810E+10	79.65
7.00	2.8319E+02	212.	-1.1690E+10	106.20
6.00	5.5311E+02	332.	-9.5691E+09	132.75
5.00	9.5578E+02	478.	-7.4471E+09	159.30
4.00	1.5177E+03	650.	-5.3235E+09	185.85
3.00	2.2655E+03	850.	-3.1973E+09	212.39
2.00	3.2257E+03	1075.	-1.0671E+09	238.94
1.50+	3.7938E+03	1198.	0.0000E+00	252.22
1.50-	3.7938E+03	-10059.	0.0000E+00	252.22
1.00	-1.2035E+03	-9929.	1.0683E+09	265.49
0.00	-1.0996E+04	-9651.	3.2013E+09	292.04
-1.00	-2.0488E+04	-9321.	5.3153E+09	366.29
-2.00	-2.9614E+04	-8918.	7.3939E+09	440.54
-3.00	-3.8299E+04	-8440.	9.4215E+09	514.79
-4.00	-4.6481E+04	-7920.	1.1383E+10	525.03
-5.00	-5.4137E+04	-7390.	1.3264E+10	535.28
-6.00	-6.1258E+04	-6850.	1.5052E+10	545.53

-7.00	-6.7833E+04	-6299.	1.6734E+10	555.78
-8.00	-7.3853E+04	-5738.	1.8299E+10	566.02
-9.00	-7.9307E+04	-5167.	1.9736E+10	576.27
-10.00	-8.4184E+04	-4586.	2.1036E+10	586.52
-11.00	-8.8475E+04	-3994.	2.2191E+10	596.77
-12.00	-9.2169E+04	-3392.	2.3193E+10	607.01
-13.00	-9.5256E+04	-2780.	2.4036E+10	617.26
-14.00	-9.7726E+04	-2158.	2.4715E+10	627.51
-15.00	-9.9568E+04	-1525.	2.5224E+10	637.76
-16.00	-1.0077E+05	-882.	2.5562E+10	648.00
-17.00	-1.0133E+05	-229.	2.5726E+10	658.25
-18.00	-1.0123E+05	434.	2.5714E+10	668.50
-19.00	-1.0046E+05	1108.	2.5528E+10	678.75
-20.00	-9.9008E+04	1792.	2.5168E+10	688.99
-21.00	-9.6870E+04	2486.	2.4638E+10	699.24
-22.00	-9.4033E+04	3190.	2.3940E+10	709.49
-23.00	-9.0487E+04	3905.	2.3079E+10	719.73
-24.00	-8.6220E+04	4630.	2.2063E+10	729.98
-25.00	-8.1224E+04	5365.	2.0897E+10	740.23
-26.00	-7.5487E+04	6110.	1.9592E+10	750.48
-27.00	-6.9000E+04	6866.	1.8156E+10	760.72
-28.00	-6.1752E+04	7632.	1.6600E+10	770.97
-29.00	-5.3733E+04	8408.	1.4939E+10	781.22
-30.00	-4.4992E+04	9017.	1.3184E+10	437.44
-31.00	-3.5814E+04	9283.	1.1352E+10	93.65
-31.16	-3.4302E+04	9290.	1.1047E+10	0.00
-32.00	-2.6580E+04	9089.	9.4578E+09	-481.42
-33.00	-1.7856E+04	8238.	7.5177E+09	-1220.08
-34.00	-1.0312E+04	6764.	5.5466E+09	-1727.45
-35.00	-4.4964E+03	4783.	3.5575E+09	-2234.83
-36.00	-9.1540E+02	2294.	1.5602E+09	-2742.20
-36.78	0.0000E+00	0.	0.0000E+00	-3138.15

NOTE: DIVIDE SCALED DEFLECTION MODULUS OF ELASTICITY IN PSI TIMES PILE MOMENT OF INERTIA IN IN^4 TO OBTAIN DEFLECTION IN INCHES.

III.--WATER AND SOIL PRESSURES

		<----------SOIL PRESSURES---------->			
	WATER	<----LEFTSIDE----->		<---RIGHTSIDE---->	
ELEVATION (FT)	PRESSURE (PSF)	PASSIVE (PSF)	ACTIVE (PSF)	ACTIVE (PSF)	PASSIVE (PSF)
11.00	0.	0.	0.	0.	0.
10.00	0.	0.	0.	27.	744.
9.00	0.	0.	0.	53.	1488.
8.00	0.	0.	0.	80.	2233.
7.00	0.	0.	0.	106.	2977.
6.00	0.	0.	0.	133.	3721.
5.00	0.	0.	0.	159.	4465.
4.00	0.	0.	0.	186.	5210.
3.00	0.	0.	0.	212.	5954.
2.00	0.	0.	0.	239.	6698.
1.50	0.	0.	0.	252.	7070.
1.00	0.	0.	0.	265.	7442.
0.00	0.	0.	0.	292.	8186.
-1.00	61.	0.	0.	307.	8594.
-2.00	121.	0.	0.	321.	9002.
-3.00	182.	0.	0.	336.	9410.
-4.00	178.	0.	0.	350.	9818.
-5.00	175.	0.	0.	365.	10226.
-6.00	172.	0.	0.	379.	10634.
-7.00	168.	0.	0.	394.	11043.
-8.00	165.	0.	0.	408.	11451.
-9.00	161.	0.	0.	423.	11859.

-10.00	158.	0.	0.	438.	12267.
-11.00	155.	0.	0.	452.	12675.
-12.00	151.	0.	0.	467.	13083.
-13.00	148.	0.	0.	481.	13491.
-14.00	145.	0.	0.	496.	13899.
-15.00	141.	0.	0.	510.	14307.
-16.00	138.	0.	0.	525.	14715.
-17.00	134.	0.	0.	539.	15123.
-18.00	131.	0.	0.	554.	15531.
-19.00	128.	0.	0.	569.	15939.
-20.00	124.	0.	0.	583.	16347.
-21.00	121.	0.	0.	598.	16755.
-22.00	117.	0.	0.	612.	17163.
-23.00	114.	0.	0.	627.	17571.
-24.00	111.	0.	0.	641.	17979.
-25.00	107.	0.	0.	656.	18387.
-26.00	104.	0.	0.	670.	18795.
-27.00	100.	0.	0.	685.	19203.
-28.00	97.	0.	0.	700.	19611.
-29.00	94.	0.	0.	714.	20019.
-30.00	87.	350.	12.	729.	20427.
-31.00	80.	699.	25.	743.	20835.
-31.16	79.	756.	27.	746.	20901.
-32.00+	73.	1049.	37.	758.	21243.
-32.00-	73.	1401.	32.	647.	28369.
-33.00	67.	1913.	44.	661.	28959.
-34.00	60.	2426.	55.	674.	29549.
-35.00	53.	2938.	67.	688.	30139.
-36.00	46.	3450.	79.	701.	30730.
-36.78	39.	3850.	88.	712.	31191.

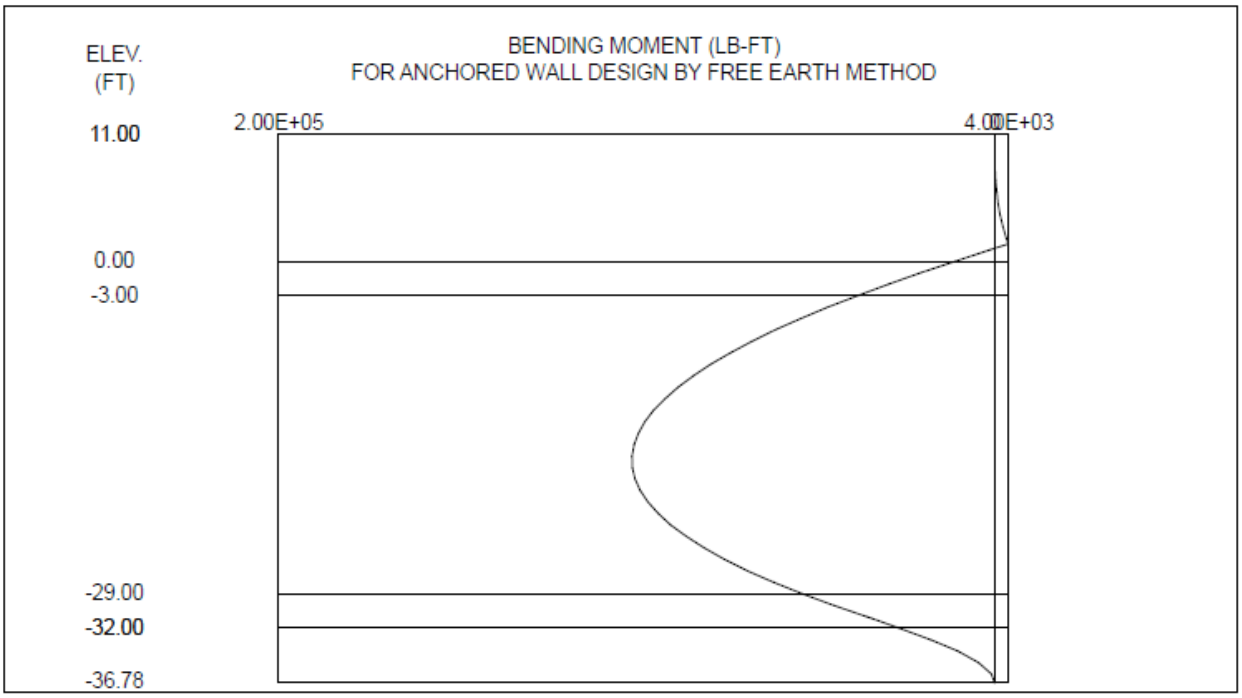

Figure G.9. Bending Moment for Load Case A4 – 1,000-Year Low Tide for M_{max}

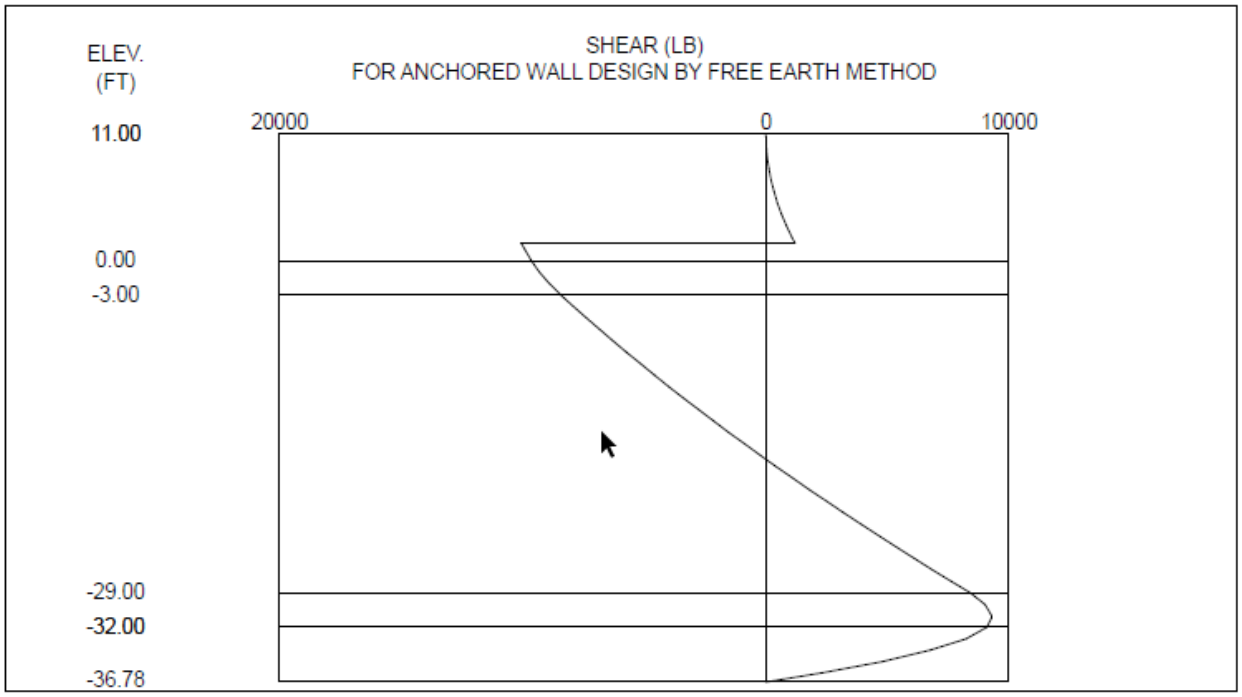

Figure G.10. Shear for Load Case A4 – 1,000-Year Low Tide for M_{max}

G.12.3. Steel Sheet Pile Design.

G.12.3.1. The sheet pile design is be performed using Load and Resistance Factor Design (LRFD) with a single load factor according to paragraph 9.7.4.1. The unfactored maximum shears and maximum moments are provided in Table G.4. Try PZ 27 sheet pile.

G.12.3.2. Per paragraph 10.8.2.1, the design moment is the maximum moment reduced by Rowe's reduction factor, R_m, as follows:

$$M_{des} = M_{max} R_m$$

G.12.3.3. Obtain R_m by using Rowe's moment reduction curves in Figure 10.7. This requires calculating the flexibility number ρ and converting it to a $\log_{10}$ value, and calculating the wall height ratio α and anchor depth ratio β:

$$\rho = H^4/EI = (40 \text{ ft}+12.6 \text{ ft})^4/[(29{,}000{,}000 \text{ psi})*(184.2 \text{ in}^4)] = 0.00143 \text{ ft}^4/\text{psi}$$

H = total length of the sheet piling (ft)

E = modulus of elasticity of the pile material (psi)

I = moment of inertia (in^4) per foot of wall

$\log_{10}(0.00143) = -2.84$

$\alpha H/H$ = 40 ft/52.6 ft = 0.76

$\beta H/H$ = 8.5 ft/52.6 ft = 0.16

Figure G.11 shows that the Rowe reduction factors are R_m = 0.57 for loose sand and R_m = 0.42 for dense sand.

An average reduction factor for medium dense sand is:

R_m (medium dense sand) = (0.57+0.42)/2 = 0.50

G.12.3.4. The sheet pile wall soil profile consists of 43 ft. of medium dense sand and 9.6 ft. of dense sand. An approximate single reduction factor for this wall is the weighted average:

R_m *(weighted average)* = (43 ft/52.6 ft)*0.57+(9.6 ft/52.6 ft)*0.42 = 0.54

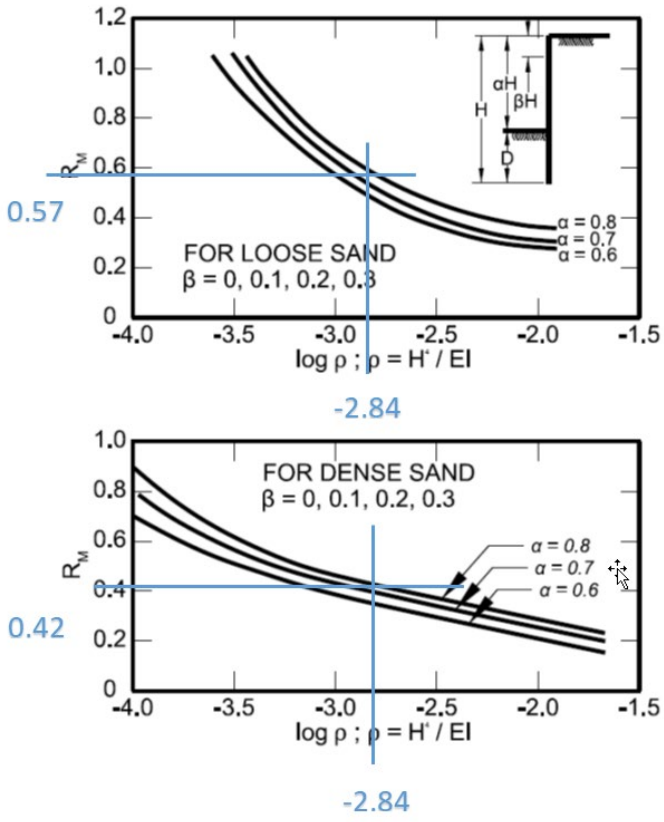

Figure G.11. Rowe's Reduction Factors for Sheet Pile Wall

G.12.3.5. If the moment reduction factor is combined with the load factor, the design moments for the various load cases will be:

Design Moment (A1) M_u = (84.8 kip-ft/ft) * (0.54)*(1.8) = 82.4 ft-k/ft
Design Moment (A2) M_u = (94.2 kip-ft/ft) * (0.54)*(1.4) = 71.2 ft-k/ft
Design Moment (A3) M_u = (93.0 kip-ft/ft) * (0.54)*(1.4) = 70.3 ft-k/ft
Design Moment (A4) M_u = (101.4 kip-ft/ft) * (0.54)*(1.2) = 65.7 ft-k/ft

G.12.3.6. The design shears with the load factor applied are:

Design Shear (A1) V_u = 8.5 kip/ft * (1.8) = 15.3 k/ft
Design Shear (A2) V_u = 9.7 kip/ft * (1.4) = 13.6 k/ft
Design Shear (A3) V_u = 9.5 kip/ft * (1.4) = 13.3 k/ft
Design Shear (A4) V_u = 10.1 kip/ft * (1.0) = 12.1 k/ft

G.12.3.7. Based on the above load case A1 results in the highest moment and shear. Check the moment from load case A1 against the nominal moment according to ANSI/AISC 360-16 (AISC):

$\phi M_n \geq M_u$,

$M_n = F_{cr}S_{min}$ (from AISC Equation F12-1)

Where,

M_n = nominal moment

F_{cr} – For driven PZ-27 sheet pile the members are restrained against lateral torsional buckling and the pile has sufficient thickness against local buckling; therefore, $F_{cr} = F_{y.}$

$S_{min} = S_x$

F_y = yield strength of sheet pile = 50 ksi

S_x = elastic section modulus of sheet pile (PZ27) = 30.2 in^3/ft

So, M_n = (50 ksi)*(30.2 in^3/ft) = 1,510 kip-in/ft = 125.8 kip-ft/ft

G.12.3.8. The strength reduction factor for bending, φ_b, is 0.9 and the capacity of the sheet pile in bending is:

$\phi_b M_n$ = (0.9)*(125.8 kip-ft/ft) = 113.3 kip-ft/ft > M_u = 82.4 kip-ft/ft, therefore, sheet pile is OK in bending.

G.12.3.9. Similarly, check the shear from load case A1 against the nominal shear, V_n

$\phi V_n \geq V_u$, where $V_n = 0.6(F_y)(A_w)$ (from AISC equation G2-1)

and $A_w = A_v = (t_w h)/w$ (from Equation 9.4)

A_v = area of sheet pile (PZ27) = 0.375 in (12 in)/1.5 ft = 3 in^2/ft

C_v = web shear coefficient = 1.0 (conservative since it cannot be less than 1.0)

So, V_n = 0.6*(50 ksi)*(3 in^2/ft)*(1.0) = 90 k/ft

G.12.3.10. The strength reduction factor for shear, ϕ_v, is 0.9 and the capacity of the sheet pile in shear is:

$\phi_v V_n$ = (0.9)*(238.2 k/ft) = 214.38 k/ft > V_u = 15.3 k/ft, therefore, sheet pile is OK in shear.

G.12.4. Anchor Component Design.

G.12.4.1. Design Anchor Rod Force. The tie rod will be perpendicular to the plane of the sheet pile wall. Therefore, the tie rod force, T_a, is equal to the maximum anchor force from the CWALSHT analysis for rotational stability. The tie rod force for each of the load cases and as shown in Table G.2 are:

Load Case A1: T_a = 10.7 kip/ft
Load Case A2: T_a = 12.4 kip/ft
Load Case A3: T_a = 11.4 kip/ft
Load Case A4: T_a = 11.9 kip/ft

G.12.4.2. Therefore, the maximum anchor force is T_a of 12.4 k/ft from load case A2, but load cases A1 and A2 must also be checked as the design for those load cases uses a lower allowable stress level.

G.12.5. Anchor Rod Design.

G.12.5.1. The anchor will be designed based on section 10.8.4. To perform the design, the force on a single tie rod, T_{rod}, must first be calculated. To determine T_{rod} use a spacing, s, of 5 ft. and compute T_{rod} for the anchor forces computed above for load cases A1, A2, and A4.

Load case A1: $T_{rod} = sT_a$ = (5 ft)*(10.7 k/ft) = 53.5 k
Load case A2: $T_{rod} = sT_a$ = (5 ft)*(12.4 k/ft) = 62.0 k
Load case A4: $T_{rod} = sT_a$ = (5 ft)*(11.9 k/ft) = 59.3 k

G.12.5.2. Assume a 75 ksi tie rod will be used (F_y = 75 ksi and F_u = 100 ksi). The allowable tension, f_t, in the tie rod is as follows:

$f_t = 0.40F_y = 0.40*(75\ ksi) = 30$ ksi

G.12.5.3. Now check the required gross area of the tie rod (unthreaded length) for load cases A2, which as the highest anchor load:

Load case A2: Minimum $A_{gross} = T_{rod}/F_t = 62.0$ k/30.0 ksi = 2.07 in^2

Therefore, load case A1 controls, resulting in a minimum diameter,
$d_{gross} = (4A_{gross}/\pi)^{1/2} = [4*(2.07 \text{ in}^2)/\pi]^{1/2} = 2.34$ in

G.12.6. Design of Wales.

G.12.6.1. Calculations to size the wale cross section is performed according to ANSI/AISC 360-16. The maximum bending moment of the wale can be approximated by the following equation in paragraph 10.8.5.1:

$$M_{max} = T_{ah}s^2/10$$

Where s is the anchor spacing and T_{ah} is the anchor force.

G.12.6.2. Where T_{ah} is the anchor force per foot of wall and is from the CWALSHT analyses using a factor of safety of 1.0. The resulting anchor forces must be factored using the same load factors to compute the design moments and shears resulting in anchor forces for each load case as follows:

Load Case A1: T_a = (9.70 kip/ft) * (1.8) = 17.5 kip/ft
Load Case A2: T_a = (11.5 kip/ft) * (1.4) = 16.1 k/ft
Load Case A3: T_a = (10.5 kip/ft) * (1.4) = 14.7 k/ft
Load Case A4: T_a = (11.3 lb/ft) * (1.2) = 13.6 k/ft

G.12.6.3. Load case A1 controls and the maximum bending moment can be calculated as follows:

$M_{max} = (17.5 \text{ k/ft})*(5 \text{ ft})^2/10 = 43.8$ k-ft

G.12.6.4. A C9x15 channel has a moment capacity, $\varphi_b M_n$, of 32.5 kip-ft. Therefore, if two C9x15 channels are placed back to back, the resulting moment capacity will 65 kip-ft, which is well above the maximum bending moment of 56.5 k-ft and is an acceptable design.

Appendix H
Design Example – Post-Tensioned Tieback Earth Retaining Wall

H.1. Problem Statement.

H.1.1. A channel widening project with an urban road above the retained soil is to be constructed. Figure H.1 shows a photo of an example of such a wall being constructed in Rochester, MN. To provide increased channel capacity, the retaining wall must be 30 feet (units are in English, see Appendix A for metric conversions) tall from top of wall to the dredge line. A portion of the road on the retained side of the wall is to remain in service throughout construction. Post-tensioned (P-T) tieback retaining walls are suitable since their top-down methods will not require excavation on the retained side of the wall and therefore, the roadway will remain usable.



Figure H.1. P-T Tieback Wall, Rochester, MN

H.1.2. The use of a top-down P-T anchor system allows for construction of the wall without excavating the retained soil. As discussed in Chapter 11, the majority of the deformations associated with soil strength mobilization within the zone of anchorage are taken out by post-tensioning of the anchors. With these considerations, a P-T tieback anchor system will limit the deformations of the roadway above the retained soil and allow for use of the

roadway during construction. The soil test borings did not encounter any hard materials that could be problematic when driving sheet piling. Based on these factors, a post-tensioned anchored piled wall system is assessed to be a suitable wall type.

H.1.3. The wall in this example will be designed according to Chapter 11. Anchor locations were selected based on experience and to provide a relatively uniform anchor demand among the three anchor rows.

H.1.4. Anchored retaining wall design must address seven performance modes: rotational stability, global stability, anchor stability, internal erosion, settlement, axial capacity of wall, and strength of structural elements.

H.2. Structure Classification. There is a road parallel to the channel that runs along the top of the soil retaining wall. Failure of the wall will cause the retained soil to slide into the channel, but there will be no loss of life or extreme economic damage. Therefore, according to section 3.2.1 of this manual, this wall is classified as a normal structure.

H.3. Site Information.

H.3.1. Site Information Category. The P-T tieback wall is a new structure that is required for the channel widening. The subsurface exploration consisted of drilling soil test borings every 350 feet along the centerline of the wall for the length of the proposed wall alignment. At every third centerline boring (approximately every 1,050 feet along alignment) two additional borings were drilled perpendicular to the wall alignment to assess the potential for variability of soil in anchor bond zone and in the passive zone of the wall. The centerline borings were drilled to a depth of 75 feet and the perpendicular borings were drilled to depths of approximately 45 feet below the retained backfill elevation and below the dredge elevation on the channel side. Standard penetration testing was performed at a minimum of 5-foot intervals.

H.3.2. The subsurface exploration exceeds the boring spacing requirements of Table 5.1. For the purposes of design, the structure will be classified as having ordinary site information according to section 5.2.5. Since the wall is a permanent construction and has a roadway above the retained soil, the wall will be designed using factors of safety for stringent displacement control according to Chapter 11 of this EM.

H.3.3. Topography and Bathymetry. A new survey provided sufficient topographic and bathymetric data along the channel.

H.3.4. Geology. Reach Selection and Analysis Cross Section. The data indicates that the geology, topography, and bathymetry data along the proposed retaining wall are sufficiently consistent, and the size of the project is sufficiently limited, that only one analysis cross section is necessary to design the retaining wall. Figure H.2 shows the analysis cross section for the retaining wall design.

H.3.5. Geotechnical. A geotechnical investigation was performed according to recommendations in Chapter 5 and paragraph H.3.1. Figure H.2 shows the anchored retaining wall soil profile with the design unit weight and strength parameters.

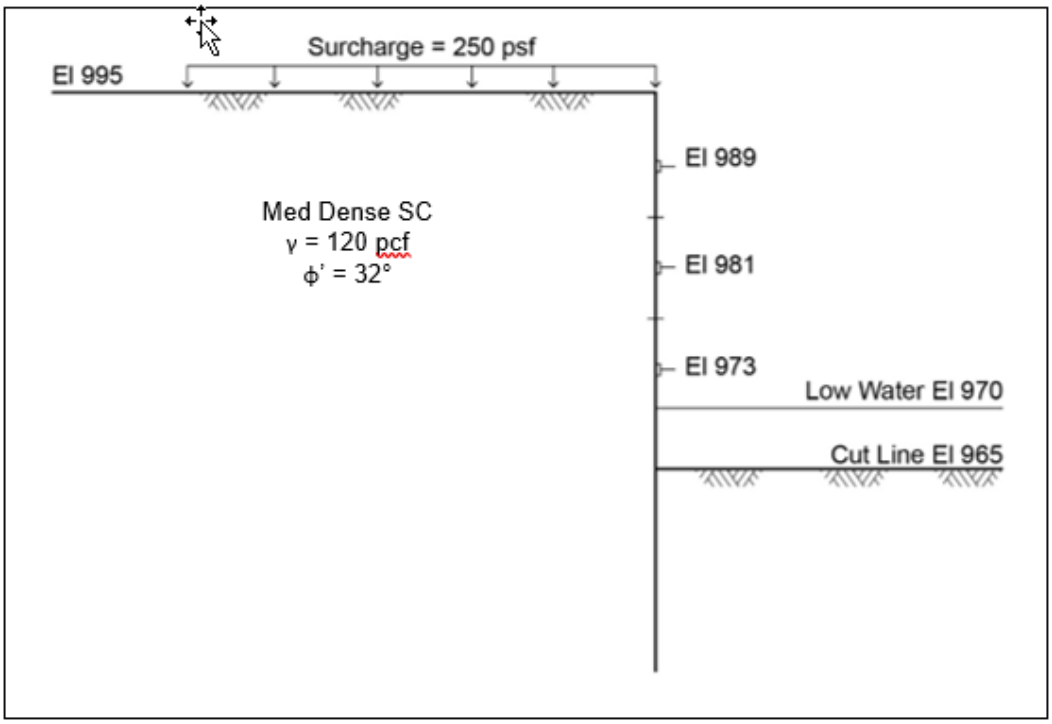

Figure H.2. Idealized Cross Section for Design

H.3.6. Environmental. A corrosion test suite was conducted on representative soil samples from the SPT borings. These tests included chloride and sulfate ion measurements, pH measurement, and electrical conductivity. The test results indicate that the soils and subsurface pore fluid is non-corrosive to concrete and metal.

H.3.7. Loads. The top of the retaining wall will be at an elevation of 995.0 feet. Relevant loads on the wall include gravity, hydrostatic and groundwater, earth pressure, and surcharge.

H.3.7.1. Gravity. The gravity load, in combination with the concrete facing on the front of the wall, is the dead weight of the sheet pile wall. This load is a permanent, usual load.

H.3.7.2. Hydrostatic and Groundwater. The hydrostatic and groundwater loads are water forces that are both above and below the ground and seepage forces. Figure H.2 shows the low water at elevation 970.0 feet. Usual and unusual water levels are as follows.

H.3.7.2.1. Usual. Driving side, elevation 970 feet; resisting side, elevation 970 feet.

H.3.7.2.2. Unusual Drawdown. Driving Side, elevation 967 feet; resisting side, elevation 965 feet (dry/dewatered stream with 2-foot drainage lag).

H.3.7.3. Unusual Surcharge. A 250 psf surcharge load is applied at the ground surface elevation of 995.0. Water level is equal on both sides of the wall at elevation 970.

H.4. Earth Pressure Coefficients.

H.4.1. Lateral earth pressure coefficients using developed shear strengths and peak (ultimate) shear strength are required for analyzing the performance modes. Lateral earth pressure coefficients are calculated differently for determining the total load and for evaluating rotational stability.

H.4.2. Earth Pressure Coefficients for Developing Apparent Earth Pressure Diagram. Since the flexible wall will be constructed in a top-down fashion while installing multiple P-T anchor rows, the apparent earth pressure diagram will be utilized to determine design loads. When calculating the total load for the apparent earth pressure diagram, the developed shear strengths are used to determine the lateral earth pressure coefficient.

H.4.2.1. The developed friction angle of the soil mass on the retained side must be calculated using a derivation of Equation 6.17. The factor of safety for stringent displacement control (FS = 1.5) was utilized when calculating the total load for the system as described in section 11.3.4 and section 11.3.7 of this EM.

$$\varphi'_d = \tan^{-1}\left(\frac{\tan\varphi'}{FS}\right) = \tan^{-1}\left(\frac{\tan 32^\circ}{1.5}\right) = 22.6^\circ$$

H.4.2.2. Using φ'_d, the developed active earth pressure coefficient (K_{ad}) used to determine the design pressures on the retained side of the wall can be calculated using an equivalent version of Equation 6.15. Note that for this example, the subscript "d" is for earth pressures calculated using developed shear strength. This is valid for the soil mass above the dredge line that is used for determining the total load:

$$K_{ad} = \tan^2\left(45^\circ - \frac{\varphi'_d}{2}\right) = 0.44$$

H.4.3. Earth Pressure Coefficients for Rotational Stability. Lateral earth pressure coefficients are calculated without a mobilized strength FS (non-mobilized shear strength) for rotational stability analysis. As stated in section 11.4 of this manual, both active pressures and passive pressures should be considered when performing the rotational stability analysis. For the soil below the dredge line, φ' is used to calculate the active (K_a) and passive (K_p) earth pressure coefficients:

$$K_a = \tan^2\left(45^\circ - \frac{\varphi'}{2}\right) = 0.31$$

$$K_p = \tan^2\left(45^\circ + \frac{\varphi'}{2}\right) = 3.25$$

H.5. Usual Case.

H.5.1. Earth Pressures. Figure H.3 shows the pressures acting on the retaining wall above the dredge line. This includes water pressures in the backfill and on the channel side, as well as active earth pressures from the retained material.

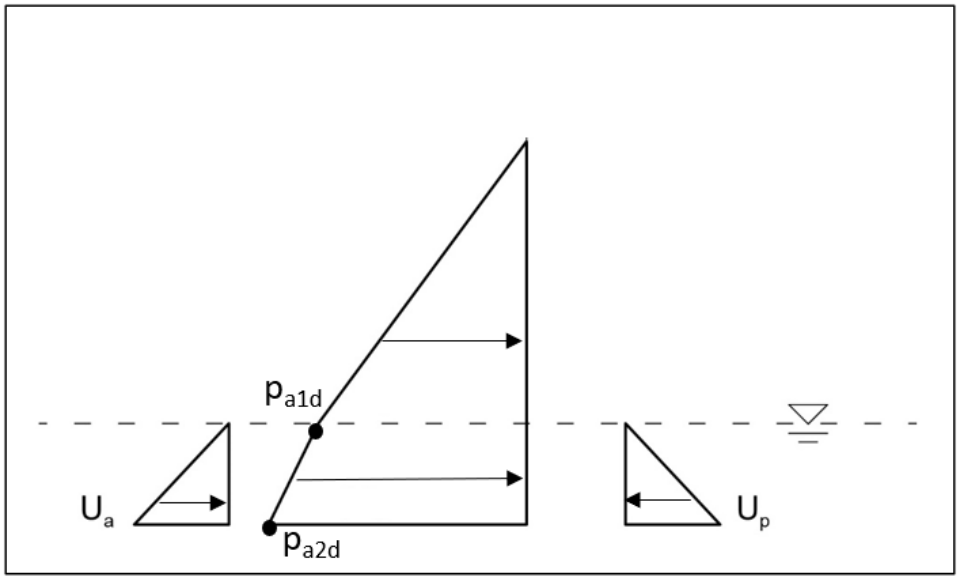

Figure H.3. Lateral Earth and Water Pressures Above Dredge Line

H.5.1.1. To find the mobilized active earth pressure acting on the retained side of the wall and above the groundwater, Equation 6.12 from the coefficient method discussed in section 6.7.6 is used. These are calculated using the earth pressure coefficients from developed shear strengths.

$$p_{a1d} = \gamma z K_{ad} = 120\ \frac{lb}{ft^3} \cdot 25\ ft \cdot 0.44 = 1{,}320\ \frac{lb}{ft^2}$$

H.5.1.2. Similarly, the active pressure below the water table can be found using the same equation and using the buoyant unit weight of soil below the water level. Here, h_w is equal to the height of water above the dredge line.

$$p_{a2d} = p_{a1d} + \gamma' h_w K_{ad} = 1{,}320\ \frac{lb}{ft^2} + (120\ \frac{lb}{ft^3} - 62.4\ \frac{lb}{ft^3}) \cdot 5\ ft \cdot 0.44 = 1{,}446.7\ \frac{lb}{ft^2}$$

H.5.2. Determine Total Load. The maximum ordinate of the apparent earth pressure diagram (p) behind a flexible wall can be calculated using the total load. The total load is determined using the developed active earth pressures (see section 11.3.7.3) and then distributed into an apparent earth pressure diagram as shown in Figure 11.2, which is represented in Figure H.4.

$$Total\ Load = 5\ ft \cdot \left(\frac{p_{a1d} + p_{a2d}}{2}\right) + \frac{1}{2} p_{a1d} \cdot (25\ ft) = 6{,}916.8 \frac{lb}{ft} + 16{,}500 \frac{lb}{ft}$$

$$= Total\ Load = 23{,}416.8\ \frac{lb}{ft}$$

$$p = \frac{Total\ Load}{H - \frac{H_1}{3} - \frac{H_{n+1}}{3}} = \frac{23{,}416.8 \frac{lb}{ft}}{30ft - \frac{6\ ft}{3} - \frac{8\ ft}{3}} = 924.3\ \frac{lb}{ft^2}$$

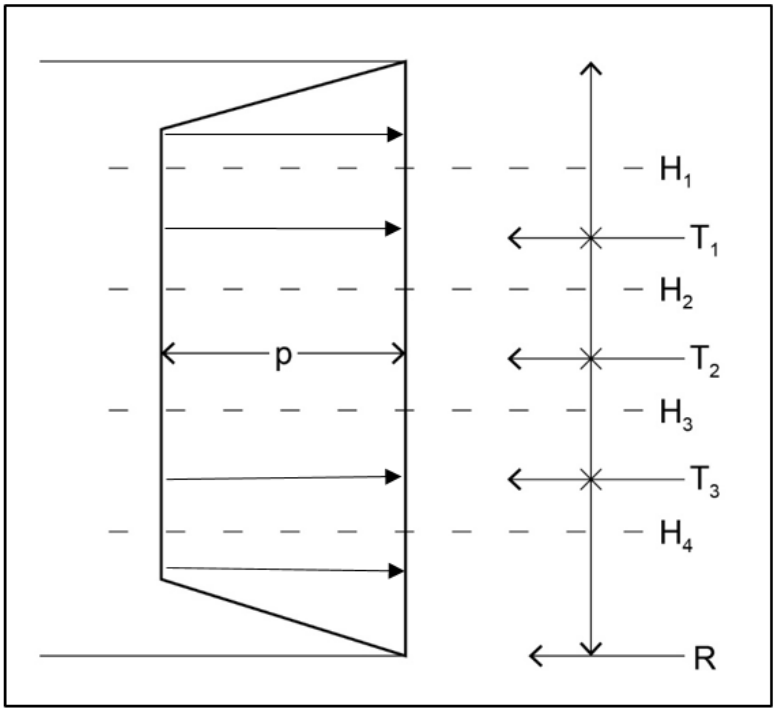

Figure H.4. Apparent Earth Pressure Diagram for Usual Load Case

H.5.3. Anchor Loads and Toe Resistance. From the maximum ordinate the resulting apparent earth pressure diagram is shown in Figure H.4. The resultant and individual anchor loads can be calculated using the tributary area method as shown in Figure 11.4.

$$T_1 = \left(\frac{2}{3} H_1 + \frac{1}{2} H_2\right) \cdot p = 7{,}394.4 \frac{lb}{ft}$$

$$T_2 = \left(\frac{1}{2} H_2 + \frac{1}{2} H_3\right) \cdot p = 7{,}394.4 \frac{lb}{ft}$$

$$T_3 = \left(\frac{1}{2} H_3 + \frac{23}{48} H_4\right) \cdot p = 7{,}240.4 \frac{lb}{ft}$$

$$R = \left(\frac{3}{16} H_4\right) \cdot p = 1{,}386.5 \frac{lb}{ft}$$

H.5.4. Rotational Stability. Adequate wall penetration into the soil and appropriate anchor position will prevent rotational failure. Figure H.5 shows the active and passive earth pressures acting on the wall below the dredge line, as well as the location of the resultant. Water pressures are omitted from the figure; however, they will be equal and opposite on the active and passive side of the wall.

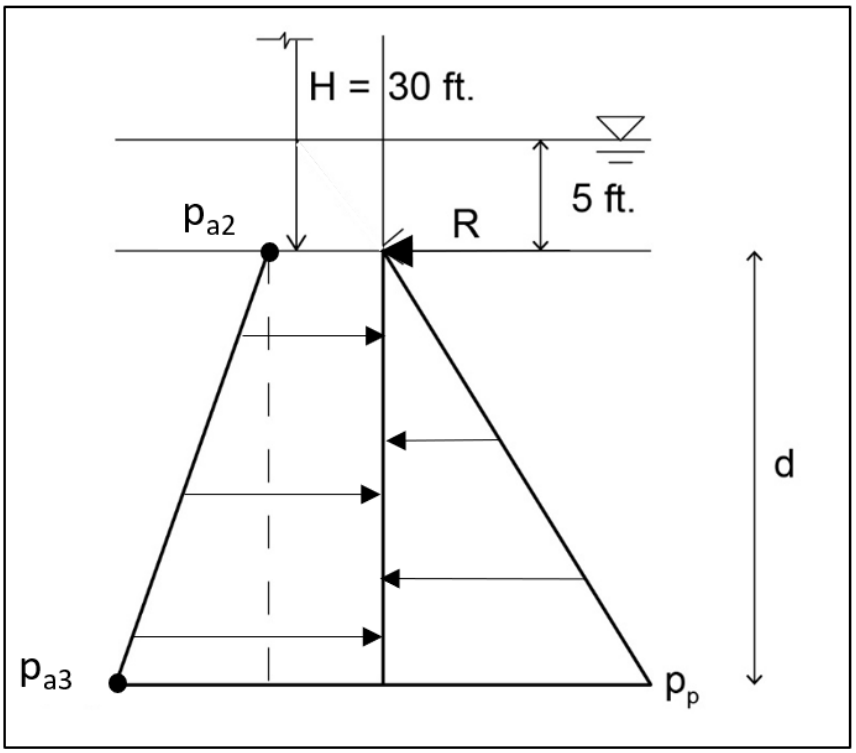

Figure H.5. Active and Passive Pressures Below Dredge Line

H.5.4.1. With inspection, the pressures at the tip are dependent on the embedment depth, *d*. Per section H.4.3, the active (K_a) and passive (K_p) earth pressure coefficients are calculated without a mobilized strength FS.

H.5.4.2. Equation 11.3 is used to determine the embedment depth. Because the hydraulic loading on both sides of the wall are equal in magnitude and acting in opposite directions, the water pressures will cancel and will be removed in calculations. Per Table 11.1, a minimum FS of 1.7 is required for the usual load case with an ordinary site classification.

$$P_p - P_a = R \cdot FS, \text{ with } FS = 1.7$$

$$P_p = \frac{1}{2}\gamma' K_p d^2 = \frac{1}{2}(120 - 62.4)\frac{lb}{ft^3} \cdot 3.25 \cdot d^2$$

$$P_p = 93.6\frac{lb}{ft^3}d^2$$

$$P_a = \frac{d}{2}(p_{a2} + p_{a3})$$

$$p_{a2} = [\gamma \cdot (H - h_w) + (\gamma - \gamma_w) \cdot h_w] \cdot K_a$$

$$p_{a2} = \left[120\frac{lb}{ft^3} * (30-5)ft + (120-62.4)\frac{lb}{ft^3} \cdot 5ft\right] \cdot 0.31 = 1{,}019.3\frac{lb}{ft^2}$$

$$p_{a3} = p_{a2} + \gamma' K_a d$$

$$p_{a3} = 1{,}019.3\frac{lb}{ft^2} + (120-62.4)\frac{lb}{ft^3} \cdot 0.31 \cdot d$$

$$P_a = \frac{d}{2}\left(1{,}019.3\frac{lb}{ft^2} + 1{,}019.3\frac{lb}{ft^2} + 17.86\frac{lb}{ft^3}d\right) = 1{,}019.3\frac{lb}{ft^2} \cdot d + 8.93\frac{lb}{ft^3}d^2$$

Substituting into Equation 11.3, the embedment depth is found:

$$93.6\frac{lb}{ft^3}d^2 - \left(1{,}019.3\frac{lb}{ft^2} \cdot d + 8.93\frac{lb}{ft^3}d^2\right) = 1{,}386.5 \cdot 1.7$$

$$84.67\frac{lb}{ft^3}d^2 - 1{,}019.3\frac{lb}{ft^2} \cdot d - 2{,}357.05 = 0$$

$$d = 14.02\,ft \cong 15ft\ for\ design$$

H.6. Unusual Drawdown Case.

H.6.1. In this case, the calculation for the total load, anchors, and rotational stability were completed simultaneously. The calculations of the total load in the system, and calculations for embedment depth of the sheet, depend on the lateral earth pressures in the backfill and at the toe. The lateral earth pressures depend on the effective stress, and the effective stresses depends on the seepage pressures. On the backfill side, the vertical flow downward will increase the effective stress compared to a no seepage condition. On the channel side, the effective stress will be reduced compared to a no seepage condition. These seepage pressures were accounted for in this example.

H.6.1.1. A system of equations were developed to calculate the total load and embedment depth calculation provided in Equation 11.3. Note that calculations for the total load and apparent earth pressure diagrams use active earth pressures based on developed shear strength (K_{ad}). Whereas the lateral earth pressures (K_a and K_p) for rotational stability are calculated without using mobilized strength FSs. The procedure in section 6.7.7 for calculating the effectived unit weight of water ($\gamma_{we_{a,p}}$) based on seepage was used for the calculation of water pressures.

$$\gamma_{we_{a,p}} = \begin{cases} \gamma_w(1-i), retained\ side\ (vertical\ flow\ downward) \\ \gamma_w(1+i), channel\ side\ \ (vertical\ flow\ upward) \end{cases}$$

H.6.1.2. The seepage gradients were used to calculate the effective unit weight of water so that the required depth of embedment and lateral earth pressures for the total load can be found simultaneously. The seepage gradients were dependent on the embedment depth of the sheet pile (d).

$$h_w = 2\ ft$$

$$H = 30\ ft$$

$$i = \frac{\Delta h}{\Delta l} = \frac{2\ ft}{2ft + 2d}$$

H.6.2. Earth Pressures. Through spreadsheet iteration, a sheet embedment depth of 17 feet below the dredge line (elevation 948) was determined using the series of equations presented in Table H.1. The calculations provided in this example consider this embedment depth. The total load for the apparent earth pressure diagram was determined considering active earth pressures that were calculated using developed shear strength for the retained soil. The earth pressures considered for the total load and accompanying water pressures are presented in Figure H.6.

Table H.1
Spreadsheet Calculations for Unusual Drawdown Total Load and Rotational Stability

GRADIENT CALCULATIONS				TOTAL LOAD			WATER PRESSURES			ACTIVE AND PASSIVE BELOW DREDGE				
d	i_v	γ_{wa}	γ_{wp}	p_{a1d}	p_{a2d}	TL	u_{a1}	u_{a2}	u_p	p_p	p_{a2}	p_{a3}	R	FS_p
ft	ft/ft	psf	psf	psf	psf	lb/ft	psf	psf	psf	psf	psf	psf	lb/ft	EQU 11-3
10	0.09	56.7	68.1	1478	1534	23710	113	681	681	1688	1081	1277	1517	n/a
11	0.08	57.2	67.6	1478	1534	23710	114	744	744	1873	1081	1295	1518	n/a
12	0.08	57.6	67.2	1478	1533	23709	115	806	806	2059	1080	1312	1519	n/a
13	0.07	57.9	66.9	1478	1533	23709	116	869	869	2245	1080	1330	1520	n/a
14	0.07	58.2	66.6	1478	1533	23709	116	932	932	2432	1080	1348	1520	n/a
15	0.06	58.5	66.3	1478	1533	23709	117	995	995	2618	1080	1366	1521	0.3
16	0.06	58.7	66.1	1478	1532	23708	117	1057	1057	2804	1080	1383	1521	1.2
16.3	0.06	58.8	66.0	1478	1532	23708	118	1076	1076	2860	1080	1389	1521	1.5
17	0.06	58.9	65.9	1478	1532	23708	118	1120	1120	2991	1079	1401	1522	2.2
18	0.05	59.1	65.7	1478	1532	23708	118	1182	1182	3177	1079	1419	1522	3.3

Page

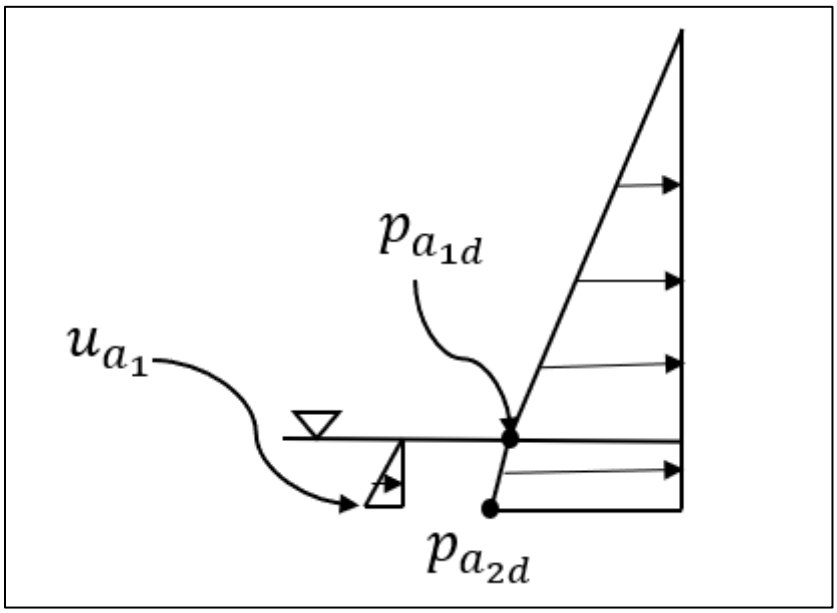

Figure H.6. Earth and Water Pressures in Retained Soil for the Unsual Drawdown

$$\gamma_{we_a} = \gamma_w \left(1 - \frac{2ft}{2ft+2d}\right) = 58.9 \ \frac{lb}{ft^3}$$

$$p_{a_{1d}} = (H - h_w)K_{ad}\gamma = 1{,}478.4 \frac{lb}{ft^2}$$

$$p_{a_{2d}} = p_{a_{1d}} + 2(\gamma - \gamma_{we_a})K_{ad} = 1{,}478.4 \frac{lb}{ft^2} + 2ft\left(120 \frac{lb}{ft^3} - 58.9 \frac{lb}{ft^3}\right)0.44 = 1{,}532.1 \ \frac{lb}{ft^2}$$

$$u_{a1} = \gamma_{we_a} \cdot h_w = 59.1 \frac{lb}{ft^3} \cdot 2ft = 117.9 \frac{lb}{ft^2}$$

H.6.3. Determine Total Load. The maximum ordinate of the apparent earth pressure diagram (p) behind a flexible wall can be calculated using the total load. The total load is determined using the developed active earth pressures (see section 11.3.7) and then distributed into an apparent earth pressure diagram, as shown in Figure 11.2, which is represented in Figure H.7.

$$Total\ Load = \ h_w \left(\frac{p_{a_{1d}} + p_{a_2 d}}{2}\right) + \frac{1}{2}(H - h_w) \cdot p_{a_{1d}} = 23{,}708.1 \frac{lb}{ft}$$

$$p = \frac{Total\ Load}{H - \frac{H_1}{3} - \frac{H_{n+1}}{3}} = 935.8 \ \frac{lb}{ft^2}$$

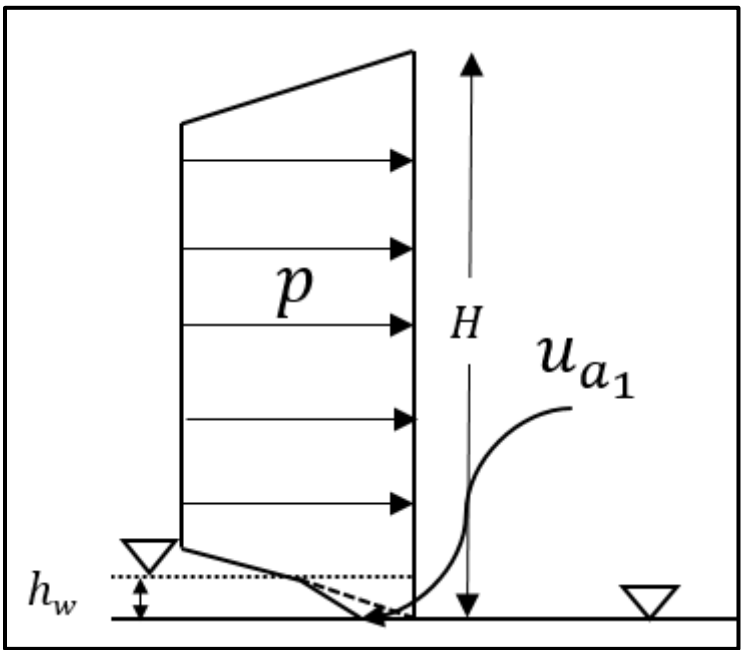

Figure H.7. Apparent Earth Pressure Diagram

H.6.4. Anchor Loads and Toe Resistance. To calculate the corresponding anchor loads (T_i) and resultant (R), the tributary area method is again utilized. Note that the unbalanced water pressures that were added to the diagram must be accounted for in the calculations. Thus, the calculation for R has a term for the water pressure in its tributary area.

$$T_1 = \left(\frac{2}{3}H_1 + \frac{1}{2}H_2\right) \cdot p = 7{,}486.4\,\frac{lb}{ft}$$

$$T_2 = \left(\frac{1}{2}H_2 + \frac{1}{2}H_3\right) \cdot p = 7{,}486.4\,\frac{lb}{ft}$$

$$T_3 = \left(\frac{1}{2}H_3 + \frac{23}{48}H_4\right) \cdot p = 7{,}330.4\,\frac{lb}{ft}$$

$$R = \left(\frac{3}{16}H_4\right) \cdot p + h_w \cdot \frac{u_{a1}}{2} = 1{,}521.6\,\frac{lb}{ft}$$

H.6.5. Rotational Stability.

H.6.5.1. For calculating the depth of embedment, the active and passive earth pressure coefficients are calculated without a mobilized strength FS. The effective stress within the zones of seepage were modified to account for seepage. Note that for steady-state seepage, the magnitude of the seepage pressures (u_p and u_{a2}) going around the tip of the sheet pile will equal each other. The pressures below the dredge line that are used for calculating the depth of embedment, as shown in Figure H.8, can then be calculated as:

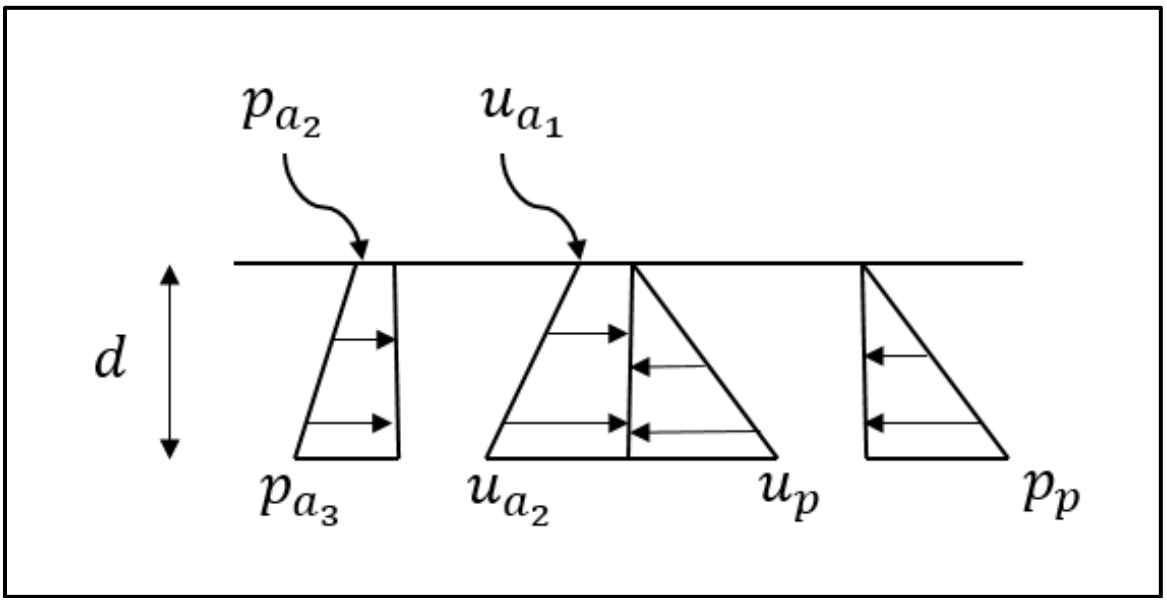

Figure H.8. Earth Pressures Below Dredge Line for Unusual Drawdown Case

$$\gamma_{we_p} = \gamma_w \left(1 + \frac{2ft}{2ft+2d}\right) = 65.9\ \frac{lb}{ft^3}$$

$$u_p = \gamma_{we_p} d = 65.9 \frac{lb}{ft^3} \cdot 17.0ft = 1{,}120.3\ \frac{lb}{ft^2}$$

$$p_p = (\gamma d - u_p)K_p = \left(120 \frac{lb}{ft^3} \cdot 17ft - 1{,}120.3 \frac{lb}{ft^2}\right) \cdot 3.25 = 2{,}989.0 \frac{lb}{ft^2}$$

$$P_p = \frac{d}{2} p_p = \frac{17ft}{2} \cdot 2{,}989.0 \frac{lb}{ft^2} = 25{,}406.5 \frac{lb}{ft}$$

$$p_{a_2} = (\gamma H - u_{a1})K_a = \left(120 \frac{lb}{ft^3} \cdot 30ft - 117.9 \frac{lb}{ft^2}\right) 0.31 = 1{,}079.5 \frac{lb}{ft^2}$$

$$u_{a2} = u_{a1} + d\gamma_{we_a} = 117.9 \frac{lb}{ft^2} + 17ft \cdot 58.9 \frac{lb}{ft^3} = 1{,}119.2 \frac{lb}{ft^2}$$

$$p_{a3} = [\gamma(H + d) - u_{a2}] \cdot K_a = \left[120 \frac{lb}{ft^3} (30ft + 17ft) - 1{,}119.2 \frac{lb}{ft^2}\right] 0.31 = 1{,}401.4 \frac{lb}{ft^2}$$

$$P_a = \frac{p_{a2} + p_{a3}}{2} d = \frac{1{,}079.5 \frac{lb}{ft^2} + 1{,}401.4 \frac{lb}{ft^2}}{2} \cdot 17ft = 21{,}087.7\ \frac{lb}{ft}$$

$$P_p = \frac{p_p \cdot d}{2} = \frac{2{,}989.0 \frac{lb}{ft^2} \cdot 17ft}{2} = 25{,}406.5 \frac{lb}{ft}$$

H.6.5.2. Equation 11.3 is used to determine the embedment depth. Note that water pressures are included in the calculations since they are unbalanced and will not cancel out. Per Table 11.1, a minimum FS of 1.5 is required for the unusual load case with an ordinary site classification.

$$\left(P_p + \frac{d \cdot u_p}{2}\right) - \left(P_a + \frac{u_{a1} + u_{a2}}{2} \cdot d\right) = R \cdot FS$$

$$FS = \frac{1}{1{,}521.6\frac{lb}{ft}}\left[\left(25{,}406.5\frac{lb}{ft} + 9{,}522.6\frac{lb}{ft}\right) - \left(21{,}087.7\ \frac{lb}{ft} + 10{,}515.4\frac{lb}{ft}\right)\right]$$

$$FS = 2.2 > 1.5 \therefore OK$$

Based on the iterations in Table H.1, the embedment depth is found to be 16.3 ft for an FS of 1.5 for rotational stability:

$$d \cong 17.0ft\ for\ design$$

H.7. Unusual Surcharge Case.

H.7.1. Earth Pressures. The design of the anchored retaining wall includes a 250 psf uniform surcharge load on the ground surface in the vicinity of the wall due to stockpiled material, machinery, occasional vehicle traffic, and other influences. Similar to the usual load case, the driving groundwater level is at elevation 970 feet and the resisting channel water level is at elevation 970 feet. For determining the lateral earth pressures due to the surcharge, the developed active earth pressure coefficient must be multiplied by the magnitude of the surcharge load and applied uniformly on the active side:

$$\Delta\sigma_h = K_{ad}q_s = p_s = 0.44 \cdot 250\ \frac{lb}{ft^2} = 110\frac{lb}{ft^2}$$

H.7.2. Determine Total Load.

H.7.2.1. Since the soil earth pressures (excluding surcharge loading) and water pressures for this load case are the same as the usual case, the total load will be the same as in section H.5.2.

$$Total\ Load = 23{,}416.8\ \frac{lb}{ft}$$

$$p_e = \frac{Total\ Load}{H - {}^{H_1}/_3 - {}^{H_4}/_3} = \frac{23{,}416.8\frac{lb}{ft}}{30ft - \frac{6\ ft}{3} - \frac{8\ ft}{3}} = 924.3\ \frac{lb}{ft^2}$$

H.7.2.2. As described in paragraph 11.3.8 of this EM, the additional lateral pressures due to the surcharge (p_s) will be added to the apparent earth pressure diagram represented in Figure H.4. This results in the design earth pressure diagram shown in Figure H.9. Note that the maximum ordinate of the apparent earth pressure diagram has a subscript "e" to differentiate earth pressure (p_e) from p_s.

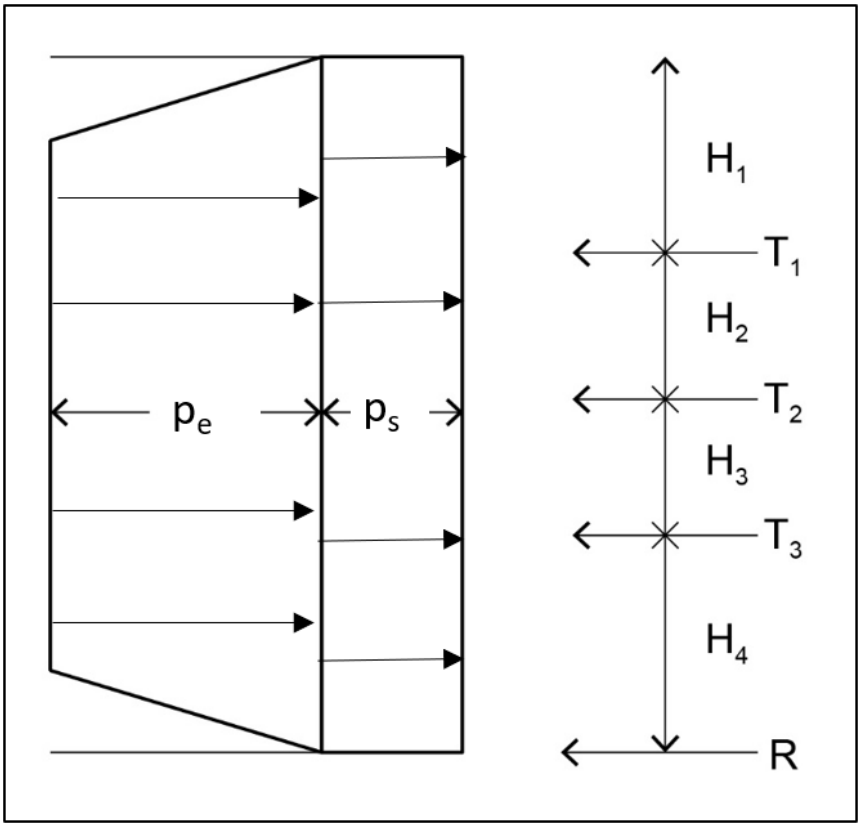

Figure H.9. Apparent Earth Pressure Diagram for Unusual Surcharge Load Case

H.7.3. Anchor Loads and Toe Resistance. To calculate the corresponding anchor loads (T_i) and resultant (R), the tributary area method is utilized:

$$T_1 = \left(\frac{2}{3}H_1 + \frac{1}{2}H_2\right) \cdot p_e + \left(H_1 + \frac{1}{2}H_2\right) \cdot p_s = 8{,}494.4\frac{lb}{ft}$$

$$T_2 = \left(\frac{1}{2}H_2 + \frac{1}{2}H_3\right) \cdot (p_e + p_s) = 8{,}274.4\frac{lb}{ft}$$

$$T_3 = \left(\frac{1}{2}H_3 + \frac{23}{48}H_4\right) \cdot p_e + \left(\frac{1}{2}H_3 + \frac{1}{2}H_4\right) * p_s = 8{,}120.4\frac{lb}{ft}$$

$$R = \left(\frac{3}{16}H_4\right) \cdot p_e + \left(\frac{1}{2}H_4\right) \cdot p_s = 1{,}826.5\frac{lb}{ft}$$

H.7.4. Rotational Stability. The procedure for rotational stability uses Equation 11.3. Similar to the conditions in the usual case, the water pressures are excluded in the calculations since they are equal and opposite. The surcharge pressures are added as a uniform pressure to the active pressures (p_{a2} and p_{a3}) that were calculated in section H.5.4. Active and passive pressures are calculated without a mobilized strength FS.

$$P_p - P_a = R \cdot FS, \text{ with } FS = 1.5$$

$$P_p = \frac{1}{2}\gamma' K_p d^2$$

$$P_p = 93.6\frac{lb}{ft^3}d^2$$

$$P_a = \frac{d}{2}(p_{a2} + p_{a3})$$

$$p_{a2} = [\gamma \cdot (H - h_w) + (\gamma - \gamma_w) \cdot h_w + q_s] \cdot K_a$$

$$p_{a2} = \left[120\frac{lb}{ft^3} \cdot (30-5)ft + (120-62.4)\frac{lb}{ft^3} \cdot 5ft + 250\frac{lb}{ft^2}\right] \cdot 0.31$$

$$p_{a2} = 1{,}096.78\frac{lb}{ft^2}$$

$$p_{a3} = p_{a2} + \gamma' K_a d$$

$$p_{a3} = 1{,}096.78\frac{lb}{ft^2} + (120-62.4)\frac{lb}{ft^3} \cdot 0.31 \cdot d$$

$$P_a = \frac{d}{2}\left(1{,}096.78\frac{lb}{ft^2} + 1{,}096.78\frac{lb}{ft^2} + 17.86\frac{lb}{ft^3}d\right) = 1{,}096.78\frac{lb}{ft^2} \cdot d + 8.93\frac{lb}{ft^3}d^2$$

Substituting into the preceding equations, the embedment depth is found:

$$93.6\frac{lb}{ft^3}d^2 - \left(1{,}096.78\frac{lb}{ft^2} \cdot d + 8.93\frac{lb}{ft^3}d^2\right) = 1{,}826.5 \cdot 1.5$$

$$84.67\frac{lb}{ft^3}d^2 - 1{,}096.78\frac{lb}{ft^2} \cdot d - 2{,}739.75 = 0$$

$$d = 15.1\,ft \cong 16ft\ for\ design$$

H.8. Summary of Anchor Loads, Toe Resistance, and Embedment Depths.

H.8.1. Table H.2 presents a summary of the anchor loads and toe resistance for each of the load cases that were evaluated for this example. These were used for calculating anchor bond lengths and design of the structural elements. A summary of the minimum embedment depths to satisfy rotation stability for each load case are provided in Table H.3.

H.8.2. Note that the embedment depths presented in Table H.3 are the minimum depths to satisfy rotational stability. The axial capacity of the wall element must also be verified, and embedment depth may need to be deepened to satisfy the design criteria. Refer to section H.13.

Table H.2
Summary of Anchor Loads and Resultants

Load Case	T_1 (lb/ft)	T_2 (lb/ft)	T_3 (lb/ft)	R (lb/ft)
Usual	7,394.4	7,394.4	7,240.4	1,386.5
Unusual Drawdown	7,486.4	7,486.4	7,330.4	1,521.6
Unusual Surcharge	8,484.4	8,274.4	8,120.4	1,826.5

Table H.3
Minimum Wall Embedment for Rotational Stability

Load Case	Shear Strength	Minimum Factor of Safety	Required Wall Embedment (feet)
Usual	Drained, S	1.7	15
Unusual Drawdown	Drained, S	1.5	17*
Unusual Surcharge	Drained, S	1.5	16

*controls rotational stability

H.9. Anchor Stability.

H.9.1. From Table 11.3, $LT_{ult} = 7\,\frac{kips}{ft}$ for medium dense sands and silts. Per Table 11.6, the soil anchor bond zone calculations considered a factor of safety of 2.0 for both usual and unusual load cases. Configuration of the anchor rows was completed considering the requirements provided in Figure 11.10. An anchor inclination (α) of 20 degrees below horizontal was selected so that the configuration of the top anchor row would have a minimum of 15 feet of cover over the midpoint of the bond zone. A horizontal spacing of 8 feet was selected. The anchor stability for each anchor row is controlled by the unusual surcharge load case (refer to Table H.2).

H.9.2. Anchor Stability Top Anchor Row. The anchor bond length required is determined as follows:

$$T_{anchor} = \frac{L_b \cdot LT_{ult}}{FS_b}$$

$$T_{1max} = 8{,}484.4 \frac{lb}{ft}$$

$$T = \frac{T_{1max}}{\cos \alpha} = 9{,}028.9 \frac{lb}{ft}$$

$$T_{anchor} = 9{,}028.9 \frac{lb}{ft} \cdot (8ft) = \frac{L_b \cdot (7 \frac{kips}{ft})}{2.0}$$

$$\therefore\ L_b = 20.6\ ft \cong 21\ ft\ for\ design\ (top\ anchor\ row)$$

H.9.3. Anchor Stability Middle Anchor Row. The anchor bond length required is determined as follows:

$$T_{anchor} = \frac{L_b \cdot LT_{ult}}{FS_b}$$

$$T_{2max} = 8{,}274.4 \frac{lb}{ft}$$

$$T = \frac{T_{2max}}{\cos \alpha} = 8{,}805.4 \frac{lb}{ft}$$

$$T_{anchor} = 8{,}805.4 \frac{lb}{ft} \cdot (8ft) = \frac{L_b \cdot (7 \frac{kips}{ft})}{2.0}$$

$$\therefore\ L_b = 20.1\ ft \cong 21\ ft\ for\ design\ (middle\ anchor\ row)$$

H.9.4. Anchor Stability Bottom Anchor Row. The anchor bond length required is determined as follows:

$$T_{anchor} = \frac{L_b \cdot LT_{ult}}{FS_b}$$

$$T_h = 8{,}120.4 \frac{lb}{ft}$$

$$T = \frac{T_h}{\cos \alpha} = 8{,}641.5 \frac{lb}{ft}$$

$$T_{anchor} = 8{,}641.5\frac{lb}{ft} \cdot (8ft) = \frac{L_b \cdot (7\frac{kips}{ft})}{2.0}$$

$$\therefore\ L_b = 19.8\ ft \cong 20\ ft\ for\ design\ (bottom\ anchor\ row)$$

H.9.5. Summary of Anchor Lengths and Bond Zone. Table H.4 provides a summary for the recommended anchor lengths and geometry for the wall system. Minimum unbonded lengths and bond zone boundaries were selected based on the parameters provided in Figure 11.10. The assumed failure surface was at 29 degrees (45–φ′/2) from vertical and the value "X" is 6 feet (0.2 x 30 ft = 6 ft). The wall system geometry is shown in Figure H.10.

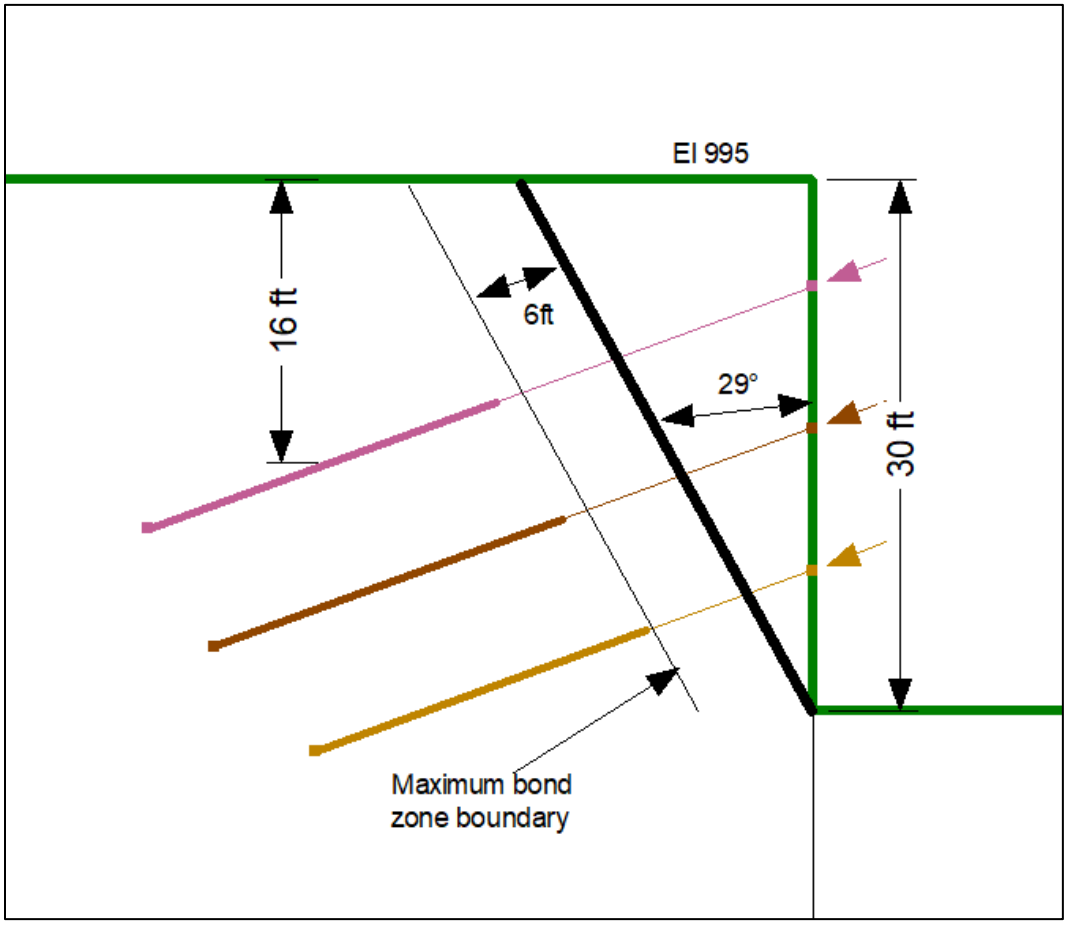

Figure H.10. General Configuration of Anchor Rows and Bond Zone

Table H.4
Anchor Lengths and Bond Zones

Anchor Elevation (ft)	Inclination (degrees)	Total Anchor Length (ft)	Length of Bond Zone (ft)	Unbonded Zone (ft)
989	20	40	21	19
981	20	36	21	15
973	20	30	20	10*

*Minimum allowed length of unbonded zone.

H.10. Global Stability.

H.10.1. The global stability performance mode was evaluated for the design load cases using drained strength (S) parameters. The computer program (SLOPE/W in GeoStudio 2019) was used to run the stability analyses for three load conditions: usual, unusual drawdown, and unusual surcharge.

H.10.2. Spencer's Method was used to determine the stability factors of safety. Slip surfaces going around the sheet pile tip were modeled by specifying tangent lines for the slip surface radius at elevation 948 and lower. Note that if evaluating slip surfaces through the embedded sheet pile, then the passive resistance of the sheet can be accounted for as described in section 9.2.4 of Strom and Ebeling (2001).

H.10.3. The reinforcement consists of three P-T anchor rows. The spacing of the anchors is 8 feet horizontally at each level. Based on the presumptive ultimate anchor load transfer values provided in Table 11.3, a value of 7 kips/ft was utilized. Anchor diameters were input so that the bond area/length of bond zone was equal to 1 square foot/foot of bond. Then an ultimate bond stress of 7,000 psf was input. A factor of safety of 2.0 was applied to the ultimate bond stress. Anchor elevations, lengths, and geometry were input, per Table H.4.

H.10.4. The anchor tendons have a 184 kip ultimate tensile capacity. A resistance factor of 0.53 (factor of safety of 1.89) was applied to the ultimate tendon load for the usual and unusual load cases.

H.10.5. The critical FS for each of the load cases are presented in Figures H.11, H.12, and H.13. The FS for the design load cases are presented in Table H.6. Each of the calculated minimum FS exceeded the load case criteria in section 11.5 of this manual. Example anchor parameters for the usual load case are listed in Table H.5.

Table H.5
Global Stability Analysis Input Parameters

Parameters Name	Top Anchor Row	Middle Anchor Row	Lower Anchor Row
Type	Anchor	Anchor	Anchor
Pullout Resistance	7,000 psf	7,000 psf	7,000 psf
Pullout Resistance Reduction Factor	2	2	2
Tensile Capacity	184,000 lbf	184,000 lbf	184,000 lbf
Tensile Capacity Reduction Factor	1.89	1.89	1.89
Shear Force	0 lbf	0 lbf	0 lbf
Shear Force Reduction Factor	1	1	1
Apply Shear	Parallel to Slip	Parallel to Slip	Parallel to Slip
F of S Dependent	No	No	No
Force Distribution	Distributed	Distributed	Distributed
Bond Length	21 ft	21 ft	20 ft
Bond Diameter	0.31830989 ft	0.31830989 ft	0.31830989 ft
Out-of-Plane Spacing	8 ft	8 ft	8 ft
Face Anchorage	Yes	Yes	Yes
Factored Pullout Resistance	437.5 lbf/ft/ft	437.5 lbf/ft/ft	437.5 lbf/ft/ft
Shear Force Applied	0 lbf	0 lbf	0 lbf
Factored Tensile Capacity	12,169.3 lbf/ft	12,169.3 lbf/ft	12,169.3 lbf/ft
Lock to Ground Surface	No	No	No
Outside Point	(102, 989) ft	(102, 981) ft	(102, 973) ft
Inside Point	(64.41, 975.32) ft	(68.17, 968.69) ft	(73.81, 962.74) ft
Length	40.0 ft	36.0 ft	30.0 ft
Orientation	-160 °	-160 °	-160 °
Max. Pullout Force	9,187.5 lbf	9,187.5 lbf	8,750 lbf
Bond Length	21 ft	21 ft	20 ft

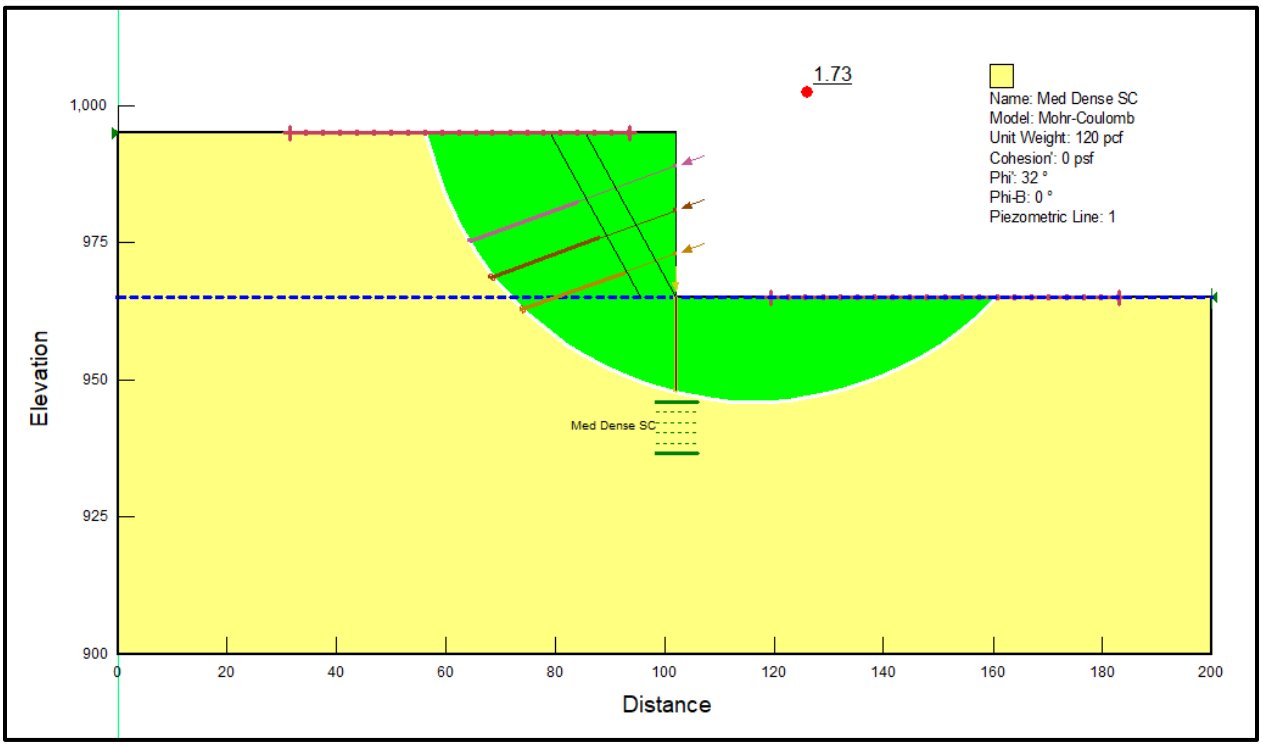

Figure H.11. Usual Case, Idealized Cross Section for Design

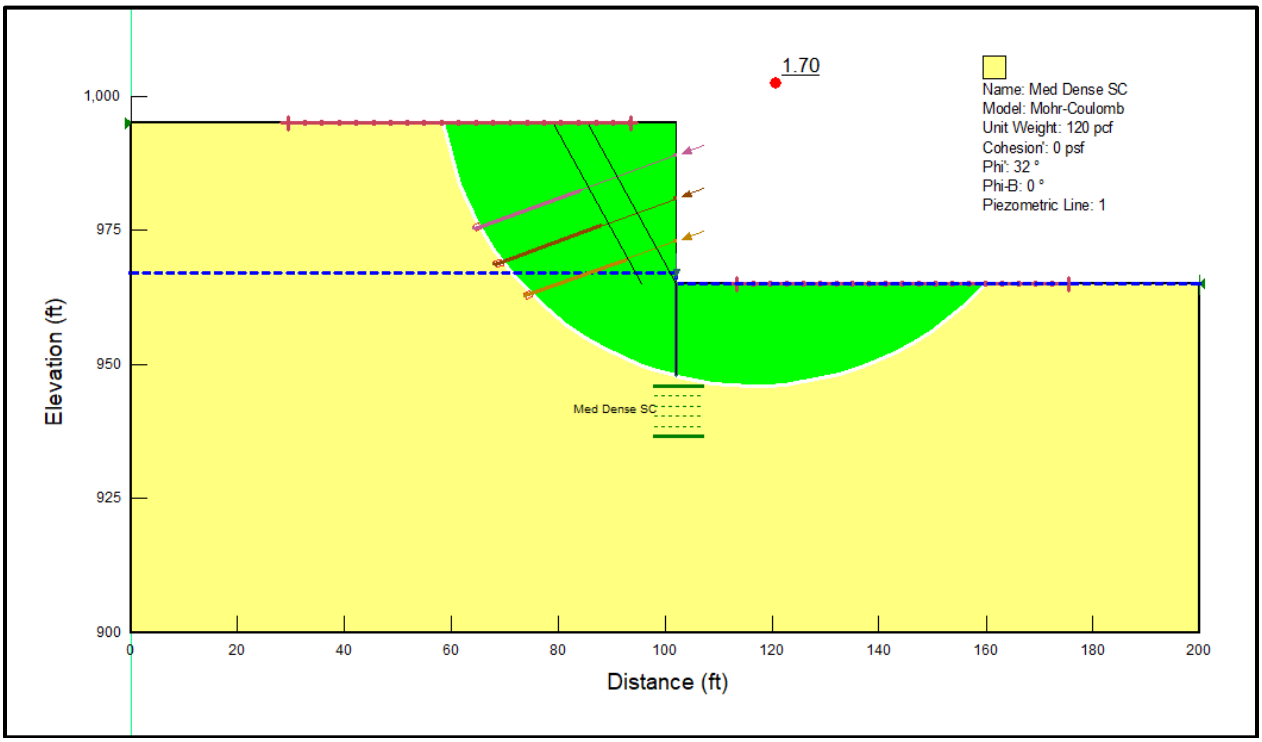

Figure H.12. Unusual Drawdown Case, Idealized Cross Section for Design

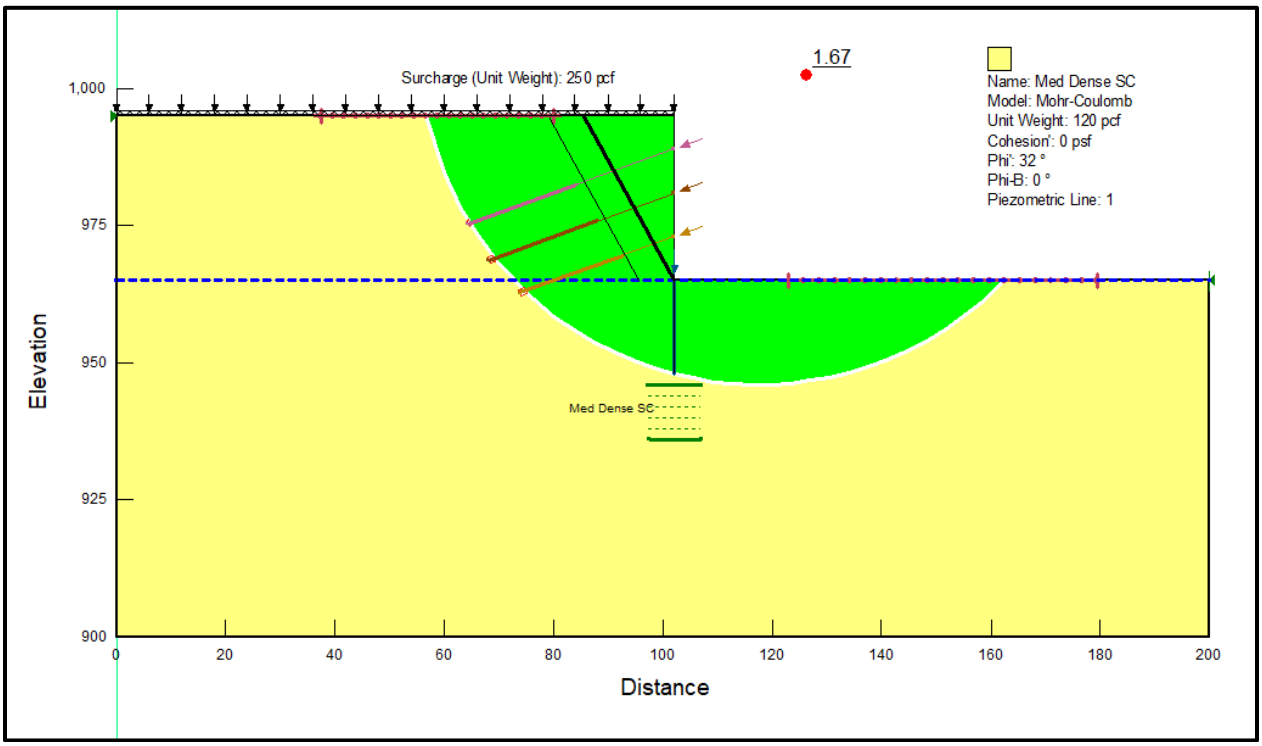

Figure H.13. Unusual Surcharge Case, Idealized Cross Section for Design

Table H.6
Summary of Global Stability Factors of Safety

Load Case	Calculated FS	Required Minimum FS (Table 11.2)
Usual	1.73	1.6
Unusual Drawdown	1.70	1.5
Unusual Surcharge	1.67	1.5

H.11. Internal Erosion. The factor of safety against internal erosion is calculated using Equation 7.9 of this EM. The computation for factor of safety for seepage is based on the vertical gradient and defined as:

$$FS_{vg} = \frac{i_{cr}}{i_e}$$

Where:

FS_{vg} = factor of safety based on vertical gradient

i_{cr} = critical vertical gradient = γ'/γ_w

i_e = vertical exit gradient

γ' = average effective (or buoyant) unit weight of soil

γ_w = unit weight of water

Using:

$$i_e = i = \frac{\Delta h}{\Delta l} = \frac{2\ ft}{2ft + 2d} = \frac{2\ ft}{2ft + 2 * 17ft}$$

$$i_e = 0.056$$

$$i_{cr} = \frac{\gamma'}{\gamma_w} = \frac{120 - 62.4}{62.4} = 0.92$$

$$FS_{vg} = \frac{0.92}{0.056} \cong 17$$

The factor of safety for internal erosion is shown to exceed the factors of safety required by Table 7.3 of this EM.

H.12. Settlement. Construction of the wall system will require excavation on the channel side of the wall. No additional loading will be added to the retained soil side; therefore, settlement is not expected to impact the wall. Additionally, since the soil is granular, rebound is expected to be negligible.

H.13. Axial Capacity of Wall Element. Vertical capacity of the wall element must be checked to finalize the design. The embedded portion (below dredge line) must provide adequate resistance to the downward vertical loads in the system. The downward loads in this wall system include: vertical component of the anchor loads, sheet piling, wales, and concrete facing. The resistance to the vertical system loading comes from the skin friction and the end bearing of the wall element. The general approach to this analysis is described in the following paragraphs, however, the calculations are omitted from this design example.

H.13.1. Water Levels. For cohesionless soils, the ultimate skin friction and ultimate tip resistance will depend on the effective stresses. Note that water levels controlling the design for the lateral loads (typically lower water levels) may not be the same as for water levels that will control calculation for skin and tip resistance (typically higher water levels). For instance, higher water levels on the channel and retained side would result in lower effective stresses in the embedded portion of the sheet, which would then result in reduced ultimate capacity.

H.13.2. Ultimate Skin Friction. The area of the wall below the dredge line provides resistance to vertical loads in a permanent P-T anchor wall. Any portion of skin resistance above the dredge line on the retained side is neglected when designing permanent structures. EM 1110-2-2906 provides methods for calculating the ultimate skin friction using effective stress. When calculating the ultimate skin friction on the retained side, the average effective stress from a depth of "H" (at dredge line) to the tip of the wall element (H+d) is used. When

calculating the ultimate skin friction on the dredged side, the average effective stress from the dredge line to the pile tip (d) is used.

H.13.3. The surface area for the unit skin friction is generally taken to be a box area (or perimeter) around a section. Since this is a continuous wall, this would mean that the ultimate skin friction would be calculated for 1 ft^2/ft^2 of wall face on each side of the embedded portion of the wall, instead of accounting for additional pile area due to the height of the Z section.

H.13.4. Tip resistance for a sheet pile is typically neglected since the steel cross section is relatively small. Additionally, it is not certain that the section will "plug," therefore the box section is not used.

H.14. Strength of Structural Elements.

H.14.1. The three anchor loads and the resultant load on the base of the sheet pile from Figure H.4 were calculated for the usual, unusual drawdown, and unusual surcharge.

H.14.2. Load Factors. The load factors for design come from Chapter 9, paragraph 9.7.4.1.

$$Load\ Factor_{usual\ load} = 1.8$$

$$Load\ Factor_{unusual\ load} = 1.4$$

H.14.3. Steel Sheet Pile Design.

H.14.3.1. Sheet pile design is contingent on the selected sheet pile type. For this example, sheet pile PZ 22, and its associated material properties were selected.

$F_{y\ sheet\ pile} = 50\ ksi$, yield strength of sheet pile

$S_{sheet\ pile} = 18.1\ in^3$, section modulus of sheet pile

$E_{sheet\ pile} = 29{,}000\ ksi$, modulus of elasticity of sheet pile

$I_{sheet\ pile} = 84.38\ in^4$, moment of inertia of sheet pile

$A_{sheet\ pile} = 6.47\ in^2$, area of sheet pile

$W_{sheet\ pile} = 22\ in$, width of one sheet of sheet pile

$t_{fl\ sheet\ pile} = 0.375\ in$, flange thickness of sheet pile

$t_{web\ sheet\ pile} = 0.375\ in$, web thickness of sheet pile

$h_{sh\ sheet\ pile} = 9\ in$, height of sheet pile section

$$w_{fl\ sheet\ pile} = 6\ in, \text{ flange width of sheet pile}$$

H.14.3.2. Check Bending.

H.14.3.2.1. Usual case, wall bending moment at free end per section 11.3.6 and soil pressure from paragraph H.5.2:

$$M_{B\ free\ u} = \left(\frac{13}{54} H_1^2 * p_u\right) * Load\ Factor$$

$$= \frac{13}{54}(6\ ft)^2 * (924.3\ psf) * (1.8) = 14.42\ kip \cdot ft/ft$$

H.14.3.2.2. Unusual Drawdown case, wall bending moment at free end per section 11.3.6 and soil pressure from paragraph H.6.3:

$$M_{B\ free\ ud} = \left(\frac{13}{54} H_1^2 * p_d\right) * Load\ Factor$$

$$= \frac{13}{54}(6\ ft)^2 * (935.8\ psf) * (1.4) = 11.35\ kip \cdot ft/ft$$

H.14.3.2.3. Unusual Surcharge case, wall bending moment at free end per section 11.3.6 and soil pressures from sections H.7.1 and H.7.2:

$$M_{B\ free\ us} = \left(\frac{13}{54} H_1^2 * p_u + \frac{1}{2} p_s * H_1^2\right) * Load\ Factor$$

$$= \left(\frac{13}{54}(6\ ft)^2 * (924.3\ psf) + \frac{1}{2}(110\ psf) * (6\ ft)^2\right) * (1.4) = 13.99\ kip \cdot ft/ft$$

H.14.3.2.4. Compare the maximum free end bending moment against the design flexural strength of the sheet pile according to ANSI/AISC 360-16 (AISC).

Moment design reduction factor, AISC section F1:

$$\phi_b = 0.90$$

Yield Stress, AISC Chapter F (Equation F12-2):

$$F_b = F_{y\ sheet\ pile} = 50\ ksi$$

Nominal Flexural Strength, AISC Chapter F (Equation 12.1):

$$M_n = S_{sheet\ pile} * F_b$$

$$= 18.1\ in^3 * 50\ ksi = 75.4\ kip \cdot ft$$

Design Flexural Strength per foot, AISC Chapter F:

$$\phi M_n = \phi_b * M_n$$

$$= 0.90 * 75.4\ kip \cdot ft\ (per\ foot\ of\ wall) = 67.9\ kip \cdot ft/ft$$

Design is adequate if the design flexural strength is greater than the maximum bending moment.

$$\phi M_n \geq M_{B\ Max}$$

$$67.9\ kip \cdot ft/ft\ \geq 13.99\ kip \cdot ft/ft$$

$$\therefore Sheet\ pile\ is\ adequate\ for\ flexure$$

H.14.3.3. Check Shear.

H.14.3.3.1. The maximum required shear can be found from the largest factored anchor tensile load in Table H.7.

$$V_{Max} = 14{,}164.12\,\frac{lb}{ft}$$

H.14.3.3.2. Sheet pile is a singularly symmetric shape, therefore, AISC Chapter G, section G4 applies.

Area of sheet pile resisting the shear force per section 9.7.4:

$$A_{v\ sheet\ pile} = \frac{t_{web\ sheet\ pile} * h_{sh\ sheet\ pile}}{W_{sheet\ pile}} = \frac{(0.375\ in) * (9\ in)}{\left(\frac{22\ in}{12\ \frac{in}{ft}}\right)} = 1.84\ in^2/ft$$

Determine the web buckling strength coefficient, AISC Chapter G4:

$k_{v\ sheet\ pile} = 5$ Shear Buckling Coefficient, AISC section G4

$$\frac{h_{sh\ sheet\ pile}}{t_{web\ sheet\ pile}} \leq 1.10\sqrt{k_{v\ sheet\ pile} * \frac{E_{sheet\ pile}}{F_{y\ sheet\ pile}}}$$

$$\frac{9\ in}{0.375\ in} \leq 1.10\sqrt{5 * \frac{29{,}000\ ksi}{50\ ksi}}$$

$$24 \leq 53.85$$

$$\therefore C_{v2} = 1.0$$

Nominal shear strength per foot, AISC Chapter G (Equation G4.1):

$$V_n = 0.6 * F_{y\ sheet\ pile} * A_{web\ sheet\ pile} * C_{v2}$$

$$= 0.6 * (50\ ksi) * \left(\frac{1.84\ in^2}{ft}\right) = 55.2\ kip/ft$$

H.14.3.3.3. Compare the maximum shear load applied to the sheet pile from the anchors in Table H.7 against the design shear strength of the sheet pile.

Shear design reduction factor, AISC section G1:

$$\phi_v = 0.90$$

Design shear strength, AISC section G1:

$$\phi V_n = \phi_v * V_n$$

$$= 0.90 * 55.2\ kip/ft = 49.7\ kip/ft$$

H.14.3.3.4. Design is adequate if the design shear strength is greater than the maximum required shear.

$$\phi V_n \geq V_{Max}$$

$$49.7 kip/ft\ \geq 14.16\ kip/ft$$

$$\therefore Sheet\ pile\ is\ adequate\ for\ shear$$

H.14.4. Anchor Component Design. The configuration of the wales, anchor plate, and anchor tendon are illustrated in Figure H.14. Design of the wales and anchor plate is performed according to ANSI/AISC 360-16. The anchor tendons are designed according to section 11.10.3.

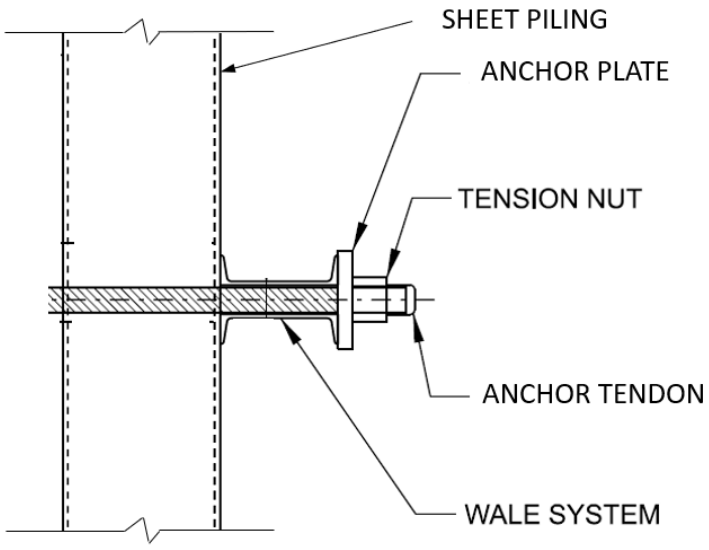

Figure H.14. Anchor Connections

H.14.5. Anchor Tendon Design.

H.14.5.1. Anchor tendon design is contingent on the selected anchor type. For this example, a 150 ksi ASTM A722 rod was selected.

$F_{y\,ten} = 120\ ksi$, yield strength of anchor tendon

$F_{uta\,ten} = 150\ ksi$, ultimate strength of anchor tendon

$S_{ha} = 8\ ft$, horizontal spacing of anchor tendon

$D_{ten} = 1.25\ in$, diameter of anchor tendon

$A_{ten} = 1.25\ in^2$, cross-sectional area of anchor tendon

H.14.5.2. Anchor tendons are designed using allowable stress method per section 11.10.3.

$\phi_u = 0.53$ allowable stresses, usual – section 11.10.3.

$\phi_{un} = 0.53$ allowable stresses, unusual – section 11.10.3.

H.14.5.3. Check Tension.

H.14.5.3.1. The maximum required tension on an anchor tendon can be found from the largest unfactored anchor tensile load in Table H.2 multiplied by the anchor spacing.

$$T_{Max.usual} = 7{,}394.4\frac{lb}{ft} * \ Anchor\ Spacing = 7{,}394.4\frac{lb}{ft} * (8\text{ft}) = 59.155 \text{ kip}$$

$$T_{Max.unusual} = 8{,}484.4\frac{lb}{ft} * \ Anchor\ Spacing = 8{,}484.4\frac{lb}{ft} * (8\text{ft}) = 67.875 \text{ kip}$$

H.14.5.3.2. Determine the maximum allowable stresses for anchorage tendons between the usual and unusual cases:

$$F_{nt} = F_{uta} * \phi$$

$$F_{nt.u} = (150\ ksi) * (0.53) = 79.5\ ksi \qquad \text{usual allowable stress}$$

$$F_{nt.un} = (150\ ksi) * (0.53) = 79.5\ ksi \qquad \text{unusual allowable stress}$$

H.14.5.3.3. Usual Design Tensile Strength:

$$R_{nt.u} = F_{nt.u} * A_{ten} \ = (79.5\ ksi) * (1.25\ in^2) = 99.375\ kip$$

H.14.5.3.4. Unusual Design Tensile Strength:

$$R_{nt.un} = F_{nt.un} * A_{ten} \ = (79.5\ ksi) * (1.25\ in^2) = 99.375\ kip$$

H.14.5.3.5. Compare the maximum tensile load in the anchors from Table H.2 against the minimum design tensile strength of the anchors:

$$R_{nt} \geq T_{Max}$$

$$99.375\ kip \geq 67.875 \text{ kip}$$

$$\therefore Anchor\ tendon\ is\ adequate\ for\ tension$$

H.14.6. Design of Wales.

H.14.6.1. The factored anchor tensile loads found in Table H.7 were calculated using the load factors from paragraph H.14.2, the angle of anchors from the horizontal, and the anchor loads in Table H.2.

$$Factored\ Anchor\ Tensile\ Load = \frac{Load\ Factor}{\cos(\alpha)} * Anchor\ Load$$

$\alpha = 20°$, angle of anchors from horizontal

Table H.7
Factored Anchor Tensile Loads and Resultant Loads

Load Category	T_{1u} (lb/ft)	T_{2u} (lb/ft)	T_{3u} (lb/ft)	R (lb/ft)
Usual	14,164	14,164	13,869	1,386.5
Unusual Drainage	11,153	11,153	10,921	1,521.6
Unusual Surcharge	12,640	12,327	12,098	1,826.5

H.14.6.2. The maximum required tension on an anchor can be found from the largest factored anchor tensile load in Table H.7 multiplied by the anchor spacing.

$$T_{Max.usual.f} = 14{,}164\frac{lb}{ft} * \ Anchor\ Spacing = 14{,}164\frac{lb}{ft} * (8\text{ft}) = 113.3\text{ kip}$$

$$T_{Max.unusual.f} = 12{,}640\frac{lb}{ft} * \ Anchor\ Spacing = 12{,}640\frac{lb}{ft} * (8\text{ft}) = 101.1\text{ kip}$$

H.14.6.3. Wale design is contingent on the selected wale type. For this example, two MC8x20 channels, and its associated material properties were selected.

$F_{y\,wale} = 50\ ksi$, yield strength of wale

$S_{x1} = 13.6\ in^3$, elastic section modulus of wale

$S_x = 2 * S_{x1} = 27.2\ in^3$, combined elastic section modulus of wale

$E_{wale} = 29{,}000\ ksi$, modulus of elasticity of wale

$r_{y\,wale} = 0.867\ in$, radius of gyration about Y-axis for wale

$B_{f\,wale} = 3.03\ in$, flange width of wale

$T_{f\,wale} = 0.50\ in$, flange thickness of wale

$h_{wale} = 8\ in$, depth of wale

$T_{w\,wale} = 0.40\ in$, web thickness of wale

$A_{web\,wale} = T_{w\,wale} * h_{wale} = (0.40\ in) * (8\ in) = 3.2\ in^2$, area of wale web

$Z_{x1} = 16.4\ in^3$, plastic section modulus of wale about weak axis

$Z_x = 2 * Z_{x1} = 32.8\ in^3$, combined plastic section modulus of wale

H.14.6.4. For the double channel, design according to AISC section F2 – channels bent about their major axis.

H.14.6.4.1. Check Flexure – Yield Bending.

- Determine the maximum bending moment in the wale, assuming maximum concentrated anchor load at center of wale:

$$M_{max} = \frac{T_{max} * Anchor\ Spacing}{8} = \frac{(113.3\ \text{kip}) * (8\ ft)}{8} = 113.3\ kip \cdot ft$$

- Determine nominal flexural strength, AISC section F2 (Equation F2-1):

$$M_n = F_{y\ wale} * Z_x = 136.7\ kip \cdot ft$$

- Determine design nominal flexural strength, AISC section F1:

$\phi_b = 0.90$ moment design resistance factor (LRFD)

$$\phi M_n = \phi_b * M_n = 0.90 * (136.7\ kip \cdot ft) = 123.0\ kip \cdot ft$$

- Compare the maximum bending moment in the wale against the design nominal flexural strength of the wale.

$$\phi M_n \geq M_{max}$$

$$123.0\ kip \cdot ft \geq 113.3\ kip \cdot ft$$

$$\therefore Wale\ is\ adequate\ for\ bending$$

H.14.6.4.2. Check Flexure – Lateral Torsional Buckling.

- Length between the braced points, assumed width taken from the edges of the sheet pile flanges:

$$L_b = 2 * \left(W_{Sheet\ Pile} - w_{fl\ sheet\ pile}\right) = 2 * (22\ in - 6\ in) = 32\ in$$

- Limiting laterally unbraced length, AISC (Equation F2.5):

$$L_p = 2 * r_{y\ wale} * \sqrt{\frac{E_{wale}}{F_{y\ wale}}} = 2 * (0.867\ in) * \sqrt{\frac{29{,}000\ ksi}{50\ ksi}} = 41.8\ in$$

- Compare the length between braced points and the limiting laterally unbraced length. Since, $L_b \leq L_p$ then lateral torsional buckling does not apply.

H.14.6.4.3. Check Shear.

- The maximum shear load applied to one wale from the anchors is one half of the maximum tension from the anchor:

$$V_{\max wale} = \frac{T_{max}}{2} = \frac{113.3\ kip}{2} = 56.657\ kip$$

- For the double channel, design according to AISC section G2 – I-shaped members and channels.

Width of wale resisting the shear force, AISC section G2.1a:

$$h_{v\,wale} = h_{wale} - 2 * T_{f\,wale} = 8\ in - 2 * (0.50\ in) = 7.0\ in$$

$$A_{web\,wale} = h_{v\,wale} * T_{w\,wale} = (7.0\ in) * (0.40\ in) = 2.8\ in^2$$

- Determine the web shear strength coefficient, AISC Chapter G, section G2.1.b:

$k_{v\,wale} = 5.34$ shear buckling coefficient, AISC section G2.1.b.2.i

$$\frac{h_{v\,wale}}{T_{w\,wale}} \leq 1.10\sqrt{k_{v\,wale} * \frac{E_{wale}}{F_{y\,wale}}}$$

$$\frac{7.0\ in}{0.40\ in} \leq 1.10\sqrt{5.34 * \frac{29{,}000\ ksi}{50\ ksi}}$$

$$17.5 \leq 61.22$$

$$\therefore C_{v1} = 1.0$$

- Determine nominal shear strength, AISC (Equation G2.1):

$$V_n = 0.6 * F_{y\,wale} * A_{web\,wale} * C_{v1}$$

$$= 0.6 * (50\ ksi) * (3.2\ in^2) * (1.0) = 96.0\ kip$$

- Determine design nominal shear strength, AISC section G1:

$\phi_v = 0.90$ shear design resistance factor (LRFD)

$$\phi V_n = \phi_v * V_n = 0.90 * (96.0\ kip) = 86.4\ kip$$

- Compare the maximum bending moment in the wale against the design nominal flexural strength of the wale:

$$\phi V_n \geq V_{Max\ wale}$$

$$86.4\ kip \geq 56.657\ kip$$

$$\therefore Wale\ is\ adequate\ for\ shear$$

H.14.7. Design of Anchor Plates.

H.14.7.1. Anchor plate design is contingent on the selected type, and its associated material properties:

$F_{y\ AP} = 50\ ksi$, yield strength

$T_{AP} = 2\ in$, plate thickness

$B_{AP} = 12.5\ in$, total plate height

$G_{AP} = 5\ in$, Gap between wales – unsupported length

H.14.7.1.1. Determine Effective Plate Height:

$$B_{eff\ AP} = B_{AP} - (D_{ten} + \frac{1}{8}\ in) = 12.5\ in - (2.25\ in + 0.125\ in) = 10.125\ in$$

H.14.7.1.2. Determine Plastic Section Modulus:

$$Z_{x\ AP} = \frac{B_{eff\ AP} * (T_{AP})^2}{4} = \frac{(10.125\ in) * (2\ in)^2}{4} = 10.125\ in^3$$

H.14.7.2. Check Flexure – Yield Bending.

H.14.7.2.1. Determine the maximum bending moment in the anchor plate, assuming maximum concentrated anchor load at center:

$$M_{max} = \frac{T_{max} * G_{AP}}{8} = \frac{(113.3\ \text{kip}) * (5\ in)}{8} = 5.902\ kip \cdot ft$$

H.14.7.2.2. Determine nominal flexural strength, AISC section F2 (Equation F2.1):

$$M_{n\ AP} = F_{y\ AP} * Z_{x\ AP} = (50\ ksi) * (10.125\ in^3) = 42.2\ kip \cdot ft$$

H.14.7.2.3. Determine design nominal flexural strength, AISC section F1:

$\phi_b = 0.90$ moment design resistance factor (LRFD)

$$\phi M_n = \phi_b * M_{n\,AP} = 0.90 * (42.2\ kip \cdot ft) = 38.0\ kip \cdot ft$$

H.14.7.2.4. Compare the maximum bending moment in the anchor plate against the design nominal flexural strength of the anchor plate:

$$\phi M_n \geq M_{max}$$

$$38.0\ kip \cdot ft \geq 5.902\ kip \cdot ft$$

$$\therefore Anchor\ plate\ is\ adequate\ for\ bending$$

H.14.7.3. Check Shear Yielding.

H.14.7.3.1. Determine the maximum shear in the anchor plate, assuming maximum concentrated anchor load at center of unsupported length:

$$V_{\max AP} = T_{max} = 113.3 \text{ kip}$$

H.14.7.3.2. Determine gross area subject to shear, AISC section J4.2:

$$A_{gv} = T_{ARP} * B_{AP} = (2\ in) * (12.5\ in) = 25\ in^2$$

H.14.7.3.3. Determine nominal shear yielding, AISC section J4.2 (Equation J4-3):

$$R_{n\,sy\,AP} = 0.60 * F_{y\,AP} * A_{gv} = 0.60 * (50\ ksi) * (25\ in^2) = 750\ kip$$

H.14.7.3.4. Determine design nominal shear yielding, AISC section J4.2:

$\phi_{sy} = 1.0$ shear yielding resistance factor (LRFD)

$$\phi R_{n\,sy\,AP} = \phi_{sy} * R_{n\,sy\,AP} = 1.0 * (750\ kip) = 750\ kip$$

H.14.7.3.5. Compare the maximum shear in the anchor plate against the design nominal shear yielding of the anchor plate:

$$\phi R_n \geq V_{\max AP}$$

$$750\ kip \geq 113.3\ kip$$

$$\therefore Anchor\ plate\ is\ adequate\ for\ shear\ yielding$$

H.14.7.4. Check Shear Rupture.

H.14.7.4.1. Determine the maximum shear in the anchor plate, assuming maximum concentrated anchor load at center of unsupported length:

$$V_{\max AP} = T_{max} = 113.3 \text{ kip}$$

H.14.7.4.2. Determine net area subject to shear, AISC section J4.2:

$$A_{nv} = T_{AP} * B_{eff\ AP} = (2\ in) * (10.125\ in) = 20.25\ in^2$$

H.14.7.4.3. Determine nominal shear rupture, AISC section J4.2 (Equation J4.4):

$$R_{n\ r\ AP} = 0.60 * F_{y\ AP} * A_{nv} = 0.60 * (50\ ksi) * (20.25\ in^2) = 607.5\ kip$$

H.14.7.4.4. Determine design nominal shear rupture, AISC section J4.2:

$\phi_r = 0.75$ shear rupture resistance factor (LRFD)

$$\phi R_{n\ r\ AP} = \phi_r * R_{n\ r\ AP} = 0.75 * (607.5\ kip) = 455.6\ kip$$

H.14.7.4.5. Compare the maximum shear in the anchor plate against the design nominal shear rupture of the anchor plate:

$$\phi R_n \geq V_{\max AP}$$

$$455.6\ kip \geq 113.3\ kip$$

$$\therefore\ Anchor\ plate\ is\ adequate\ for\ shear\ rupture$$

Appendix I
Procedure for Design of Pile-Founded Concrete Floodwalls to Resist Unbalanced Loads

I.1. Introduction and Background.

I.1.1. The design procedure described in this Appendix was developed in 2009, for use in the design of hurricane storm risk reduction in the New Orleans, LA, area. It was developed to incorporate complete loading on pile-founded T-walls, including part of the lateral earth load imposed on pile foundations due to a water surcharge acting on the waterside (flood side) ground surface (termed the unbalanced force). The procedure was necessary because of the very soft clay soils prevalent in the area. The procedure is presented in this manual as an example. This procedure may not be applicable for walls with loadings, soils, or configurations that are different from those used to develop this procedure (water surcharge on soft clay soils underlaying pile-founded T-type walls).

I.1.2. The procedure was based on information from detailed advanced numeric analysis of two different wall sections. The analyses were performed to provide information on basic behavior of the wall, pile, and soil system. The main T-wall section used for the study is shown in Figure I.1. English units are used in this example. See Appendix A for metric conversions.

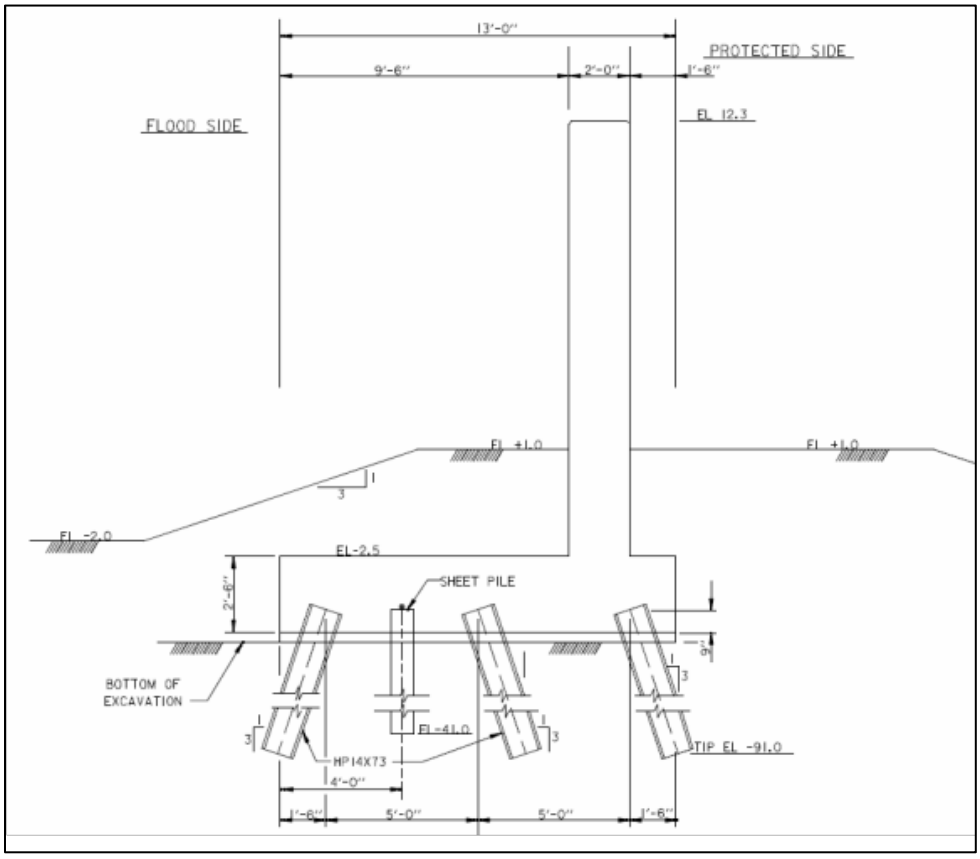

Figure I.1. T-Type Floodwall (T-Wall) Used in Development Study

I.1.3. An example of results from the numeric analysis of shear strain indicating behavior of the system are shown in Figure I.2 (water surcharge applied to the ground surface on the left side of the wall is not shown in the figure).

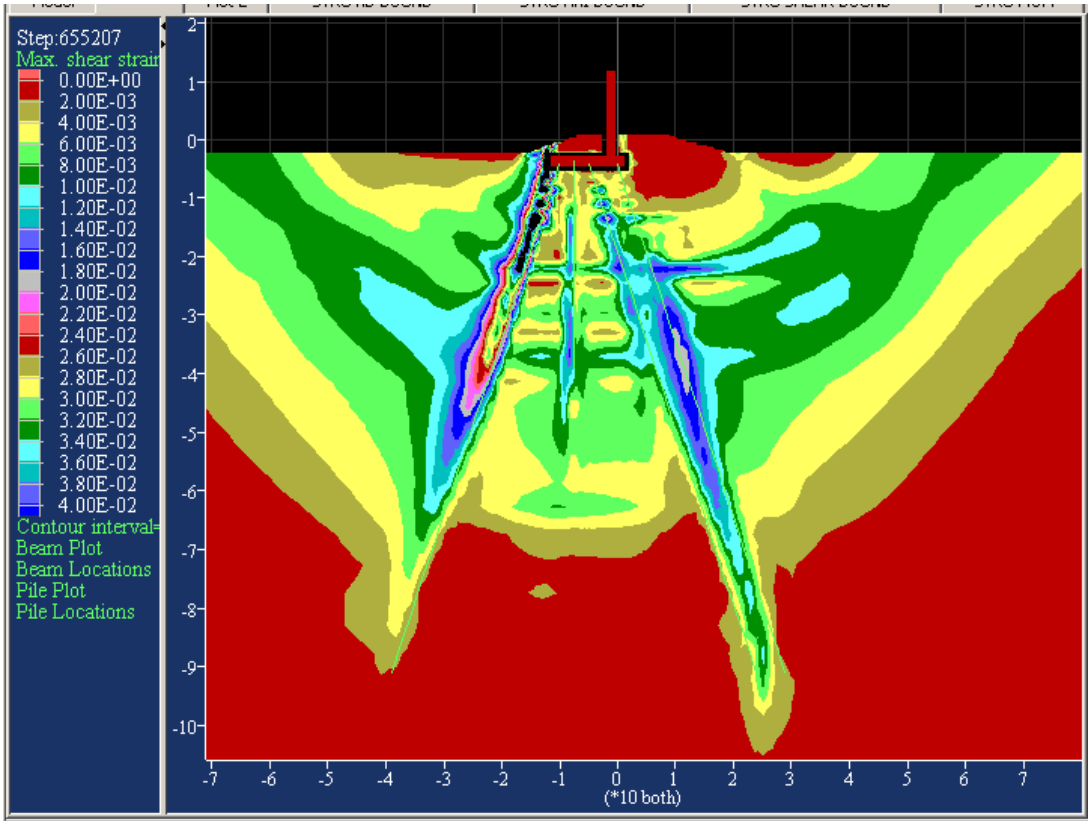

Figure I.2. Shear Strain Increment with Soil Strength Factored by 3.0

I.1.4. Slope stability is used to check the T-wall configuration, neglecting piles, and the water loads directly on the wall. If required minimum factors of safety for slope stability are not met, a balancing force is computed to achieve the required global factor of safety (unbalanced force). The unbalanced force is then applied in pile group analyses (along with water loads directly on the wall) to design a pile foundation system that will provide the required global factor of safety and resist all water loads. An example of the failure surface and balanced load found in the development of this procedure is shown in Figure I.3. Simplified methods, after further development, are described in Steps 1 and 2 of the procedure.

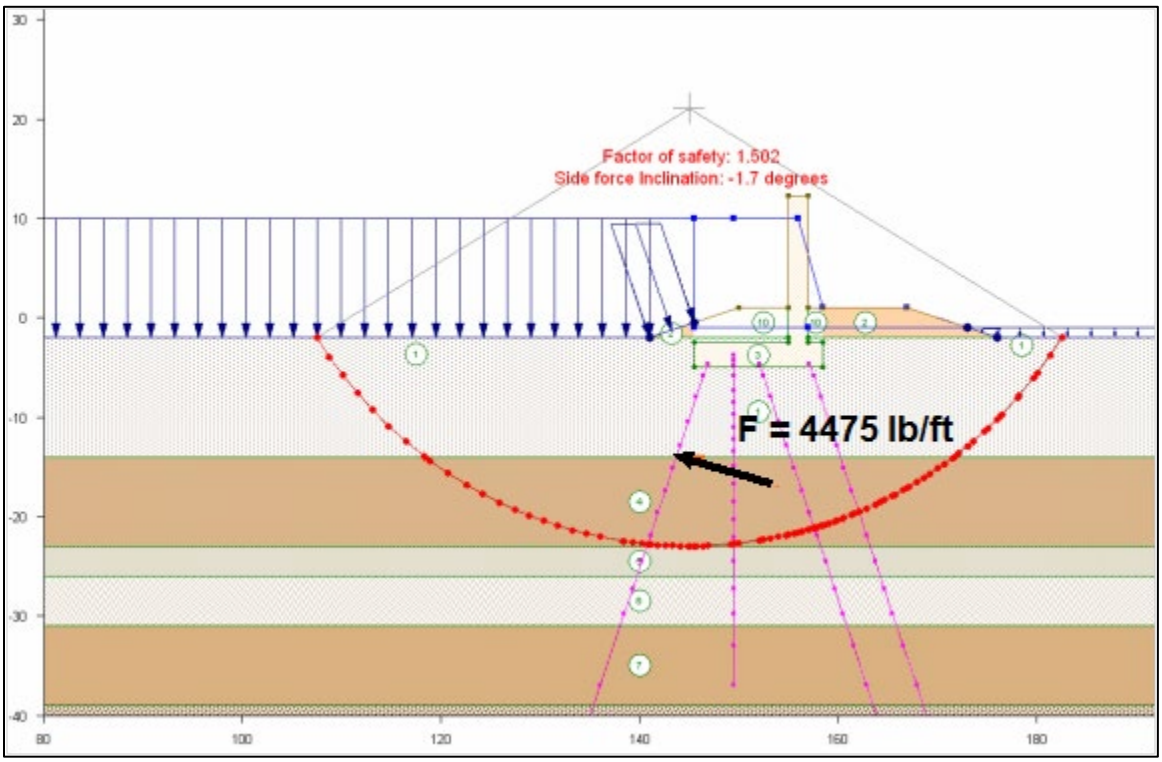

Figure I.3. Case Study, WL = Elevation 10 ft., T-Wall Global Stability with Location, Direction and Magnitude of Unbalanced Force Needed to Achieve a FS = 1.5

I.1.5. Basic Procedure.

I.1.5.1. The basic procedure was developed using a pile group analysis program (Group by Ensoft Inc.). This program models the piles as beam elements supported by p-y springs, and to which loads can be applied directly. The unbalanced force is applied as an equivalent, uniformly distributed, load to the foundation piles using a p-y spring-based pile group analysis program. Spring stiffness is reduced down to the critical failure surface to account for lack of soil support where the soil unbalanced force would be loading the piles. Direct water loads are also applied to the wall base and stem, and the axial loads for each pile are then compared with the allowable pile bearing capacity forces found from load tests or from computations.

I.1.5.2. Deflections of the T-wall are compared to allowable deflections. Combined axial, bending moment, and shear forces in the pile are checked to verify that they are within allowable pile limits from EM 1110-2-2906.

I.1.6. At the time of development of this procedure, the USACE group pile analysis computer program CPGA (Hartman et al., 1989) was predominantly used for design in New Orleans. This program uses simpler spring elements to model the piles but is capable of simultaneously running and checking pile capacity for multiple load cases so that design could be performed efficiently. Because of the common use of the program CPGA, this design

procedure includes a step where the initial pile layout is established using CPGA. A simplified approach is used to incorporate the unbalanced force.

I.1.7. A portion of the unbalanced force is applied directly to the pile cap with adjustments made to lateral spring stiffness. Following this initial design with CPGA a check of controlling load cases is performed with the more rigorous analyses described in the previous paragraph.

I.1.8. Note that all CPGA and other group pile analyses include unfactored service loads and unfactored soil properties.

I.2. Design Steps. For any design, the subsurface characteristics must be properly identified. This includes stratigraphy, material properties, and groundwater conditions. Material properties for wall design include unit weight, shear strength (drained or undrained depending on soil type and loading condition), and horizontal soil modulus. Once these are established the design method is completed following six steps. These steps are:

I.2.1. Step 1: An initial slope stability analysis.

I.2.2. Step 2: Computation of unbalanced forces.

I.2.3. Step 3: Allowable pile capacity analysis.

I.2.4. Step 4: Initial T-wall and pile design with CPGA (can be done with another program).

I.2.5. Step 5: Flow through check.

I.2.6. Step 6: Final pile group analysis.

I.3. Step 1. Initial Slope Stability Analysis.

I.3.1. Determine the critical (lowest factor of safety) non-circular failure surface from a slope stability analysis using a two-dimensional slope stability analysis program capable of performing Spencer's method with a robust search procedure (hereinafter termed Spencer's method). Sufficient limit equilibrium and finite element analyses were completed on varying soil profiles to establish that non-circular surfaces govern the stability assessment for pile-supported T-walls with foundation conditions like those encountered in the soft ground conditions in the New Orleans area. Furthermore, numerical modeling has indicated that soil displacement is nearly horizontal along the bottom of the failure surface.

I.3.2. The slope stability analysis should be performed with only water loads acting on the ground surface on the waterside of and beyond the heel of the T-wall because these are the loads that the foundation soil must resist to prevent a global stability failure. The slope stability analysis should not include any of the water, soil, or surcharge loads acting directly on the

structure because these loads are presumed to be carried by the battered piles to deeper soil layers, which in the New Orleans area are significantly stronger than near surface soils.

I.3.3. Global stability of T-walls includes the foundation materials on the landside of the wall. If those materials were removed, the walls would be required to support a larger unbalanced load. If the foundation on the landside of the T-wall does not satisfy required factors of safety, as might occur for a slope towards a ditch or canal, slope stability must either be improved to meet criteria or the less stable portion of the slope should be removed from the global stability model when calculating the unbalanced load. Landward berms and channel slope stability analysis must satisfy the minimum requirements of EM 1110-2-1918.

I.3.4. Only non-circular failure surfaces should be investigated, and they should include a horizontal plane along the failure surface. The portion of the sliding mass above this horizontal plane is referred to as the neutral block. The neutral block should have a minimum dimension of the greater of 0.7 *H* or the base length of the T-wall or structure. (Note that the 0.7*H* dimension is not related to the pile configuration but is instead the minimum horizontal distance considered reasonable for this portion of the slip surface.) *H* is defined as the vertical distance from the failure surface to the intersection of the failure plane with the ground surface (see Figure I.4). The upstream end of the neutral block is searched, but typically coincides with heel of the T-wall since the water surcharge loading is ended at this location.

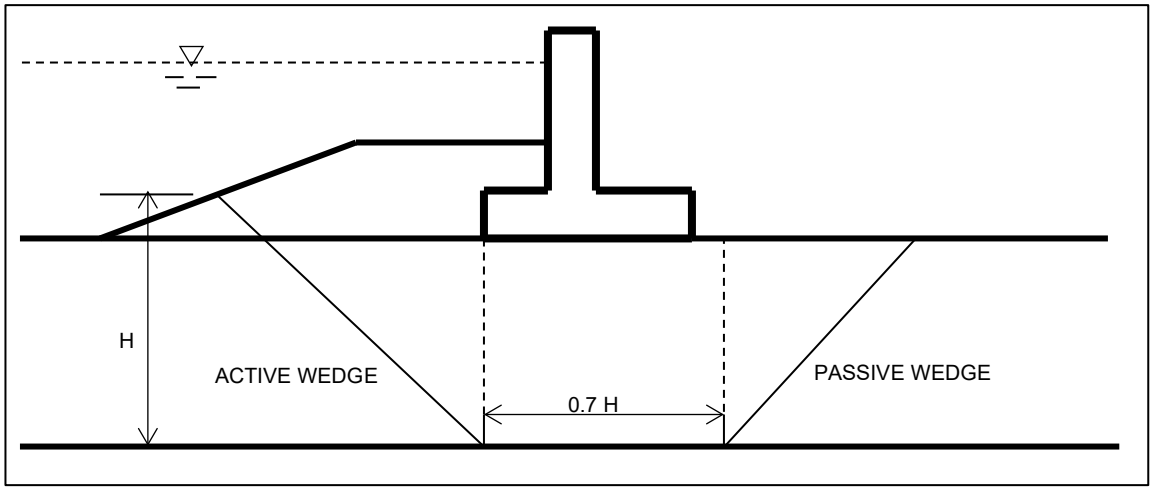

Figure I.4. Typical Failure Plane Beneath a T-Wall

I.3.5. If the factor of safety of the critical failure surface is equal to or greater than the minimum values required in Chapter 8, the structural analysis of the T-wall system is completed using only the water and soil loads applied directly to the structure (no unbalanced load). If the lowest factor of safety is less than required, then proceed to Step 2. The factor of safety and defining failure surface coordinates should be noted for use in Step 2.

I.4. Step 2. Unbalanced Force Computation.

I.4.1. Determine the unbalanced forces necessary to achieve the target factor of safety using Spencer's method with a non-circular failure surface search. The unbalanced force is applied as a horizontal line load at a location having a horizontal coordinate at the heel of the wall. The vertical coordinate is located at an elevation that is half-way between the ground surface at the heel of the wall and the elevation of the base of the neutral block for the slip surface being evaluated. (Note that a horizontal unbalanced force is used in this step whereas the analysis performed in Step 6 requires the unbalanced force to be applied normal to the piles.)

I.4.2. The unbalanced load is determined through a trial and error process where the load is varied until the desired factor of safety is achieved. The unbalanced load is determined for two conditions: (1) using the critical slip surface (least factor of safety) from Step 1 and (2) using the maximum unbalanced slip surface (highest unbalanced load). The first condition uses the critical surface from Step 1 and the unbalanced load that produces the desired factor of safety is determined by trial and error. The second condition requires a search in which both the sliding surface and the unbalanced load are varied until the highest unbalanced load that produces the desired factor of safety is found.

I.4.3. For this condition, the largest unbalanced load does not necessarily coincide with the failure surface with the lowest factor of safety; therefore, multiple failure surfaces at various elevations must be analyzed to determine the surface that requires the largest unbalanced force to produce the desired factor of safety. In these analyses the location of the unbalanced force is changed to accommodate the change in elevation of the failure surface, so that the elevation of the unbalanced force is half-way between the ground surface at the heel of the wall and the elevation of the base of the neutral block.

I.4.4. This procedure was developed by calibrating to advanced numeric models using the first condition mentioned above with the unbalanced load computed at the surface with the lowest factor of safety. Later it was noticed that higher unbalance loads could be computed for other failure surfaces, even though the factor of safety was higher. Despite some uncertainty with applicability of the second condition, the highest unbalanced load computed from either condition is used in subsequent steps. Therefore, the unbalanced load, the defining failure surface coordinates, and the factor of safety for both conditions should be recorded for use. The factor of safety associated with the maximum unbalanced slip surface (not including the unbalanced load) is needed for the p-y spring reduction discussed in Step 6.

I.5. Step 3. Allowable Pile Capacity Analyses.

I.5.1. Establish the allowable single pile axial (tension or compression) capacities. Axial capacity is determined according to EM 1110-2-2906. Axial capacities are determined for tensile and compressive piles. There is some uncertainty in the affect the unstable soil on the pile skin friction resistance. Therefore, the contribution of skin friction should not be accounted for above the maximum unbalanced slip surface found in Step 2 in the determination of the axial

capacity. Allowable axial loads may also be found using data from pile load tests and applying appropriate factors of safety after the ultimate load has been reduced to neglect the skin friction effects on capacity above the maximum unbalanced slip surface.

I.5.2. As stated above, no reductions to soil modulus values are made when computing axial pile capacity to account for repeated loadings; however, this only applies provided that the soil remains in the elastic region. This is accounted for by the factor of safety in the axial load capacity. To check this condition for lateral deformation of the pile in the soil, the pile group analysis discussed in Step 6 includes an analysis where the cyclic conditions are evaluated to verify that loading remains on the elastic portion of the p-y curve just below the slip surface used in the analysis.

I.6. Step 4. Initial T-Wall and Pile Design with CPGA.

I.6.1. Introduction. This design procedure was developed around group pile analysis using piles with p-y springs as described in Step 6. At the time of development, CPGA was commonly used for design and was very efficient for analysis of multiple load cases. Therefore, an initial design step using CPGA was developed as described here. However, the general analysis in Step 4 can be done using the more direct procedures described in Step 6 instead of using CPGA. That method is preferred. For certain cases with shallow failure surfaces (failure surface depths equal to the footing width or less), the procedure below using CPGA is not accurate. Analysis should be performed directly using the methods in Step 6 for these cases.

I.6.2. Equivalent Unbalanced Force Calculation.

I.6.2.1. CPGA can be used to analyze all load cases and perform a preliminary pile and T-wall design comparing computed pile loads to the allowable values found in the preceding step. For a given T-wall design, more than one unbalanced load and failure surface combination from Step 2 may need to be used in order to find the critical design case.

I.6.2.2. For the CPGA analysis, the unbalanced force is converted to an "equivalent" force applied to the bottom of the T-wall. It is calculated by a ratio derived by computing equivalent moments at the location of the maximum moment in the pile below the failure surface for which the unbalanced force was computed. The location of maximum moment is approximated from Figure 6.29 of "Pile Foundations in Engineering Practice" by Shamsher Prakash and Hari D. Sharma, 1990, as being about equal to the stiffness factor, R, below the ground surface. The equivalent force (excluding the unbalanced force above the base of the T-wall), $F_{cap,}$ is calculated as shown in Figure I.5.

$$F_{cap} = F_{ub}\left[\frac{\left(\frac{L_p}{2}+R\right)}{\left(L_p+R\right)}\right]\frac{L_p}{L_u} \qquad \text{(Equation I.1)}$$

Where:

F_{ub} = unbalanced force computed in Step 2

L_u = distance from top of ground at the waterside of the heel to the lowest elevation of the failure surface (in.)

L_p = distance from bottom of footing to lowest elevation of critical failure surface (in.)

R = stiffness factor, $(EI/E_s)^{1/4}$ (Equation I.2)

E = modulus of elasticity of pile (psi)

I = moment of inertia of pile (in^4)

E_s = subgrade modulus (psi) below the failure surface

For soft clay soils, E_s is commonly calculated as 32 q_u. Cyclic reductions and group reductions are not needed in this application.

For sand, E_s varies with depth. See Hartman et al. (1989).

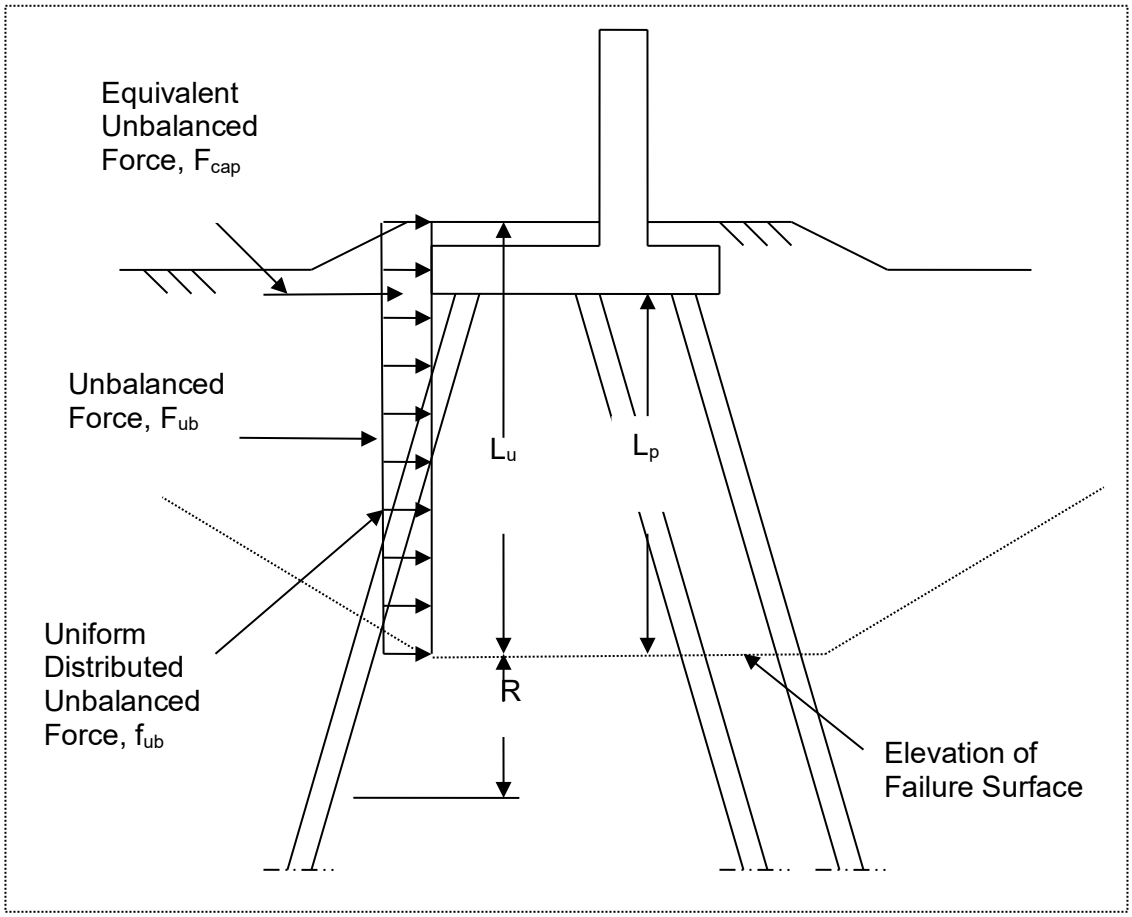

Figure I.5. Unbalanced Forces

I.6.2.3. In Equation I.1 and in the procedure presented in Step 6, the unbalanced force above the base of the footing is removed from the structural analysis when solving for F_{cap} using moment equilibrium. This is done because the loads applied in the structural analysis include a hydrostatic water force to the bottom of the footing. Lateral forces from water surcharge are already included in the unbalanced forced produced by the stability analysis. Removing the pressure from the unbalanced force above the footing while adding the lateral water pressure in the structural analysis will result in a total load somewhat equivalent to the total unbalanced force.

I.6.3. The magnitude and distribution of the unbalanced force, as presented, are not entirely consistent between Steps 3, 4, and 5. Comparisons of the design procedure with numerical models and analyses that do satisfy force equilibrium have demonstrated that the procedure is conservative for the cases checked.

I.6.4. The above procedure does not directly account for the unbalanced forces on the piles, and because of the limitations of CPGA does not adequately compute pile bending and shear forces from the unbalanced load. However, this procedure has been found to be adequate for

computing axial loads in the piles in order to determine a preliminary pile layout. Pile bending moments and shear forces that cannot be accurately computed with CPGA are checked using group pile analysis with models incorporating p-y springs in Step 6.

I.6.5. The lowest elevation of the failure surface is used, regardless of where the computed failure surface actually intersects the piles, as shown in Figure I.5. This simplification is due to the influence piles have on the location of the failure surface. This procedure is an approximation of the soil-structure interaction that numeric modelling results in shear surfaces similar to those shown in Figure I.2. This procedure is considered to provide acceptable design forces in the piles for preliminary design.

I.6.6. CPGA Analysis.

I.6.6.1. In CPGA, the top of soil is modeled at its actual elevation, and the subgrade modulus, E_s, is reduced with reduced global stability factors of safety to account for lack of support from the less stable soil mass located above the failure surface. For cases where the Step 1 global factor of safety is 1.0 or lower, E_s is input at an extremely low value, such as 0.00001 ksi (CPGA will not run with E_s set at 0.0). When the global factor of safety is greater than the target factor of safety there is no unbalanced force and there is no reduction in E_s.

I.6.6.2. For conditions where the factor of safety is between 1.0 and the target factor of safety, E_s is computed by multiplying the percentage of the computed factor of safety between 1.0 and the target factor of safety by the actual estimated value of E_s. For example, if the $FS = 1.0$, E_s is input as 0.00001. If the $FS = 1.2$, the target factor of safety is 1.5, and the estimated value of E_s below the T-wall base is 100 psi, then E_s is input at 40 percent of the actual estimated value, 40 psi.

I.6.6.3. This accounts for the fact that with higher factors of safety the unbalanced force is a small percentage of the total force, and the soil is able to resist some amount of the lateral forces from the wall. Although E_s is reduced, the full pile length is considered braced, provided the FOS is above 1.0. When the global factor of safety is below the target factor of safety, one reduced value of E_s is used throughout the depth of the pile between the bottom of the T-wall and the failure surface. There is no distinction in values between the leading and trailing rows of piles.

I.6.7. Group Reduction Factors. Group reduction factors are not required for analysis of the unbalanced load cases in Step 4 for several reasons.

I.6.7.1. The horizontal component of axial load in the battered piles provides most of the lateral resistance.

I.6.7.2. The E_s reduction used in the section I.6.6 is less precise than the pile group reduction factors and uses the same reduced E_s for all piles.

I.6.7.3. The governing load cases will be more accurately analyzed in Step 6.

I.6.8. Sheet Piling Design. A sheet pile cutoff wall should be included to control seepage. When unbalanced loads exist, sheet pile should be extended 5 ft. below the failure plane determined in Step 2 or to any greater depth needed to control seepage through layers below the failure surface. The sheet piling should be PZ-22 section or equivalent, and structural analysis is not required.

I.7. Step 5. Flow Through Check.

I.7.1. General.

I.7.1.1. This step addresses the resistance to soil flow of the failure wedge through the pile foundation. Water loading on the soil beyond the relieving base width of the T-wall superstructure results in a passive loading on the foundation piles where the soil tends to push through the piles, rather than an active loading where the piles tend to push through the soil. The foundation piles need to be checked for resistance to flow through, which is a function of pile spacing, magnitude of load and soil shear strength, and number of pile rows.

I.7.1.2. The center to center pile spacing perpendicular to the load should generally be limited to no more than seven times the pile diameter (or pile width in the case of square or H-piles).

I.7.1.3. To resist flow-through, the passive load capacity of the piles (ΣP_{all}) is checked against the unbalanced loading. In addition, this check will define the upper limit of possible loading on the waterside row of piles and may lead to redistribution of the unbalanced load for later Group 7 analysis. The procedure for performing this check is set up to evaluate this per monolith or by pile spacing (for uniformly spaced piles) as described in the following paragraphs.

I.7.2. Capacity Computation. Compute capacity of the waterside pile row using a basic lateral capacity:

$$\sum P_{all} = \frac{n \sum p_{ult}}{1.5} \times R_f \qquad \text{(Equation I.3)}$$

Where:

n = number of piles in the row perpendicular to the unbalanced load within a monolith. Or, for monoliths with uniformly spaced pile rows, n = 1.

R_f = group reduction factor for pile spacing parallel to the load.

Σp_{ult} is the peak load-transfer (in units of force), as computed by the integral of ultimate unit load-transfer, p_{ult}, over the length of piles above the slip surface.

$$\Sigma p_{ult} = \int_0^{Lp} p_{ult} dx \qquad \text{(Equation I.4)}$$

Therefore, Σp_{ult} is the summation of p_{ult} over the height L_p, as defined in paragraph I.6.2.2. For single layer soil p_{ult} can be multiplied by $L_{p.}$ For layered soils, p_{ult} for each layer is multiplied by the thickness of the layer and added over the height $L_{p.}$

For soft clay soils p_{ult} should be computed using the lower of

$$p_{ult} = \left(3 + \frac{\gamma'}{S_u}x + \frac{x}{2b}\right)S_u b` \qquad \text{(Equation I.5)}$$

Or $p_{ult} = (9S_u b)$ (Equation I.6)

S_u = soil undrained shear strength

x = depth below ground surface to the location where p_{ult} is calculated

b = pile width

γ' = effective weight of soil

I.7.3. For piles in a line, reduction factors should be applied as indicated in Equation I.3 to account for reduced ability for closely spaced piles to resist lateral soil movement. Group reduction factors, R_f, are calculated as shown below. Note that leading and trailing piles will be opposite of pile groups loaded at the pile cap, because the soil moves into the piles rather than the piles into the soil. Leading piles will be toward the waterside of the wall and trailing piles toward the landside as indicated in Figure I.6.

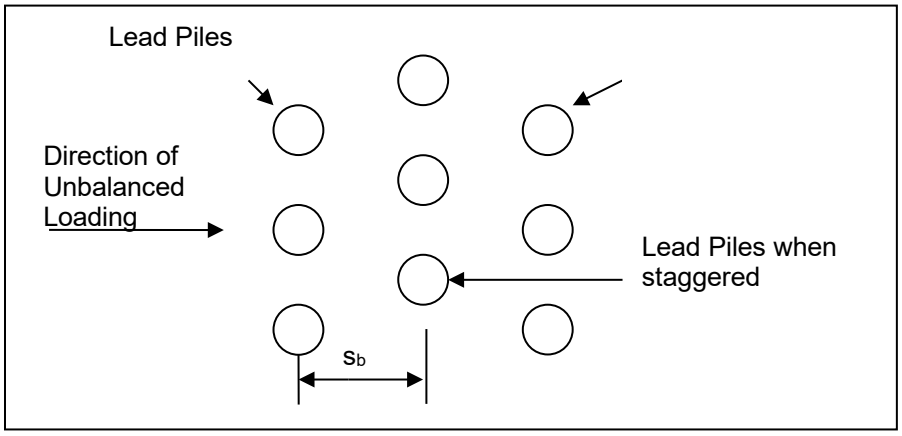

Figure I.6. Definition of Leading and Trailing Piles for Flow Through

R_f = group reduction factor for pile spacing parallel to the load are as follows:

For leading (waterside) piles:

$R_f = 0.7(s_b/b)^{0.26}$; or = 1.0 for $s_b/b > 4.0$ (Equation I.7)

For trailing piles, the reduction factor, R_f, is:

$R_f = 0.48(s_b/b)^{0.38}$; or = 1.0 for $s_b/b > 7.0$ (Equation I.8)

Where:

s_b = spacing between piles parallel to the loading

I.7.4. No reduction is needed for the pile spacing perpendicular to the load. That is because the pile spacing should be larger than the width of the interaction zone of 3.75 pile diameters to prevent problems with pile driving interference.

I.7.5. Group effects do not need to be considered between pile rows battered in opposite directions (battered away from each other). This is because of the pile spacing being larger than the width of the interaction zone. For instance, the middle row of piles in Figure E.5 may be treated as a leading row. A trailing row staggered from a leading row may be treated as a leading row, but additional rows should be treated as trailing, as shown in Figure E.6. The spacing between lead pile and the staggered pile (row spacing), in the direction of the load, should be equal to or less than the spacing between the leading piles.

I.7.6. Compute the unbalanced load on the piles (F_p) to check against $\sum P_{all}$:

$$F_p = wf_{ub}L_p \quad \text{(Equation I.9)}$$

w = Monolith width. Or, for monoliths with uniformly spaced pile rows, w = the pile spacing perpendicular to the unbalanced force (s_a).

$$f_{ub} = \frac{F_{ub}}{L_u} \quad \text{(Equation I.10)}$$

f_{ub} = uniformly distributed unbalanced force

F_{ub} = net unbalanced force per foot

L_u and L_p as defined in paragraph I.6.2.2

I.7.7. The number of piles is adequate to resist flow-through if ΣP_{all} for the waterside piles equals or exceeds $F_p/2$. If $F_p/2$ exceeds ΣP_{all} for the waterside piles, then compute ΣP_{all} for all

rows of piles. If ΣP_{all} is equal to or greater than F_p, the design is adequate against flow through. If ΣP_{all} is less than F_p, then the pile foundation will need to be modified (decreasing transverse pile spacing and/or increasing pile rows) until ΣP_{all} is equal to or greater than F_p.

I.7.8. For the purpose of subsequent pile group analyses, the load F_p is resisted by the full ΣP_{all} of the waterside row of piles and the balance of F_p is distributed to all piles behind the waterside row. ΣP_{all} is multiplied by R_f for any trailing piles behind the waterside row as shown in Equation I.3. Irregular pile layouts with rows that have far fewer piles than other rows should have increased load on the pile to account for greater lateral spacing.

I.8. Step 6. Pile Group Analysis.

I.8.1. Load Cases. To verify the preliminary CPGA design, a pile group analysis is performed using software incorporating p-y spring analysis and the ability to apply loads directly to pile elements (such Group by Ensoft Inc.). This is done to check pile loads and stresses. All loads, including the unbalanced loading, are applied to the pile foundation. The pile group reduction factors must be used. They are automatically computed by some software. Only load cases controlling deflections and pile loads and moments in Step 4 need to be checked.

I.8.2. This method can be used directly to design the piles instead using CPGA if desired. In that case all load cases are evaluated in the pile group analysis.

I.8.3. Loads Applied. Water pressures, applicable soil pressures, concrete weight, vessel impact, etc. are applied directly to the structure. The unbalanced load is applied as uniformly distributed load acting normal to, and along the length of, the bearing piles located above the failure plane to the base of the T-wall. The magnitude of this uniformly distributed unbalanced line load is f_{ub}, as calculated in Equation I.8. Applying the load normally is different from the horizontal direction of F_{ub}, but analyses have shown little impact of this for pile batters of 1H:2.5V or less. The unbalanced load above the base of the T-wall is omitted from further analysis, as explained in paragraph I.6.2.3.

I.8.4. Unbalanced Load Distribution.

I.8.4.1. For the pile group analysis, develop a model that incorporates the water and soil loads applied directly to the wall base and stem and also include the computed unbalanced force as distributed loads acting on the piles. At this point, the pile foundation has also been adjusted as needed to resist soil flow through as required in Step 5. The total distributed load on the piles (F_p) was defined in Equation I.9. Distribution of unbalanced loading onto the rows of piles is as follows.

I.8.4.2. If the total ultimate capacity (nSPult) of the waterside pile row is greater than or equal to 50 percent Fp, then 50 percent of Fp is applied to the waterside row of piles as a uniform line load along each pile equal to 0.5fub (variables are defined in paragraph I.7.6), and the remaining 50 percent of Fp is divided evenly among the remaining piles.

I.8.4.3. If the total ultimate capacity ($n\Sigma P_{ult}$) of the waterside piles is less than 50 percent of F_p, then the distributed load on each pile of the waterside row is set equal to ΣP_{ult} and the remaining amount of F_p is divided evenly among the remaining piles.

I.8.4.4. The distribution of load to the piles has a degree of uncertainty. If the condition in paragraph I.8.4.2 applies, then the pile group analysis should also be performed with 100 percent F_p applied to the waterside row of piles, but no more than ΣP_{ult}, as described above. This will assure that the piles are not structurally overstressed from combined axial, bending, and shear stresses. Pile allowables should be increased by 15 percent above any other overstress factors for this additional analysis.

I.8.5. Pile Group Analysis. The analysis will yield the response of the piles to all the loads applied to the T-wall system. P-Y curves can be generated for each soil layer in the foundation based on the strength and the soil type. Once the analysis is completed, the pile bending moment, shear, and axial force responses are determined from the output file. These forces must be determined from the pile's local coordinate system. They are automatically computed by some software.

I.8.6. P-Y Spring Reduction for Factor of Safety.

I.8.6.1. This analysis can be made using partial p-y springs to support the piles in the volume of the critical failure mass (soil between the bottom of the wall footing and the top of the slip surface) similar to reductions for the CPGA method found in section I.6.6. The partial p-y curves are interpolated on the basis of the global factor of safety without piles that corresponds to the unbalanced load computed in Step 2 (note that both stability/unbalanced force conditions and the corresponding factors of safety for each condition should be checked based on results from Step 2).

I.8.6.2. If the safety factor is less than or equal to 1, then the p-y curves inside the failure mass are zeroed out so that the soil in the failure mass offers no resistance to pile movement. If the factor of safety is between 1 and the target factor of safety, the p-y springs are partially activated based on the percentage that the unreinforced safety factor is between 1 and the target factor of safety. Thus, if the global factor of safety without piles is 1.2 and the target is 1.5, the p-y springs are 40 percent of the full spring stiffness. Forty percent stiffness is achieved by reducing the shear strengths in the soil layers by 60 percent in software that calculates P-Y curves from shear stiffness.

I.8.7. Structural Design Checks. Perform structural design checks of the piles and T-wall to ensure that selected components meet minimum requirements of this manual in the wall and of EM 1110-2-2906 in the piles. Check deflections to ensure that the wall meets serviceability requirements.

I.8.8. Geotechnical Design Checks. Compare the allowable geotechnical axial load capacities from Step 3 to the pile responses. If the axial forces in any pile exceed the allowable geotechnical pile loads, the piles are considered over capacity and the pile design must be reconfigured.

Appendix J
Earth Pressure Coefficient Commentary

J.1. General. This Appendix contains additional information on earth pressure coefficients, which may be useful in validation of full numeric analyses, or when performing parametric studies of wall performance. The focus is on bounding model results using upper bound (after Coulomb) and lower bound (after Rankine) solutions. Tables of earth pressure coefficients that account for friction angle (ϕ'), interface friction (δ'), wall angle (θ), and ground slope (β) are presented for design equations and numerical results.

J.2. Restrictions on Coefficient Method. The following restrictions were laid out in Chapter 6 and need to be followed if applying the coefficient method.

J.2.1. A reduced delta that is less than $\phi'/2$ needs to be used in the Coulomb equation and wedge method for passive earth pressures (Ebeling and Morrison, 1992; Ebeling et al., 2018).

J.2.2. Equation 6.20 (the Coulomb equation) should not be used with positive β values when calculating passive earth pressure coefficients.

J.3. Advances in Evaluation of Earth Pressure Coefficients.

J.3.1. Earth pressure coefficients of Caquot & Kerisel (1948), as presented in NAVFAC DM-7.2 (Department of the Navy, 1982), form the basis of traditional USACE design. However, there is not a simplified design equation for the coefficients and they provided an upper bound solution for analysis. If an upper bound is not optimized, it will underpredict soil loads and overpredict soil resistance.

J.3.2. Optimized solutions, which reduce model bias, have been presented by Powrie (2004) and Krabbenhoft (2018). Powrie (2004) used numerical assessment of a lower bound stress field solution (an improved optimization of the method of characteristics solution discussed by Sokolovskii, 1960). Krabbenhoft (2018) used numerical finite element limit analysis with meshes refined to a point where the upper bound and lower bound solutions converged (considered an exact solution). The optimized solutions of Powrie (2004) and Krabbenhoft (2018) are essentially equal for level ground conditions presented. This appendix compares analytical solutions to numerical results based on the methods from Krabbenhoft (2018) for an expanded range of wall conditions.

J.4. Definition of Parameters.

J.4.1. Earth pressure coefficient will vary due to:

J.4.1.1. Developed friction angle, ϕ'_d.

J.4.1.2. Wall friction, characterized using the interface friction coefficient, δ'; typically presented as the ratio of interface friction coefficient to friction angle, δ'/ϕ'.

J.4.1.3. Backfill slope, characterized using the angle β.

J.4.1.4. Wall angle, characterized using the angle θ.

J.4.2. Parameters used in earth pressure coefficient equations are illustrated in Figure J.3. Equations and charts presented in this appendix are general, but it is noted that some situations are atypical:

J.4.2.1. It is not typical to design for upward sloping backfill in front of a wall, +β, for K_P.

J.4.2.2. It is not typical to design for a wall to have a top width greater than the base width, -θ.

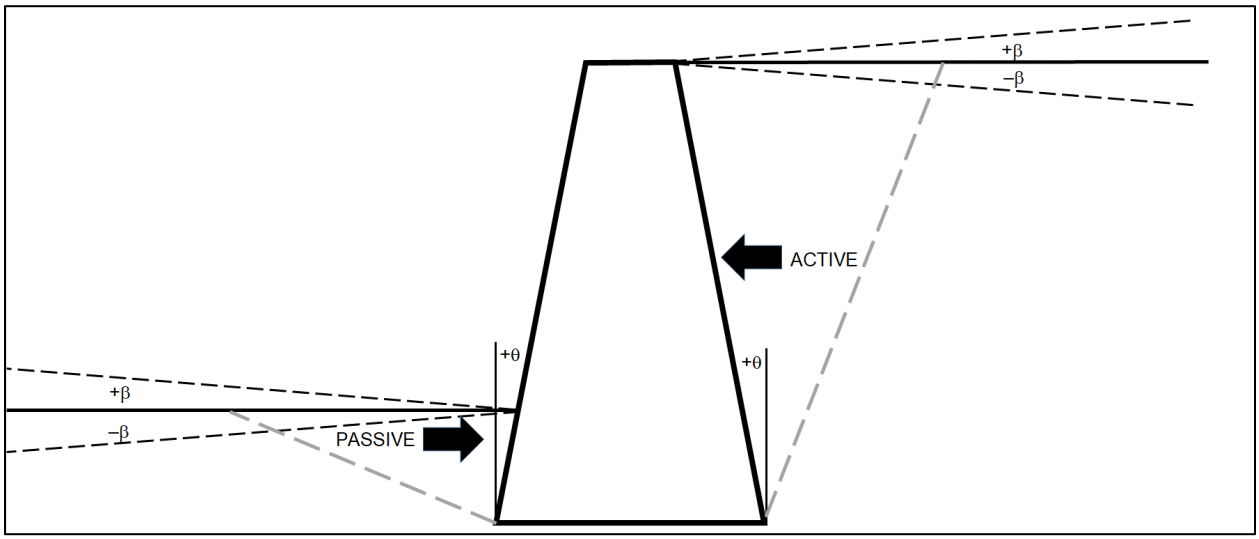

Figure J.3. Definition of Parameters Used in Earth Pressure Coefficient Calculations

J.5. Lower Bound Solutions.

J.5.1. A lower bound solution involves developing a statically admissible stress field in which the soil is not yielding at any point. Lower bound solutions of earth pressure coefficients are discussed for the vertical wall and non-sloping ground case in Powrie (2004, 2012). Cases with sloping ground and non-vertical walls are described in detail in Powrie (2004).

J.5.2. Active Earth Pressure Coefficient. For the active earth pressure coefficient accounting for δ, θ, and β, the Coulomb upper bound linear wedge solution is typically used in practice. The true solution will lie between the upper bound and a lower bound. The difference between the upper bound and lower bound solutions are indicative of model error with respect to

the earth pressure coefficient. Powrie (2004) presents a lower bound earth pressure coefficient equation accounting for δ, θ, and β as:

$$K_A = cos^2\beta \frac{1-sin\phi'_d cos[\Delta_2-\delta'_d]}{1+sin\phi'_d cos[\Delta_1+\beta]} e^{-(\Delta_2-\delta'-2\theta-\Delta_1+\beta)\cdot tan\phi'_d} \quad \text{(Equation J.1)}$$

Where:

$$\Delta_1 = asin\left(\frac{sin\beta}{sin\phi'_d}\right)$$

$$\Delta_2 = asin\left(\frac{sin\delta'_d}{sin\phi'_d}\right)$$

Angles Δ_2, δ', θ, Δ_1, and β should be in radians.

J.5.3. Passive Earth Pressure Coefficient.

J.5.3.1. A lower bound solution for the passive earth pressure coefficient equation, which accounts for δ', θ, and β, was not explicitly presented in Powrie (2004), however, can be developed based on the discussions in that reference.

$$K_P = \frac{1}{cos^2\beta} \cdot \frac{1+sin\phi'_d cos[\Delta_2+\delta'_d]}{1-sin\phi'_d cos[\Delta_1+\beta]} e^{(\Delta_2+\delta'_d-2\theta+\Delta_1+\beta)\cdot tan\phi'_d} \quad \text{(Equation J.2)}$$

Where:

$$\Delta_1 = asin\left(\frac{sin\beta}{sin\phi'_d}\right)$$

$$\Delta_2 = asin\left(\frac{sin\delta'_d}{sin\phi'_d}\right)$$

J.5.3.2. Angles Δ_2, δ', θ, Δ_1, and β should be in radians, noting that Δ_1 and Δ_2 are the same as that used in Equation J.1. A lower bound equation is useful for parametric studies since it will always be conservative. The true solution will lie between an upper bound (such as a Coulomb, log spiral) and lower bound. The difference between the upper bound and lower bound solutions are indicative of model error with respect to the earth pressure coefficient.

J.6. Optimized Numerical Solutions.

J.6.1. Finite element limit analysis (FELA) was performed following the methods presented in Krabbenhoft (2018) to extend the tabulated value of optimized earth pressure coefficients to include effects of sloping ground and wall slope.

J.6.2. Lower bound analyses used 10,000 lower bound elements and seven adaptive meshing iterations. Lower bound elements solve for stresses as the primary variables, with strains and displacements being secondary quantities. Upper bound analyses used 5,000 15-node Gauss elements with six adaptive meshing iterations. Use of 15-node Gauss elements is not a

rigorous upper bound, but the solution does converge from above. Upper bound, and Gauss elements that converge from above, solve for displacements as the primary variables, with stresses being secondary quantities.

J.7. Comparison of Solutions.

J.7.1. The follow section will present comparison tables and figures for the four main parameters within each design equation. The baseline case has δ'/ϕ' of 0.5, β of 0, and θ of 0. Use of δ'/ϕ' of 0.5 is consistent with USACE practice and allows for comparison to the Coulomb equation for cases considered generally acceptable.

J.7.2. Friction Angle, ϕ'.

J.7.2.1. Friction angles were varied from 0 to 52 degrees in increments of 4 degrees for analyses. In addition to the baseline case, δ'/ϕ' of 1 was analyzed to highlight differences in the methods. Earth pressure coefficients for various methods are shown in Figure J.4 and included in

J.7.2.2. Table J.1 and Table J.2. It is noted that figures are semi-log scale, and small visual differences between methods can actually be relatively high, on the order of 30 percent.

J.7.2.3. When performing a calculation with δ'/ϕ' of unity, Figure J.4 shows that the Coulomb equation can be used to calculate K_P well in excess of 100. This is due, primarily, to the $(\phi'+\delta')$ term in Equation 6.20. For level ground and vertical walls when $(\phi'+\delta')$ is 90° and $\sin(\phi')/\cos(\delta')$ is unity ($\delta' = \phi'$, and $\phi' = 45^o$), the denominator of Equation 6.20 becomes zero $[(1 - \text{sqrt}(\sin(90^o)\sin(45^o)/\cos(45^o))]$ and the calculated K_P becomes infinite. Depending upon δ'/ϕ', β, and θ, the friction angle where the denominator becomes zero in the Coulomb equation varies. This issue with the Coulomb equation format leads to the restrictions on its use discussed in Chapter 6 and this appendix.

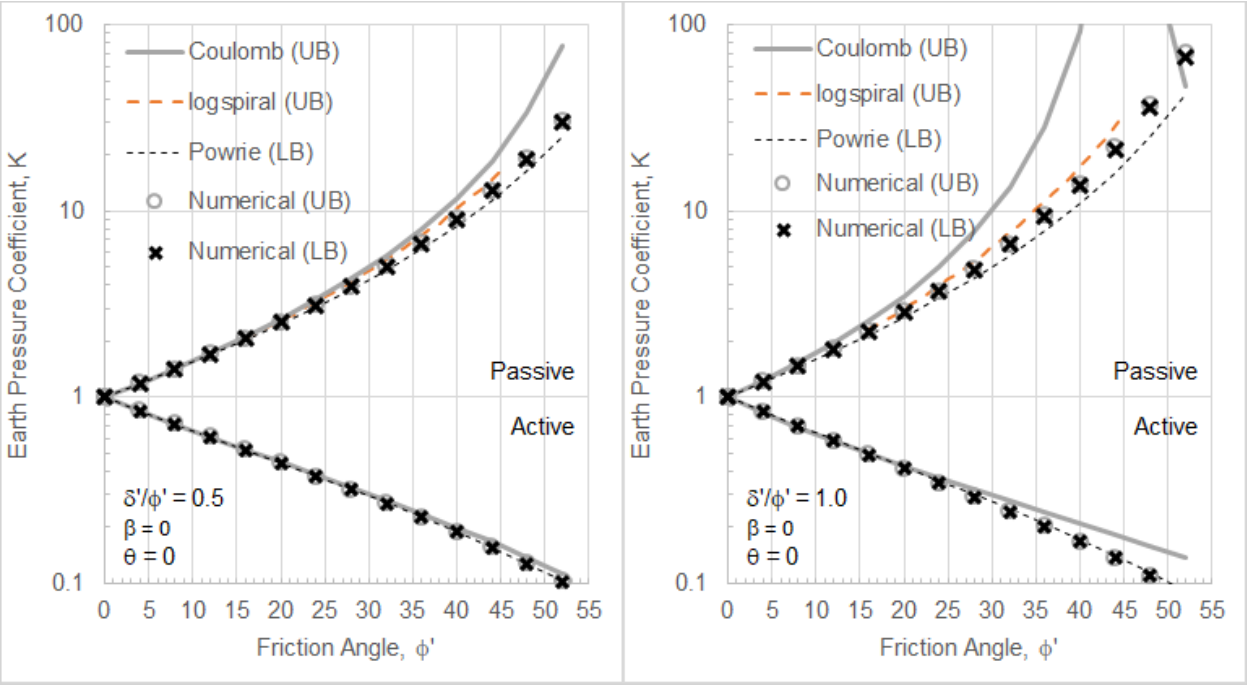

Figure J.4. Influence of Friction Angle on Earth Pressure Coefficients

Table J.1
Influence of Friction Angle on Active Earth Pressure Coefficient

ϕ'_d (deg)	δ'/ϕ'	β/ϕ'_d	β (deg)	θ (deg)	δ (deg)	K_a Powrie (LB)	K_a Numerical (LB)	K_a Numerical (UB)	K_a Coulomb (UB)
0	0.5	0	0	0	0	1.000	1.000	1.000	1.000
4	0.5	0	0	0	2	0.848	0.846	0.846	0.845
8	0.5	0	0	0	4	0.721	0.719	0.718	0.718
12	0.5	0	0	0	6	0.613	0.611	0.611	0.612
16	0.5	0	0	0	8	0.522	0.520	0.520	0.522
20	0.5	0	0	0	10	0.445	0.443	0.442	0.447
24	0.5	0	0	0	12	0.378	0.376	0.376	0.382
28	0.5	0	0	0	14	0.320	0.319	0.318	0.326
32	0.5	0	0	0	16	0.270	0.269	0.269	0.278
36	0.5	0	0	0	18	0.227	0.226	0.226	0.236
40	0.5	0	0	0	20	0.189	0.188	0.188	0.199
44	0.5	0	0	0	22	0.156	0.156	0.156	0.167
48	0.5	0	0	0	24	0.128	0.127	0.127	0.139
52	0.5	0	0	0	26	0.103	0.103	0.102	0.114
0	1	0	0	0	0	1.000	1.000	1.000	1.000
4	1	0	0	0	4	0.838	0.833	0.832	0.826
8	1	0	0	0	8	0.704	0.696	0.696	0.691
12	1	0	0	0	12	0.593	0.584	0.584	0.584
16	1	0	0	0	16	0.500	0.491	0.491	0.498
20	1	0	0	0	20	0.422	0.413	0.413	0.427
24	1	0	0	0	24	0.355	0.347	0.347	0.368
28	1	0	0	0	28	0.298	0.291	0.291	0.319
32	1	0	0	0	32	0.250	0.243	0.243	0.277
36	1	0	0	0	36	0.208	0.202	0.202	0.241
40	1	0	0	0	40	0.172	0.167	0.167	0.210
44	1	0	0	0	44	0.141	0.137	0.136	0.183
48	1	0	0	0	48	0.114	0.110	0.110	0.159
52	1	0	0	0	52	0.091	0.088	0.088	0.138

Table J.2
Influence of Friction Angle on Passive Earth Pressure Coefficient

ϕ'_d (deg)	δ'/ϕ'	β/ϕ'_d	β (deg)	θ (deg)	δ'_d (deg)	K_p Powrie (LB)	K_p Numerical (LB)	K_p Numerical (UB)	K_p Logspiral (UB)	K_p Coulomb (UB)
0	0.5	0	0.0	0	0	1.00	1.00	1.00	1.00	1.00
4	0.5	0	0.0	0	2	1.18	1.19	1.19	1.19	1.19
8	0.5	0	0.0	0	4	1.41	1.41	1.42	1.42	1.43
12	0.5	0	0.0	0	6	1.69	1.70	1.70	1.70	1.73
16	0.5	0	0.0	0	8	2.03	2.06	2.06	2.07	2.12
20	0.5	0	0.0	0	10	2.48	2.52	2.52	2.59	2.64
24	0.5	0	0.0	0	12	3.05	3.13	3.13	3.25	3.34
28	0.5	0	0.0	0	14	3.81	3.94	3.94	4.16	4.33
32	0.5	0	0.0	0	16	4.85	5.06	5.07	5.52	5.77
36	0.5	0	0.0	0	18	6.29	6.66	6.68	7.43	8.02
40	0.5	0	0.0	0	20	8.38	9.07	9.09	10.4	11.8
44	0.5	0	0.0	0	22	11.5	12.8	12.9	14.8	18.7
48	0.5	0	0.0	0	24	16.5	19.0	19.2	24.8	33.8
52	0.5	0	0.0	0	26	25.1	30.1	30.5	39.3	77.1
0	1	0	0.0	0	0	1.00	1.00	1.00	1.00	1.00 **
4	1	0	0.0	0	4	1.20	1.21	1.21	1.22	1.23 **
8	1	0	0.0	0	8	1.45	1.47	1.47	1.48	1.54 **
12	1	0	0.0	0	12	1.76	1.81	1.81	1.83	1.96 **
16	1	0	0.0	0	16	2.17	2.26	2.26	2.31	2.58 **
20	1	0	0.0	0	20	2.70	2.86	2.86	3.01	3.53 **
24	1	0	0.0	0	24	3.41	3.69	3.70	3.97	5.06 **
28	1	0	0.0	0	28	4.39	4.86	4.88	5.40	7.82 **
32	1	0	0.0	0	32	5.79	6.62	6.65	7.70	13.5 **
36	1	0	0.0	0	36	7.85	9.32	9.40	11.3	28.4 **
40	1	0	0.0	0	40	11.0	13.7	13.9	17.5	92.6 **
44	1	0	0.0	0	44	16.2	21.5	21.9	28.6	2321 **
48	1	0	0.0	0	48	25.3	36.1	37.1	56.5	258 **
52	1	0	0.0	0	52	42.7	66.6	70.0	110	47 **

** For information only, restricted from use in analysis, $\delta'/\phi' > 0.5$ and/or positive β and/or negative θ.

J.7.3. Interface Friction Angle Ratio, δ'/ϕ'. Ratios of interface friction angle to friction angle (δ'/ϕ') were varied from 0 to 1 in increments of 0.1 for analyses. In addition, typical ratios of 0.33, 0.67, and 0.75 were analyzed. Friction angles of 30 degrees and 44 degrees were analyzed to evaluate typical cases (ϕ' = 30) as compared to those with a higher friction angle (ϕ' = 44) that show larger variations. Agreement between methods improve as ϕ' reduces. Earth pressure coefficients for various methods are shown in Figure J.5 and included in Table J.3 and Table J.4.

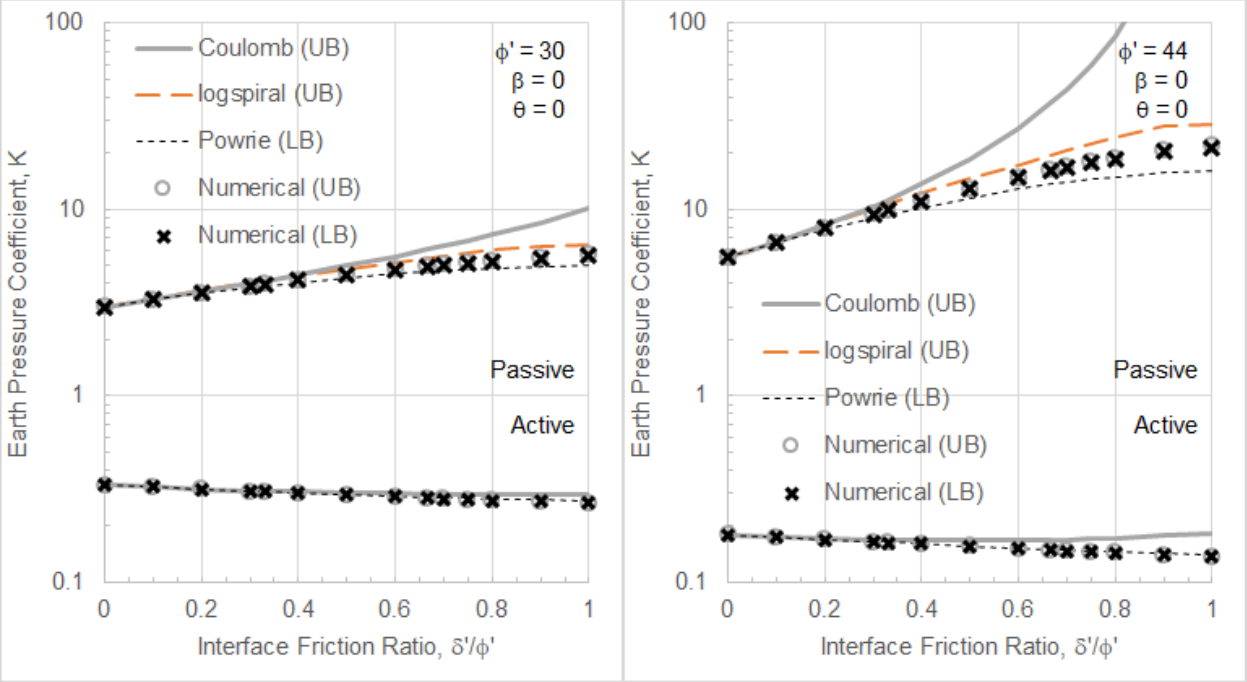

Figure J.5. Influence of Interface Friction Angle on Earth Pressure Coefficients

Table J.3
Influence of Interface Friction Angle on Active Earth Pressure Coefficient

ϕ'_d (deg)	δ'/ϕ'	β/ϕ'_d	β (deg)	θ (deg)	δ'_d (deg)	K_a Powrie (LB)	K_a Numerical (LB)	K_a Numerical (UB)	K_a Coulomb (UB)
30	1	0	0	0	30	0.273	0.266	0.266	0.297
30	0.9	0	0	0	27	0.275	0.270	0.270	0.296
30	0.8	0	0	0	24	0.279	0.275	0.275	0.296
30	0.75	0	0	0	22.5	0.281	0.278	0.278	0.296
30	0.7	0	0	0	21	0.284	0.281	0.281	0.297
30	0.67	0	0	0	20	0.285	0.283	0.282	0.297
30	0.6	0	0	0	18	0.289	0.287	0.286	0.299
30	0.5	0	0	0	15	0.294	0.293	0.293	0.301
30	0.4	0	0	0	12	0.301	0.300	0.300	0.305
30	0.33	0	0	0	9.9	0.306	0.305	0.304	0.309
30	0.3	0	0	0	9	0.308	0.307	0.307	0.310
30	0.2	0	0	0	6	0.315	0.315	0.315	0.316
30	0.1	0	0	0	3	0.324	0.324	0.324	0.324
30	0	0	0	0	0	0.333	0.333	0.333	0.333
44	1	0	0	0	44	0.141	0.137	0.136	0.183
44	0.9	0	0	0	39.6	0.143	0.140	0.140	0.177
44	0.8	0	0	0	35.2	0.146	0.144	0.144	0.173
44	0.75	0	0	0	33	0.147	0.146	0.145	0.171
44	0.7	0	0	0	30.8	0.149	0.148	0.147	0.170
44	0.67	0	0	0	29.3	0.150	0.149	0.149	0.169
44	0.6	0	0	0	26.4	0.153	0.152	0.151	0.168
44	0.5	0	0	0	22	0.156	0.156	0.156	0.167
44	0.4	0	0	0	17.6	0.161	0.160	0.160	0.167
44	0.33	0	0	0	14.5	0.164	0.163	0.163	0.168
44	0.3	0	0	0	13.2	0.165	0.165	0.164	0.169
44	0.2	0	0	0	8.8	0.170	0.169	0.169	0.171
44	0.1	0	0	0	4.4	0.175	0.175	0.174	0.175
44	0	0	0	0	0	0.180	0.180	0.180	0.180

Table J.4
Influence of Interface Friction Angle on Passive Earth Pressure Coefficient

ϕ'_d (deg)	δ'/ϕ'	β/ϕ'_d	β (deg)	θ (deg)	δ'_d (deg)	K_p Powrie (LB)	K_p Numerical (LB)	K_p Numerical (UB)	K_p Logspiral (UB)	K_p Coulomb (UB)
30	1	0	0	0	30	5.03	5.65	5.68	6.42	10.1 **
30	0.9	0	0	0	27	4.97	5.5	5.51	6.29	8.54 **
30	0.8	0	0	0	24	4.85	5.28	5.29	6.02	7.33 **
30	0.75	0	0	0	22.5	4.78	5.15	5.17	5.83	6.83 **
30	0.7	0	0	0	21	4.69	5.02	5.03	5.64	6.38 **
30	0.67	0	0	0	20	4.63	4.93	4.94	5.49	6.11 **
30	0.6	0	0	0	18	4.5	4.75	4.75	5.21	5.61 **
30	0.5	0	0	0	15	4.29	4.45	4.46	4.79	4.98
30	0.4	0	0	0	12	4.05	4.16	4.16	4.40	4.45
30	0.33	0	0	0	9.9	3.88	3.96	3.96	4.15	4.13
30	0.3	0	0	0	9	3.80	3.86	3.86	4.03	4.00
30	0.2	0	0	0	6	3.54	3.56	3.57	3.69	3.62
30	0.1	0	0	0	3	3.27	3.28	3.28	3.34	3.29
30	0	0	0	0	0	3.00	3.00	3.00	3.00	3.00
44	1	0	0	0	44	16.2	21.5	21.9	28.6	2321 **
44	0.9	0	0	0	39.6	15.8	20.4	20.6	28.0	235 **
44	0.8	0	0	0	35.2	15	18.7	18.9	24.5	85.2 **
44	0.75	0	0	0	33	14.5	17.7	17.9	22.7	59.7 **
44	0.7	0	0	0	30.8	14	16.8	16.9	20.9	44.3 **
44	0.67	0	0	0	29.3	13.6	16.1	16.2	19.8	37.2 **
44	0.6	0	0	0	26.4	12.8	14.7	14.9	17.6	27.4 **
44	0.5	0	0	0	22	11.5	12.8	12.9	14.8	18.7
44	0.4	0	0	0	17.6	10.2	11	11	12.4	13.7
44	0.33	0	0	0	14.5	9.35	9.88	9.9	11.0	11.3
44	0.3	0	0	0	13.2	8.97	9.36	9.37	10.3	10.4
44	0.2	0	0	0	8.8	7.75	7.9	7.91	8.5	8.26
44	0.1	0	0	0	4.4	6.6	6.64	6.65	6.9	6.71
44	0	0	0	0	0	5.55	5.55	5.55	5.5	5.55

** For information only, restricted from use in analysis, $\delta'/\phi' > 0.5$ and/or positive β and/or negative θ.

J.7.4. Sloping Backfill, β. Sloping backfill was assessed using slope angle as a ratio of friction angle, β/ϕ'. When β = ϕ' a slope failure would occur, so β/ϕ' ratios were selected to be equally spaced between -0.8 to 0.8. For consistency with assessment of interface friction angle, friction angles of 30 degrees and 44 degrees were analyzed. Earth pressure coefficients for various methods are shown in Figure J.6, and included in Table J.5 and Table J.6.

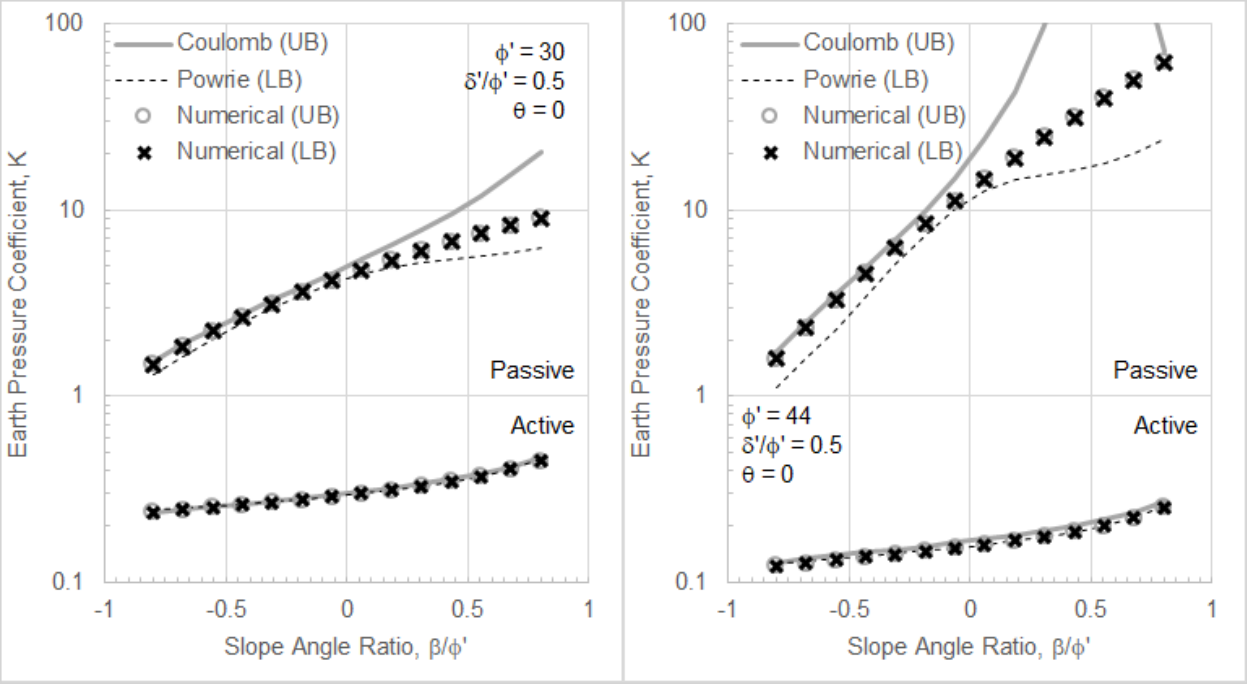

Figure J.6. Influence of Backfill Slope on Earth Pressure Coefficients

Table J.5
Influence of Backfill Slope on Active Earth Pressure Coefficient

ϕ'_d (deg)	δ'/ϕ'	β/ϕ'_d	β (deg)	θ (deg)	δ'_d (deg)	K_a Powrie (LB)	K_a Numerical (LB)	K_a Numerical (UB)	K_a Coulomb (UB)
30	0.5	-0.8	-24.0	0	15	0.247	0.238	0.238	0.238
30	0.5	-0.677	-20.3	0	15	0.251	0.244	0.244	0.246
30	0.5	-0.554	-16.6	0	15	0.257	0.252	0.252	0.255
30	0.5	-0.431	-12.9	0	15	0.264	0.259	0.259	0.264
30	0.5	-0.308	-9.2	0	15	0.271	0.268	0.268	0.274
30	0.5	-0.185	-5.5	0	15	0.280	0.277	0.277	0.284
30	0.5	-0.061	-1.8	0	15	0.289	0.287	0.287	0.295
30	0.5	0.062	1.9	0	15	0.300	0.299	0.299	0.308
30	0.5	0.185	5.5	0	15	0.313	0.312	0.312	0.322
30	0.5	0.308	9.2	0	15	0.328	0.328	0.328	0.339
30	0.5	0.431	12.9	0	15	0.347	0.347	0.347	0.360
30	0.5	0.554	16.6	0	15	0.372	0.371	0.371	0.385
30	0.5	0.677	20.3	0	15	0.405	0.404	0.404	0.418
30	0.5	0.800	24.0	0	15	0.455	0.450	0.450	0.467
44	0.5	-0.8	-35.2	0	22	0.127	0.122	0.122	0.128
44	0.5	-0.677	-29.8	0	22	0.130	0.127	0.127	0.134
44	0.5	-0.554	-24.4	0	22	0.134	0.131	0.131	0.139
44	0.5	-0.431	-19.0	0	22	0.138	0.136	0.136	0.145
44	0.5	-0.308	-13.5	0	22	0.143	0.141	0.141	0.151
44	0.5	-0.185	-8.1	0	22	0.148	0.147	0.147	0.157
44	0.5	-0.061	-2.7	0	22	0.153	0.152	0.152	0.164
44	0.5	0.062	2.7	0	22	0.160	0.159	0.159	0.171
44	0.5	0.185	8.1	0	22	0.167	0.167	0.167	0.179
44	0.5	0.308	13.5	0	22	0.176	0.175	0.175	0.189
44	0.5	0.431	19.0	0	22	0.187	0.186	0.186	0.202
44	0.5	0.554	24.4	0	22	0.201	0.201	0.201	0.217
44	0.5	0.677	29.8	0	22	0.222	0.221	0.221	0.239
44	0.5	0.800	35.2	0	22	0.256	0.253	0.253	0.273

Table J.6
Influence of Backfill Slope on Passive Earth Pressure Coefficient

ϕ'_d (deg)	δ'/ϕ'	β/ϕ'_d	β (deg)	θ (deg)	δ'_d (deg)	K_p Powrie (LB)	K_p Numerical (LB)	K_p Numerical (UB)	K_p Coulomb (UB)
30	0.5	-0.8	-24.0	0	15	1.30	1.48	1.49	1.54
30	0.5	-0.677	-20.3	0	15	1.63	1.85	1.85	1.91
30	0.5	-0.554	-16.6	0	15	2.02	2.24	2.24	2.31
30	0.5	-0.431	-12.9	0	15	2.47	2.66	2.66	2.76
30	0.5	-0.308	-9.2	0	15	2.97	3.13	3.13	3.27
30	0.5	-0.185	-5.5	0	15	3.51	3.62	3.63	3.87
30	0.5	-0.061	-1.8	0	15	4.04	4.17	4.17	4.57
30	0.5	0.062	1.9	0	15	4.52	4.75	4.76	5.43 **
30	0.5	0.185	5.5	0	15	4.91	5.37	5.38	6.48 **
30	0.5	0.308	9.2	0	15	5.22	6.03	6.04	7.82 **
30	0.5	0.431	12.9	0	15	5.47	6.73	6.75	9.58 **
30	0.5	0.554	16.6	0	15	5.70	7.45	7.47	12.0 **
30	0.5	0.677	20.3	0	15	5.95	8.23	8.25	15.3 **
30	0.5	0.800	24.0	0	15	6.29	9.02	9.05	20.5 **
44	0.5	-0.8	-35.2	0	22	1.11	1.59	1.59	1.71
44	0.5	-0.677	-29.8	0	22	1.59	2.32	2.32	2.51
44	0.5	-0.554	-24.4	0	22	2.30	3.28	3.29	3.54
44	0.5	-0.431	-19.0	0	22	3.41	4.58	4.59	4.95
44	0.5	-0.308	-13.5	0	22	5.08	6.25	6.27	6.96
44	0.5	-0.185	-8.1	0	22	7.42	8.41	8.43	10.0
44	0.5	-0.061	-2.7	0	22	10.2	11.1	11.2	15.0
44	0.5	0.062	2.7	0	22	12.7	14.6	14.7	24.0 **
44	0.5	0.185	8.1	0	22	14.5	19.0	19.2	43.2 **
44	0.5	0.308	13.5	0	22	15.6	24.5	24.7	98.6 **
44	0.5	0.431	19.0	0	22	16.5	31.3	31.6	415 **
44	0.5	0.554	24.4	0	22	17.9	39.6	40.2	69999 **
44	0.5	0.677	29.8	0	22	20.2	49.7	50.6	286 **
44	0.5	0.800	35.2	0	22	24.2	61.6	62.8	71.4 **

** For information only, restricted from use in analysis, $\delta'/\phi' > 0.5$ and/or positive β and/or negative θ.

J.7.5. Wall Angle, θ. Wall angle was analyzed for θ between -25 degrees and 25 degrees using equally spaced increments. For consistency with assessment of interface friction angle and sloping backfill angle, friction angles of 30 degrees and 44 degrees were analyzed. Earth pressure coefficients for various methods are shown in Figure J.7, and included in Table J.7 and Table J.8.

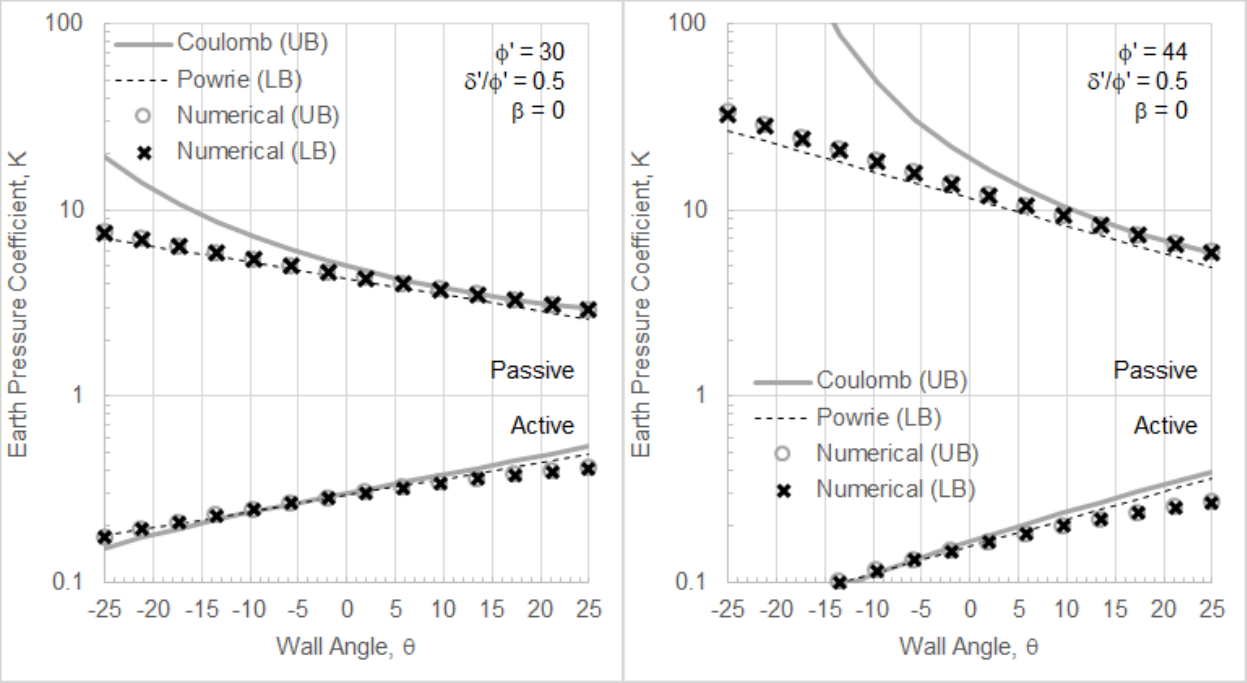

Figure J.7. Influence of Wall Angle on Earth Pressure Coefficients

Table J.7
Influence of Wall Angle on Active Earth Pressure Coefficient

ϕ'_d (deg)	δ'/ϕ'	β/ϕ'_d	β (deg)	θ (deg)	δ'_d (deg)	K_a Powrie (LB)	K_a Numerical (LB)	K_a Numerical (UB)	K_a Coulomb (UB)
30	0.5	0	0	-25.0	15	0.178	0.174	0.174	0.153
30	0.5	0	0	-21.2	15	0.192	0.192	0.192	0.174
30	0.5	0	0	-17.3	15	0.208	0.210	0.210	0.195
30	0.5	0	0	-13.5	15	0.224	0.228	0.228	0.217
30	0.5	0	0	-9.6	15	0.242	0.246	0.246	0.239
30	0.5	0	0	-5.8	15	0.262	0.265	0.264	0.263
30	0.5	0	0	-1.9	15	0.283	0.283	0.283	0.288
30	0.5	0	0	1.9	15	0.306	0.303	0.302	0.315
30	0.5	0	0	5.8	15	0.331	0.322	0.322	0.344
30	0.5	0	0	9.6	15	0.357	0.341	0.341	0.375
30	0.5	0	0	13.5	15	0.386	0.360	0.360	0.409
30	0.5	0	0	17.3	15	0.417	0.378	0.378	0.447
30	0.5	0	0	21.2	15	0.451	0.395	0.395	0.489
30	0.5	0	0	25.0	15	0.487	0.411	0.411	0.537
44	0.5	0	0	-25.0	22	0.067	0.059	0.059	0.046
44	0.5	0	0	-21.2	22	0.077	0.073	0.073	0.061
44	0.5	0	0	-17.3	22	0.087	0.086	0.086	0.077
44	0.5	0	0	-13.5	22	0.099	0.101	0.100	0.094
44	0.5	0	0	-9.6	22	0.113	0.116	0.115	0.113
44	0.5	0	0	-5.8	22	0.129	0.131	0.131	0.133
44	0.5	0	0	-1.9	22	0.147	0.147	0.147	0.155
44	0.5	0	0	1.9	22	0.167	0.165	0.164	0.179
44	0.5	0	0	5.8	22	0.190	0.183	0.182	0.206
44	0.5	0	0	9.6	22	0.216	0.201	0.200	0.235
44	0.5	0	0	13.5	22	0.246	0.219	0.218	0.268
44	0.5	0	0	17.3	22	0.280	0.236	0.236	0.304
44	0.5	0	0	21.2	22	0.319	0.253	0.252	0.346
44	0.5	0	0	25.0	22	0.363	0.269	0.268	0.393

Table J.8
Influence of Wall Angle on Passive Earth Pressure Coefficient

ϕ'_d (deg)	δ'/ϕ'	β/ϕ'_d	β (deg)	θ (deg)	δ'_d (deg)	K_p Powrie (LB)	K_p Numerical (LB)	K_p Numerical (UB)	K_p Coulomb (UB)
30	0.5	0	0	-25.0	15	7.10	7.55	7.58	19.2 **
30	0.5	0	0	-21.2	15	6.57	6.91	6.93	14.0 **
30	0.5	0	0	-17.3	15	6.08	6.35	6.37	10.8 **
30	0.5	0	0	-13.5	15	5.63	5.84	5.86	8.68 **
30	0.5	0	0	-9.6	15	5.21	5.39	5.40	7.19 **
30	0.5	0	0	-5.8	15	4.82	4.99	5.00	6.11 **
30	0.5	0	0	-1.9	15	4.46	4.62	4.63	5.31 **
30	0.5	0	0	1.9	15	4.13	4.29	4.30	4.69
30	0.5	0	0	5.8	15	3.82	4.00	4.00	4.21
30	0.5	0	0	9.6	15	3.53	3.74	3.74	3.84
30	0.5	0	0	13.5	15	3.27	3.50	3.50	3.54
30	0.5	0	0	17.3	15	3.03	3.28	3.29	3.30
30	0.5	0	0	21.2	15	2.80	3.09	3.09	3.11
30	0.5	0	0	25.0	15	2.59	2.92	2.92	2.96
44	0.5	0	0	-25.0	22	26.78	32.8	33.2	9076 **
44	0.5	0	0	-21.2	22	23.53	28.1	28.4	1146 **
44	0.5	0	0	-17.3	22	20.67	24.3	24.5	212 **
44	0.5	0	0	-13.5	22	18.16	21.0	21.1	87.6 **
44	0.5	0	0	-9.6	22	15.95	18.1	18.2	48.3 **
44	0.5	0	0	-5.8	22	14.01	15.7	15.8	31.0 **
44	0.5	0	0	-1.9	22	12.31	13.7	13.8	21.8 **
44	0.5	0	0	1.9	22	10.82	12.0	12.0	16.3
44	0.5	0	0	5.8	22	9.50	10.5	10.5	12.8
44	0.5	0	0	9.6	22	8.35	9.29	9.31	10.5
44	0.5	0	0	13.5	22	7.33	8.23	8.25	8.79
44	0.5	0	0	17.3	22	6.44	7.34	7.35	7.56
44	0.5	0	0	21.2	22	5.66	6.58	6.58	6.63
44	0.5	0	0	25.0	22	4.97	5.91	5.91	5.93

** For information only, restricted from use in analysis, $\delta'/\phi' > 0.5$ and/or positive β and/or negative θ.

J.8. Discussion and Recommendations.

J.8.1. There are many factors influencing earth pressure coefficients, which can lead to relatively involved design equations. These design equations are based on differing assumptions and may not be applicable for certain situations. The results in this appendix provide a designer with tabulated values of earth-pressure coefficients for a wider range of conditions than are generally available. These tabulated values can be used to validate spreadsheets and numerical models or used directly in design calculations in some cases. Figures illustrate the range of available solutions as compared to optimized numerical results. Differences between upper bound and lower bound solutions are indicative of model uncertainty.

J.8.2. Results further support the limitations on the use of typical solutions for earth pressure coefficients outlined in Chapter 6 and section J.2.

J.8.3. A lower bound design equation is presented that is more consistent with optimized numerical solutions than the Coulomb equation, for a full range of ϕ', δ'/ϕ', β, and θ. The lower bound equation can be used in design directly for all combinations of ϕ', δ'/ϕ', β, and θ. It can also be used to check the Coulomb equations, log spiral tables, or numerical results.

J.8.4. It can also be seen from data in Table J.2 and Table J.4, that the logspiral upper bound solution can overestimate K_p based on optimized numerical solutions by more than 20 percent for $\phi' > 36^o$ and δ'/ϕ' of unity. For δ'/ϕ' of 0.5, logspiral upper bound solution can overestimate K_p based on optimized numerical solutions by more than 20 percent for $\phi' > 46^o$. If performing assessment of existing walls using high values of ϕ' and δ'/ϕ', the implications of earth pressure coefficient method on analysis results should be considered.

Appendix K
Full Numeric Analysis Commentary and Case Histories

K.1. Nonlinear Shear Modulus and Net Displacement of Walls.

K.1.1. Selection of operation shear modulus for calculation of deformations of walls during excavations or flood loading is a difficult task. Developments in modeling of nonlinear stiffness from small strains is of paramount importance and has been recognized and used extensively in USACE projects (see Duncan & Chang, 1970). Three main issues arise if not using models that account for nonlinear stiffness (i) calculated deformations are more sensitive to domain size (see Potts & Zdravković, 2001b); (ii) heave is calculated adjacent to a wall after an excavation, but not observed in field measurements (see Simpson et al., 1979; Jardine et al., 1986); and (iii) translation of the wall results in higher horizontal displacements than expected (Pace et al., 2012).

K.1.2. Accounting for nonlinear stiffness response is key to reliable displacement. Until a modeler has sufficient experience using advanced constitutive models that incorporate nonlinear stiffness, analyses results based on models that use nonlinear stiffness should be compared to results based on models with the same geometry that use a standard linear elasto-plastic Mohr-Coulomb constitutive model as part of the validation process.

K.1.3. Figure K.2 presents results of flood wall loading using three different soil models: (i) a standard bilinear Mohr-Coulomb Model; (ii) a Mohr-Coulomb model with three times the expected soil stiffness; and (iii) the more sophisticated Hardening Soil (HS) model. The wall was embedded 30 feet into the ground and expected to see flood loads up to 9 feet. The mesh was 800 ft. wide and 100 ft. deep, with an enlarged section of the mesh in the area of the flood wall shown in Figure K.1a.

K.1.4. The profile of horizontal displacements of the I-wall with depth are compared in Figure K.2b. The main points that can be inferred are: (i) when using the standard Mohr-Coulomb model, excessive horizontal displacements in the free field overestimate translation of the wall; and (ii) increasing Mohr-Coulomb stiffness by three times to an appropriate unload-reload value, or smaller strain stiffness, minimizes translations, however, also tends to underpredict wall rotations as compared to the more representative HS model.

K.1.5. If the analysis is not concerned with assessing vertical settlements around a wall or ground displacements that effect adjacent structures, a Mohr-Coulomb model may be sufficient for analysis of factor of safety against collapse and wall displacements that result in bending moments within a sheet pile.

K.1.6. When using a linear elasto-plastic Mohr-Coulomb soil model in a full numerical analysis, the net displacement (see Chapter 9) may be discussed, rather than the total displacement of the wall. The net displacement is included in Figure K.2b as “MC Model, Tip

Disp. Removed." Some tip displacement due to translation still remains in this case (0.033 ft., or 0.4 in., or 10 mm), as the tip displacement was defined based on results of the nonlinear HS soil model, and judgment is required to evaluate the net displacement. The displacement that can be subtracted from the wall translation to assess the net displacement should be the horizontal soil movement on the flood, or retained, side of the wall near the tip of the wall, but outside of the failure mechanism. The failure mechanism can be identified through contours of shear strain.

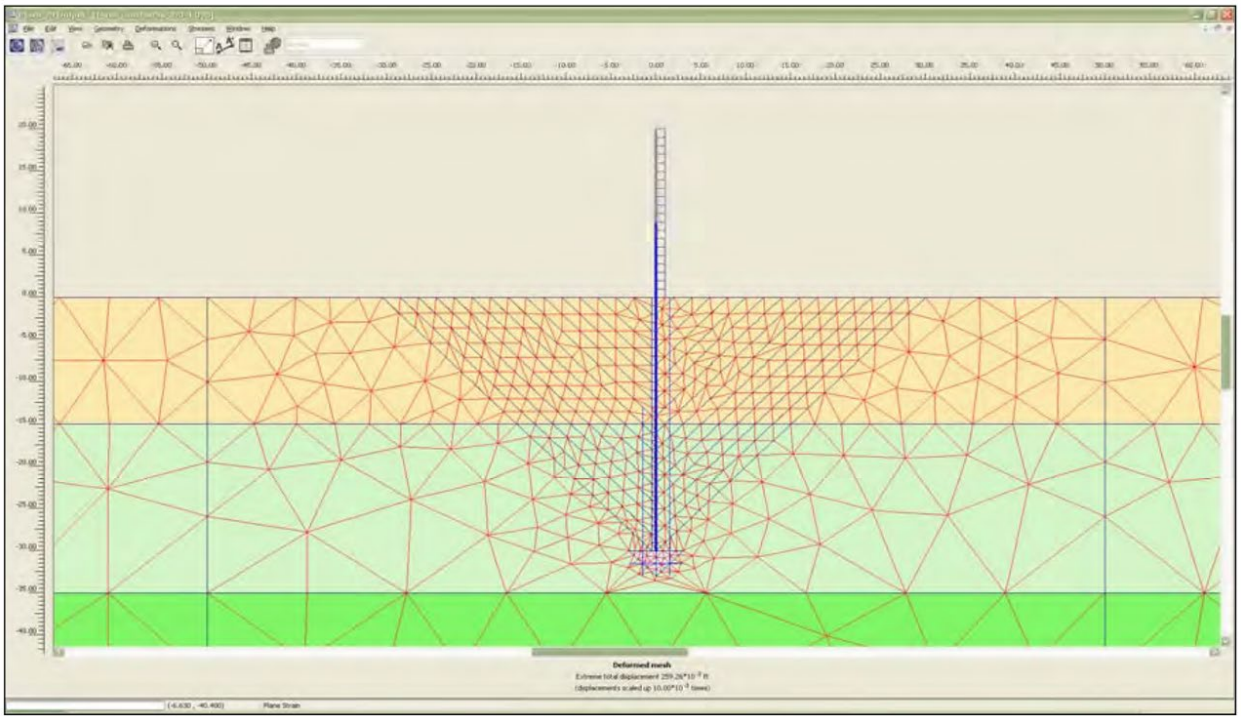

Figure K.1. (a) FEM Mesh for Flood Loading of I-Wall Problem

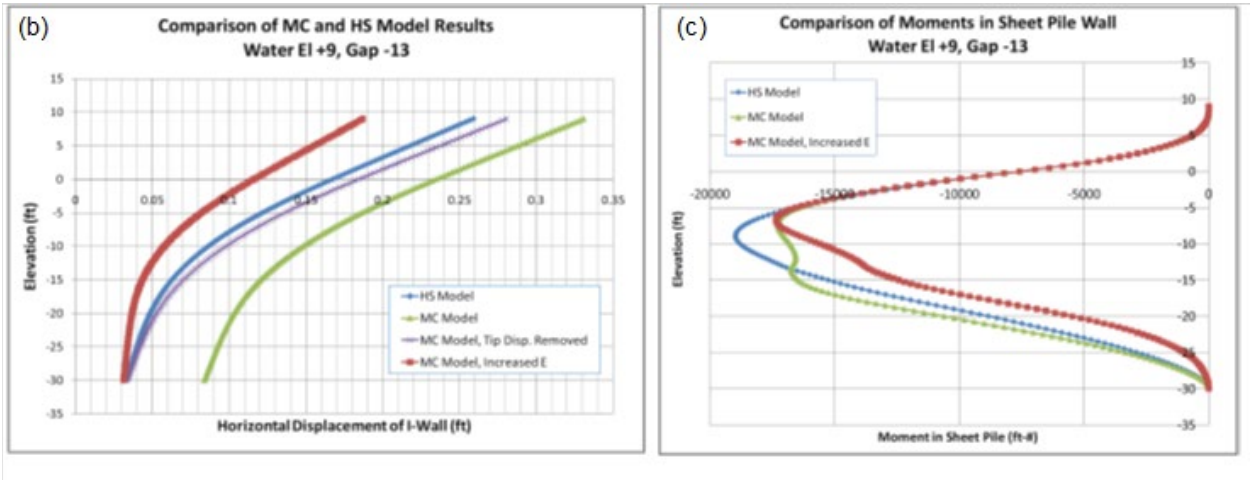

Figure K.2. (b) Variation in Horizontal I-Wall Displacement with Elevation for Analysis Using Various Soil Models; and (c) Variation in Bending Moment in Wall as a Function of Soil Model Used (Pace et al., 2012)

K.2. Yield Surfaces and Plastic Potential.

K.2.1. For a general 3D soil element, there are nine components of stress, composed of three normal (σ) and six shear (τ) stresses. Since three of those components of stress are symmetric ($\tau_{xy} = \tau_{yx}$, $\tau_{yz} = \tau_{zy}$, $\tau_{zx} = \tau_{xz}$), discussions are typically based on six components of stress.

$$(\sigma_{xx}, \sigma_{yy}, \sigma_{zz}, \tau_{xy}, \tau_{yz}, \tau_{zx}) \quad \text{(Equation K.1)}$$

K.2.2. Assessment of displacements are based on strains within a soil element. As with stresses, there are three components of normal (ε) strains and three components of shear (γ) strains.

$$(\varepsilon_{xx}, \varepsilon_{yy}, \varepsilon_{zz}, \gamma_{xy}, \gamma_{yz}, \gamma_{zx}) \quad \text{(Equation K.2)}$$

K.2.3. For two-dimensional plane strain analyses, the minor component of strain is zero. This leads to four components of stress, and three components of strain.

$$(\sigma_{xx}, \sigma_{yy}, \sigma_{zz}, \tau_{xy}, 0, 0) \quad \text{(Equation K.3)}$$

$$(\varepsilon_{xx}, \varepsilon_{yy}, 0, \gamma_{xy}, 0, 0) \quad \text{(Equation K.4)}$$

K.2.4. The volumetric strain (ε_v) is the sum of the three normal strain components, ε_{xx}, ε_{yy}, and ε_{zz}.

K.2.5. Full numeric analysis, as opposed to conventional geotechnical analysis, uses the typical sign conventions from mechanics, where stresses and strains are negative in compression and positive in tension. This leads to the principal normal stresses organized as:

$$\sigma_1 \le \sigma_2 \le \sigma_3 \quad \text{(Equation K.5)}$$

$$\varepsilon_1 \le \varepsilon_2 \le \varepsilon_3 \quad \text{(Equation K.6)}$$

K.2.6. Effective stresses are defined in the conventional manner ($\sigma' = \sigma - u$), since pore fluid pressure (u) has the same sign convention with negative being in compression.

K.2.7. It is also common to use the stress invariants p' and q as the mean effective stress and equivalent shear stress, respectively, within constitutive models.

$$p' = \frac{\sigma'_{xx} + \sigma'_{yy} + \sigma'_{zz}}{3} \quad \text{(Equation K.7)}$$

$$q = \sqrt{\frac{1}{2}\left(\sigma_{xx} - \sigma_{yy}\right)^2 + \frac{1}{2}\left(\sigma_{yy} - \sigma_{zz}\right)^2 + \frac{1}{2}(\sigma_{zz} - \sigma_{xx})^2 + 3\left(\tau^2{}_{xy} + \tau^2{}_{yz} + \tau^2{}_{zx}\right)} \qquad \text{(Equation K.8)}$$

K.2.8. These stress invariants involve three to six components of stress from (Equation K.1, as compared to the two components used in traditional geotechnical analysis. Depending upon the constitutive soil model, the stress invariants may also differ from those presented in Equation K.7 and Equation K.8. The software user's manuals should also be consulted when evaluating the details of a constitutive model.

K.2.9. The following section presents discussion, along with a series of graphs, to illustrate typical forms of yield surfaces and plastic potential functions, as well as normal vectors to represent relative plastic strains. The sequence of the discussion and figures is intended as a transition from familiar formats of plotting data in 2D shear and effective normal stress space (Mohr diagram of stress) with linear failure envelopes, to more complicated presentation in 3D principal stress space and combined Mohr stress and strain space. Available technology involved with full numeric analysis can sometimes overwhelm the conceptual understanding of the material behavior and structural response, and this section is intended to provide figures which can aid in verifying that conceptual understanding.

K.2.10. Ultimately, the output from commercial full numeric analysis software packages will typically include principal stresses, strains, and stress invariants. The output from a numerical analysis can then be plotted in similar formats to those presented in this section as part of the validation process if there is a question on limit loads or evolution of elastic and plastic deformations throughout the modeled construction process.

K.2.11. The yield surface defines when plastic strains are developed, and the plastic potential defines the ratio of volumetric to shear (or deviatoric) strains for an increment of loading. The plastic potential can be thought of as having a similar function for plastic strains as the Poisson ratio has for elastic strains.

K.2.12. Common yield surfaces are the Tresca yield surface for undrained loading with constant strength ($\tau_f = c = s_u$), and the Mohr-Coulomb yield surface for drained loading where strength changes with changes in effective normal stress ($\tau_f = c' + \sigma'_n \cdot \tan\phi'$). The Tresca yield surface is the Mohr-Coulomb yield surface with $\phi = 0$. Mohr-Coulomb and Tresca strength parameters can be defined using conventional soil tests described in Chapter 5.

K.2.13. Differences in numerical results may arise from using differing constitutive models. Plotting stresses for a soil element in the π-plane, or deviatoric plane, can help identify which elements are at yield and those that should be generating plastic strains. Figures K.3 and K.4 compare 2D plotting of the Tresca and Mohr-Coulomb yield surfaces, respectively, in standard 2D stress invariant space as compared to a plane in 3D principal stress space. Specific definitions of yield surfaces are contained in Potts & Zdravkovic (2001a), and software user's manuals.

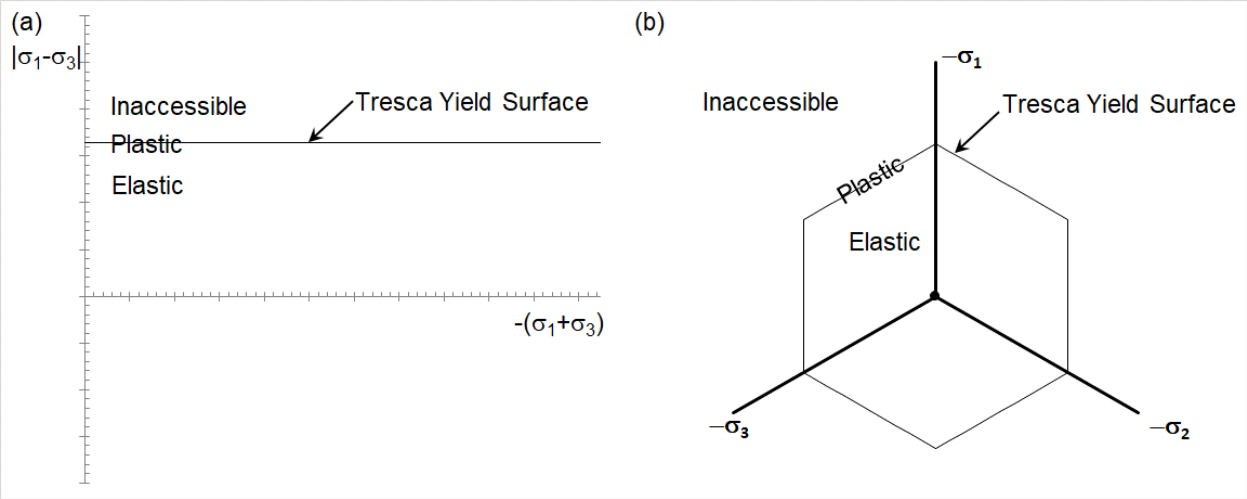

Figure K.3. Tresca Yield Surface Plotting Using (a) Two Stress Invariants; and (b) Three Principal Stresses in the π-Plane

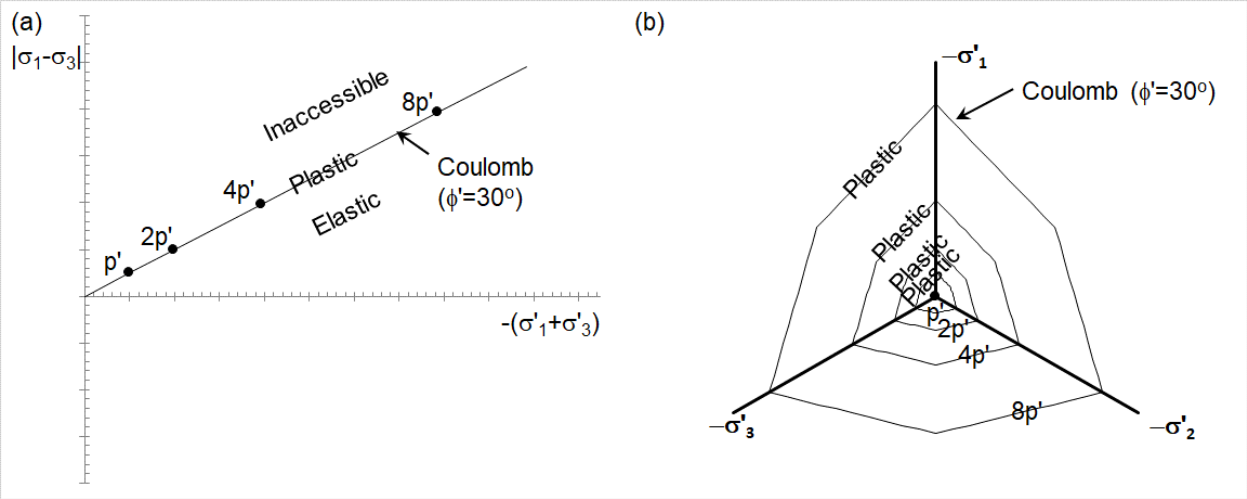

Figure K.4. Coulomb Yield Surface Plotting Using (a) Two Stress Invariants; and (b) Three Principal Stresses in the π-Plane

K.2.14. The purpose of Figures K.3 and K.4 is to assist the reader in a transition from thinking about yield surfaces in conventional two-dimensional space based on stress invariants, to 3D space in the π-plane. The Tresca yield surface has a constant strength and a single yield surface in the π-plane. The Coulomb failure envelope has strength that increases with effective stress, and yield surfaces that increases as mean effective stress (p') increases.

K.2.15. Plotting data within the π-plane is also useful to understand the influence of stress path, relative values of σ'_1, σ'_2, and σ'_3 that result from loading, on failure and generation of plastic strains. Figure K.5 compares Tresca, Von Mises/Drucker Prager (at a selected value of p'), and Coulomb (for $\phi' = 30$ at a selected value of p') yield surfaces in the π-plane. The Von

Mises (cylinder with constant strength) and Drucker Prager (cone with strength increases with effective stress) are both circular yield surfaces in the π-plane at a constant p' and are grouped together for this discussion.

K.2.16. Figure K.5 highlights potential differences in yield as a function of stress path. The three stress paths shown are triaxial compression, triaxial extension, and plane strain. The selected yield surface will influence factors of safety from numerical models. Constitutive models should be calibrated to the appropriate modes of shearing.

K.2.17. In Figure K.5, the yield surfaces were matched for loading typical of plane strain conditions, which is appropriate for many 2D analyses. If a plane strain strength test were simulated, the same results would be reproduced numerically using all three yield surfaces. For triaxial extension, the Von Mises/Drucker Prager and Coulomb yield surface would produce similar results, however, the test modeled using a Tresca yield surface would produce slightly higher strengths. If simulating a triaxial compression test, the Coulomb soil model would produce strengths 45 percent higher than that using a Von Mises/Drucker Prager soil model calibrated to plane strain strength at the appropriate value of p'.

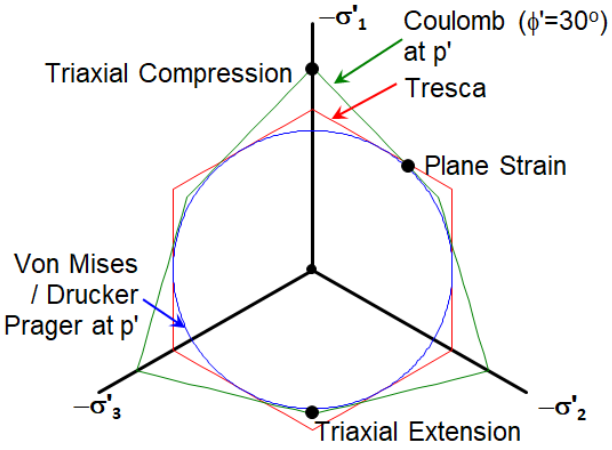

Figure K.5. Comparison of Stress State for Triaxial Compression, Triaxial Extension, and Plane Strain Loading of a Soil Element at a Constant Value of p' for Various Yield Surfaces

K.2.18. Simple elasto-plastic constitutive models (Tresca, Von Mises, Mohr-Coulomb, and Drucker Prager) create a regular or irregular hexagonal or circular cylinder or cone in 3D principal stress space. It may be desirable to limit the size of these cylinders or cones based on a maximum mean effective (yield) stress such that exceeding that yield stress then allows for development of plastic strains as mean effective stress increases. These limitations are referred to as caps on the yield surface, or bounding surfaces, with the most commonly known cap models being Cam Clay or Modified Cam Clay (Wood, 1990).

K.2.19. Cap surfaces in 2D stress invariant and 3D principal stress space for the Modified Cam Clay Yield surface are shown in Figure K.6. When the cap surface is reached due to a combination of mean effective stress (p') and shear stress (q), the cap expands (hardening, increase in strength) or contracts (softening, decreases in strength). The size of the cap yield surface is controlled by a hardening parameter. For this model, a critical state line (CSL) is used to separate hardening and softening behavior. Having a cap yield surface extended above a CSL allows for peak stress ratios at failure (peak friction angles) to be in excess of those when critical state strength is reached at large shear strains.

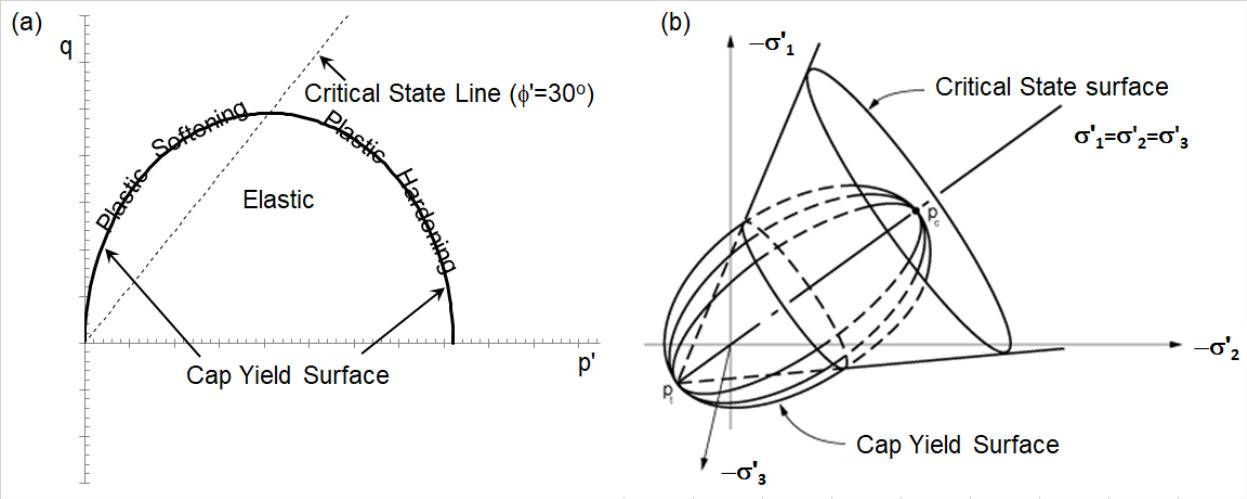

Figure K.6. Modified Cam Clay Cap Yield Surface Plotting Using (a) Two Stress Invariants; and (b) Three Principal Stresses

K.2.20. A numerical model may be globally stable, even if portions of the model have yielded. The accumulation of plastic shear and volumetric displacements due to that local yielding needs to be defined. In addition to the yield surface, elasto-plastic models require a plastic potential, also referred to as a flow rule. The plastic potential gives the ratio of plastic volumetric strains to plastic shear strains due to changes in mean and shear stresses as applied to the yielding zones. When defining the plastic potential within Mohr-Coulomb and Tresca constitutive relationships, the dilation angle (ψ) is typically used. The change in size of a soil element (volumetric strain) due to the change in shape of a soil element (shearing) is indicated by the dilation angle (ψ').

$$tan\psi = -\frac{\delta\varepsilon_v{}^p}{\delta\gamma^p} \qquad \text{(Equation 16.24)}$$

$$sin\psi = \frac{\delta\varepsilon_1{}^p + \delta\varepsilon_3{}^p}{\delta\varepsilon_1{}^p - \delta\varepsilon_3{}^p} \qquad \text{(Equation 16.25)}$$

K.2.21. When first thinking about a plastic potential, a second set of axes involving plastic shear strain and plastic volumetric strain, known as the Mohr circle of strain, can be added to a standard Mohr diagram of shear stress vs. normal effective stress. The stress state and the strain

vector are related by plotting the strain vector using a stress point as a floating origin of the strain diagram. The plastic strain rate vector is normal to the plastic potential function.

K.2.22. For perfect plasticity, the yield surface and plastic potential function are equal, which is known as associated flow. The plastic potential (vector) is shown on a combined figure of principal stress and strain space for associated flow conditions in Figure K.7. For undrained loading with $\phi = 0$, it is reasonable to assume that the dilation angle is zero, implying a constant volume condition. For assessment of drained loading with $\phi > 0$, the assumption of associated flow is less realistic and numerical models will typically overpredict plastic volumetric shear strains (dilation).

K.2.23. Measured soil behavior based on direct shear or triaxial tests show that the dilation angle is typically less than the friction angle for drained loading. This behavior can be modeled numerically using a constitutive model with a plastic potential that is not equal to the yield surface, known as non-associated flow ($\phi' \neq \psi'$). Differences in the plastic potential for associated and non-associated conditions are shown on combined principal stress space/principal strain space in Figure K.8. While these differences appear small, they may have implications on collapse loads and deformations prior to collapse.

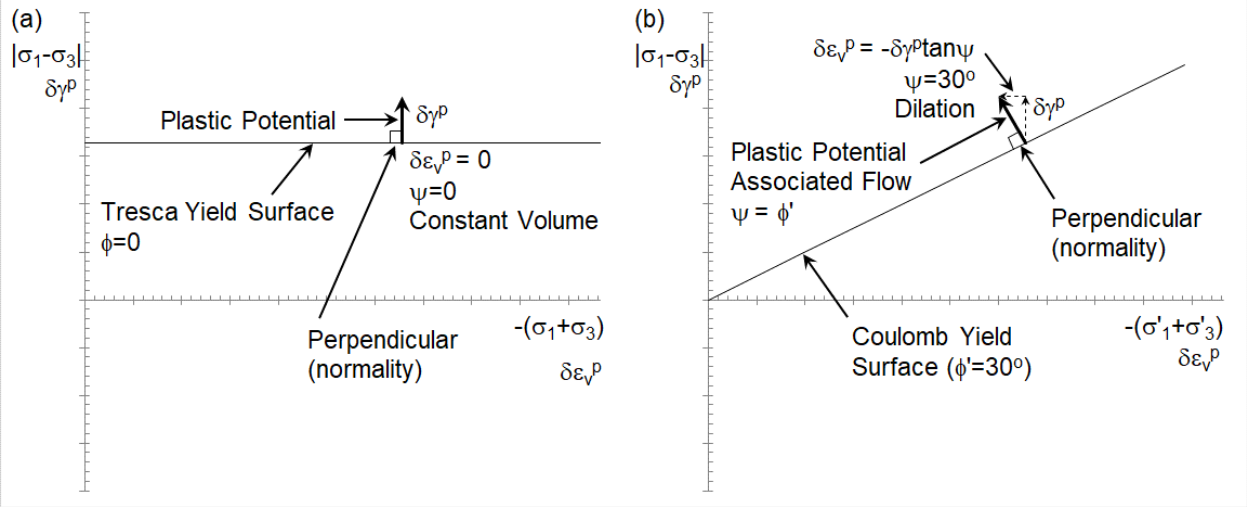

Figure K.7. Illustration of Plastic Potential Assuming Perfect Plasticity (associated flow) on Combined Principal Stress Space/Principal Strain Space for (a) Tresca ($\phi = 0$) and (b) Mohr-Coulomb Failure Surfaces

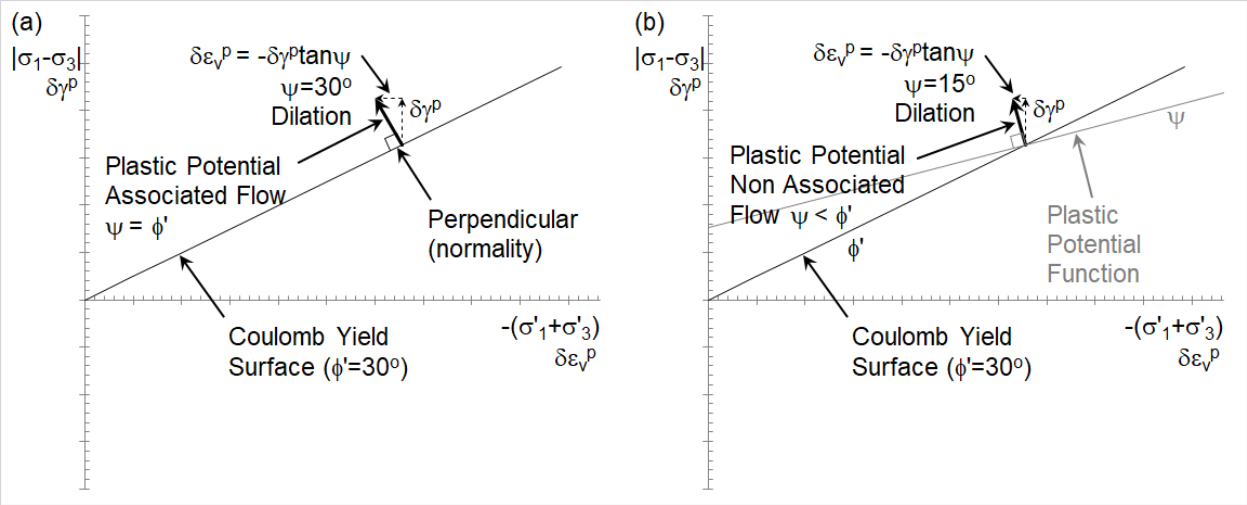

Figure K.8. Comparison of Plastic Potentials on Combined Principal Stress Space/Principal Strain Space for (a) Associated and (b) Non-Associated Flow

K.2.24. The influence of dilation angle on ultimate capacity calculated from analytical solutions (assuming associated flow) as compared to numerical analyses that better account for drained soil behavior with $\psi' < \varphi'$, depends on the level of confinement in the problem (Houlsby 1991, Yu et al., 1998). For a low-confinement problem, such as slope stability, the difference in drained factor of safety based on associated and non-associated flow soil models is generally indistinguishable for critical slip surfaces. For higher confinement, shallow foundation, and plate anchor uplift problems, the assumption of associated flow may overpredict capacity by 100 percent or more.

K.2.25. Many analytical solutions, such as earth pressure coefficients and shallow foundation bearing capacity, are based on limit analysis, which uses the assumption of associated flow. When validating full numeric analysis through comparison to typical analytical solutions, it is usually appropriate to use $\phi' = \psi'$ in calculations. When performing analysis to best assess pre-failure deformations, it is typically appropriate to use a soil model with $\psi' < \phi'$.

K.2.26. Limitations of perfect plasticity and associated flow within the Mohr-Coulomb failure criterion have been further explored through hardening theories of plasticity, as previously discussed in terms of cap yield surfaces and illustrated in Figure K.9. Adding plastic potential vectors normal to the yield surface on a combined Mohr graph of stress and strain (Figure K.9a) results in three different conditions: (i) dilation and softening when on the yield surface and the stress ratio (q/p') is greater than the critical state line; (ii) constant volume shearing at stress states where the yield surface intersects the CSL; and (iii) contraction and hardening when on the yield surface at stress ratios below the CSL. The plastic potential is normal to the yield surface meeting the criteria of associated flow, however, a friction angle inferred from the peak stress ratio will not be equal to the dilation angle.

K.2.27. Plastic potential functions may take similar shapes to cap yield surfaces, however, may not be equal to the yield surface. This results in models with non-associated flow, such as the hardening soil (HS) model (Schanz et al., 1999) or enhanced Mohr-Coulomb (EMC)-based models (see Doherty & Muir Wood, 2013). These hardening models also tend to include a third zone of behavior (in addition to elastic and plastic), where both elastic and plastic strains are generated within a single element.

K.2.28. Within these advanced constitutive models, additional evolving yield surfaces exist within the peak yield surface, the plastic potential formulation differs from the yield surface (non-associated flow), and the plastic potential function evolves with yielding. Once stress ratios associated with an initial elastic yield surface are exceeded, both elastic and plastic strains are generated until the yield surface associated with peak strength is reached, at which point only plastic strains are generated within the element at failure. The relationship between plastic shear and volumetric strains evolve through initial contraction to dilation, as illustrated in Figure K.9b.

K.2.29. Constitutive models can become quite involved. Analysts need to validate models through simulation of element tests and subset analyses, as well as reviews of case histories. Implementation of an instrumentation programs to check assumptions should be considered for larger projects.

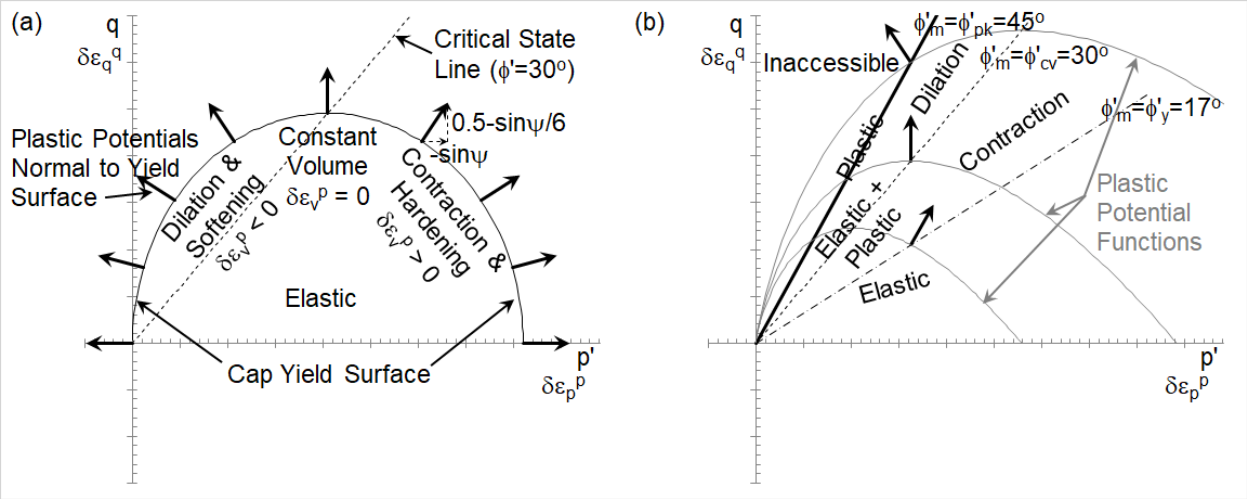

Figure K.9. Yield Surface and Plastic Potentials for (a) Modified Cam Clay Soil Model with Associated Plastic Potential; and (b) Hardening Type Mohr-Coulomb Soil Models with Multiple Yield Surfaces and Non-Associated Plastic Potential

K.3. Well-Documented Case Histories.

K.3.1. Clough & Duncan (1969) performed one of the earliest USACE studies using full numeric analysis in their analysis of two reinforced concrete U-frame locks at Port Allen and Old River. These locks had extensive instrumentation, which was originally thought to be poorly performing. Analysis showed that just initiating gravity for a complete model was insufficient to

create a model that represented the interaction between the soil and the locks. To model instrumentation data, the analysis needed to incorporate the nonlinear stress-strain response of the soil and interface elements on the concrete lock walls, as well as modeling the construction history as closely as possible.

K.3.2. Another nonlinear SSI analysis of a U-frame lock by Ebeling et al. (1993) investigated the potential lock performance with the construction of a reinforced soil retaining wall adjacent to the riverside stem wall and separated by a gap. The FE model was first validated against instrumentation data, followed by construction of a proposed reinforced soil retaining wall riverside of the stem wall. Subsequent analyses allowed for the understanding of the complex interactions among the reinforced soil wall, the U-frame lock, and its soil foundation to various flood loadings with sediment.

K.3.3. Well-documented case histories analyzed using full numeric methods can provide some level of validation. However, site investigation data and advanced laboratory tests results may not be available in sufficient quantity as part of the available reports. Therefore, a true validation often cannot be performed. Well-documented case histories further highlight the interaction between field instrumentation and the numerical modeling process. Review of well-documented cases histories is a useful starting point for identifying techniques used for model verification and validation, as well as planning and implementing a useful instrumentation program. Case histories with full numeric analysis that are related to USACE flood wall and retaining structure projects are summarized in Table K.1.

Table K.1
Well-Documented Case Histories Related to Full Numeric Analysis of USACE Floodwalls and Other Hydraulic Retaining Walls

Analysis Method			Analysis Type			Description
FEM	FDM	FELA	SSI	SRF	Seepage	
X			X			Finite element analysis of Port Allen and Old River Locks (Clough & Duncan 1969)
X			X			Stresses and movements in Oroville Dam (Kulhawy et al., 1969, Kulhawy & Duncan 1972)
X					X	Applications of the finite element seepage analysis USACE program CSEEP (X8202) (Knowles 1992)
X			X			Analysis of a field load test on E-99 sheet pile wall (Leavell et al., 1989, Pace et al., 2012, Chapter 3, Appendixes E, F, G, and H)
X			X			Finite element study of tieback wall for Bonneville Navigation Lock (Mosher & Knowles 1990)

Analysis Method			Analysis Type			Description
FEM	FDM	FELA	SSI	SRF	Seepage	
X			X			Structural evaluation of Eisenhower and Snell Locks, Saint Lawrence Seaway, Massena, New York (Mosher et al., 1991)
X			X			Reinforced earth wall in sand experiment (Ebeling et al., 1991a,b)
X			X			Soil-structure interaction study of Red River Lock and Dam No. 1 subjected to sediment loading (Ebeling et al., 1993)
X			X			Case histories of earth pressure-induced cracking of locks (Ebeling et al., 1996, ITL-96-9)
X			X			Stability of existing concrete gravity structures founded on rock (Ebeling et al., 1997, REMR-CS-54)
X			X			Soil-Structure Foundation Interaction analysis of new roller-compacted concrete north lock wall at McAlpine Locks (Ebeling & Wahl 1997, ITL-97-5)
	X		X			Embankment stabilization using cement columns (Navin 2005)
X			X	X		Soil-Structure Interaction analysis of the floodwall at 17th Street (IPET 2007, Volume 5 Appendix 6)
	X		X	X	X	FLAC numerical analyses of floodwalls of New Orleans flood protection system (IPET 2007, Volume 5 Appendix 19)
		X				Evaluation and prediction of 17th Street Canal I-wall stability using numerical limit analysis (Yuan & Whittle 2013)
X					X	Analysis of the London Avenue Canal I-wall Breaches (IPET 2007, Volume 5 Appendix 8)
X			X	X	X	Soil-Structure Interaction analysis of the floodwalls at London Avenue canal (IPET 2007, Volume 5 Appendix 9)
X					X	Analysis of performance of the Orleans Canal I-walls (IPET 2007, Volume 5 Appendix 10)
X					X	Finite element seepage study – Seepage analysis for foundation breaches (IPET 2007, Volume 5 Appendix 17)
X			X			3D behavior of retaining wall systems (Abraham 2007)

Analysis Method			Analysis Type			Description
FEM	FDM	FELA	SSI	SRF	Seepage	
	X		X			Levee and floodwall stabilization using deep-mixed shear walls (Adams 2011)
X			X			Inner Harbor Navigation Canal Lake Borgne Barrier Floodwall (Dong & Schwanz 2011)
X				X		Inner Harbor Navigation Canal Lake Borgne Barrier Rock Berm (Dong et al., 2012)
	X		X			Numerical studies of I-shaped levee flood wall at St. Paul, Minnesota site (Hu et al., 2014)
	X		X			Pile supported T-walls on soft ground (Reeb 2016)