Procurement Procedures

Materials and Specifications

Sign Maintenance Procedures

Typography Reference

Reference Material

Reproduction Materials

The Corps Sign Standards Program is a system of signs with program management procedures developed to help project managers plan, install and maintain the highest standard of visual communications for our projects. When a sign program is professionally planned, implemented and maintained, it becomes a more effective system.

Broken and noticeably weathered signs dilute the effect of the other signs in the system. Where vandalism is prevalent, the presence of one vandalized sign acts as an inducement for other incidents of vandalism to occur.

Effective sign maintenance is a necessary component for the Sign Standards Program implementation and management. If maintained correctly, project signs will last up to twice as long, thus reducing overall program costs substantially and protecting the Corps' overall investment in the system. Furthermore, each sign is placed for a specific purpose. When a sign is missing or damaged, there is an increased potential for an accident, thus creating a liability for the Corps that may have been prevented.

The establishment of simple management procedures as described in this section, will help insure that broken, damaged or missing signs are identified, repaired or replaced in a timely manner and that preventative maintenance is performed on a regular basis. These procedures include: inspection cycles, a mechanism to efficiently process documented problems, and the development of trained maintenance personnel who are equipped to correctly install, repair and replace signs.

Sign maintenance programs must establish high standards to assure that a sign is in good repair, that the sign is legible, and is removed when no longer needed. Clean, legible and properly mounted signs command the respect of all visitors. As a result, the total sign system is only as good as the maintenance provided.

How To Use This Section

This section is a guide to good sign maintenance practices. It presents methods for inspection, record keeping, repairing, refurbishing, cleaning and replacing project signs. The front of the section describes maintenance procedures, including preparation of maintenance surveys and work orders. The back of the section outlines specific maintenance tasks and, where appropriate, some of the maintenance methods are shown in step-by-step illustrations. A list of recommended tools, supplies, and suggested documentation for inspection and maintenance records are included. Using this section as a guideline, each project will establish procedures for inspection and maintenance of signs that reflect the needs of the project.

With adequate training and the adoption of standard maintenance procedures, project management will become more cost efficient and will increase the effectiveness of resource deployment.

The Project Sign Program Manager, aided by the project maintenance personnel and rangers, should inspect all signs on a regularly scheduled basis. They should be knowledgeable of both the Corps Sign Standards and the particular sign requirements of the project.

Good maintenance practice suggests that, at minimum, all signs on a project should be inspected both before the recreation season begins and after it is over. Locations that experience high incidences of vandalism, or where weather conditions are extreme, may require scheduled inspections on a more frequent basis. Locations with critical safety signing should be inspected several times a year.

Materials Required For Survey

For inspection, use the records, documentation, and report worksheets listed below.

a. Site Plan Drawing with the Project Sign Plan (see Section 3, page 3.4).

b. Copy of the Project Sign Inventory on computer printout or the Sign Schedule Worksheet (see Section 3, page 3.5).

c. Copies of the Sign Maintenance Field Report Worksheet printed and assembled in tablet form (see Appendix C, page C.3).

The logistics of sign inspections in the field can be cumbersome. The surveyor must juggle the site plan, sign schedule or inventory list, and the reporting worksheets, while making inspections and recording existing conditions. Because this procedure requires cross-referencing each of the various plans and records, many Sign Program Managers put their site plans on small section drawings or reduced prints to help make the field reviews more efficient and manageable.

Inspection Criteria

Each sign must be carefully inspected to verify its condition. Glance inspections from a vehicle are not adequate. Once it is verified that the sign is in its proper location, check the overall condition. Record missing or damaged signs following the procedures described on page C.3.

If a sign is not in compliance, check to see if it is planned for replacement within the scheduled phase-in period for the program. A sign inspection will be helpful in managing your sign plan. It can be used to evaluate whether each respective sign is still needed, if the sign is appropriate for the location and to update your project sign plan.

The following is a list of review items for use during sign inspections.

Inventory
- Cross check location drawing with inventory

Mounting
- Uprights are straight and plumb
- Posts not loose or rotated
- Posts are not damaged
- Wall mountings are secure
- Dimensional lumber and redwood sign posts stained and sealed

Hardware and Joints
- Bolts and attachments are secure

Sign Panel: Substrate
- Wood sign panel is painted or stained and weather sealed
- Enameled HDO plywood panel edges are sealed
- Top of HDO plywood panels wrapped with edge sealing tape
- Edges of reflective sheeting are tight to panel

Sign Face
- Sign is legible and in good repair
- Letters are not missing or broken
- Color is bright and unfaded
- Panel is clean and free of stains or markings
- Surface is not crazed or lifting
- Seams on the front face are sealed
- Joints on backs of signs are sealed

General
- Note other damage from vandalism or normal deterioration

Compliance
- Verify that sign complies with Corps Sign Standards.

Repair Work Orders

Upon completion of the field inspection, the Sign Program Manager or Maintenance Supervisor should prepare a Sign Maintenance Repair/Replacement Work Order (see page C.14) for each sign requiring attention. This work should be scheduled with highest priority given to requirements of safety critical signs. As needed, replacement signs, posts and hardware will be pulled from inventory on the project or ordered to complete these Work Orders in a thorough, timely and efficient manner.

Daily Inspection

Because project rangers and maintenance personnel are out on the project on a daily basis, they will often notice a problem as it arises. It is recommended that they keep a tablet containing Sign Maintenance Field Report Worksheets in their vehicles to report a problem when it is noticed so that the repair can be made as soon as possible.

Sign Program Record Keeping

Record keeping is an important aspect of sign maintenance and program management. The sign maintenance records can be used to measure the cost effectiveness of signs, as well as how much maintenance is required.

The primary forms of documentation include the site plan showing the location of each sign and the project sign schedule or inventory. It is imperative that both of these documents be kept up-to-date. Similarly, a file of all field reports and repair work orders should be maintained for future reference.

In addition, use of the Corps of Engineers Sign Manager Software Program in lieu of manual record keeping will greatly reduce the time required to keep project records up to date.

Vandalism

The problem of vandalism cannot be overlooked in a sign maintenance program. Defacement and destruction of signs may occur on every project. Vandalism ranges from scribbles, gunshots and painting to outright theft. According to state highway department records, 3 to 9 percent of all signs in place are stolen every year. To combat vandalism, repair or replace damaged signs immediately. Vandal damage is infectious and can be thwarted by diligent attention to problem areas.

Materials and assembly methods specified in this manual were selected because they are generally vandal-resistant. For example: HDO plywood is more rigid than aluminum, less easily damaged by gun shots and the face hardware can be easily concealed using T-nuts mounted sub-surface. Counter-sunk socket head cap bolts are used in most assembles to conceal the bolt heads and make them more difficult to remove. On routed redwood signs, all hardware is concealed and most common damage to the signs (such as gunshots) can be easily repaired.

On a regularly scheduled basis, routinely maintain all signs on the project. Most general maintenance repairs are easily performed in the field and require no special equipment. If this general maintenance cycle is completed prior to the scheduled inspection, most maintenance requirements will be taken care of, therefore eliminating the need for a Field Report and/or Work Orders for routine maintenance. The majority of these items are common sense preventive maintenance. If performed properly and on a scheduled basis, this effort will go a long way to protecting the overall project investment in signs.

Try not to spend time and money repairing non-compliant signs or non-standard traffic control devices. Instead of repairing them, replace them with compliant signs that conform to the standards contained in this manual.

Make repairs in a professional manner. Careless sign maintenance can do more harm than good. This is most notable for re-painting and resealing signs. Make sure that all finishes are properly applied and that paint splatters and over-runs are cleaned up when they occur. Improper or sloppy maintenance can destroy a sign just as easily as vandalism or no maintenance at all.

General Maintenance Procedures

The following are general maintenance procedures for each of the various materials, coatings and graphic applications used on Corps signs. These include HDO plywood (HDO) and aluminum (ALU) signs with reflective sheeting sign faces and routed redwood (RRW) signs. Most every task described can be completed with common hand tools. To make these procedures easier, maintenance personnel should prepare a simple sign maintenance kit of tools and repair materials that can be easily transported to the site to help expedite routine maintenance operations.

First, determine if the sign is in satisfactory condition or should be repaired or replaced. This is usually a field judgment. More often than not, it is cheaper to replace a badly damaged or illegible sign than to attempt extensive repairs. Compare the repair and labor-hour costs with new sign cost and service life when deciding whether to repair or replace a sign. It is generally assumed that if the problem is too severe, the sign cannot be repaired in a cost efficient manner and should be replaced.

You may need to consult with manufacturers of the signs or sign materials to learn of the most efficient way to perform a specific repair or solve a maintenance problem not described in this section.

Grounds Maintenance

Tree branches, shrubs, weeds and brush around the mounting should be removed to insure that there are unobstructed sight lines to the sign and that it is clearly legible for the approaching viewer. Maintenance crews should be careful not to damage the sign posts during mowing or trimming.

Safety Practices in Field and Shop

Personnel safety is a prime concern in performing sign maintenance. Crew supervisors and members must be familiar with standard health and safety procedures to insure that field tasks are accomplished safely and efficiently.

Do not set out to maintain roadside signs without all the appropriate advance warning signs and devices needed to protect motorists and workers at each site. To protect sign crews and road users alike, follow these rules regarding clothing, vehicles and barricades.

1 Maintenance personnel must wear clothing as specified by the District Safety Officer for conspicuity and protection.

2 Equip maintenance vehicles with flashing lights and have a slow moving vehicle (inverted triangle SMV) sign properly displayed.

3 Erect barricades, flashers, cones and "Men Working" signs in work areas where roads are open to vehicle travel. Follow guidelines in Part VI; Work Zone Traffic Control, in the Traffic Control Devices Handbook.

Signs are to be clean and free of stains or markings to insure their legibility. This is particularly true of reflective signs, which must be dirt-free for maximum reflectivity. The following cleaning instructions are applicable for HDO plywood and aluminum signs with reflective sheeting sign faces.

Step 1 Flush sign surface with clean water to remove loose dirt.

Step 2 Wash sign with soft brush, rag or sponge. Use a mild, non-abrasive detergent that is chemically neutral and free of strong aromatic solvents or alcohols. A list of appropriate cleaners tested for engineering-grade sheeting, painted surfaces, and stained posts and panels is available from the respective material manufacturer. Wash from top down. Avoid abrading the surface with unnecessary scrubbing. Once the detergent has been applied, keep a steady stream of water flowing on the sign face to wash away dirt.

Step 3 Rinse entire sign face with clean water and allow to dry. If a sign is to be stained, painted, sealed or the reflective sheeting clear-coated, it must first be thoroughly dry.

Removing Difficult Materials on Retro-Reflective Sign Faces

Described below are special procedures for cleaning signs with stains or markings that are commonly difficult to remove.

Tar, Oil, Diesel Smut, Bituminous Material: Use a mild solvent such as mineral spirits. Then wash the surface with mild detergent and water. Rinse with clean water to remove any solvent residue.

Pollen and Fungus: Wash the surface with a 3 to 5 percent sodium hypochloride solution such as a commercial brand of bleach, followed by mild detergent and water. Rinse with clean water.

Lipstick and Crayon: For reflective sheeting with factory impregnated color, use a mild solvent such as mineral spirits to remove the material. Follow with detergent and water and clean water rinse. Because the solvent may also dissolve the legend on screen printed sign faces, test clean a small area before solvent washing the entire sign face.

Paint on Reflective Sheeting: It may be possible to remove paint sprayed onto a reflective sheeting sign face using a commercial paint remover designed for this purpose. The type of paint, length of exposure and type of remover used may affect the life of the sheeting. Spot test the specific remover on an old sign panel that has the same sheeting to make sure that the remover will not destroy the sign face. Following the cleaning procedure, the sign face may require an application of clear urethane coating available from sheeting manufacturers to restore the top surface and extend the life of the sign. Note: this method may not work for signs with screen printed signs because the legend will also be removed in the cleaning process.

Other Markings on Reflective Sheeting: It may be more appropriate to patch the damaged area of the sign (see page C.10) or replace it, if markings cannot be removed by the methods described above.

With proper care, your routed redwood signs can last for decades. Periodic cleaning can prolong the life of the finish, but eventually dirt and weathering will necessitate some heavier cleaning and/or refinishing of the surface.

Cleaning Redwood Sign Panels
The discoloring associated with redwood as it ages is a combination of surface dirt and mildew. Surface dirt is the accumulation of airborne particles which cling to rough surfaces and open pores in the wood, especially when wood has been dampened by rain or dew. This dirt builds up through time, and attracts another unsightly companion: mildew.

Mildew has the appearance of being a blackish surface dirt, but in reality is microscopic organisms living off the accumulated impurities on the wood. Sunlight is the biggest enemy of mildew, and may explain why signs placed in shady areas have more trouble with this.

There are ready-mixed solutions which will wash away surface dirt and kill existing mildew, bringing the redwood back to a new, reddish-brown color. Among the many products available, Easy-Off® and Tilex® mildew removers are widely available in supermarkets and are convenient pump bottles. Do not use oven cleaner - only mildew removers. X-14® also works well but seems to be harsher on the skin if contact occurs. Rubber gloves and glasses should be worn when handling any of these products.

Step 1 Spray the product on the weathered wood in generous quantities, and scrub with a soft scrub brush or stiff paint brush. The surface must stay wet for at least ten minutes, with continuous re-application of the mildewcide cleaner as it soaks in and tries to evaporate. Best results are obtained if the sign was dry to begin with, so there is no dilution of the cleaner by water on the surface.

Step 2 After ten or fifteen minutes, with occasional scrubbing, the sign should be thoroughly flooded (hosed, if possible) with clean water. Scrubbing while rinsing will get the chemical residue out of the wood grain, which may cause uneven streaking if left on the wood.

Step 3 Allow sign to dry completely before continuing the refinishing process. This may mean waiting several days in cool, damp weather. When surface feels dry, commence finishing.

Other Markings on Routed Redwood
Because of the porous nature of redwood, damage by paint and other markings on redwood sign panels could be increased by washing with a solvent. In such cases, it is recommended to sand away the marked or stained area using a fine grade (150 grit) sandpaper. When most of the problem has been removed, re-stain the entire sign panel as described on page C.9.

Instructions provided on this page were developed with the assistance of Southwood Corporation.

Sign Mounting
All mountings should be straight and plumb. Post mounted signs should not rotate in their bases or vibrate when subjected to strong winds.

Loose Posts: For posts that have been directly embedded in the ground, remove embedded post, enlarge hole and replant using concrete backfill (wet or dry mix).

Stolen or Rotated Posts: If signs are stolen, post and all, or have been rotated in their mounts, remove and drill one or two holes in the imbedded section of the post. Place short sections of reinforcing bar laterally through the base of the post before it is embedded. When embedded, this will discourage future rotation or removal.

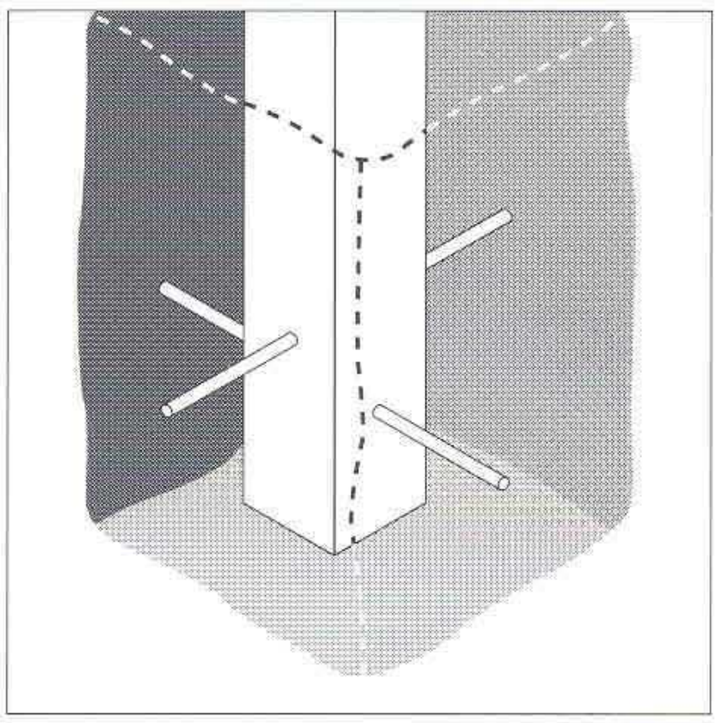

Damaged or Cracked Posts: To eliminate the chance that the sign will fail in the near future, remove and replace any posts that appear damaged or structurally weak from age.

If a sign has two posts, it is generally more cost efficient to replace both posts on an existing installation if one needs immediate replacement and, if the other upright appears to be worn, and will be needing replacement within a few years.

Loose Wall Mountings: Clips and anchor cleats on wall mounted signs may become loose over time. For signs mounted on masonry surfaces, replace a loose anchor with a larger anchor and remount with silicone sealer or anchor shields that incorporate epoxy based adhesives with the embedded bolt. If this is not possible, remount using a new anchor in a nearby location.

Unnecessary vibration is destructive to mountings. Shim wall mounted signs with wooden blocks or rubber pads to alleviate possible play or movement.

On wood signs, insure that bolts and screws that hold hardware are secure. To strengthen an attachment, remove screws, fill holes with silicone sealer and replace old screws with new ones that are a size larger as required.

Sign Hardware
Mechanical fasteners will become loose over time through normal vibration as well as expansion and contraction of the natural materials used to make the signs.

Tighten Bolts: As part of the routine maintenance cycle, all sign bolts should be tightened to be snug, but not too tight. Tightening bolts too tightly may rupture both the reflective sheeting and the plywood, causing premature sign face failure.

Screws and Clips: Screws used to hold keyhole plates will loosen after a few years. As required, tighten; if this is not adequate, fill holes with silicone sealer and/or replace old ones with screws that are one size larger.

Vandalism: The hardware specified in this manual (Appendix B and E) is generally vandal-resistant. There may be locations where the system of sub-surface T-nuts, concealed counter-sunk socket head cap bolts or other specified methods may not be effective as a deterrent to vandalism. Where this is the case, alternate methods should be investigated and tested. For assistance with a specific problem, consult the District Sign Program Manager. Results from any other effective methods used should be sent to the National Sign Program Manager to be considered for inclusion in this manual.

All sign materials are susceptible to accelerated aging and deterioration from extreme weather or other environmental conditions. Obviously, water damage to natural sign materials is the most destructive.

All signs should be routinely sealed, using the appropriate specified paint or stain, to provide the maximum possible protection to the sign assembly. This work is generally performed in the field. For large routed redwood signs, waterway signs, and HDO plywood directional sign panels, this work may be accomplished more effectively if the sign is dismantled, and then refinished in a maintenance shop. If removal is required, schedule maintenance so that the sign panel can be remounted as soon as the scheduled work is complete.

Painting HDO Plywood Sign Panels
The HDO plywood sign panel is vulnerable to water damage if the edges are not sealed. The edges and back of all sign panels should be properly sealed and painted with polysilicone enamel when the sign is manufactured. After three to five years, the sign may require repainting and/or resealing of panel edges. Refer to Appendix B for instructions on painting new signs. Following the below listed procedures when re-painting signs.

Step 1 Lightly sand (100 grit) the edges and back face to cut remaining gloss for best adhesion.

Step 2 The panel must be clean, dry and free of any dust, chemical or cleaning solvents.

Step 3 Brush or roll apply one or two heavy coats of Corps Brown polysilicone enamel. The front of the sign may be masked to prevent paint from being applied to the face.

Step 4 Wipe clean any paint on the sign face before it sets.

Edge Seal Top of HDO Plywood Panels
The top edge of all HDO plywood sign panels should be sealed by wrapping a strip of clear edge sealing tape over the top of the sign extending down at least two inches on the front and back sides. This film protects the sign when it is subjected to rain water that can penetrate into the end-grain of the panel or ice crystals from snow burial.

Step 1 Apply the specified edge sealing tape to a clean, dry surface; generally, after the sign has been cleaned and painted.

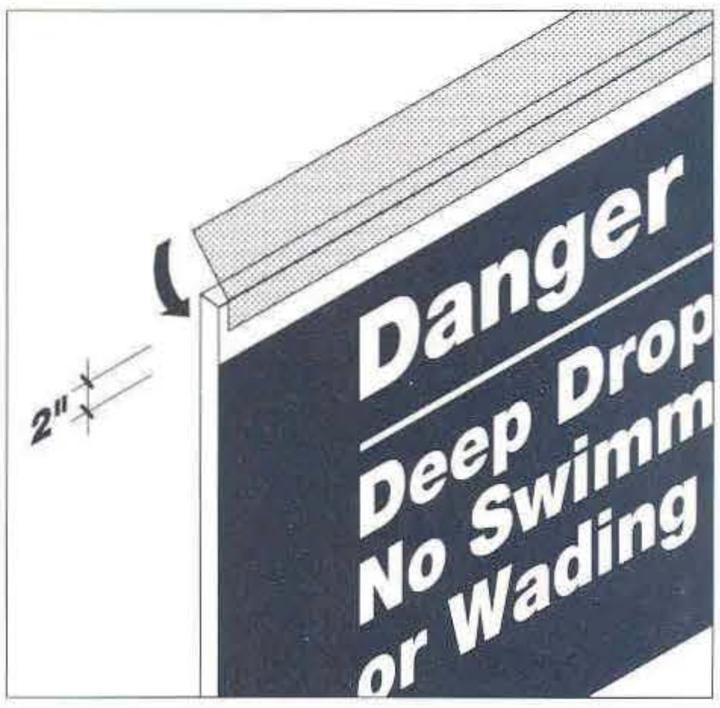

Step 2 To apply, place one edge along the front face, parallel to the top of the panel, and about 2 inches below the top of the sign (for 5" wide material). Wrap the tape over the top and down the back of the panel (2").

Step 3 Squeegee the edge sealer tape tight to the panel and around all edges of the material to make sure that it is well-bonded to the sign.

Sealing Abutting Seams and Joints of HDO Plywood Panels

Large HDO plywood signs that have been constructed from more than one piece of substrate material should be assembled with a one-eighth inch gap between the panels, backed with a full length spline, and weather-sealed at the abutting joints. This helps to prevent moisture penetration, delamination, and failure. When fabricated, the edges of the panel must be sealed using multiple coats of polysilicone enamel. The back face is to be fully splined with an overlapping piece of HDO plywood, glued and screwed to both abutting panels. If this form of construction was not used originally, a full spline should be installed in the field.

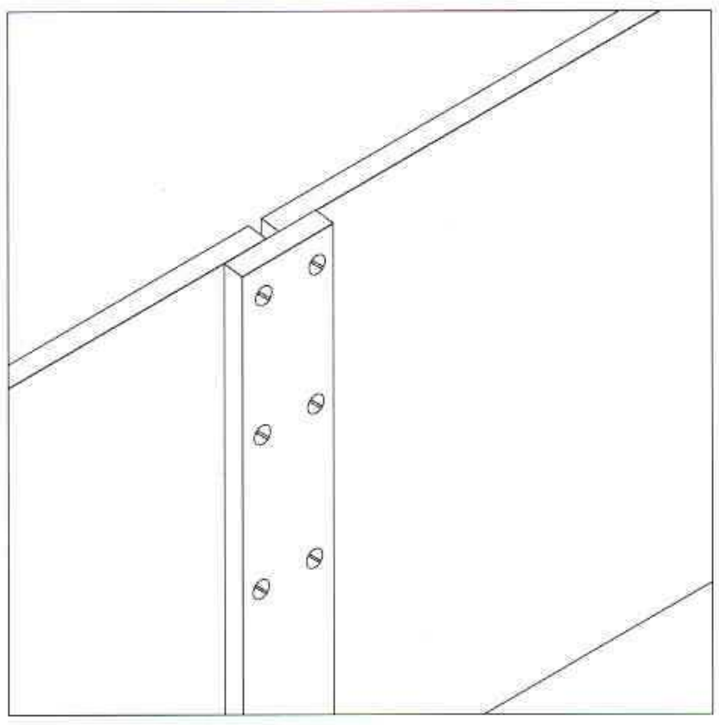

Spline on back of the panel

The reflective sheeting that spans abutting sections of panel is cut to accommodate normal expansion and contraction of the panels. To prevent water penetration, apply a bead of clear silicone sealer along the full length of the joint.

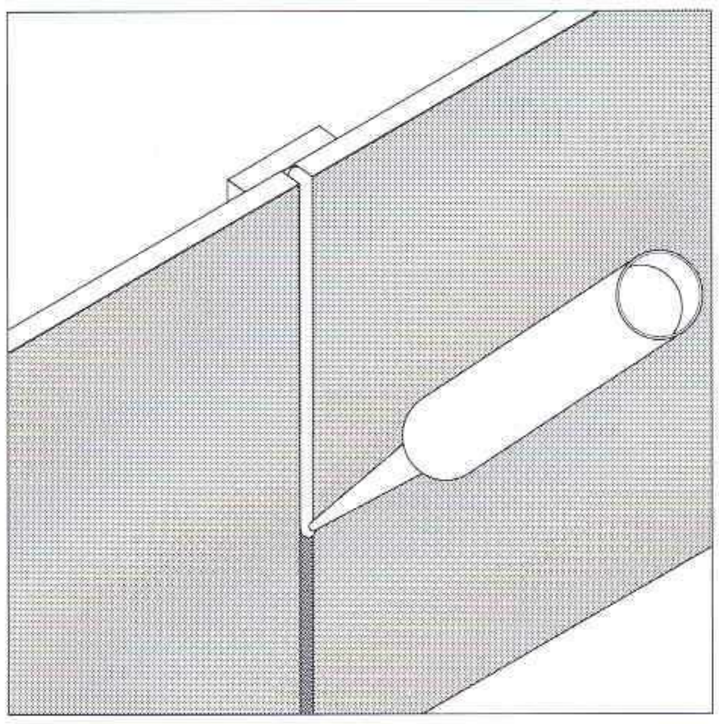

Silicone seal the front joint

Staining Treated Posts

Treated Southern Yellow Pine or Douglas Fir uprights will not accept stain until they have weathered for one or two seasons. Once a sign with treated timber uprights has been in the field for a minimum of twelve months, apply Corps Brown semi-transparent stain so that the posts will match the attached sign panel and other signs in the installation. Posts should be thoroughly clean and dry before staining. Apply stain with a brush. Liberally apply the protective stain to the top (end-grain) of the post. Wipe clean any stain that spills onto the sign panel front or back face.

Staining Redwood Panels, Posts, and Frames

Re-stain panel surface using semi-transparent wood stain as specified. Do not use anything other than the specified material, as it may not be compatible with the existing materials. Use Olympic brand semi-transparent stain, number 715. If this color is not available, see the color mix formula provided in Appendix E. Olympic brand is available throughout the United States at paint or building supply stores. The material provides added protection to the exposed surfaces of the sign. The sign should be re-stained every three years, or more frequently if required, because of harsh weather or environmental conditions, to provide good weather protection to the sign assembly. Refer to the procedures listed below when re-staining signs:

Step 1 The sign assembly must be clean, dry and free of any chemical or cleaning solvents.

Step 2 Remove the sign faces to expose the sign frame and provide access to both the front and back faces of the sign panel. It is recommended that you refinish the sign faces in the shop instead of in the field.

Lightly sand (100 grit) the sign surfaces to smooth any raised grain and help clean surface for refinishing.

Step 3 Dust sanded panel and wipe clean. Stain used in raised surface areas must be applied with a very short-napped roller. Avoid putting on a coat which is so heavy that the stain creeps down into routed areas. It takes several coats, built up over a few hours time, to sufficiently enhance the wood grain and protect the wood. The roller must first be rolled out, almost dry, into a scrap board, so only a little stain is carried onto the sign surface. Overlapping strokes of the roller will show to some extent, so roll in the direction of the grain if possible. Because the color in the can of stain and in the roller pan will settle quickly, the stain should be stirred frequently (every five minutes) to maintain color consistency.

The first coat should be allowed to penetrate, but not harden, and then the second coat should be applied. This may mean as little as one hour between coats on a hot, dry day or as much as four to five hours in shady, humid conditions. Excessive drying between coats (overnight, for instance) will mean poor penetration of the second coat, and a somewhat shiny surface until it weathers a few months. If stain runs down into routed letters it can be wiped out while still wet and not affect the lettering, in most cases.

If the routed letter areas need re-painting, use the specified exterior enamel paint or reflective liquid (refer to Appendix B and E for material specifications). Brush in carefully with a small brush, being careful not to get paint onto the front surface of the sign panel.

Step 4 Allow the stain to dry before the sign is re-assembled. Now that your sign looks new again, attempt to counter the harsh effects of surface dirt by periodic rinsing while wiping with a soft brush. It can greatly prolong the life of your sign's finish!

If you have any questions concerning the above procedures, contact the manufacturer of the sign.

(Instructions provided on this page were developed with the assistance of Southwood Corporation.)

The Sign panel must be as legible as when it was originally installed or it is not serving its intended purpose. On signs with reflective sheeting faces, there will be some reduction of contrast and dulling of panel surface from normal oxidation, but the overall look of the sign must be easily readable and in good repair.

If a section of a sign is damaged, it may be replaced by removal and replacement with a patch of the background material. If the damage is not overly severe, this simple repair may extend the life of a sign by many years.

The retro-reflective qualities of reflective sheeting may also begin to deteriorate as the material ages. For most non-safety signs this should not be a problem. For traffic and safety-related signs, the testing procedure described in this section should be utilized if there is any question about a sign's legibility when viewed at night under reflected light conditions.

The appearance of redwood signs with routed legends will also change as the sign weathers. The overall color may initially become darker and then begin to lighten. The contrast of the letters and background may also be reduced as the paint-filled letters become soiled. However, once this initial break-in period has passed, the sign should, if properly maintained, retain the same look for the life of the sign.

The following sections describes how to replace both background sheeting and sections of sign legends and repair the various types of sign panels used.

Removing Damaged Retro-Reflective Sheeting

Removal of sections of retro-reflective materials from a sign panel may not be successful. These are permanent materials and they become brittle with age and deformed when heated. If this procedure fails, or if the patch is very noticeable, replace the entire sign face.

Removing reflective sheeting legend or background sections is best done with a sharp, beveled putty knife and a heat gun, blowtorch or heat lamp. Heat softens the sheeting so that, with care, the damaged portion can be scraped off using the following procedure.

Step 1 Clean sign surface and area around the background or legend to be removed.

Step 2 Heat the section to be removed.

Step 3 Work putty knife under sheeting edge and strip the sheeting from the adhesive.

Step 4 Remove adhesive remaining on sign face using a cloth dampened with Xylol.

Spot Patching Retro-Reflective Sheeting Backgrounds

All replacement sheeting shall be of the same brand as the material to which it is being applied.

Once sheeting is removed, clean any oil, grease, or dirt from the application surface by wiping with paint thinner or naphtha. After cleaning, wipe surface dry using a clean rag.

Step 1 Securely tape the replacement sheeting to the sign along one edge of the patch. The tape should create a hinge. The patch should overlap surrounding sheeting by at least 1/2 inch.

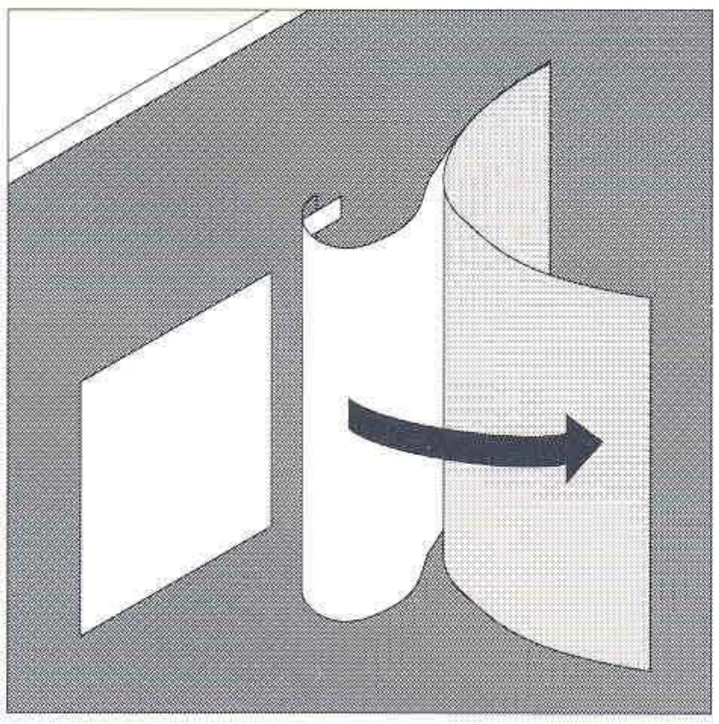

Step 2 Fold back, placing the sheeting face down against clean, dust-free surface and carefully remove the backing paper.

Step 3 Gently lift and position the hinged self-adhesive sheeting on the application surface. When temperature is below 50 degrees F, activate adhesive with activator solution available from the material manufacturer.

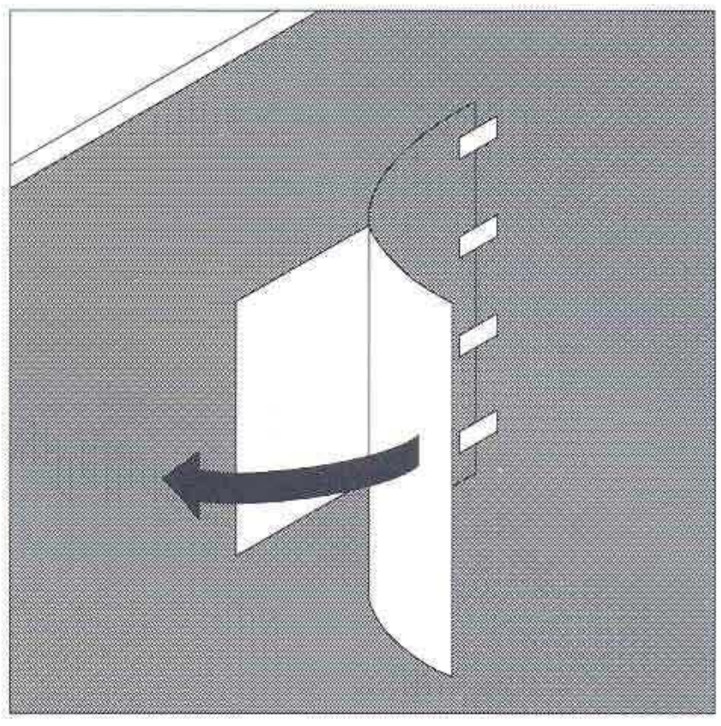

Step 4 When sheeting is positioned, press it firmly to the surface with a squeegee, using overlapping strokes, starting at center and working out to edges. Initial squeegee pressure must be very firm to avoid forming air pockets.

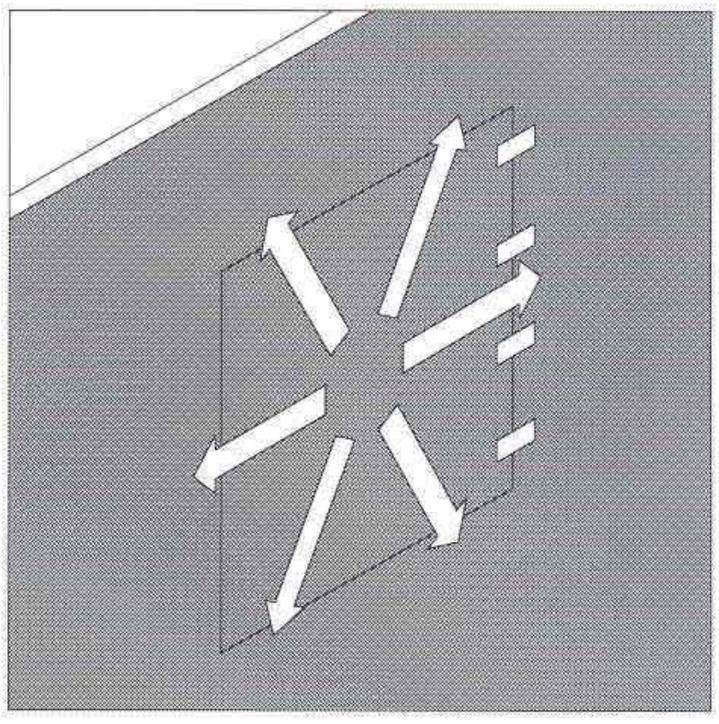

Step 5 Remove the tape hinge and re-squeegee the edges using very firm pressure. Any remaining bubbles can be released with a pin and re-squeegeed.

Replacing Damaged Legends, Borders, and Symbols

Applied sign legend graphics that have been scratched, broken or delaminated can be replaced. Request the replacement graphics from the sign fabricator. These will be computer or die-cut markings supplied on a self-adhesive carrier film with backing paper protecting the adhesive. To apply, follow the instructions below. This procedure is recommended only for single letters or small areas of a sign.

Step 1 Clean the mounting surface. It must be free of dust or any solvent residue.

Step 2 Draw vertical and horizontal alignment lines on the carrier film. Draw or mark the vertical and horizontal lines on the right and left edge of the mounting surface to register alignment.

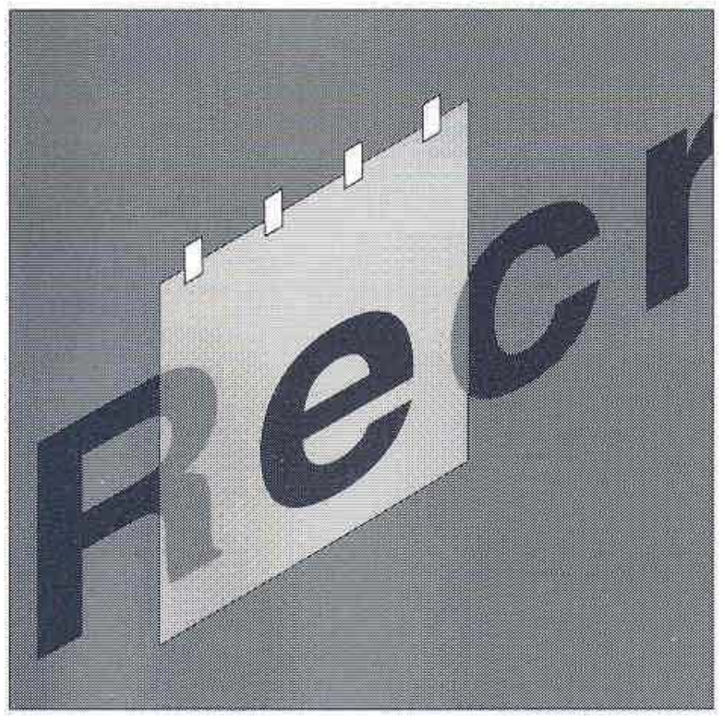

Step 3 Securely tape the graphic in place along the top. The tape should act as a hinge, allowing the graphic to be lifted back over itself without shifting.

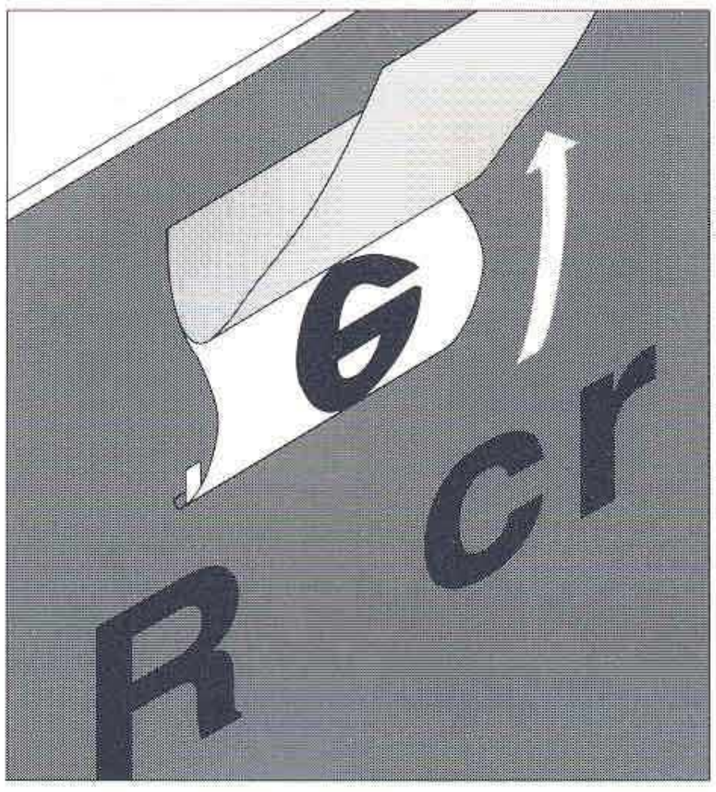

Step 4 Carefully remove the backing paper covering the adhesive and hinge the graphic back in place onto the panel surface.

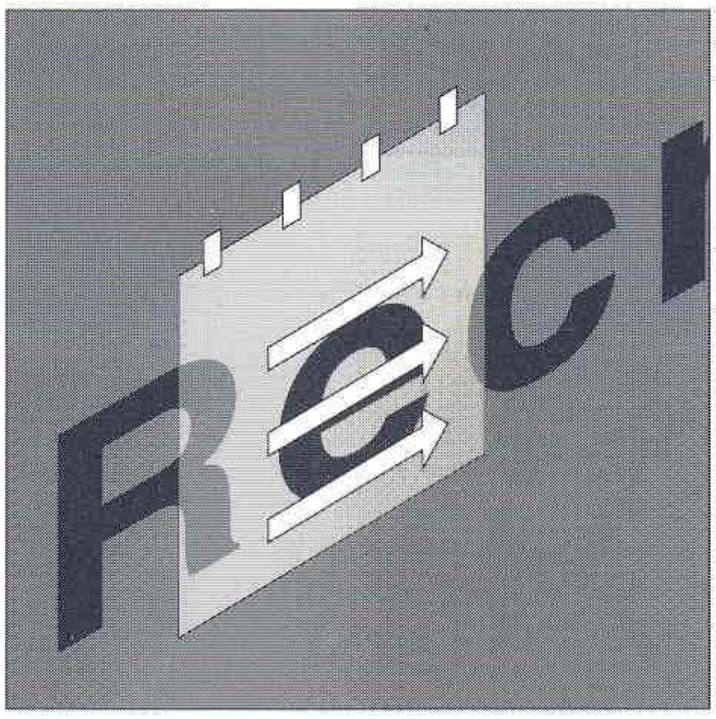

Step 5 Squeegee the surface of the carrier film with firm strokes left-to-right using the squeegee tool provided by the manufacturer.

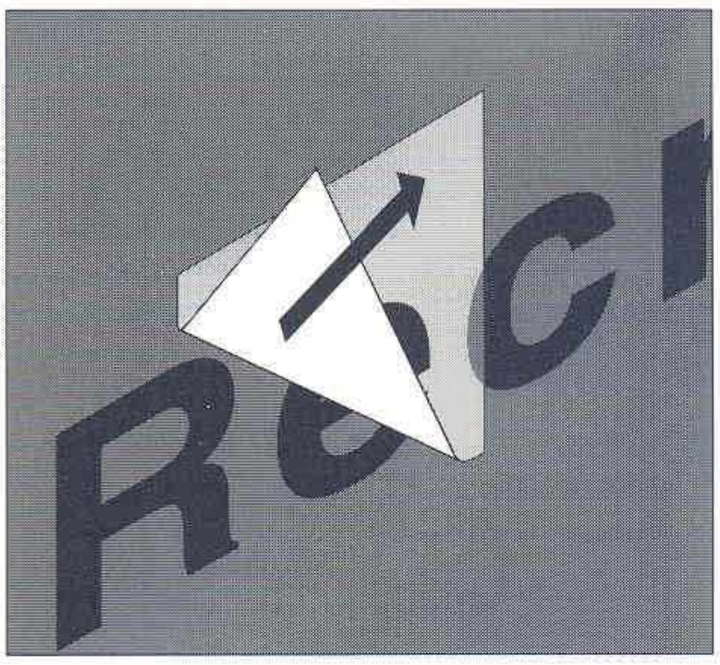

Step 6 Once the new markings are thoroughly squeegeed, gently remove the carrier film by lifting a corner and pulling the material back on itself. If the new graphic begins to lift off with the film, re-squeegee the section and resume the removal.

Step 7 Whether the graphics are being applied one character at a time or in sections, pre-attach the overlapping pieces; cut away any adhesive tape that may prohibit the adjacent graphic from being fully applied. Do not remove the carrier film until the entire job is complete unless the film overlaps the placement location of the adjacent section. Repeat these steps for each remaining character. Align the placement marks with the marks on the panel. Check alignment and positioning of each character before finishing with squeegee.

Step 8 When all characters are positioned, remove carrier film. Starting at top left corner of each character, slowly and carefully peel tape down and back, flat against itself to prevent loosening of legend.

Step 9 Re-squeegee entire legend. Remaining air bubbles may be punctured with a pin and re-burnished.

Bullet Holes or Punctures on HDO Plywood

Where repairs are needed to restore a sign's legibility, follow these steps:

Step 1 Remove all loose wood on both sides of the sign and all damaged sheeting.

Step 2 Fill holes with wood filler or Bondo, if necessary, and sand smooth. Wipe area with clean cloth.

Step 3 Apply a new patch of reflective background sheeting, extending it at least 1/2 inch beyond the patched area on face of the sign.

Step 4 Replace damaged legend with die-cut, pressure-sensitive, pre-spaced letters, borders or symbols covered by the patch and firmly squeegee in place.

Step 5 Paint the repaired area on the back of the sign with Corps Brown polysilicone enamel.

Bullet Holes or Punctures on Aluminum Signs

It is generally not cost efficient to repair aluminum sign faces damaged from bullet holes. It is recommended that these signs be replaced as soon as conditions are identified in order to discourage similar problems with other signs.

A bullet-damaged sign can be repaired in the shop and re-used, following the procedures below.

Step 1 Remove all damaged background sheeting and legend.

Step 2 Straighten the sign using a hammer and backing plate.

Step 3 Remove any additional sheeting damaged during straightening.

Step 4 Clean the entire area with Xylol; then naphtha. Note: screen printed sign surfaces will be dissolved using these cleaning agents.

Step 5 Patch the bullet hole or puncture on both sides using 3M No. 425 UAL aluminum foil tape. Use your squeegee to apply firm pressure. Apply to both sides of the sign. On large holes, begin by placing the foil at the bottom of the hole, overlapping each strip shingle fashion as you move up.

Step 6 Apply reflective background sheeting, extending it at least 1/2 inch beyond the foil tape strips.

Step 7 Preferably resurface a panel with a new sign face, or if the damaged area is quite small, replace damaged legend with die-cut, pressure-sensitive, pre-spaced letters, borders or symbols and firmly squeegee in place.

Step 8 Paint taped surface on back with metallic paint to match area.

Repairing Damaged Aluminum Signs

A bent aluminum traffic sign can often be restored simply by straightening. If the reflective background or legend has not been scraped or severely damaged, a replacement face may be applied over the old sign face. Generally, it is easier to repair a sign that is bent or has a damaged face in the shop instead of at a field location. The bent panel may be hammered out using hardwood backing blocks or straightened on sheet metal rollers.

Repairing Routed Wood Sign Faces

Many abrasions or bullet holes in a routed redwood sign will be difficult to see from a normal viewing distance. If damage is extreme, follow the procedures listed below to repair the existing problem.

Step 1 Remove all splintered wood and dress all bullet holes and damaged wood with a knife.

Step 2 Fill all cracks, holes and imperfections with wood filler.

Step 3 Sand the repaired sections, sign edges, back and face. Dust off sign with air hose or tack rag; thoroughly clean repaired section.

Step 4 Apply Corps Brown semi-transparent stain to repaired area.

Repainting Routed Redwood Sign Legends

To refinish the paint on routed sign legends or replace the castle logo, follow the procedure described in Appendix B, page B.3a.

Color Fading on Reflective Sheeting
If the color of the background has faded and the type has become yellowed to the point where there is not sufficient contrast to read the sign from its intended viewing distance, the sign panel should be replaced. This problem will be most acute in climates with bright sun and abnormally strong concentrations of ultraviolet light. If this problem arises before the sign is at least seven years old, the District Sign Program Manager will consult the manufacturer of the reflective sheeting to learn if this material has failed prematurely or is faulty.

Inspection of Nighttime Reflectivity
Reflective signs must be inspected at night as well as during the day to insure night-time legibility. The problem of night safety on roads is acute. Statistics show that, while only one-third of drivers travel after dark, over half of the fatalities (53 percent) occur at night. Underscoring the importance of sign reflectivity is the fact that 90 percent of a driver's actions result from decisions made based on what is seen. To this end, signs must be optimally legible during this viewing period.

Step 1 With masking tape, affix an eight-inch by ten-inch sign inspection guide test panel to a clean section of the sign. District Sign Program Managers can obtain sign inspection kits from the reflective sheeting manufacturer.

Step 2 Step back about thirty feet. Hold flashlight approximately two inches from your eyes and shine it at the panel. Do not use vehicle headlights.

Step 3 If the inspection guide is brighter than the sign, the sign should be replaced within a year.

Step 4 If the sign is brighter than the inspection guide, the sign will not have to be replaced for a number of years.

Step 5 If the sign and the inspection guide appear of equal brightness, the sign has from one to two years of useful life left.

As experience is gained in this test procedure, it becomes easier to evaluate reflective brilliance without using the inspection guide on each sign. With enough experience, the inspection guide is only needed for questionable cases.

The Sign Maintenance Field Report Worksheet is to be used by rangers, maintenance personnel, and the Project Sign Program Manager to identity signs needing repair. This worksheet is to be used for both scheduled maintenance surveys and a part of daily inspections of the projects while conducting routine business. Each worksheet can accommodate a report of up to five individual signs.

It is imperative that damaged signs be reported as soon as the problem is noticed so that the necessary maintenance work can be scheduled and completed in a timely manner.

Shown below is a reduced version of the Sign Maintenance Field Report Worksheet. This worksheet has been filled out to illustrate how these forms are used. Full size reproduction art of this worksheet is provided in Appendix F, page F.146.

Instructions: Refer to the guidelines below when preparing a Sign Maintenance Field Report Worksheet.

1) Plan ID Number: Identify if known. If not known, describe sign type and placement location so that information can be placed on the worksheet by the person preparing the Sign Maintenance Repair/Replacement Worksheet.

2) Location: Identify location of sign by area or road name.

3) Date: Enter date of report.

4) Description of Problem: As shown, provide a brief but thorough enough description of the problem so that an accurate repair or replacement work order can be prepared by the maintenance foreman or Sign Program Manager.

5) Recommended Action: Provide a general description of the work needed to repair or replace the sign.

6) Title Block: Enter all requested information as shown.

Plan ID No.	Sign Location	Date
R-88	Raven Circle Campground	8-17-88
	Description of Problem	**Recommended Action**
	Campsite identification bollard damaged by vehicle (No. 12)	Replace. Reuse existing number 12 panel. Place into new post in shop. Remove old concrete with post.

Plan ID No.	Sign Location	Date
S-12	Shepards Dock	8-18-88
	Description of Problem	**Recommended Action**
	Parking Sign "Tie down Only" damaged by vandals	Replace sign panel (1" letters) Post is in good shape.

Plan ID No.	Sign Location	Date
N-8	Highway 128 at entrance to Neils Picnic Area	8-18-88
	Description of Problem	**Recommended Action**
	Tree branches blocking view of STOP sign at exit onto Rt 128	Have maintenance crew remove storm damaged branches. Work will require a pole saw.

Plan ID No.	Sign Location	Date
	Description of Problem	**Recommended Action**

Plan ID No.	Sign Location	Date
	Description of Problem	**Recommended Action**

US Army Corps of Engineers

Project Name/Location: Lake Shelbyville

Prep. by	Date	Review by	Date	Page	of	pages
JRT	8-14-88	MS	8-21-88	1		1

Sign Maintenance Field Report Worksheet

The Sign Maintenance Repair/Replacement Work Order is used as the primary record to schedule and track sign maintenance work. This includes a description of the work to be done as interpreted from the field report as well as the labor, materials and equipment required to complete the job. This worksheet can be conveniently printed from the full size reproduction art provided in Appendix F, page F.147 in multiple sets to allow distribution of copies for the Sign Program Manager, maintenance foreman, and repair crew.

Shown below is a reduced version of the worksheet. This sample has been filled out to show how it is to be used.

Instructions: Refer to the guidelines below when preparing a Sign Maintenance/Replacement Work Order.

1) Requisition Number: Enter request number for the job, date and foreman's name.

2) Plan ID Number: Identify sign number from the project sign plan. Describe the sign location and project name as shown.

3) Sign Type: Enter all standard descriptive information as requested on the two lines provided.

4) Description of Problem: Provide clear work instructions for maintenance crews. Insert name of the person that reported the problem and date of the field report. This record will help prevent duplicate requests for the same repair.

5) Materials Required: List all items needed to make repair.

6) Order Materials From: When materials must be ordered for the repair, note the name of the supplier and order information on the right.

7) Equipment Needed: List vehicles and tools required to make repair.

8) Labor Required: Identify personnel needed and time required to make the repair. Upon completion, maintenance personnel should note the actual time required to complete the project.

9) Project Review/Inspection: All completed work should be inspected prior to updating project sign plan records to verify that scheduled work was completed as specified.

10) Sign Schedule: Records of all completed maintenance work shall be made part of the project sign schedule.

US Army Corps of Engineers

Sign Maintenance Repair/Replacement Work Order

Prepared by: Foreman: Jim Smith
Date: 8/23/88
Requisition Number: 831-0098

Plan ID No.: S-12
Project Name and Sign Location: Le Page Park Boat Launch, Lake Umatilla

Instructions: Use this form to request sign maintenance or replacement as reported on the Sign Maintenance Field Report Worksheet. Place "NA" in any space that is not applicable to this request. This worksheet should be retained for shop records with copies for Maintenance Foreman and Sign Program Manager.

Sign Type	Legend Size	Panel Size	Specification Code	Special, Not Standard
PRK-08	1"	12"x 14.66"	ALU-5	na

Post Size	HAGL	Color	Installation Date	Mfgr. Code	Comply (check)	Manual Page
4"x 4"	60"	WH/BK	9-21-87	381	x	9.11

Description of problem and recommended action:
Replace panels of PRK-08 adjacent to launch area.

Tighten cap screws of all other parking signs while in the area.

Ranger Report Date: 8/18/88
Report by (name): J.R. Thomas

- [ ] Wash sign
- [ ] Remove grafitti
- [ ] Repair sign face
- [x] Replace sign panel
- [ ] Repair sign mount
- [ ] Replace sign mount
- [ ] Remove sign
- [ ] Replace with new sign panel and mount

Reviewed by Sign Program Manager: M. Stevens

Materials Required:
1- PRK-08-1"
2- .375"x 3.5" Cap screws and cap nuts

- [x] From Stock
- [ ] Order

Order Materials from: NA

Date Ordered:
Expected Delivery:
Requisition Ref. No.:

Equipment Needed: Pickup Number 3451

Labor Required: Laborer (Bob Berger)

- [ ] Staff Crew
- [x] Contract

Time Required: 60 min.
Work to Begin (date): 8/24/88
Foreman: J. Smith

Project Review/Inspection
Date Completed: 8/24/88
Inspected by: J. Smith

Update Project Sign Schedule
Date: 8/25/88