CHAPTER 3

EMP HARDENING CONCEPTS FOR FACILITIES

3-1. Outline. This chapter is organized as follows:

3-1. Outline
3-2. Discussion of general concepts
- *a. System functions*
- *b. Survival confidence*
  - *(1) Levels of confidence*
  - *(2) Inherent uncertainties*
- *c. Critical equipment sensitivities*
  - *(1) Design margin*
  - *(2) Coupled energy*
- *d. Potential HEMP coupling paths*
- *e. Design verifiability*
  - *(1) Hardness validation*
  - *(2) Retrofit designs*
  - *(3) Designing to facilitate testing*
  - *(4) Approaches to validation*
- *f. Physical environment*
- *g. Other factors*

3-3. Description of HEMP hardening concepts
- *a. Shielding*
  - *(1) Global shielding*
  - *(2) Tailored shielding*
  - *(3) Zonal or topological shielding*
  - *(4) System configuration*
  - *(5) Cable shielding*
  - *(6) Grounding*
- *b. Hardening allocation concept*
- *c. Shield penetration protection concepts*
  - *(1) Large access doors*
  - *(2) Personnel entrances*
  - *(3) Electrical penetrations*
  - *(4) Transient suppression devices and filters*
  - *(5) Electromagnetic isolation*
  - *(6) Dielectric isolation*
  - *(7) Isolation switching*

3-4. Cited references
3-5. Uncited references

3-2. Discussion of general concepts. The HEMP environment is defined by DOD-STD-2169. This definition includes the classification and specific information on field strengths, pulse characteristics, spectral content, angle of arrival, range of relative burst locations, and weapon yield.

a. System functions. Associated with the electronic and electrical systems and subsystems to be protected are support functions such as utilities, personnel housing, office space, document storage, food facilities, and others. Many aspects of a facility are not sensitive to HEMP energy or are robust enough that HEMP protection is not required. Some sensitive system elements may not be critical to the facility mission. The definition of mission-essential functions that must remain in operation will have major impact on the choice of hardening concepts.

b. Survival confidence. The issue of defining "survivability requirements" must be specifically addressed and resolved in the concept definition phase of each particular HEMP hardening effort. The system user should define the required survival confidence level, at least qualitatively, since this factor will determine how conservative the design will be. If required confidence levels are high, greater safety margins in protection levels will be required, producing a need for a high-quality overall shield and adequate validation testing.

(1) Levels of confidence. Survivability confidence may require that a facility--

(a) Experience no HEMP-induced stress greater than the stresses occurring in the normal operating environment.

(b) Experience neither permanent nor operational upset as a result of the HEMP.

(2) Inherent uncertainties. Another survivability issue concerns the inherent and analytical uncertainties in quantifying the stress level causing malfunction or the stress level experienced by the equipment.

c. Critical equipment sensitivities. The main factors in determining required protection levels are--

(1) Design margin. The design margin required, which is related to the difference between critical equipment sensitivities and coupled transients.

(2) Coupled energy. The energy level coupled from connected subsystems or components.

d. Potential HEMP coupling paths. Most electronic/ electrical systems to be HEMP-hardened and their housing facilities will have to interface with external elements such as antennas, utilities, communications lines, and other facilities. The complexity of interfacing and possible coupling paths for HEMP energy will greatly affect the choice of topological approaches to HEMP hardening.

e. Design verifiability.

(1) Hardness validation. A key issue in HEMP hardening philosophy and associated design concepts is that of hardness validation and required confidence levels for final acceptance. (Required confidence levels are usually specified only qualitatively.) Generally, the more critical the facility is to national military security, the more politically and publicly visible it will be; for these facilities, higher confidence levels will be required. In all cases, design concepts may not be chosen if they cannot be validated with acceptable confidence levels. For example, a design concept for a large underground facility that depends on a degree of protection from the overburden and has numerous conducting penetrations through the overburden may have hardness uncertainties. Examples include questions about the homogeneity of the overburden and difficulties in protecting penetrations when no highly conductive shield is present. If the facility is too large to be practically subjected to a threat level test by an EMP simulator and no other proven validation tests exist, the uncertainties will prevail and hardness confidence will be low.

(2) Retrofit designs. In retrofit designs, another consideration in concept selection may be the ability to validate hardness without disrupting the operation of critical systems. Concepts should be chosen to allow nondisruptive validation and acceptance testing.

(3) Designing to facilitate testing. Good design validation requires a choice of design concepts that facilitate testing. HEMP hardening management must include adequate funding and scheduling for this effort. The difficulty and cost of validation will increase with--

(a) System complexity.

(b) Topology layer and zone numbers.

(c) The number of required penetrations.

(d) The protective design philosophy.

(4) Approaches to validation. In considering the validation problem for concept selection, it is helpful to review the many approaches to validation, including laboratory testing, full-scale HEMP threat level field testing, partial scale threat-level field testing, current injection testing, scale model testing, physical modeling testing, computer modeling evaluations, analyses, and radio frequency CW shielding tests.

f. Physical environment. Various aspects of the facility physical environment can greatly affect concept selection, mainly in the degree to which corrosion can accelerate aging and degradation of protection.

g. Other factors. Other factors to be considered in concept selection are--

(1) Complexity of required interactions with facilities.

(2) Design and construction costs.

(3) Constructibility.

(4) Maintenance costs.

(5) Reliability requirements.

(6) Flexibility for expansion or system changes.

(7) New construction versus retrofit.

(8) Supportability.

3-3. Description of HEMP hardening concepts.

a. Shielding. For HEMP-hardened facilities, some kind of EM shielding is essential. Shielding theory is discussed in detail in chapter 5 and is treated thoroughly in the literature. Shielding involves the use of a barrier or series of barriers to reduce the magnitude of the EM energy incident upon the electronic or electrical system to be protected. Shielding philosophy can be developed around different approaches as discussed in paragraphs (1) through (6) below and shown in figure 3-1.

(1) Global shielding. Global shielding (or hardening) is a protection concept that uses an overall shield to encompass the entire facility. In this approach, all conducting penetrations and all apertures are protected at the shield. The intent is to keep all HEMP fields and HEMP-induced transients outside the protected volume. The global shield could be placed on the entire outer walls, ceiling, and floor (surface) of the facility, or it could be reduced to a smaller volume that contains all sensitive equipment to be protected. The most common shield material for global shielding of ground-based facilities is sheet steel with welded seams, although other designs can provide adequate global HEMP shielding.

(a) Global shielding may be desirable if there is a requirement to be able to modify, reorganize, add to, or move the sensitive equipment without changing the shield or protective features.

(b) A remote, yet possible, disadvantage of global shielding that must be considered is that a single protective component or device failure may jeopardize the entire facility.

(2) Tailored shielding. Tailored shielding is a protection concept in which shielding is designed and constructed according to specific protection requirements for the equipment involved. After defining the system to be protected, its possible operating configurations, the expected HEMP

environment, coupling paths, equipment sensitivities, and subsystem/system criticalities, the required protection levels for various subsystems or groups of subsystems can be defined. Tradeoff studies may be performed for comparing various shielding arrangements to verify that they meet safety margins in protection, cost-effectiveness, maintainability, survivability, flexibility, and other requirements. The objective is to optimize protection for the specific mission-critical system. Tailored shielding options may include global shielding, zonal shielding (discussed under (3) below), shielding of cabinets or components, or combinations thereof. In a typical tailored protection design, discrete protection will be provided to eliminate specific, localized deficiencies.

(3) Zonal or topological shielding. Zonal or topological shielding (ref 3-1) is a concept in which a facility is divided into zones, with shielding barriers located topologically in a shield within a shield configuration. Figure 3-2 shows a generic topological shielding system. The outer zone is designated zone 0; zone 1 is inside shield 1 but outside shield 2. Zones and shields are assigned increasingly larger numbers as they progress toward the more deeply nested areas.

(a) Note that figure 3-2 is a simple schematic to represent the zoning concept; although not depicted, each zone could contain more sets of subzones. For example, shield 3 could contain 2 or more zones designated as zone 4. Further, figure 3-2 shows possible shield types including a site housing shield and an interior shielded room, with equipment and component housings making up the shields of the next topological orders.

(b) The zonal concept shown in figure 3-3 is a specific example of an underground facility that uses topologically zoned protection. The rock and soil overburden above the facility serves as shield 1. Zone 1 is the volume between the underground building and the excavated outline of overhead rock. In some cases, a shield of this type provides adequate protection for robust electrical or electronic equipment. Shield 2 is composed of a sheet metal building that may provide only a limited level of shielding. Inside this building (zone 2), some systems would be adequately protected. The above-ground building and connecting conduit represent an extension of zone 2. Shield 3 is then the interior shielded room which provides further protection within zone 3, where sensitive, electronic equipment may be operated.

(c) Figure 3-4 shows another specific example of a zonal or topographically shielded facility for which steel-reinforced concrete comprises shield 1. This type of shield usually does not provide adequate protection and thus the additional shields are necessary.

(4) System configuration. The term "system configuration" identifies which way the cables, wires, equipment, and subsystems are laid out in relationship to each other, as well as the relationship of these items to the topological boundaries. In some instances, the cables, connectors, and equipment casings are actually part of the topological protection. Although

"system configuration" as defined does not directly attenuate the environment, it is an important element in the topological protection concept. The system configuration influences protection design requirements since some configurations are easier to protect than others (e.g., collocation of all mission-critical equipment). Thus, the system configuration should be coordinated with the protection design and the protection topology will be optimal for a specific configuration. During the facility life cycle, the protection design may be required to accommodate some changes in configuration. To ensure that the configuration's design modifications do not compromise or defeat the protection, careful configuration management is necessary. The topology should be designed to tolerate configuration changes that are totally within a boundary. The boundary can never be violated (for example, opened)--only extended. All modifications must be subjected to review by EMP experts to ensure continual compliance with the HEMP hardening requirements.

(5) Cable shielding. Conductive or metallic cable shielding or conduit is used in the zonal/topological protection concept to extend the boundary formed by equipment enclosures and thus provide a way to interconnect elements while maintaining boundary continuity. Cable shielding is also used to protect a wire or wires as they travel from one boundary to another. This would be the case with a shielded RF signal traveling from its entrance into a building to the RF receiver. From a HEMP standpoint, the shielding attenuates coupling of radiated energy within the first boundary as the signal travels to the receiver. Of course the shield is somewhat reciprocal in that it also prevents signals from radiating out of the cable. The main feature of cable shielding stressed here is continuity of the boundary provided by the cable shield/connector combination which may require special joints.

(a) Another way to maintain this continuity and provide cable shielding is by using steel conduit to house all wires and cables. The steel conduit will provide substantially higher shielding levels than the cable shields. Chapter 5 presents conduit system design in detail.

(b) Both cable shields and conduit connected to a shielded zone must have equal or greater shielding effectiveness than the shield.

(c) Figure 3-5 shows a cable entry vault used to protect cable penetrations through a shield. Entry vaults are discussed under shield penetrations in paragraph c below.

(6) Grounding. Some form of grounding is required in any electrical or electronic system for protecting personnel from electrical shock, controlling interference, proper shunting of transient currents around sensitive electronics, and other reasons. (Grounding does not directly provide protection against EMP, but must be done properly to prevent creation of more serious EMP vulnerabilities.) Ideally, grounding would keep all system components at a common potential. In practice, because of possible inductive loops, capacitive coupling, line and bonding impedances, antenna ringing

effects, and other phenomena, large potentials may exist on grounding circuits. The choice of grounding concept is therefore important in the HEMP protection philosophy.

b. Hardening allocation concept. The shielding concepts in this chapter introduce the concept of hardening allocation in which the overall protection philosophy specifies degrees of hardening for each zone. The practicality of this concept usually depends on the complexity of the system to be protected. If it is determined that an overall SE of 80 decibels is required for the most sensitive components, but the remaining elements require only 60 decibels, then zones with different SE may be established. The cost-effectiveness of a zonal design with a hardening allocation for each barrier must be studied carefully on a facility/ system specific basis to determine the practicality of this approach.

c. Shield penetration protection concepts. All shielded zones will require penetrations to allow entry of equipment, personnel, electric power, communications, and control signals, ventilation, water, fuel, and various fluids. Without protection, these penetrations compromise the shield.

(1) Large access doors. Large access doors are often necessary to provide an entry for equipment, supplies, or vehicles into EMP hardened facilities. In facilities that require blast overpressure protection, large blast doors are used. These doors generally use one or more thick steel plates to provide protection. The door's inherent shielding ability is thus high, but its large size presents a difficult gasketing problem. If blast protection is not required, it is still necessary to design the door with a high degree of structural strength. This step is to ensure that the door can provide the necessary gasket compression force and that proper mechanical alignment of closure contact surfaces is maintained.

(2) Personnel entrances. Two concepts are commonly used for personnel entrances: conventional EMP/RFI shielded doors and personnel tunnels that act as waveguides below cutoff. The shielded doors generally use metal fingerstock or EMI/RFI gaskets to provide an electromagnetic seal around the door jamp periphery. Currently available gasket and fingerstock doors require regularly scheduled maintenance and/or replacement to maintain required shielding levels. The gaskets are relatively easily damaged and also require replacement. Air-expandable doors may also be used, although they typically have more maintenance problems. These doors generally use a movable subassembly of two shielding plates on a framework that is moved on rollers in and out of a steel-framed opening. When closed, air expansion tubes cause the two shielding plates to make uniform surface contact with the frame inner surfaces.

(a) Fingerstock doors can provide over 80 decibels of shielding to magnetic fields from 100 kilohertz through 30 megahertz and greater SE to plane waves and electric fields. Air-expandable doors can provide greater than 120 decibels of magnetic field SE from 10 kilohertz to 10 gigahertz.

(b) Air-expandable doors require an air source and air controls with back-up in safety controls. They also require very strong steel frames and, as a result, are more expensive than gasketed doors. They are also more difficult and costly to maintain. The air-expandable door would thus be used only when a large safety margin of HEMP shielding is needed or when equipment to be protected is extremely sensitive to HEMP or other EM interference.

(c) The waveguide entry tunnel acts as a WBC that will typically have a cutoff frequency* in the 60-megahertz region. Thus, the higher frequencies in the HEMP spectrum will penetrate it. Doors are therefore required to prevent the higher frequency signals from penetrating. Since only high frequencies can propagate through, doors have good attenuation in this range and can easily provide the required attenuation. Maintenance requirements are not as stringent as for doors that must block the entire frequency spectrum; thus, the waveguide entry tunnel for personnel access is attractive from a life-cycle cost standpoint. When the facility has a TEMPEST requirement as well as EMP shielding requirements, the tunnel is usually designed with interlocking doors, i.e., a door at each end and interlocked so that only one door can be opened at once, thus preventing any leakage of classified information during the entry of personnel. The waveguide entry tunnel also is highly useful in underground or buried facilities because the overburden attenuates the high frequencies, thus acting to complement the tunnel attenuation.

(3) Electrical penetrations. A common feature for electrical penetrations in a global protection approach is a cable entry vault to prevent large currents on external conductors from being conducted into the facility. Ideally, all penetrations should enter a single vault. In some cases, however, it may be necessary to separate the vault into two compartments or to use two vaults for penetrations by different types of lines: power, signal and control, and antenna. The vault must be connected directly to the external facility ground system. (See chapter 5 for details.) The cable entry vault serves three purposes: to insure that penetrating conductors do not cause conducted HEMP energy to enter the protected topology; to contain and divert penetrator-conducted HEMP energy to the boundary exterior; and to contain or divert radiant EM energy resulting from the activation of transient suppression devices subjected to a conducted pulse. Conductive penetrations, such as a conduit, waveguide, or shielded cable, must have a circumferential weld or other means of providing good electrical connection at the intersection with the entry vault.

---

*Cutoff frequency is determined by the relationship F_0 = 5900 MHz/W, where W is the greatest cross sectional dimension in inches. Below cutoff, the waveguide attenuation is a function of the waveguide length. In practice, the length- to-width ratio should be 5.

(4) Transient suppression devices and filters. Transient suppression devices fill a critical gap in the concept of topological protection. The necessity of supplying power to a facility and of communicating over cables or antennas are two major factors contributing to their use. Power lines entering a facility are typically connected to an unshielded power grid so that large, conducted currents must be bled off to prevent their entry into a facility. These currents are diverted to the exterior boundary of the topology. This boundary can be an overall external shield or an enclosed entrance vault. Antennas, such as for high-frequency (HF) communications, are designed to gather EM signals (at wavelengths in the EMP frequency spectrum) and to apply these signals to the center conductor of a shielded cable. The EMP transients associated with an HF antenna can be, by far, the largest single signal entering a facility. Transient suppressors often are used in conjunction with filters. Filters are frequency-selective whereas surge suppressors are amplitude-selective. Filters often are used to attenuate transients associated with the nonlinear operation of surge arresters. They also are used for selectively passing (or stopping) frequency bands as in the case of antenna cable penetrations. Transient suppressors are an integral part of the EM topology, demanding specific installation techniques as will be seen later. A spark gap is a surge suppressor that provides a conducting path to ground when the voltage across the device exceeds the gap breakdown level. Spark gaps with a high current capacity do not operate quickly enough to block all HEMP energy transients entering the vault. For this reason, it may be necessary to use other protection devices in conjunction with the spark gap.

(5) Electromagnetic isolation. The electromagnetic isolation concept involves the use of elements either immune to interaction with EM radiation or that provide a current path interruption. Optical fibers are examples of elements immune to EM radiation that can be used to reduce the number of conductive penetrations. For practical purposes, optical fibers can be used for long communications links without signal interference from HEMP. Further, they can be used to enter shielded zones through waveguide below cutoff penetrations without compromising the EM shielding effectiveness, as figure 3-6 shows. Where possible, optical fibers are recommended for--

(a) Voice and data communications lines.

(b) Energy monitoring and control systems (EMCS).

(c) Intrusion detection systems.

(d) Other security systems.

(e) Control systems.

---

*Within a facility, inside shield 1, power lines are often routed through steel conduits to provide shielding.

(f) Any other use where possible and practical.

(6) Dielectric isolation. Other isolation techniques include using dielectric isolators for shield penetration when external metallic EM energy collectors are involved. Examples are control rods* or cables (normally metallic), piping systems for fluids, and metallic duct systems for air. Dielectric sections are installed at or near the shield to prevent the energy induced on the external metallic part from being conducted through the shield. Dielectric control rods can enter through a shield in the same way as optical fibers, that is, through a waveguide-below-cutoff section. Dielectric isolation concepts for metallic piping systems and air ducts are discussed in chapter 5.

(7) Isolation switching. Although not recommended now, isolation switching has been provided at facilities so they can use commercial electric power during routine operation, but can switch to internal generators or power systems in the event of an emergency such as nuclear attack. Since the commercial power wiring is a source of significant HEMP energy injection through a shield, switching to internally generated power is an obvious advantage when advance warning of impending nuclear attack is received and throughout the entire nuclear attack cycle. This concept applies to communications lines and control lines as well as power lines. Switching used in past facility designs has been called "alert attack" switching. Such switching must provide adequate switch contact separation to prevent arcing, and must be designed to reduce coupling interactions between wiring and switch contacts to acceptable levels. It should be noted that advance notice of a HEMP attack is not always provided.

3-4. Cited reference.

3-1. Vance, E. F., Shielding and Grounding Topology for Interference Control, Interaction Note 306 (Air Force Weapons Laboratory [AFWL], April 1977).

3-5. Uncited references.

Bailey, D. T., et al., EMP Hardening Guidelines: System Life Cycle Cost Design Considerations, AWFL-TR-79-161 (AWFL, May 1980).

BDM Corporation, Defense Nuclear Agency (DNA) EMP Course (Draft), BDM/W-82-305-TR (DNA, April 1983).

Mindel, I. N., DNA EMP Awareness Course Notes, Third Edition, DNA 2772T (October 1977).

---

*Rods that must be mechanically rotated or pulled to control switches, valves, and other components.

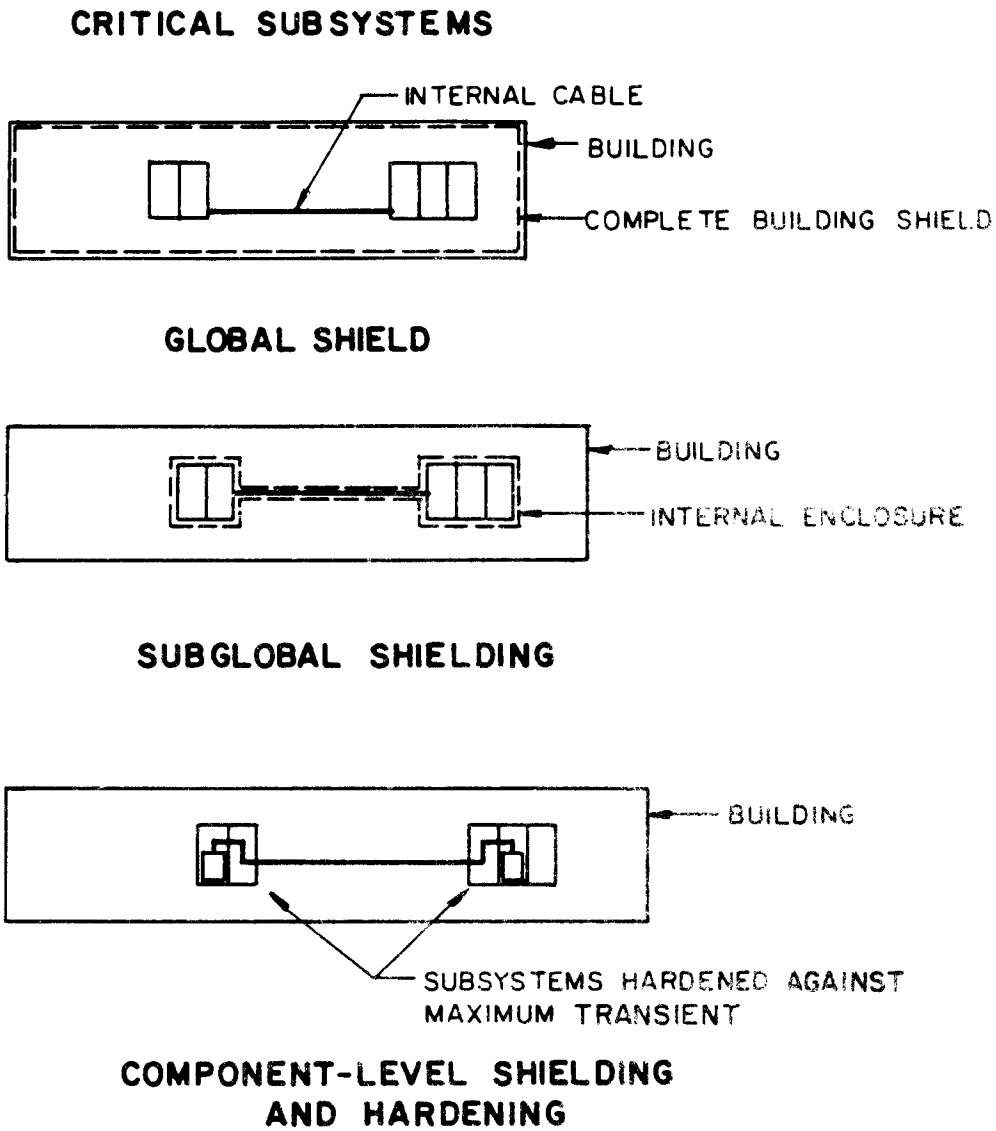

Figure 3-1. Building examples showing three concepts for critical equipment protection.

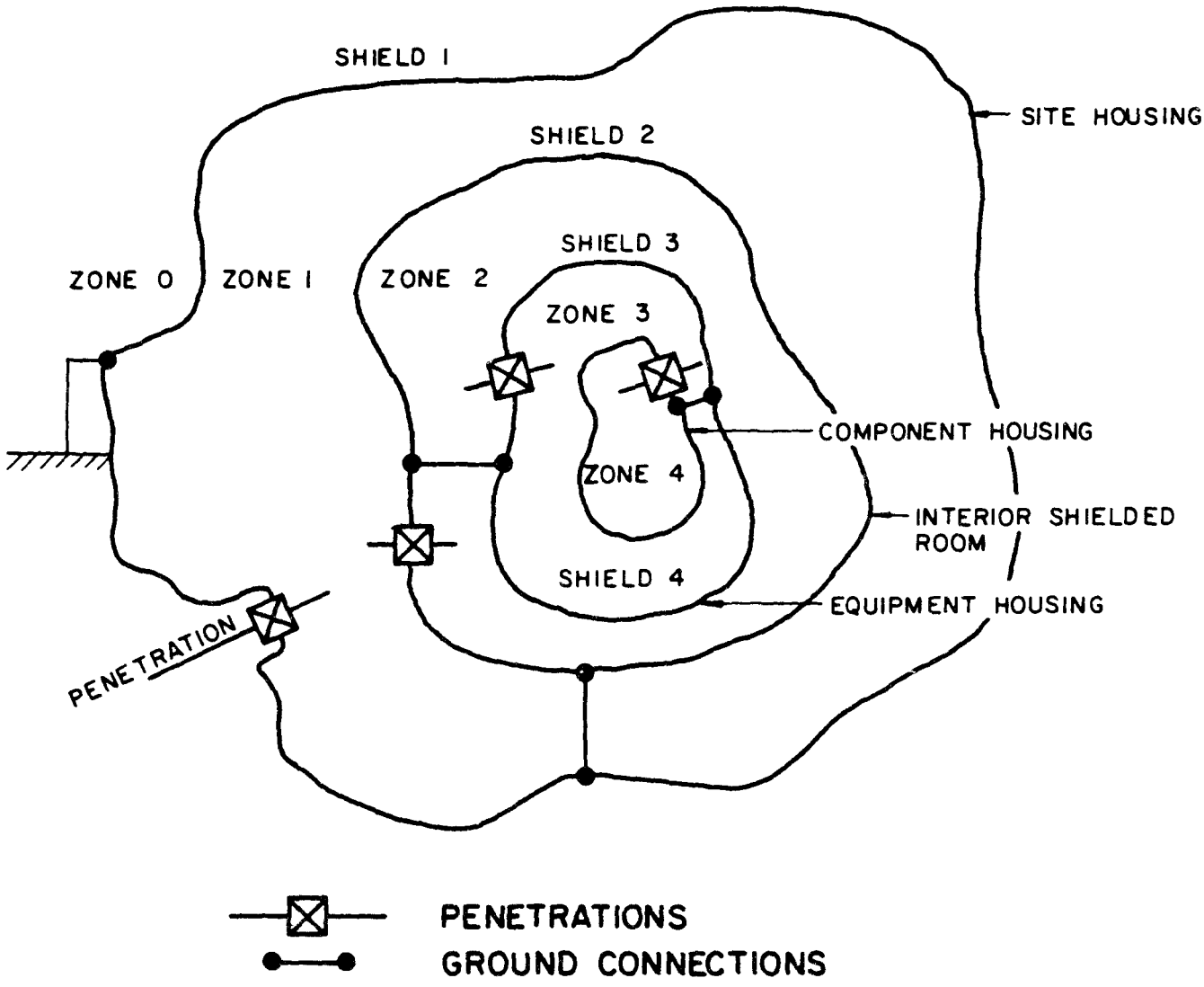

Figure 3-2. Zonal shielding concept.

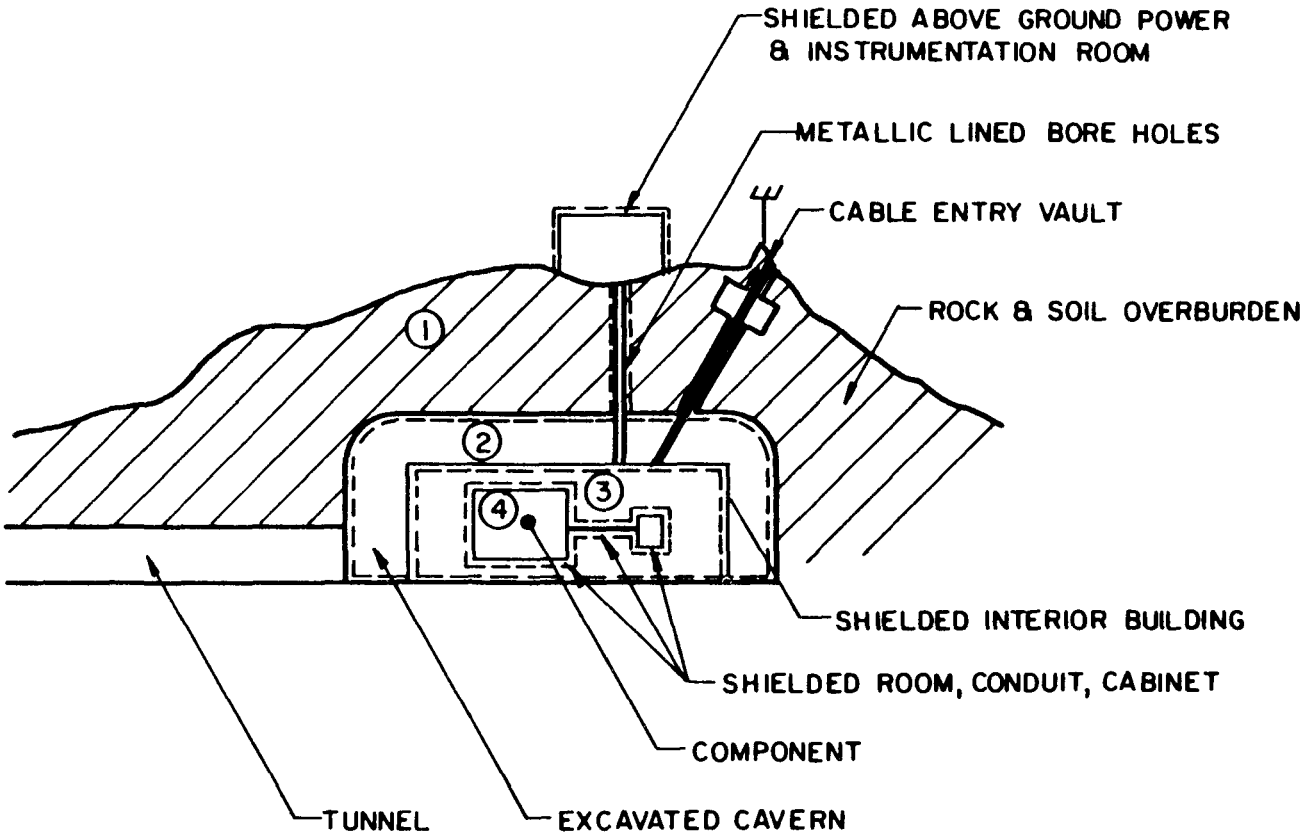

Figure 3-3. Underground facility with four zones.

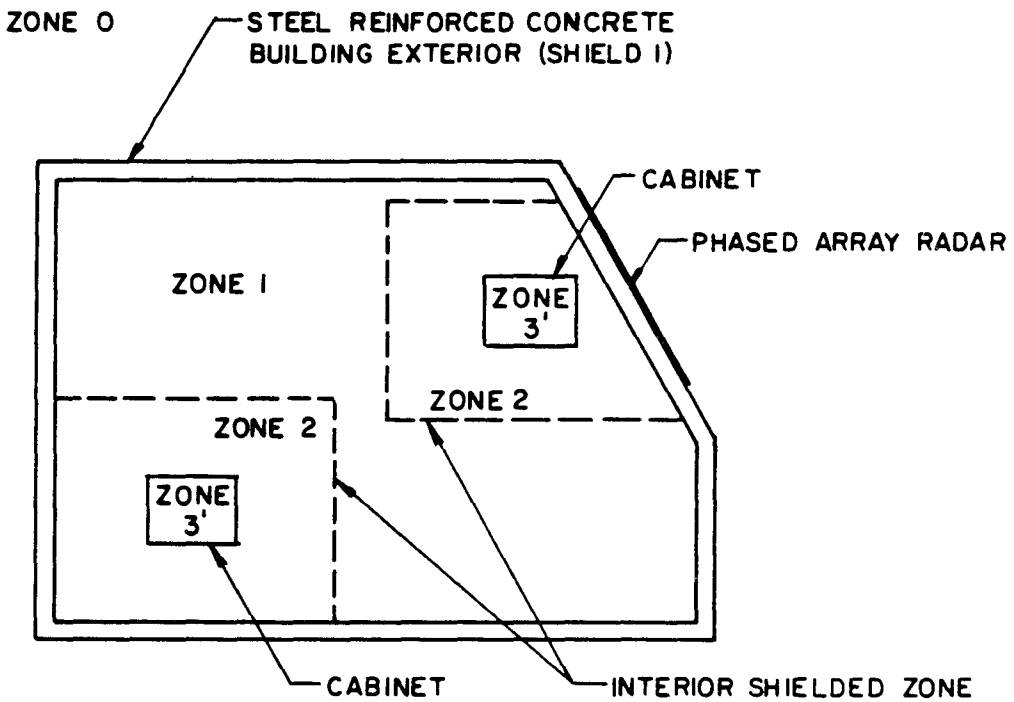

Figure 3-4. Zonal shielding concept with steel-reinforced concrete as shield 1.

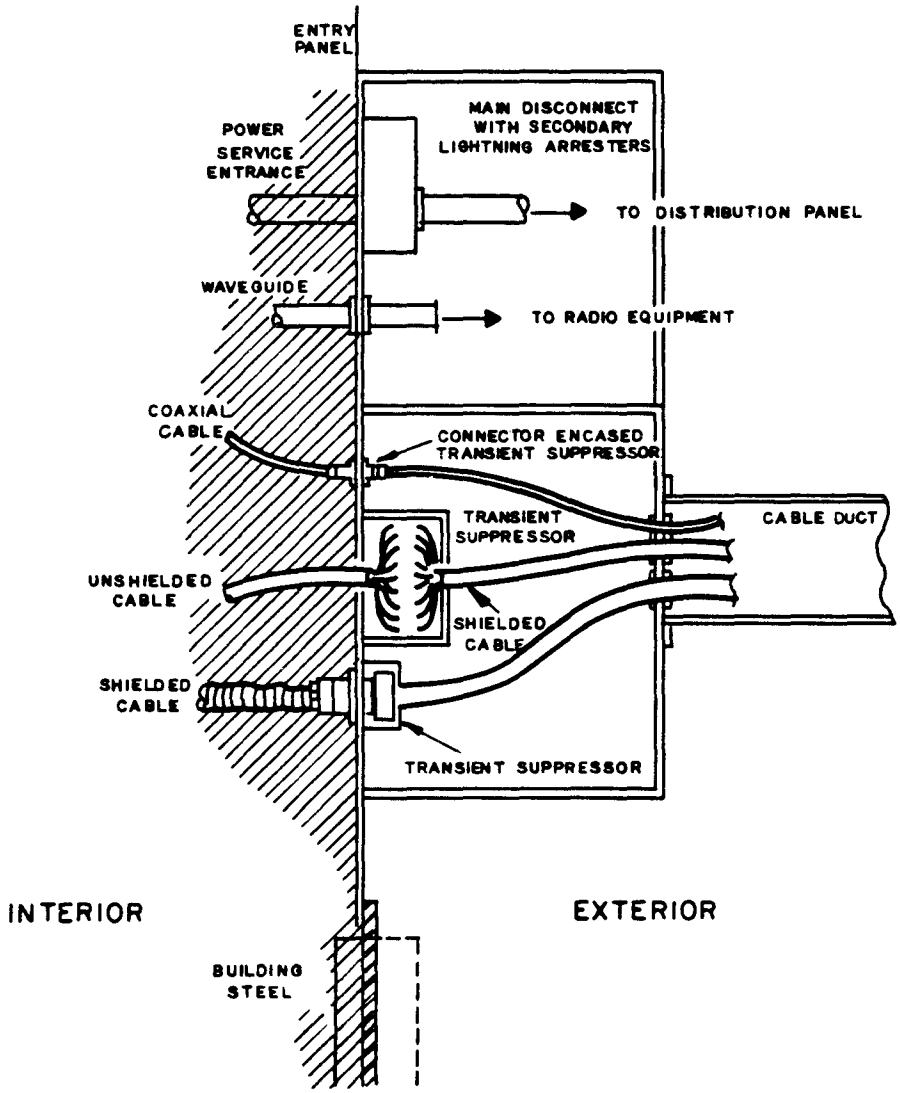

Figure 3-5. Shielded enclosure: cable entry vault.

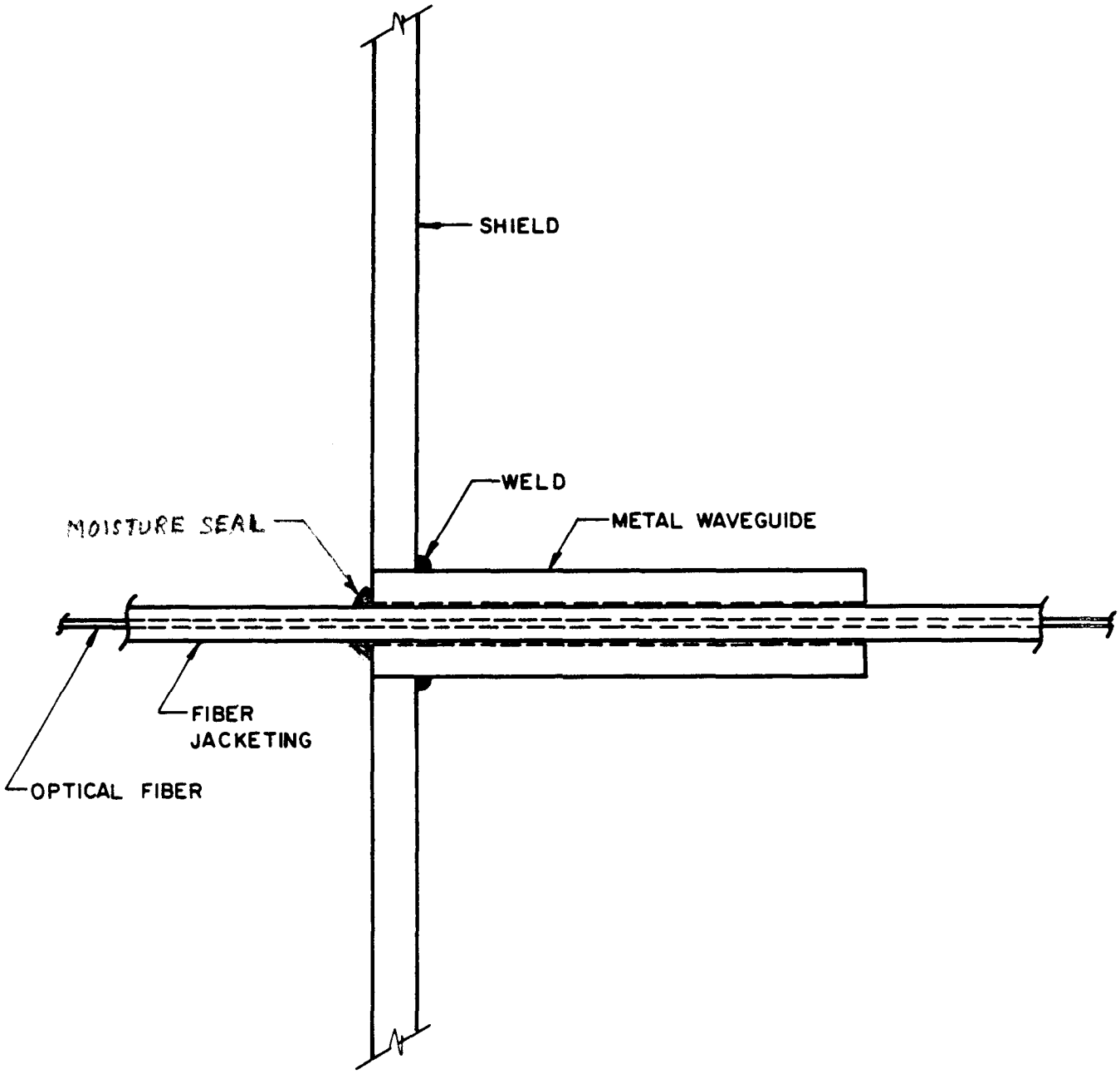

Figure 3-6. Optical fiber shield penetration.