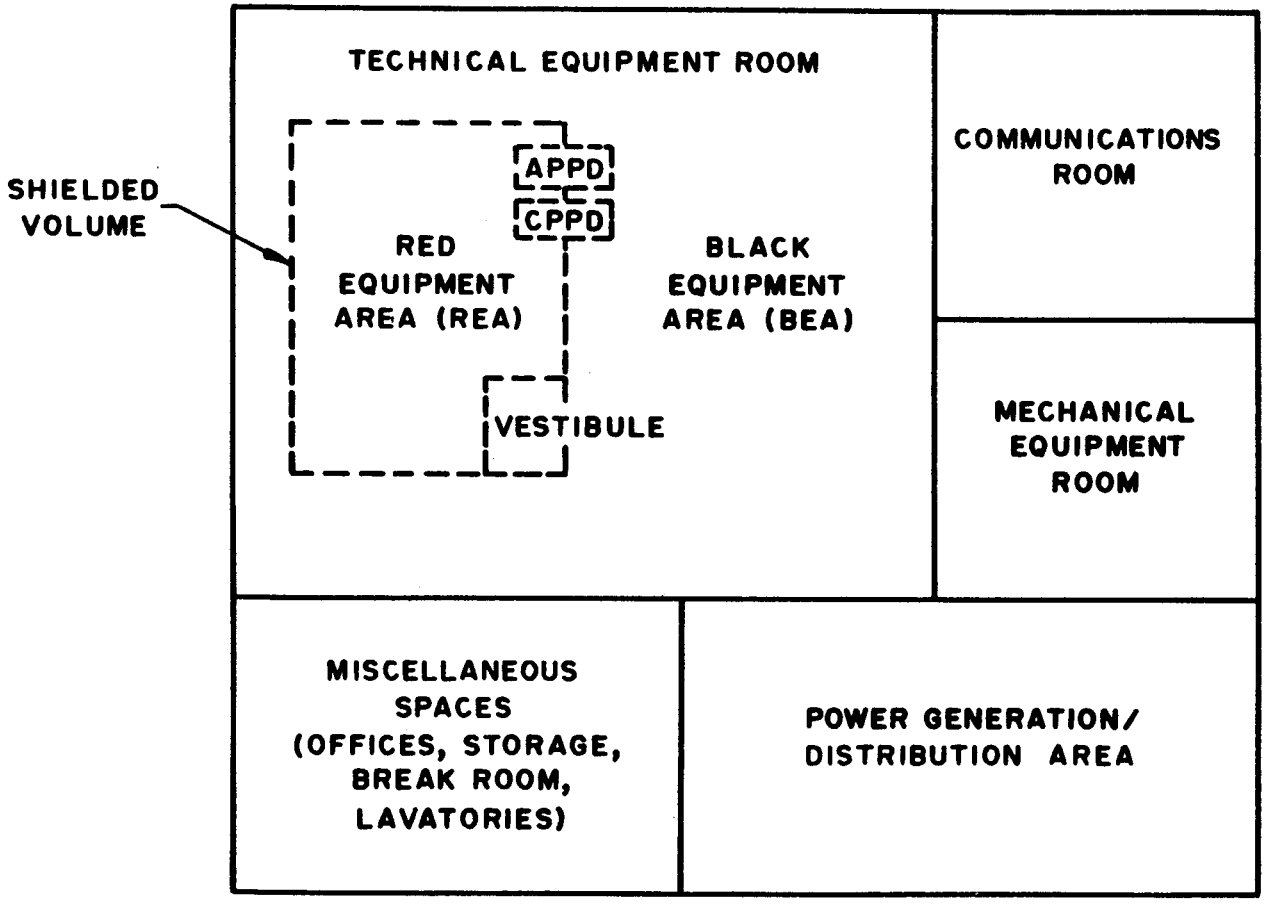

Figure 12-1. Efficient TEMPEST facility floor plan.

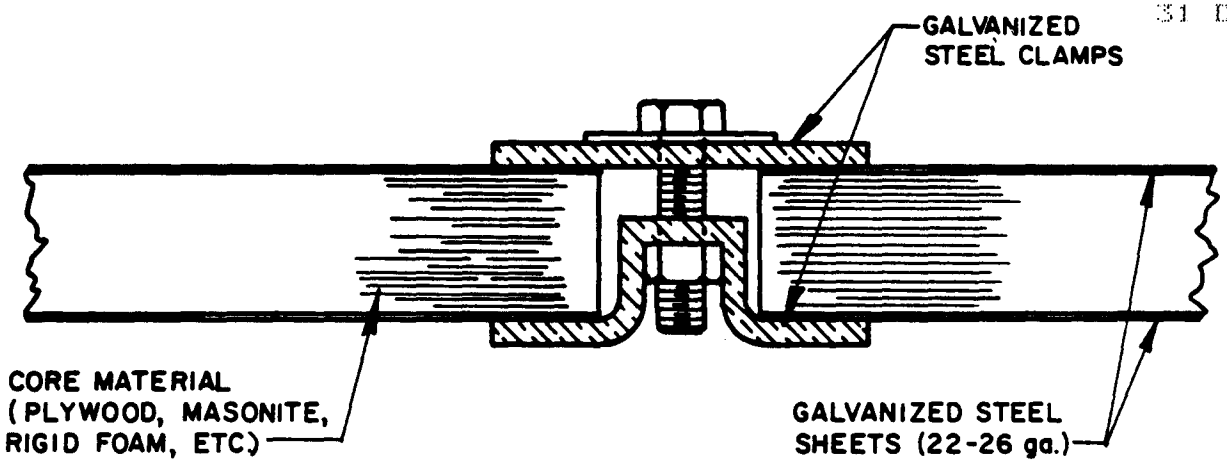

(a)

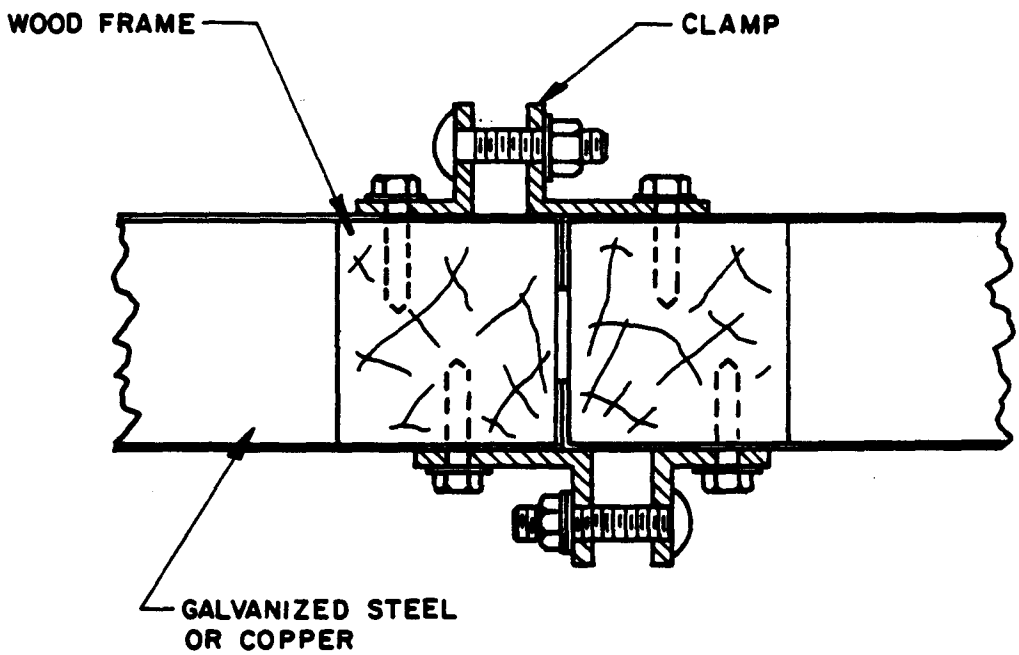

(b)

Figure 12-2. Typical clamped modular shield room joints.

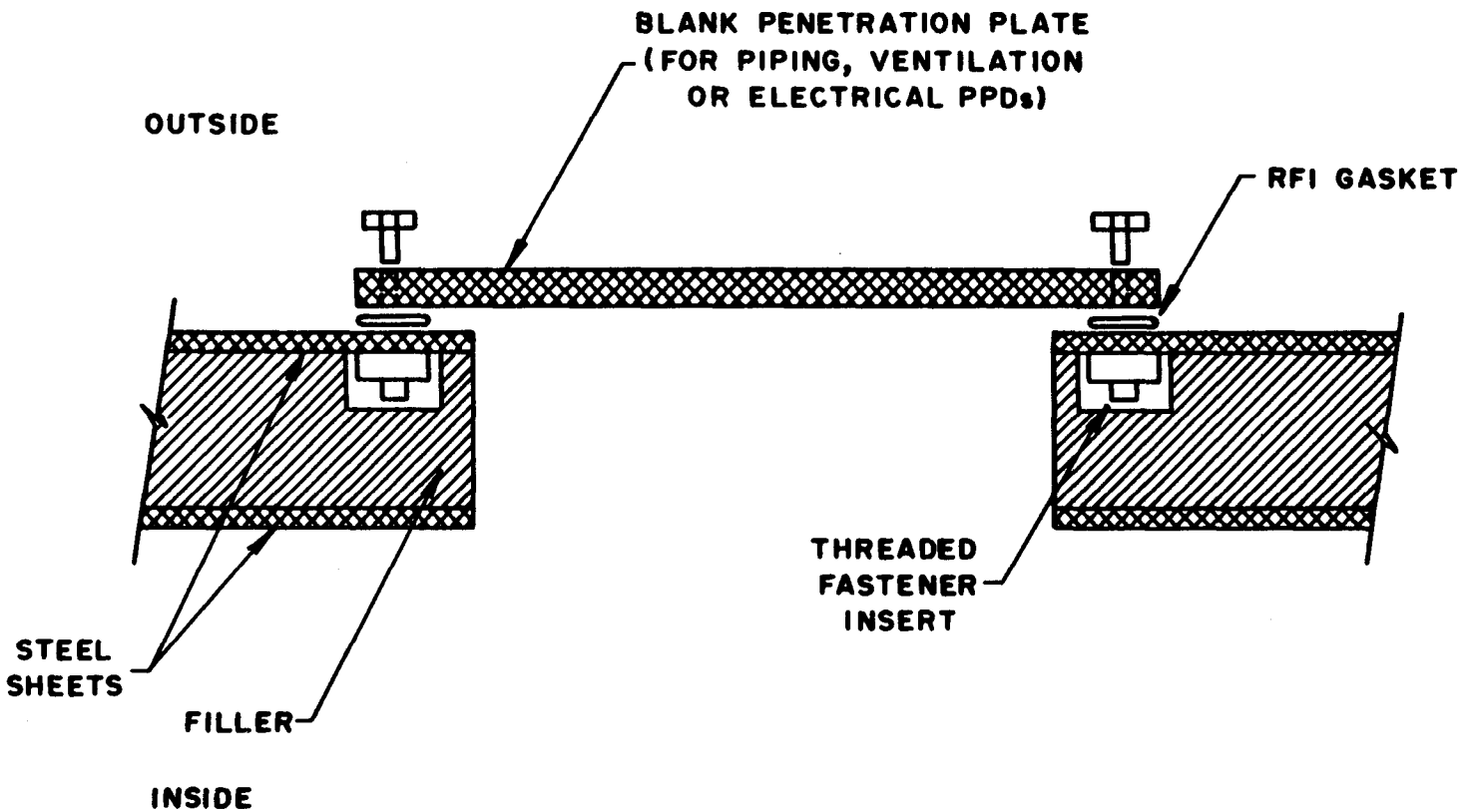

Figure 12-3. Typical penetration panel installation in a modular shielded enclosure.

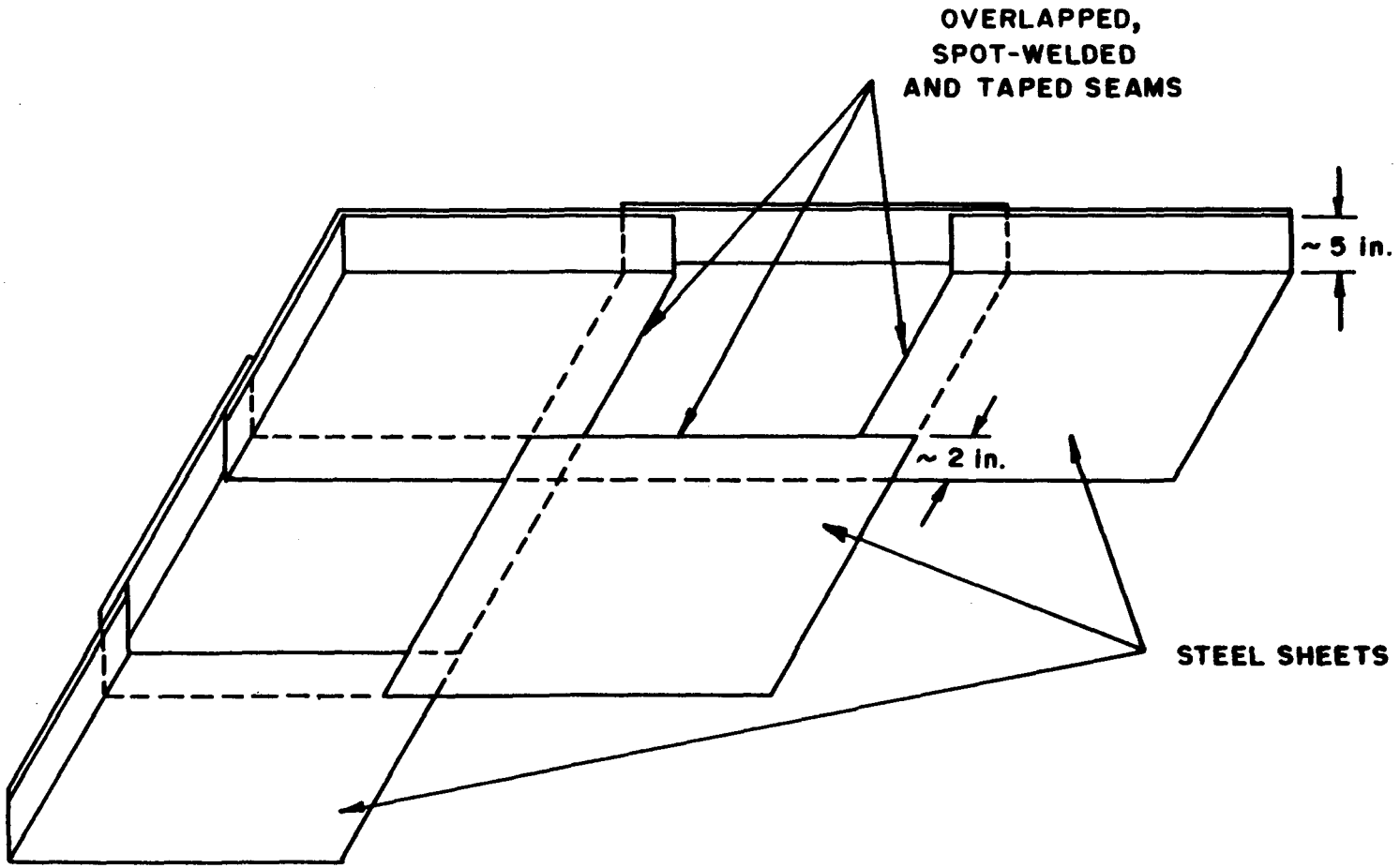

Figure 12-4. Steel plate floor shield design.

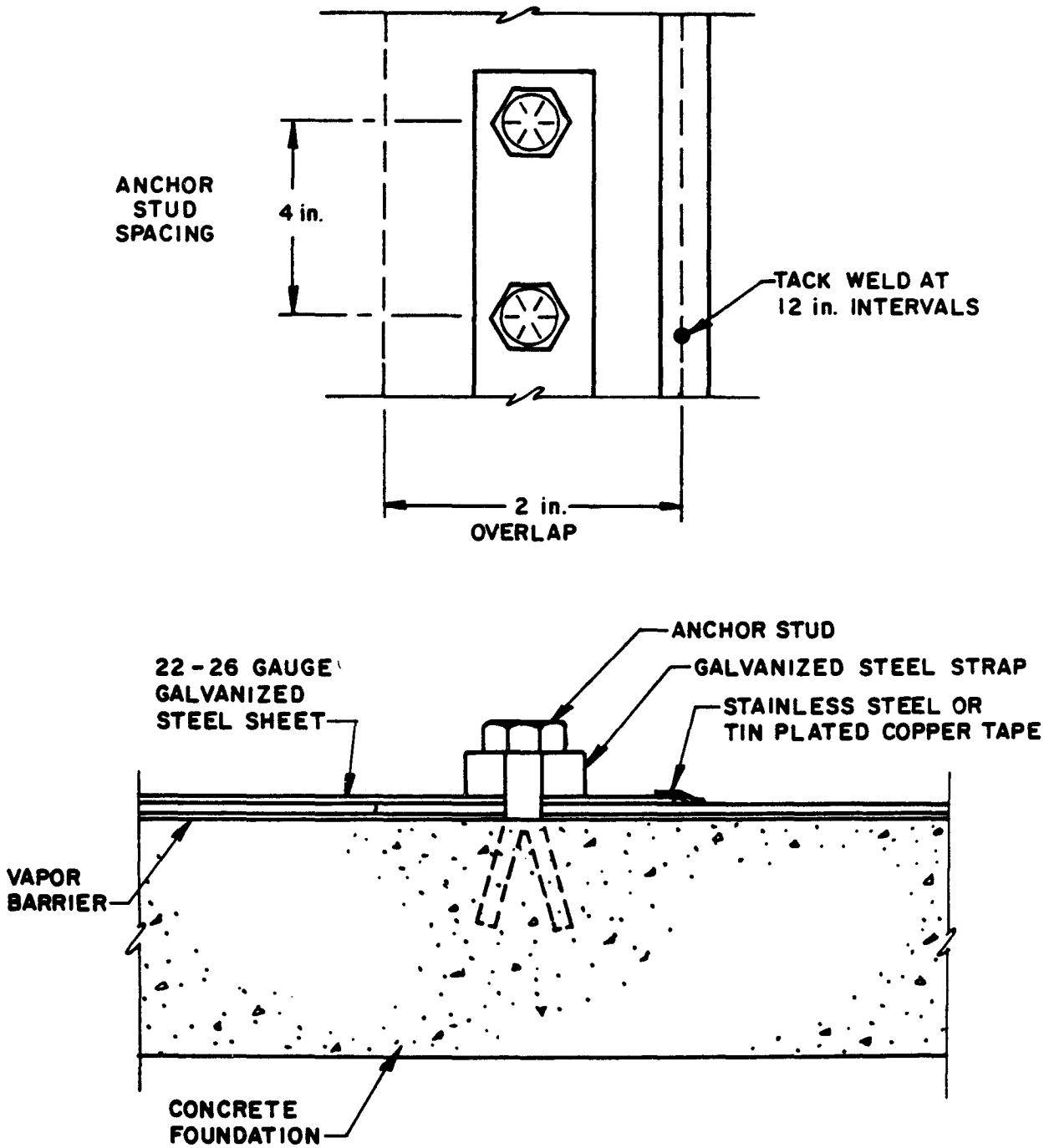

Figure 12-5. Floor plate shield construction technique.

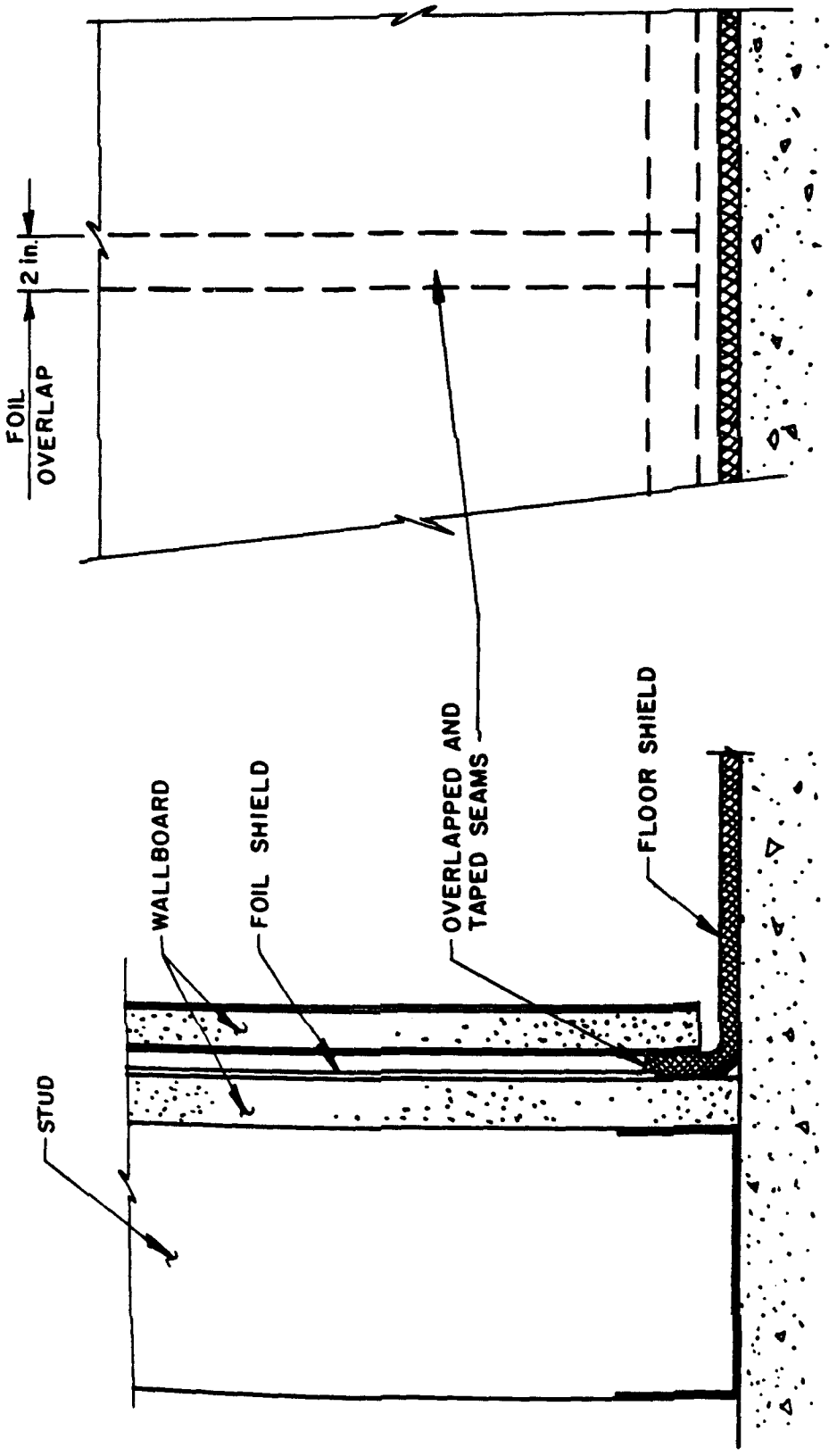

Figure 12-6. Foil wall shield construction technique.

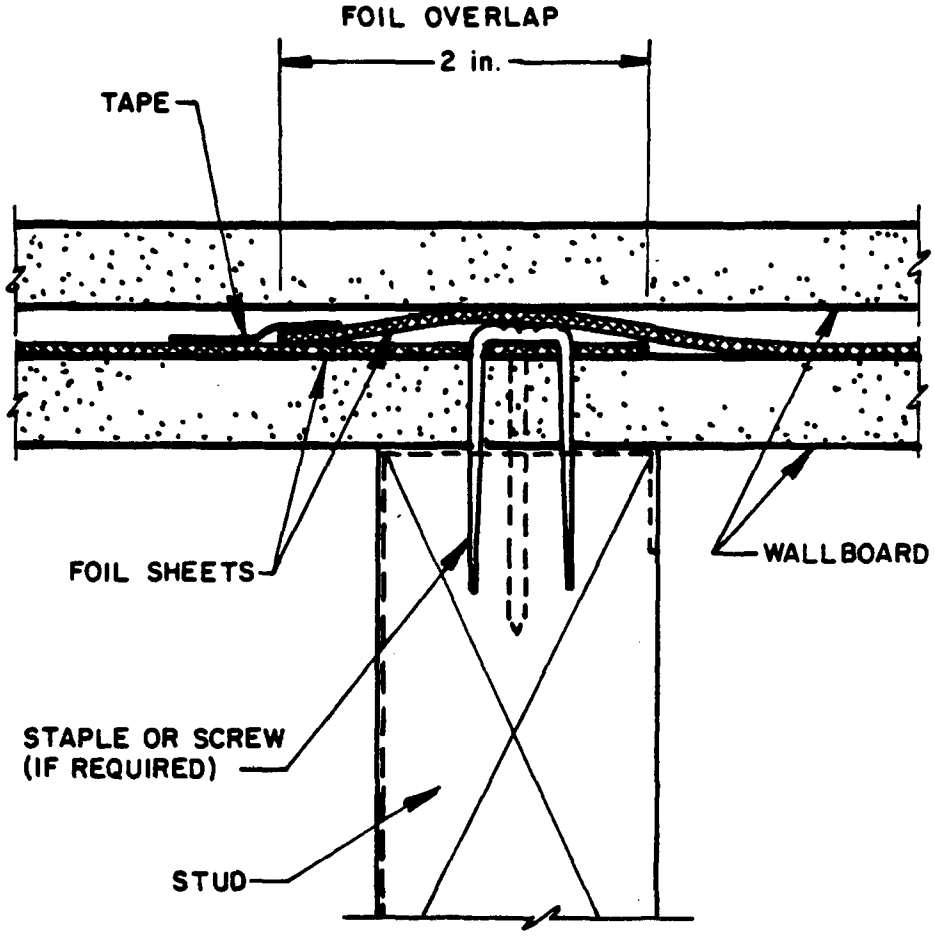

Figure 12-7. Foil/foil seam.

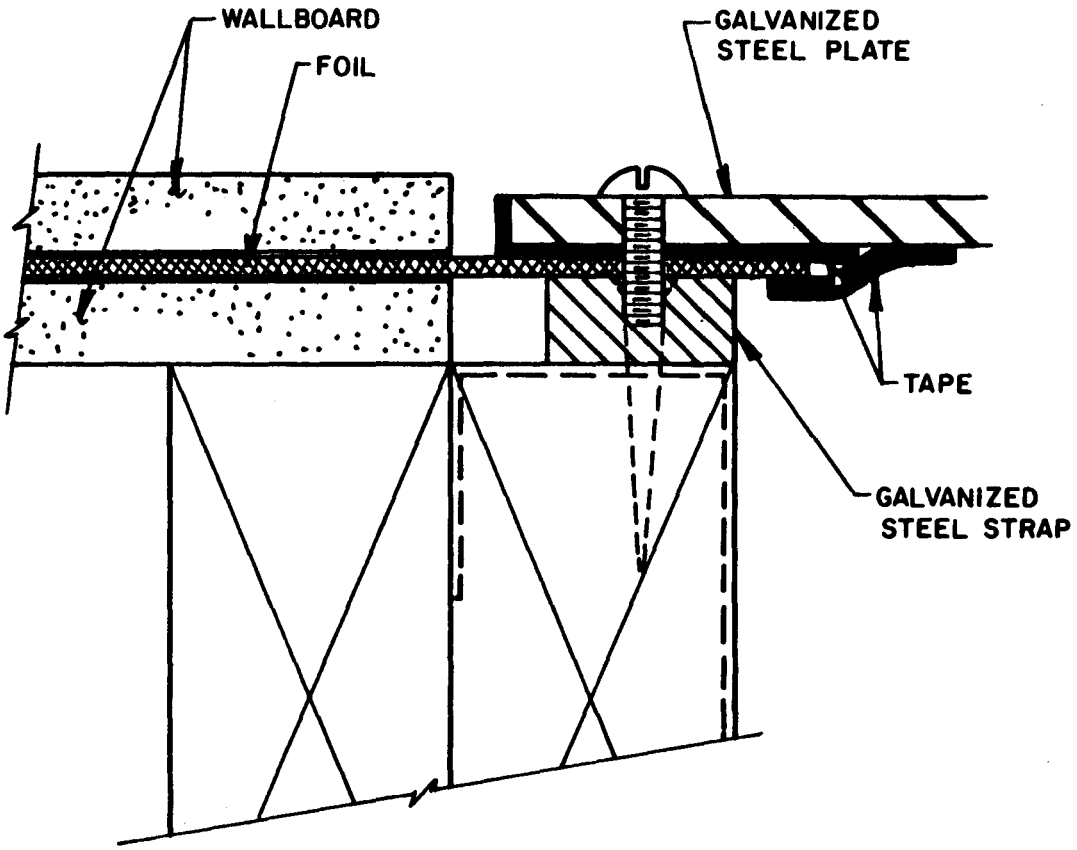

Figure 12-8. Sheet metal/foil seam.

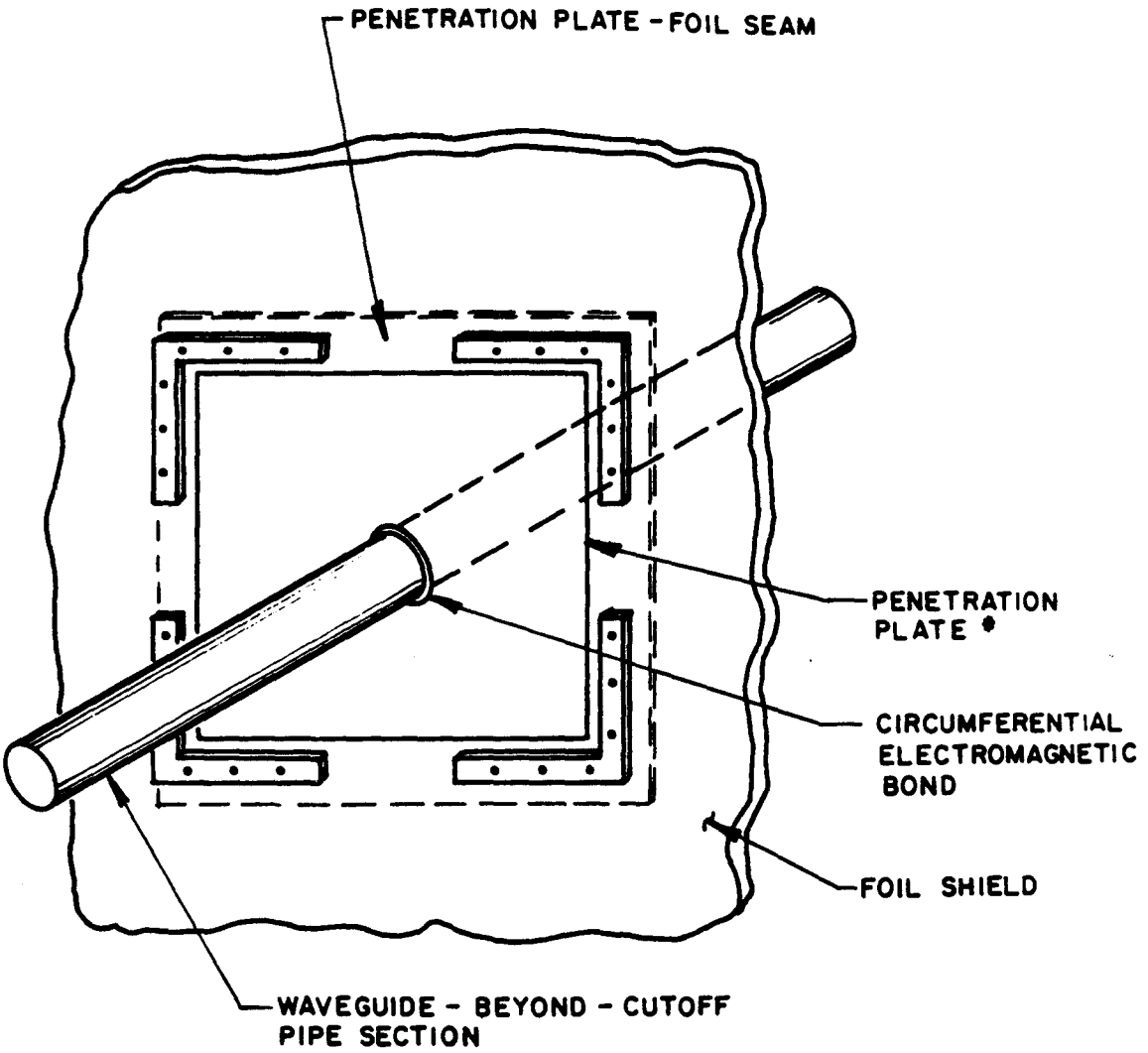

*PROVIDE SUPPORT FOR PENETRATION PLATE AND PIPING FOR MECHANICAL PROTECTION OF THE SHIELD.

Figure 12-9. Foil shield pipe penetration design.