CHAPTER 12

TEMPEST-SHIELDED FACILITIES

12-1. Outline. This chapter is organized as follows:

12-1. Outline
12-2. Introduction
a. Primary emphasis
b. Combining with EMP protection
12-3. Design criteria for 50-decibel facilities
a. TEMPEST-only applications
b. Personnel entryway
c. Emergency exits
d. Mechanical penetrations
e. Electrical penetrations
f. RED and BLACK
12-4. RF shield design for 50-decibel facilities
a. Defining the shielded volume
(1) Limiting extent
(2) Efficient floor plan
b. Shielding materials and joining methods
(1) Small and large volumes
(2) Modular shielded enclosure
(3) Materials
(4) Operating life
c. Design of modular shielded enclosures
(1) Purchased shields
(2) Shield performance
(3) Manufactured panels
(4) Screen enclosures
(5) Penetration panel
(6) On-site assembly
(7) Specifying shields
(8) Shield subassemblies
d. Foil shield construction
(1) Foil shields
(2) Thick sheet metal
(3) Installation costs
(4) Absence of data
(5) Floor shield design
(6) Wall and ceiling shield design
e. Shield quality assurance during construction
12-5. Penetration protection devices
a. 50-decibel vs 100-decibel
(1) Aspect
(2) Filter insertion loss

(3) Joint treatment
(4) Pipes and conduits
(5) Electrical surge arresters
b. Penetration through plates
c. Shield doors
d. Specifying insertion loss
12-6. Cited references
12-7. Uncited reference

12-2. Introduction. This chapter concerns the design and construction of ground-based facilities that require TEMPEST protection in accordance with NSA 73-2A (ref 12-1).

a. Primary emphasis. This chapter addresses facilities that have been specified for 50-decibel (nominal) TEMPEST shielding and penetration protection only.

b. Combining with EMP protection. Because of either the robust nature of the particular equipment that needs protection or a lower allowable hardening confidence level, HEMP protection with 50-decibel (nominal) electromagnetic isolation might be appropriate in selected cases. When this is true, the guidance provided in previous chapters generally will be applicable but may be relaxed. Additional protective features, particularly transient suppression devices for electrical wiring penetrations, may be necessary. Different criteria must be used in choosing the volume to be shielded.

12-3. Design criteria for 50-decibel facilities. There are no fundamental differences in the principles and technical approach between 100-decibel (nominal) shielding and penetration protection and the 50-decibel (nominal) isolation subsystem; only the required performance and implementation practice change. It is still necessary to not only provide an electromagnetic shield on a closed topological surface around the RED equipment area, but also to protect each penetration properly. Special cases, if any, must be identified and treated; RED/BLACK isolation practices must be followed within the shielded volume. Because the required effectiveness in linear (not decibel) units is lower by a factor of about 300, less expensive components and assembly techniques can be used.

a. TEMPEST-only applications. In TEMPEST-only applications, effectiveness requirements for the RF shield are fully defined by calculations performed in accordance with instructions in NACSEM (ref 12-2) or by the attenuation versus frequency curve of figure 8-4 for reasonable worst-case assumptions at CONUS locations. The rest of this chapter assumes that the 50-decibel (nominal) requirement of NSA 73-2A and figure 8-4 applies.

b. Personnel entryway. The main personnel entryway is to be a two-door shielded vestibule. The effectiveness requirements for the vestibule shield and doors are the same as those for the primary shield (fig 8-4). A principal argument in favor of a waveguide tunnel entrance was the difficulty in

maintaining performance of high-quality shielded doors; therefore, this more costly arrangement is not justified and is not recommended in 50-decibel (nominal) applications.

c. Emergency exits. Where entrances will be used seldom or at irregular intervals, such as emergency exits or equipment accesses, single-shielded doors that meet the attenuation of figure 8-4 should be used.

d. Mechanical penetrations. Piping and ventilation penetrations are to be protected by waveguide-beyond-cutoff techniques so as to preserve the performance of the primary shield. Based on TEMPEST attenuation requirements, the maximum dimension of the waveguide is 10.2 centimeters for 1 gigahertz and 1.0 centimeter for 10 gigahertz. Waveguide length can be reduced to three times the transverse dimension to obtain 50 decibels attenuation. Dielectric breaks are required in these TEMPEST-only applications.

e. Electrical penetrations. Power, telephone, and other audiofrequency electrical circuits that penetrate the primary shield are to be protected by filter assemblies. Electrical surge arresters are not required for TEMPEST protection but may be desirable for lightning or power line transient suppression. The filters must provide at least 50 decibel insertion loss from 14 kilohertz to the specified highest frequency, measured in accordance with MIL-STD-220A test procedures (ref 12-3). Appropriate penetration protection devices must also be provided for penetrating electrical wires with nominal operating signals in the protection range.

f. RED and BLACK. The shielded volume should contain only RED equipment; however, it is seldom possible to completely exclude BLACK circuits. The RED/BLACK isolation guidelines of NACSIM 5203 must therefore be followed (ref 12-4).

12-4. RF shield design for 50-decibel facilities.

a. Defining the shielded volume. Communication security interests will be best served and the most cost-effective TEMPEST design will be achieved by limiting the extent of the shielded volume to the minimum size needed for protection of the RED equipment. This objective is the major conceptual difference from a HEMP-hardened design, for which the preferred practice is to enclose as much mission-critical equipment as possible.

(1) Limiting extent. The cost of the shielding and penetration protection subsystem can be most strongly influenced during the layout of the facility floor plan. The RED equipment to be shielded should be concentrated into a single, minimum-size area consistent with system growth requirements. BLACK equipment should be placed in a physically separate location rather than intermixed with the RED hardware. This layout will enhance TEMPEST performance by minimizing the potential for cross-coupling of classified data into BLACK circuits. The cost of electromagnetic protection will also be reduced as follows:

(a) The size of the shielded volume will be minimized (shielding costs are approximately proportional to the shield surface area).

(b) A relatively small number of shield penetrations and penetration protection devices will be required.

(c) Costs for implementing the RED/BLACK isolation will be reduced.

(2) Efficient floor plan. In summary, it is seldom necessary to shield an entire facility for communications security alone. Assistance from the procuring agency and/or using organization should be obtained to create an efficient floor plan such as that shown in figure 12-1. When a large fraction of the building volume must be protected, exceptions will occur; however, this case will be unusual.

b. Shielding materials and joining methods. For high-level 100-decibel (nominal) attenuation of radiated electromagnetic fields, a continuously welded 10-gauge steel liner integrated into the facility structural design is the preferred approach. For installations that require only 50-decibel (nominal) TEMPEST isolation, however, less expensive shielding techniques are available for consideration.

(1) Small and large volumes. The most cost-effective shielding solution will depend on the type of system to be protected. Small- and large-volume cases can be identified as--

(a) Small volumes are shielded enclosures that do not require integration of the shield into the overall facility structure.

(b) Large volumes are shielded areas that occupy a major fraction of the facility and probably require integration into the structural design.

(2) Modular shielded enclosure. If the hardware to be shielded can be collected into a relatively small RED Equipment Area (REA), as shown in figure 12-1, the easiest, most cost-effective shielding approach is to install a free-standing manufactured modular shielded enclosure. This eliminates design complexity because the shield and structural designs are nearly independent, and also greatly simplifies construction. Cost savings accrue from these simplifications.

(3) Materials. When very large volumes must be shielded, it becomes cost-effective to integrate the shield into the overall design for the floors, walls, and ceilings. In these cases, the shield can be constructed using either thin (22- to 26-gauge) galvanized steel or copper sheets, or copper or stainless steel foils. A design solution is, in fact, a combination of these methods--galvanized steel sheets for the floor shield and copper or stainless steel foils for the walls and ceilings. The seams are RF-sealed with bolted

straps, special metallic tapes having conductive adhesives, or solder (for copper foils).

(4) Operating life. The sparse amount of life-cycle data on the performance of modular shielded enclosures suggest that 50-decibel (nominal) attenuation can be sustained for many years with a reasonable maintenance program. The data are unfavorable for 100-decibel (nominal) applications. However, while shielding vendors claim long life for foil shields, no well documented published data have been found to support this assertion. Still, it should be possible to maintain a foil shield at the nominal 50-decibel level during the operating life. To do this, easy access for inspection of the foil should be designed into the facility.

c. Design of modular shielded enclosures. Modular shielded enclosures in sizes up to about 93 square meters of floor area are commercially available from the standard product lines of numerous shielding suppliers. Prices for these enclosures vary with the dimensions of the room and the number and type of penetration panels. Typical figures at 1985 price levels are about $28/square foot (total shield surface area), or $90/square foot of floor area. These amounts include the cost of doors.

(1) Purchased shields. Custom-designed, modular shielded enclosures of larger size can also be purchased. The special design aspects are mainly structural in nature and can increase the cost per unit area as much as 40 percent.

(2) Shield performance. Nearly all of the modular shielded enclosures in today's market are designed to comply with the shielding effectiveness requirements of NSA 65-6 (ref 12-5) and will initially provide 100 decibels (nominal) performance. The sparse amount of data on life-cycle attenuation indicate the performance may quickly drop below the 100-decibel level, but (with the possible exception of the doors) should remain above the 50-decibel (nominal) requirement for many years with a program of reasonable maintenance.

(3) Manufactured panels. A shielded enclosure is typically assembled from premanufactured panels made of plywood, masonite, rigid foam, or a similar filler and clad with 22- to 26-gauge galvanized steel sheets. A dimensionally stable filler is required to preserve shielding effectiveness, so that plywood is somewhat suspect in this regard. Seams between adjacent panels generally cannot be welded because of the thin metal sheets and the heating effects on the filler material. Clamped joints, such as those shown in figure 12-2, are most common.

(4) Screen enclosures. Modular screen enclosures that satisfy these shielding effectiveness requirements are also available as standard commercial products. The panels are made of 8 to 10 wire/centimeter copper, bronze, or other metallic screen which is placed on both the inner and outer surfaces of a wooden frame. Normally, electrical isolation between the two screens is maintained. The panels bolt together to form the enclosure. The main

advantages of screen enclosures are simplified ventilation requirements and light weight. The most serious problems are the fragility of the screen and the unrestricted light and sound passage through the walls. The latter problem implies that physical controls and personnel security clearance/need-to-know requirements in areas around the shield should be the same as those required within the shielded volume.

(5) Penetration panel. Figure 12-3 shows a typical installation for a penetration panel. As can be seen in this figure, it is the outer sheet of a panel that is usually employed for the continuous electromagnetic barrier. However, whether the inner or outer sheet is chosen to be the shield is not important as long as the surface selected is topologically maintained.

(6) On-site assembly. On-site assembly of the prefabricated elements can be completed in a relatively short period of time.

(7) Specifying shields. During the design and construction phases, a modular shielded enclosure can be treated essentially as an off-the-shelf commercial product. However, while detailed drawings are not required, the design must explicitly and carefully specify essential characteristics and quality assurance provisions, including the following:

(a) For proper shielding effectiveness, it is recommended that the manufacturer's advertised design attenuation be specified when it exceeds 50 decibels, rather than using the shielding effectiveness-versus-frequency curve shown in figure 8-4. This will allow a large margin for in-service degradation without incurring a significant cost penalty.

(b) The overall length, width, and height of the shielded enclosure shall be listed in the specifications.

(c) The requirement for and location of the vestibule entrance shall be specified. It should be stated explicitly that the shielding effectiveness requirement applies when one vestibule door is open and the other door closed.

(d) The size and location of other shielded doors shall be listed in the specifications.

(e) The number, size, and location of penetration panels shall be listed on the construction drawings.

(f) Detailed shop drawings shall be used by the prime construction contractor when installing all interfaces to the shield.

(g) Immediately after the shielding vendor completes the installation, testing for compliance with the shielding effectiveness requirement shall be performed. The NSA 73-2A shielding effectiveness measurement procedures shall be used.

(8) Shield subassemblies. This discussion has dealt only with the shielding, shield doors, and blank penetration panels. Virtually all shielding vendors can also provide finished piping, ventilation, and filter (ESA, if required) assembly penetration panels. These subjects will be addressed later in this chapter for 50-decibel (nominal) applications. Furthermore, most modular shield enclosure vendors can provide much of the installation work unrelated to the shielding and penetration protection performance. (This information is provided only for the convenience of designers, as the support subsystems are not areas of interest in this manual.) Examples include the following:

(a) Interior finishing, including raised flooring, suspended ceilings, and interior partitions.

(b) Interior electrical distribution subsystems.

(c) Interior lighting subsystems.

(d) Interior heating, ventilation, and air-conditioning (HVAC) subsystems.

(e) Interior hangers and supports that do not create shield penetrations.

d. Shield construction. Two methods of shield construction are addressed in this paragraph.

(1) Foil shields. The first method uses stainless steel foil, from 0.05 millimeter to 0.2 millimeter thick, or copper foil, from 0.1 millimeter to 0.2 millimeter thick, to form the electromagnetic barrier. The foils can be applied to wallboard using a standard adhesive similar to installing wallpaper or other supporting material using nails/staples. The seams are usually closed by overlapping the foils, clamping, soldering, and sealing with a special conductive tape or by using a combination of these methods. In some instances, several layers of foil are applied. Another layer of wallboard is normally used as an overlay material to protect the fragile shielding material.

(a) Recent developments in foil shield technology include foils that are actually paper with impregnated fibers to improve tear resistance; solder-backed copper tape to which heat can be applied when used to tape a seam of a copper foil shield to form a joint of very low resistivity; and tin-plated copper tape that is used to reduce corrosion and improve compatibility between dissimilar metals.

(b) Copper-clad steel foils with improved low-frequency field attenuation properties are also available. Their performance greatly exceeds the requirements of this application, however. Therefore, they increase

shielding costs in two ways--higher material costs and increased labor because the foil is made in relatively narrow widths.

(2) Thick sheet metal. The second method of shielding construction uses a thicker sheet metal, often in the range from 22-gauge (0.75 millimeters) to 26-gauge (0.45 millimeters). The advantage of this material is reduced risk of damage from incidental contact. The sheets for a floor shield can be simply laid on a vapor barrier over a concrete slab. Sheets for a wall or ceiling shield are nailed in place. The joint between galvanized steel sheets is made by overlapping (with or without tack welds) and using conductive epoxy between sheets and/or taping over the seam. The steel sheets also can be joined using straps similar to those for clamping modular panels. Copper sheets are joined by overlapping and clamping, taping, or soldering.

(3) Installation costs. Cost figures quoted by vendors for installing foil and thin-sheet metal shields can be very deceptive and must be qualified carefully. If the general contractor provides the complete wall except for the shield material, the shielding subcontractor's material and labor costs may be as low as $6/square foot (1985 prices) of shield surface area. Total price for construction, without the interior finish and without the doors, may be about $20/square foot (1985 prices) of surface area.

(4) Absence of data. In the absence of a well documented data base on life-cycle performance, selection of the preferred foil/thin sheet metal shielding method is somewhat intuitive. Throughout the rest of this discussion, therefore, supporting arguments are given for the methods presented.

(5) Floor shield design. Sheet metal floor shield is recommended for most floor shield designs because of the high stresses placed on the floor shield and the extreme difficulty in effecting repairs after the facility is operational. In unusual cases, such as a temporary facility with a short useful lifetime, a foil shield floor can be used.

(a) The basic shield materials are 22- to 26-gauge galvanized steel sheets in the largest available and most convenient to handle size. Sheets to be used at the edges of the floor shield should be bent upward to form a vertical section about 10 centimeters to 20 centimeters high for interfacing with the wall shield. The sheets should be laid on a vapor barrier over the concrete floor slab so that adjacent sheets overlap by approximately 5 centimeters, as indicated in figure 12-4.

(b) Figure 12-5 shows the suggested methods for treating floor shield seams. As noted, the sheets should be secured in place with either a clamping strap or periodic tack welds. The strapping technique, which is preferred in high-humidity environments or in cases for which a wear slab is to be poured over the floor shield, uses galvanized steel bars held in place by anchor studs fired into the foundation through the sheet metal. Strapping need not be continuous, but must be sufficient to ensure good surface contact

between the sheets. Under less corrosive conditions, periodic tack welds can be used for this purpose. The accessible seam is then taped continuously with stainless steel or tin-plated copper tape that has a conductive adhesive.

(c) If a wear slab is to be poured, a second vapor barrier will be laid over the floor shield. The height of the vertical lip at the floor/wall interface will be chosen to allow at least 7.5 centimeters above the top of the slab.

(6) Wall and ceiling shield design. A copper or stainless steel foil shield (or sheet metal shield similar in design to the floor) is recommended for use with wall and ceiling shield design and construction. Aluminum foils are also available but should not be used because of the potential for surface oxidation. Foils backed by paper with impregnated fibers are preferred over bare foils because of improved resistance to tearing.

(a) The wallboard area to be shielded should be flat and free of protrusions. Careful measurements should be taken and a section of foil should be precut and test-fitted before applying the adhesive. The adhesive should then be trowled onto the wallboard and the foil should be installed in the same way as wallpaper is hung. The sheet should then be worked and smoothed to eliminate air bubbles and wrinkles.

(b) As an alternative, the foil can be installed by stapling or nailing to the wallboard or studs. If this technique is used, the head of the nail or staple should be covered by overlapping foil or tape. Long-term reliability of stapled or nailed foil should be considered questionable.

(c) Bare foils should be overlapped by approximately 5 centimeters; foils which are nonconductively backed (e.g., with paper backing) should be butted rather than overlapped. Seams should then be taped with a compatible metal tape having a conductive adhesive. Copper foil seams should be RF sealed using the solder-coated tape (figs 12-6 through 12-8).

(d) In two areas--at the wall/floor shield joint and at penetration points--the foil shield must interface with the galvanized steel plate. Seams in these locations should be formed as shown in figure 12-8. When copper foil has been used, the overlap area of the steel plate should first be covered with a tin-plated copper tape having conductive adhesive to reduce the potential for galvanic action. The joint should then be clamped and taped as shown.

(e) A second wallboard should then be installed to protect the fragile shielding material.

(f) Foil shields are particularly susceptible to damage when mounting equipment or installing the interior finish because the shield layer offers no resistance to nails and screws. Extreme care must be exercised during both construction and operation to avoid unintentional shield

penetrations. This fact shall be emphasized strongly in the shield maintenance procedures.

e. Shield quality assurance during construction. The need for quality assurance during construction of a 50-decibel shielded facility is the same as that described for construction of a welded steel shield. A shielded enclosure leak detection system (SELDS) checking program is to be used during assembly and NSA 73-2A SE testing shall be used for acceptance. Two NSA 73-2A tests shall be performed. Preliminary measurements shall be made immediately after the RF shield has been closed to avoid costly repairs later and attendant schedule delays. After all equipment and finishes are in place and all other work with the potential to affect shield performance has been completed, the final acceptance test shall be performed.

12-5. Penetration protection devices.

a. 50-decibel vs 100-decibel. Designs for penetration protection devices (PPDs) to be used in 50-decibel (nominal) TEMPEST-only shielded facilities are very nearly the same as those for 100-decibel (nominal) HEMP/TEMPEST shielded buildings. The major differences are performance requirements and the fact that the shield is structurally much weaker and, therefore, the support for the penetration panels must be provided by other mechanical elements. Additional variations include the following:

(1) Aspect. The aspect (minimum length to maximum transverse dimension) ratio for waveguide-beyond-cutoff piping and ventilation penetration protection can be reduced to 3:1.

(2) Filter insertion loss. The filter insertion loss requirements are lower.

(3) Joint treatment. Overlapped, clamped, and taped joints are permitted as described in the preceding paragraph while 100-decibel (nominal) performance demands circumferential welds between the penetration panel and bulk shield.

(4) Pipes and conduits. Pipe and conduit penetrations can be made with compression fittings and threaded joints rather than circumferential welds.

(5) Electrical surge arresters. ESAs are not required on electrical penetrations.

b. Penetrations through plates. The penetrations should be made through heavy galvanized steel panels, which serve the dual function of spreading the surface currents and simplifying the interface to the bulk shield. The approach for a piping penetration is shown in figure 12-9. Honeycomb panel and conduit penetrations are done using a similar method. For rigidity, the penetration plate will be from 6.2 millimeters to 12.5 millimeters thick and

will have a clear area of about 15.2 centimeters wide around the periphery for interfacing with the bulk foil shield.

c. Shield doors. Knife-edge or magnetically sealed shield doors and frames shall be used for continuously attended enclosures rather than designs with exposed contact fingers to avoid accidental damage to the RF seal.

d. Specifying insertion loss. One final word of caution is appropriate. An insertion loss of 50 decibels can generally be expected with single-stage (three-element) filters, and these devices can have far more drastic performance variations with changes in the load impedance than three-stage (seven-element) 100-decibel (nominal) filters. It is recommended, therefore, that insertion loss be specified and measured over the range of load impedances that will be experienced during nominal operation.

12-6. Cited references.

12-1. National Security Agency (NSA) Specification No. 73-2A, Specification for Foil RF Shielded Enclosure (NSA, 15 November 1972).

12-2. National COMSEC/EMSEC Information Memorandum (NACSEM) 5204, (U) Shielded Enclosures (NSA, January 1979) (C).

12-3. Military Standard (MIL-STD) 220A, Method of Insertion-Loss Measurement (Department of Defense [DOD], 15 December 1959).

12-4. NACSIM 5203, (U) Guidelines for Facility Design and RED/BLACK Installation (NSA, 30 June 1982) (C).

12-5. NSA Specification No. 65-6, Specification for RF Shielded Enclosures for Communications Equipment: General Specification (NSA, 30 October 1964).

12-6. Uncited reference.

National COMSEC Information Memorandum (NACSIM) 5100A (U) Compromising Emanations Laboratory Test Requirements, Electromagnetics (NSA) (C).

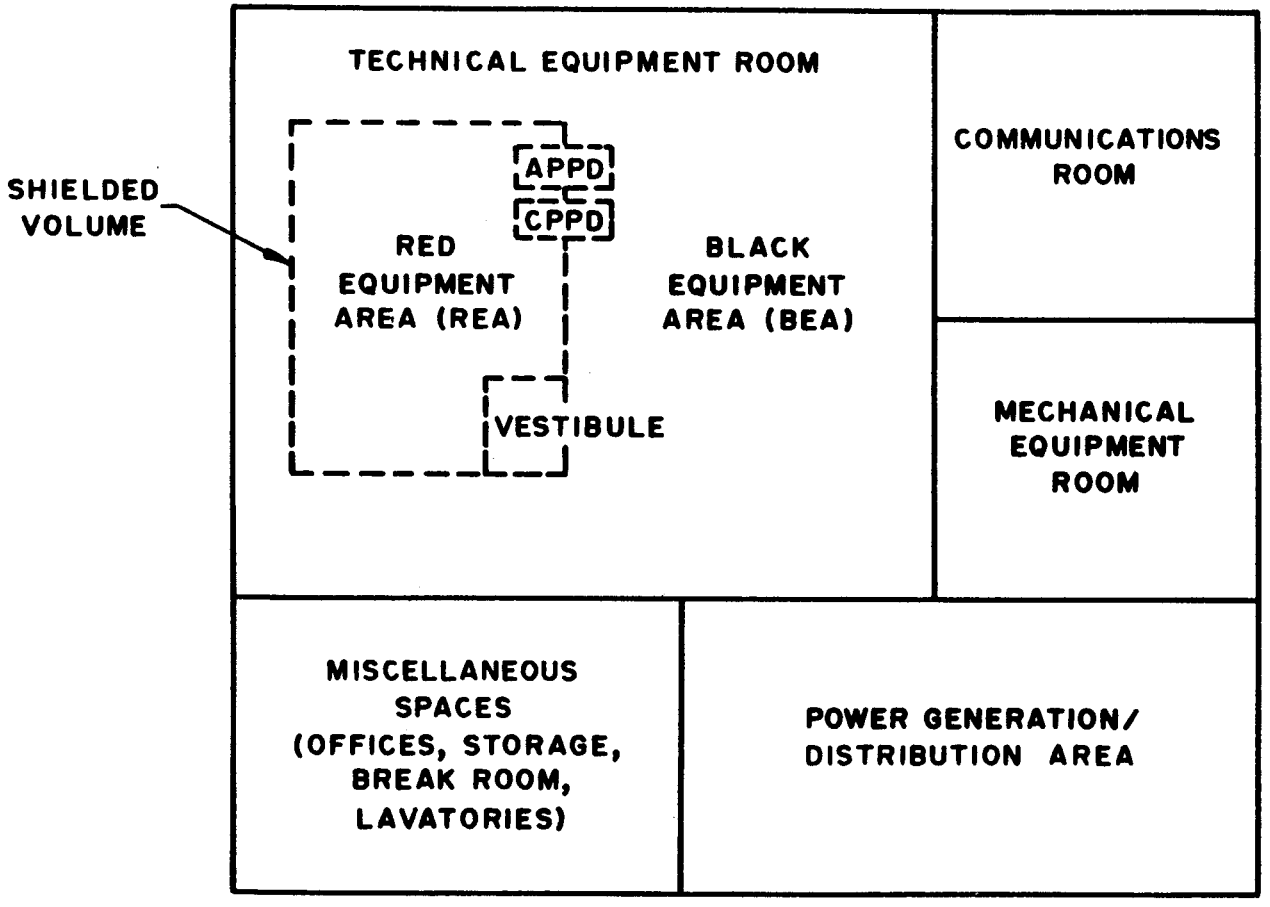

Figure 12-1. Efficient TEMPEST facility floor plan.

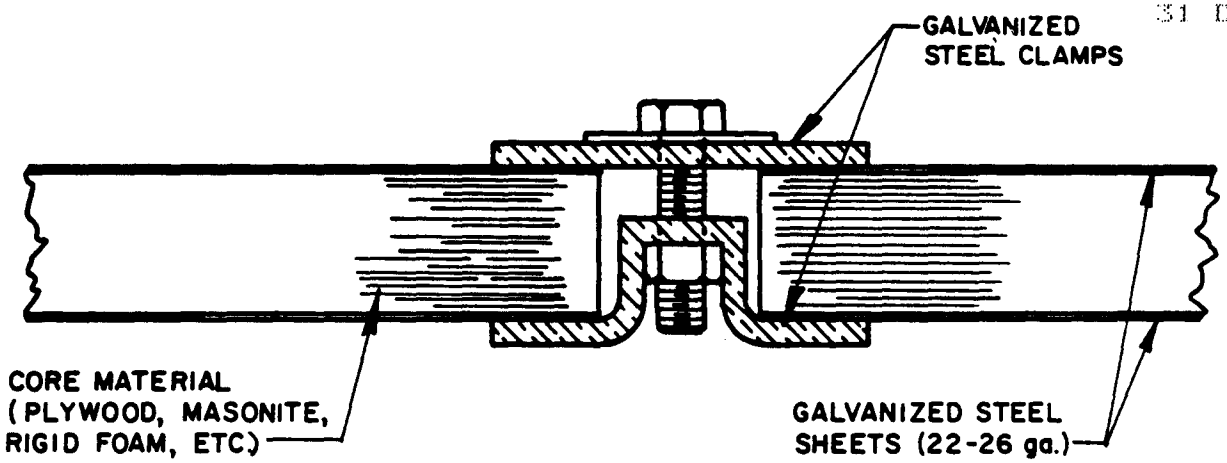

(a)

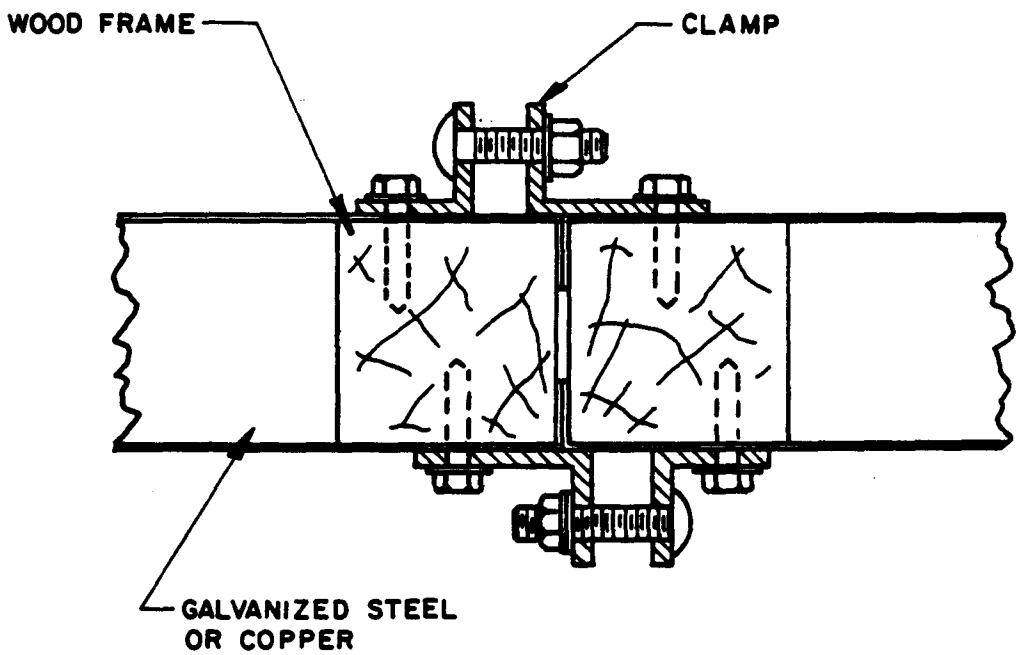

(b)

Figure 12-2. Typical clamped modular shield room joints.

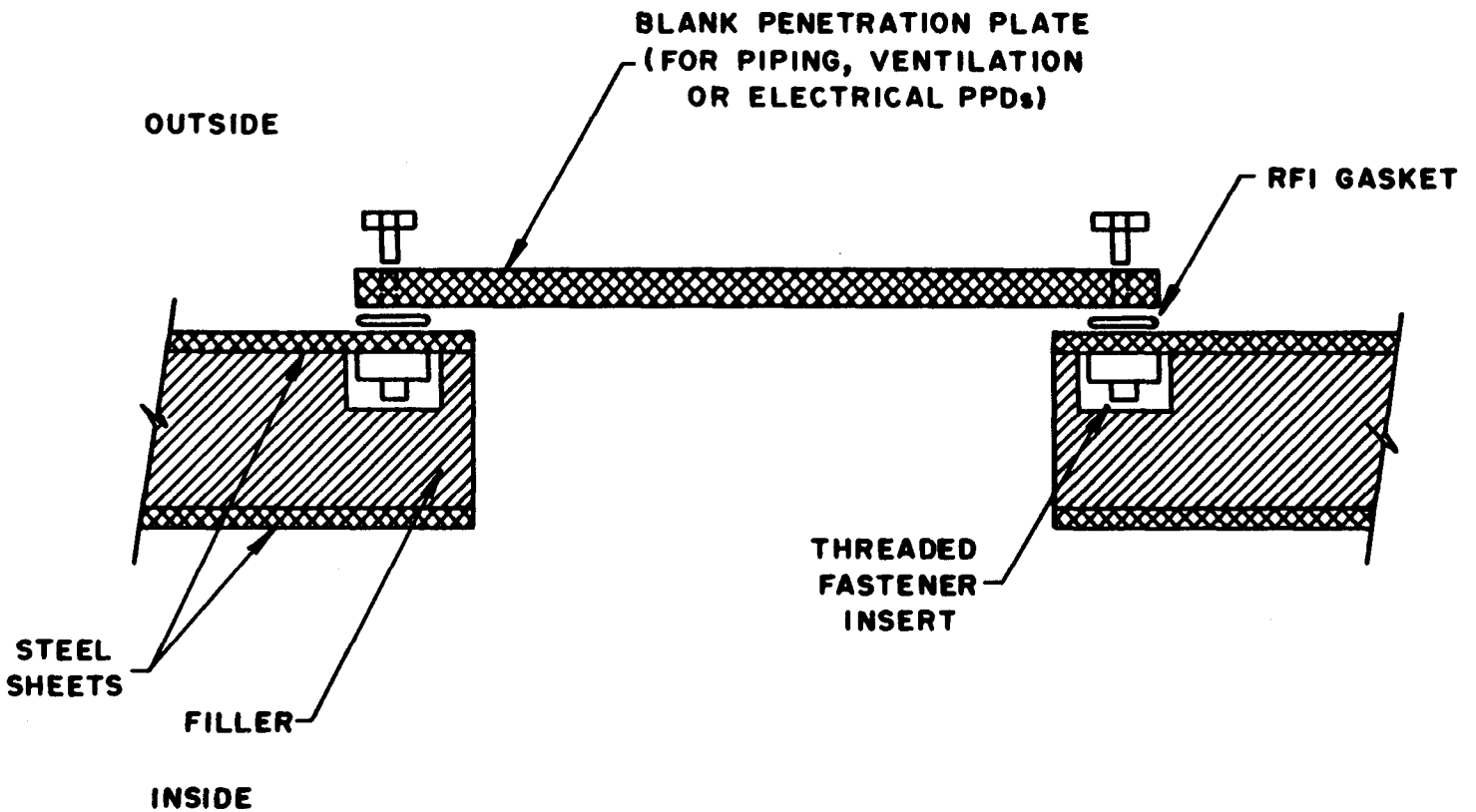

Figure 12-3. Typical penetration panel installation in a modular shielded enclosure.

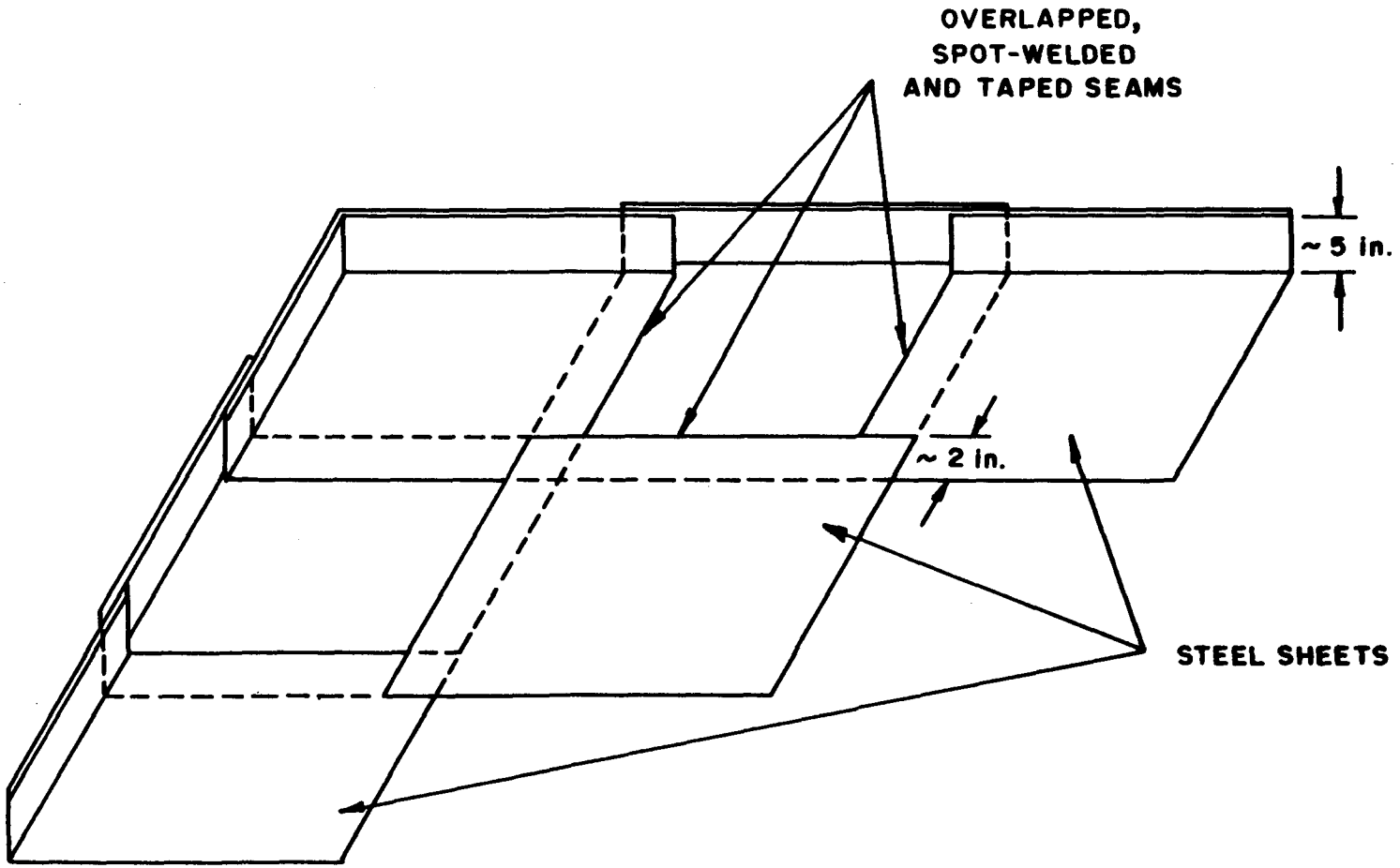

Figure 12-4. Steel plate floor shield design.

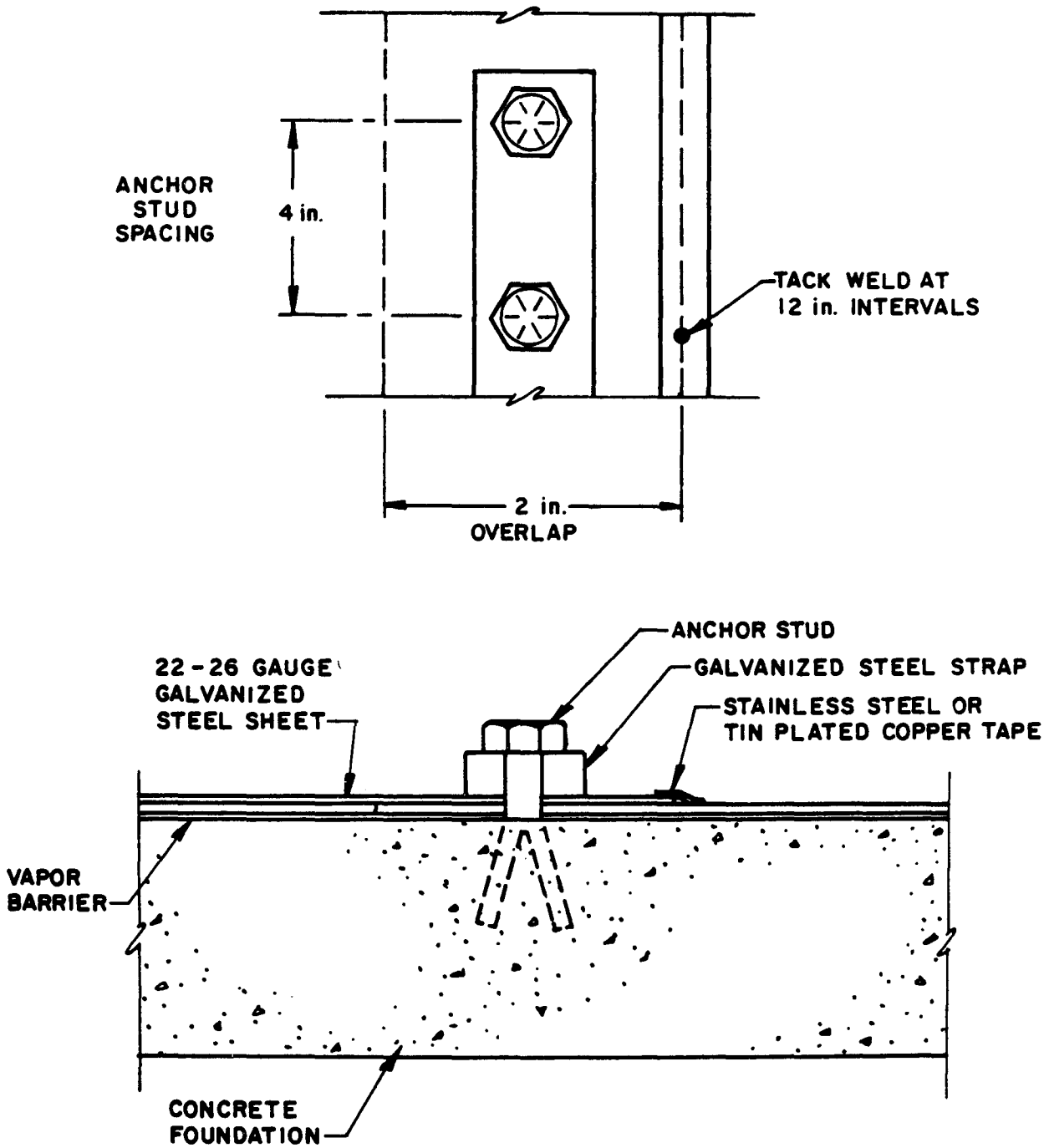

Figure 12-5. Floor plate shield construction technique.

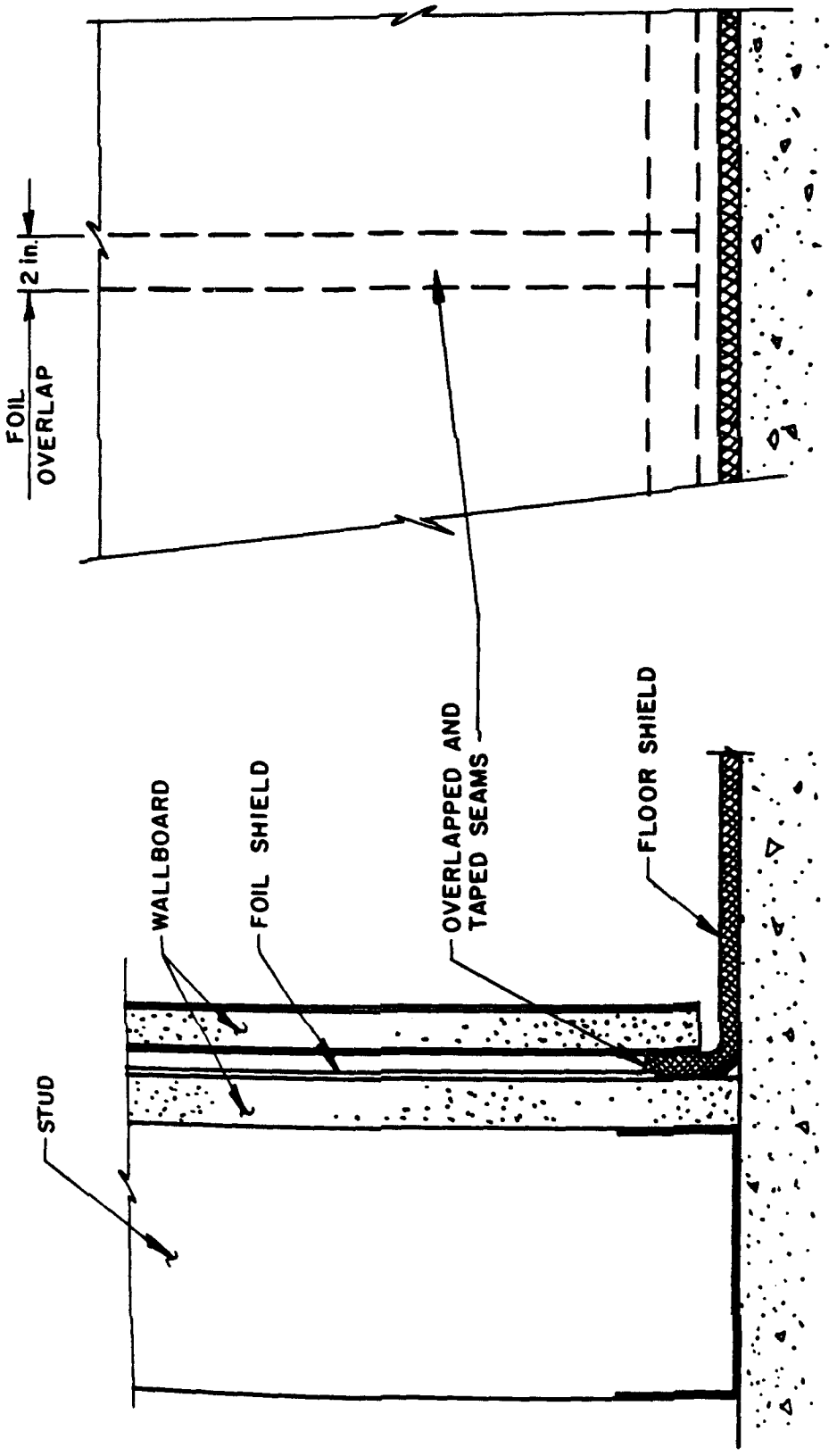

Figure 12-6. Foil wall shield construction technique.

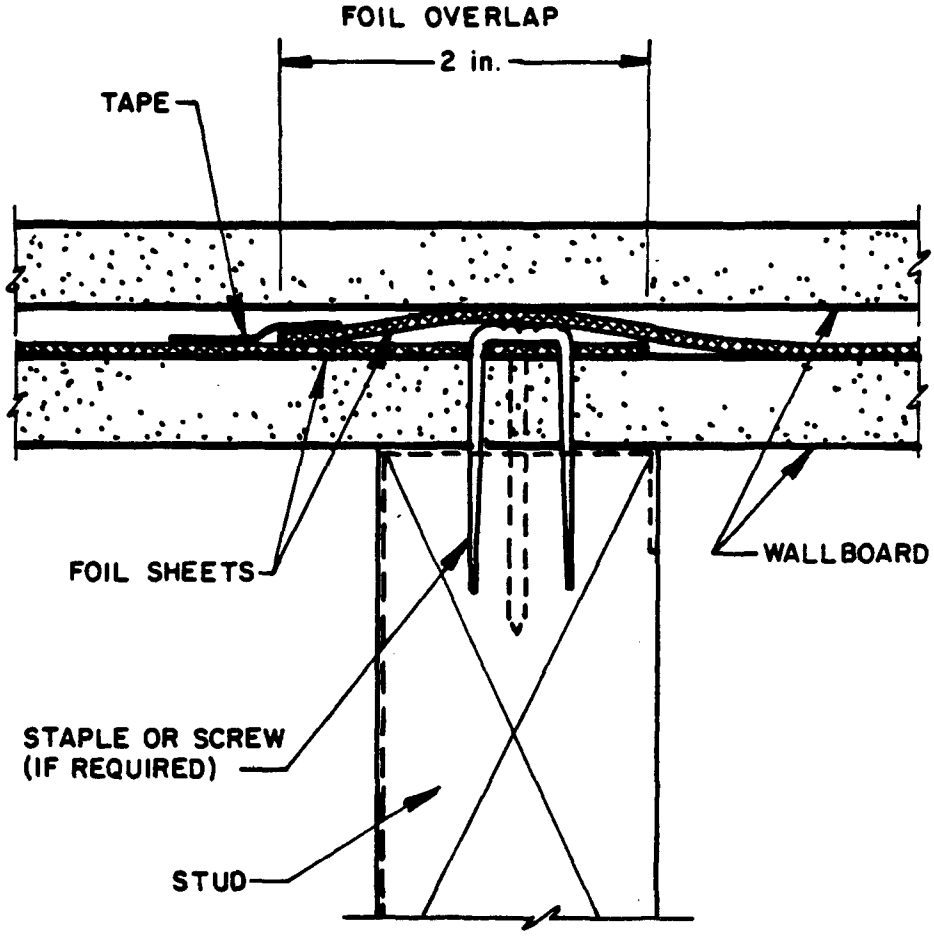

Figure 12-7. Foil/foil seam.

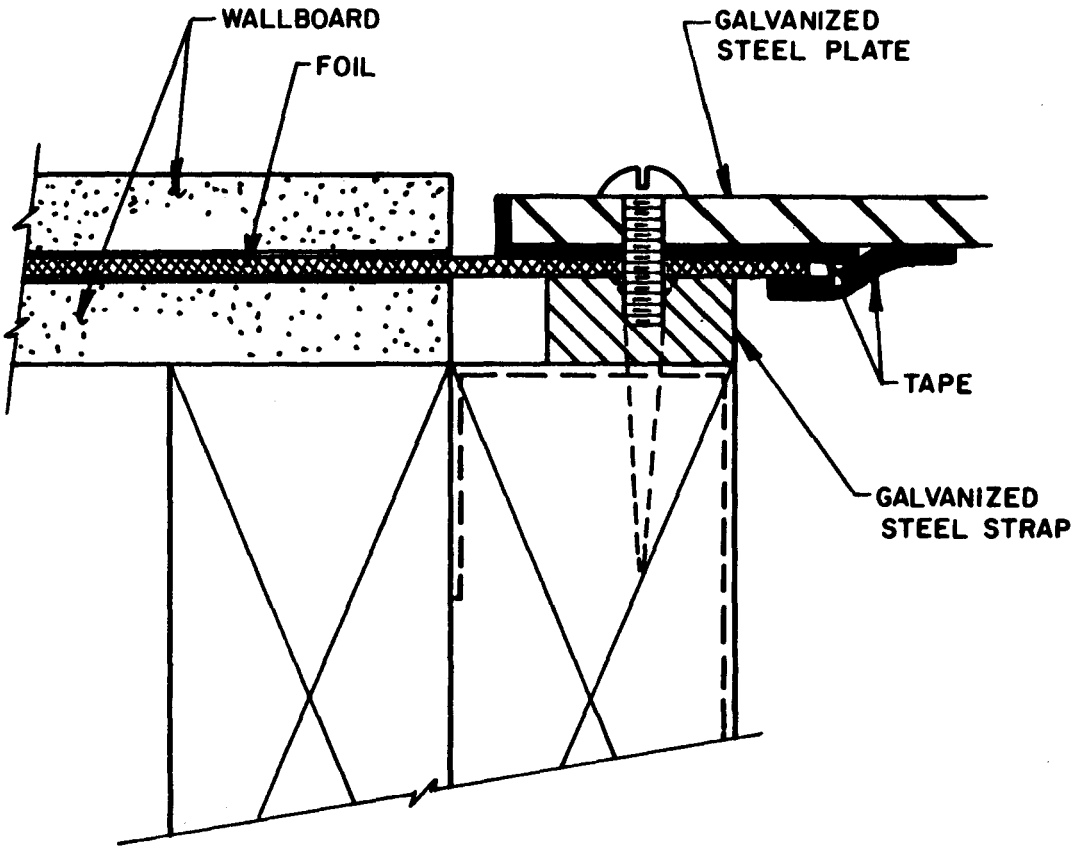

Figure 12-8. Sheet metal/foil seam.

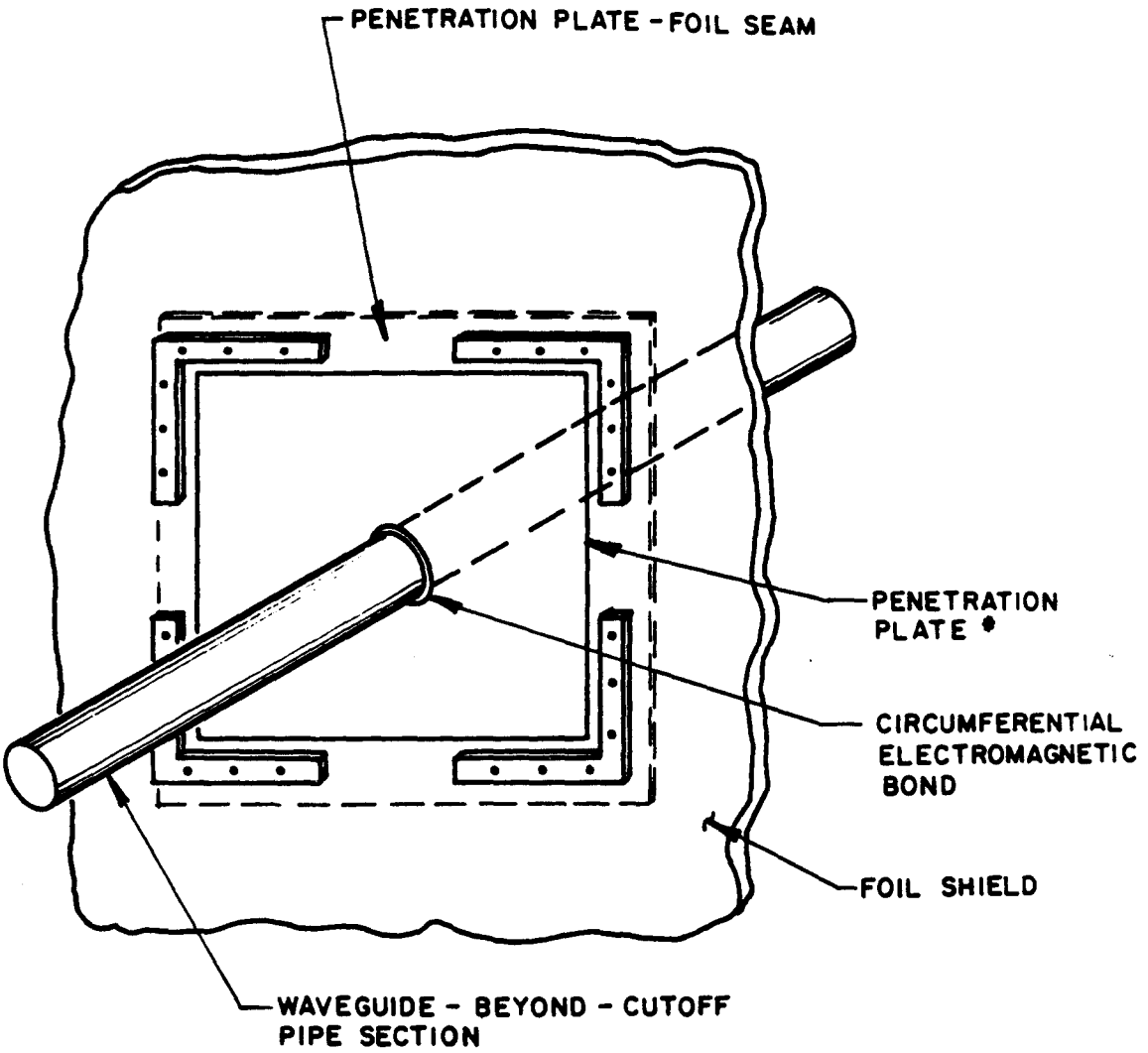

*PROVIDE SUPPORT FOR PENETRATION PLATE AND PIPING FOR MECHANICAL PROTECTION OF THE SHIELD.

Figure 12-9. Foil shield pipe penetration design.