CHAPTER 5

FACILITY DESIGN

5-1. Outline. This chapter is organized as follows:

5-1. Outline
5-2. Theoretical approach to shielding
- *a. Shielding theory*
- *b. Shielding effectiveness*

5-3. Shield design methodology
- *a. Shield performance requirements*
  - *(1) Overall system*
  - *(2) Disruptive signals*
  - *(3) System protection concept*
  - *(4) Total isolation to be provided*
- *b. Shield material and thickness*
  - *(1) Source to shield distance*
  - *(2) Size of protected object*
- *c. Shield considerations*
  - *(1) Defective seams*
  - *(2) Air apertures*
  - *(3) Seam impedance*
  - *(4) Penetrations*
- *d. Design approach*
  - *(1) Shielding effectiveness required*
  - *(2) Material and thickness*
  - *(3) Safety margin*
  - *(4) Apertures required*
  - *(5) Aperture control*
  - *(6) Doors*
  - *(7) Seam bonding*
  - *(8) Terminal protective devices*

5-4. Solid shields
- *a. Plane wave theory*
  - *(1) Absorption loss and frequency*
  - *(2) Reflection loss and impedance*
  - *(3) Plane wave shielding*
  - *(4) Re-reflection*
  - *(5) Relationships*
- *b. Absorption loss*
  - *(1) For electromagnetic wave*
  - *(2) Proportions*
  - *(3) Calculating loss*
  - *(4) Example*
- *c. Reflection loss*
  - *(1) Approximating loss*
  - *(2) Limitation of approximation*
  - *(3) Comparison to absorption loss*

(4) Plane wave loss
(5) High-impedance fields loss
d. Re-reflection correction term
(1) Cause of re-reflection
(2) Graphs of relationships
(3) Using graphs for absorption loss
(4) Using manufacturers' data
(5) Using graphs for reflection loss
(6) Example
e. Shielding effectiveness data
(1) Using absorption loss table
(2) Variation of absorption loss
(3) Magnetic field reflection
(4) Combined absorption and reflection
(5) Re-reflection factors
(6) Effect of shield thickness
(7) Example
5-5. Shielded enclosures
a. Enclosure shielding effectiveness
(1) Low-carbon steel walls
(2) Layered sheet-steel walls
(3) Mean shielding effectiveness
b. Enclosure response to HEMP
(1) Spherical enclosure and magnetic field
(2) Spherical enclosure and peak voltage
(3) Practical enclosures
5-6. Mesh and perforated shields
a. Screens and perforated metal shields
(1) Shielding effectiveness parameters
(2) Single layer wire cloth and screening
(3) Using tables
(4) Shield dimensions
(5) Galvanized hardware cloth
b. Honeycomb
(1) Attenuation
(2) Rectangular and circular waveguides
(3) Maintaining airflow through honeycomb
5-7. Layered shields
5-8. Reinforcement steel (rebar)
a. Concepts
(1) Electrical assumptions
(2) Reinforcement dimensions
(3) Magnetic attenuation
(4) Double-course reinforcement
(5) Degradation of shielding effectiveness
(6) Sample calculations
b. Single-course reinforcing steel construction
c. Double-course reinforcing steel construction
(1) Effect of bar size and spacing

(2) Welding intersections and splices
(3) Welding at corners
(4) Welded wire fabric
(5) Attenuation from welded wire fabric
5-9. Earth cover electromagnetic wave attenuation
a. Absorption loss
b. Reflection loss from soils
5-10. Shield joints and seams
a. Shield fabrication
b. Seam bonding
(1) Metal thickness
(2) Mating surfaces
(3) Soldering
c. Mechanical joining (shielding reqts below 60 dB)
(1) Mechanical seams
(2) Seams with gaskets
(3) Gasket selection-- summary
5-11. Internal cable and connectors
a. Shielding effectiveness
(1) Analysis methods
(2) Transfer impedance
(3) Cable length
(4) Cable shielding methods
b. Braided cable
c. Tape-wound shield
d. Twisted-pair cable
(1) Using twisted pairs
(2) Shield termination
e. Cable connectors
(1) Transfer impedance
(2) Common connectors
(3) Connector materials and finishes
(4) Threaded connectors
(5) Bayonet connectors
(6) Using gaskets
5-12. Conduit and conduit connections
a. Solid conduit
(1) Coupling mechanism
(2) Connectors
(3) Flaw impedance
(4) Coupler threads
(5) Leakage at threads
(6) Diffusion current
b. Flexible conduit
(1) When required
(2) Metal bellows
c. Conduit unions
(1) Sources of leakage
(2) Pulse excitation tests

(3) Descriptions of unions
(4) Conclusions about unions
d. Conduit fittings and junction boxes
(1) Sources of leakage
(2) RF interference gaskets
(3) Effect of no cover
(4) Summary
5-13. Terminal protection for electrical penetrations
a. Transient suppressors
(1) Spark gaps
(2) Metal oxide varistors
(3) Silicon avalanche suppressors
(4) Semiconductor diodes
(5) Features of transient suppressors
(6) Installation criteria
(7) Comparison of terminal protection devices
b. Filters
(1) Classes
(2) Reactive versus lossy filters
(3) Filter uses
(4) Filter installation and mounting
(5) Specifying filters
c. Common mode rejection (CMR)
(1) Balanced cables
(2) Improving CMR
(3) Examples of balanced cable designs
d. Isolation
(1) Fiber optic cables
(2) Waveguides for fiber cables
(3) Electro-optic isolators
(4) Microwave isolation technique
5-14. Apertures
a. Shielding
(1) Doors/personnel entry
(2) Other access ports
(3) Air ducts
b. Waveguide-below-cutoff (WBC)
(1) Tunnels
(2) Tunnels and grills
5-15. Utility penetrations
a. Overview
b. Conductive penetrations
c. Nonconductive penetrations
(1) Pipes carrying fluids
(2) Impacts of fluids on waveguides
5-16. Bonding
a. Purpose
(1) Potential differences
(2) External fields

(3) Equipotential surfaces
b. Techniques
(1) Direct bonding
(2) Indirect bonding
c. Bond protection
(1) Source of corrosion
(2) Galvanic series
(3) Electrolysis
(4) Effect of moisture
(5) Summary
5-17. Grounding
a. Concepts
(1) Lightning protection
(2) Grounding buildings
(3) Interfacing electronic equipment
(4) Grounding system as electrical circuit
b. Techniques
(1) Zonal boundaries
(2) Soil as a dissipative medium
(3) Alternate grounding means
(4) Ring ground
(5) Configuration of collectors
(6) Single-point grounding
5-18. Cited references
5-19. Uncited references

5-2. Theoretical approach to shielding.

a. Shielding theory. The shielding theory that best applies to engineering calculations is based on an analogy to transmission line theory (ref 5-1). The transmission through an electromagnetic shield where the EM wave fronts coincide with the shielding boundary configuration is mathematically modeled in a way analogous to that in which a two-wire transmission line transmits electric current and voltage. Consider an incident EM wave with a power P in watts per square meter striking a flat shield as in figure 5-1. When the wave meets the first surface of the shield, part (P_{r1}) of the incident power (P_{in}) reflects back toward the source. The rest (P_{t1}) penetrates the shield and starts to propagate through it. The ratio of reflected power to incident power (P_{r1}/P_{in}) depends on the shield material's intrinsic impedance and the wave impedance (ratio of electric field strength to magnetic field strength) of the incident wave in the same way as at the junction of two transmission lines with different characteristic impedances. Part of the power transmitted into the shield (P_{t1}) is changed into heat as the wave moves through the shield. This energy loss is called "absorption loss" and is analogous to the dissipated energy inside a lossy transmission line. Of the power propagating through the shield toward the second surface, part is reflected back into the shield and the rest (P_{out}) is transmitted through the surface and beyond the shield. If the absorption loss in the shield is small (less than 10 decibels), a significant part of the

power reflected at the second surface (P_{r2}) propagates back to the first surface, where some of it is re-reflected back into the shield. At each surface, part of the energy is reflected and part is transmitted, contributing to an increase in the total energy propagated through the shield.

b. Shielding effectiveness. A shield's effectiveness is given in terms of how much it can reduce the incident EM field strength. Shielding effectiveness (SE) is therefore defined as the ratio of the field strength without the shield to the field strength with the shield. Because of the wide ranges in this ratio, SE is commonly expressed (in decibels) as--

$$\begin{aligned} SE &= 20 \log (E_1/E_2) = 20 \log (H_1/H_2) \\ &= 10 \log (P_1/P_2) \end{aligned} \qquad \text{(eq 5-1)}$$

where E_1 is the electric field strength, H_1 is the magnetic field strength, and P_1 is the power density of the incident wave. E_2, H_2, and P_2 are corresponding values with the shield in place. The SE of a given material is a complex function with many parameters. The most notable of these are the frequency and impedance of the impinging wave and the intrinsic characteristics of the shield material. In practice, the SE of enclosures is of primary concern. Thus, the above expressions are generally used to calculate the effectiveness (in decibels) of the shield material as well as the effectiveness of shield penetration and aperture treatments.

5-3. Shield design methodology. In general, 100-decibel shields require welded steel panels, whereas 50- to 60-decibel shields can be constructed using bolt-together panels. Lower shielding levels, as may be suitable for TEMPEST, can be provided with thin metals or foils. After establishing the required shielding level, the designer must consider the shield material thickness, material properties (permeability and conductivity), apertures, penetrations, geometry, construction--including solid sheet materials or screens and seam-joining techniques (e.g., bolted or welded), and the performance requirements (shielding effectiveness versus frequency). This paragraph addresses the approach to designing a shield in qualitative terms. The rest of this chapter (paragraphs 5-4 through 5-17) presents the quantitative data and formulas for shield design.

a. Shield performance requirements. The first step in designing an enclosure shield, whether for a large facility or an equipment enclosure, is to define the SE required. An enclosure's SE is not constant with frequency and this fact is usually taken into account in the SE definition. The shield design, shield material and thickness, and aperture penetration control affect the SE frequency dependence.

(1) Overall system. To establish the shield performance requirements, the overall system (facility and associated electronic and electrical systems) must be considered. The damage and/or upset levels at the terminals of equipment housed in the facility should be known. These values can be

obtained analytically, through laboratory experiments, or in some cases, from existing data bases for the same or similar equipment.

(2) Disruptive signals. Second, the way in which disruptive voltages and currents are coupled to the sensitive equipment's terminals should be determined. For example, they may be induced by penetrating magnetic or electric fields or by currents being conducted on cables that penetrate the facility (or possibly by cable-to-cable coupling of the cables that penetrate the facility). If the disruptive signals are coupled due to fields, protection is achieved by shielding the interior cables, shielding the entire facility, providing protection at the equipment terminals, or a combination of these techniques. If the signals are the result of energy injected by a shield-penetrating conductor, then these penetrants can be controlled at the point of entry to the enclosure or at the equipment terminals.

(3) System protection concept. The overall sensitive systems' protection design concept also plays a major role. That is, the choice of shielding concept (a low-performance facility shield in combination with interior cable and equipment shields--a multi-EM barrier approach--or a single barrier, high-performance facility shield) determines how the shield should be designed. (Chapter 3 discusses shielding concepts.) In general, this decision is influenced by economics, future expansion plans, the need for flexibility in system configuration changes, and maintenance capability.

(4) Total isolation to be provided. To establish the shield performance requirements, it is necessary to know the total isolation (protection level) that must be provided. For example, low-frequency magnetic field (low impedance fields) shielding is much harder to obtain than are high-frequency plane wave and electric field (high impedance fields) shielding. However, to obtain the same overall interior system isolation, a lower SE may be required from the shield for low-frequency magnetic fields due to the way in which magnetic fields couple to cables and circuits. For magnetic field coupling, a time-varying magnetic field is required (or motion of a conductor in a stationary magnetic field which is generally not of concern). Faraday's Law states that the voltage induced in a conducting loop is directly proportional to the time rate of change of the magnetic field and the area ofthe loop (i.e., $V_{induced} = B\ A$, where B represents the time derivative of the magnetic field and A is the cross sectional area of the conducting loop normal to the magnetic. field). This relationship implies that if B is small (low frequency or slow rise and fall times for a transient) or A is small, the voltage induced is small. Thus, less shielding is required for the same loop-induced voltage if the frequency is low.

b. Shield material and thickness. An enclosure's SE results from losses due to both reflection and absorption. The most common theory for calculating SE is the plane wave (or transmission line) theory presented in paragraph 5-4 below. Application of this theory requires that certain conditions be met as described in paragraphs (1) and (2) below.

(1) Source to shield distance. The source-to-shield distance must be greater than wavelength/2(pi) to be considered a plane wave. At this distance, the wave front is still spherical but can be assumed to be planar with minimal error for the analysis. At distances less than this, near-field calculations must be used. For the HEMP spectrum, the lowest frequency of interest is 10 kilohertz which corresponds to a wavelength of 30 kilometers. Plane wave criteria require a source-to-object distance of approximately 5 kilometers, which is met for HEMP with HOB $\geq$ 30 kilometers. In the near-field, the electric and magnetic fields must be analyzed separately.

(2) Size of protected object. The object size must be greater than 2 to 3 wavelengths in the smallest dimension or the infinite plane shielding theory no longer directly applies. If reflection loss is neglected, the infinite plane shielding theory can be extended to objects as small as 0.1 wavelength. Neglecting reflection losses provides a conservative estimate. As can be seen from the maximum wavelength associated with HEMP, the case of an object size greater than 2 to 3 wavelengths is not met for any enclosure.

(a) Another situation in which reflection losses are ignored is when the enclosure currents are induced primarily by conducted currents collected by external cables, pipes, etc., where the cable shields and pipes are terminated on the enclosure. The field reflection losses do not enter into the calculation in this case. There is some reflection loss at the entry point, but for a worst-case analysis, this loss can be ignored. These conducted enclosure currents are obtained by analyzing the coupling of the complete system or from laboratory scale model tests.

(b) Both the reflection loss and absorption loss depend on the shield's material properties. The absorption losses increase as the square root of frequency and material properties, and directly with material thickness. Reflection losses at all frequencies for electric and plane wave fields, however, remain quite high (more than 60 decibels for iron and more than 68 decibels for copper at 10 gigahertz (see para 5-4e below). The reflection losses for magnetic fields are low (less than 50 decibels) at frequencies below 100 kilohertz for copper and aluminum and appoximately 100 megahertz for iron. The result is that any relatively good conductor (i.e., copper, aluminum, iron) will provide good SE at all frequencies for electric and plane waves. The design problem with regard to material properties and thickness, therefore, is related to obtaining the required SE for magnetic fields at frequencies below approximately 100 kilohertz.

(c) To obtain good SE for magnetic fields at low frequencies due to the enclosure size restrictions cited above, it is necessary to increase the absorption losses. This condition can be achieved by increasing either the permeability or the conductivity. Copper is one of the best conductors, but still falls short of adequate absorption loss unless excessive thicknesses are used. Therefore, the remaining option is to increase the permeability. The permeability of all materials decreases with frequency, so care must be taken in the choice of material. The conductivity of high-permeability materials is

less than that of copper which reduces high-frequency SE; however, the high-frequency SE of high-permeability materials is usually adequate. The design choice is therefore to select a material and thickness for which low-frequency magnetic field absorption loss combined with the reflection loss, if possible, provide the required SE at the lowest frequency of interest (10 kilohertz for HEMP).

c. Shield considerations. The construction techniques and penetrations generally determine a shield's high-frequency performance. When openings in a shield become greater than approximately wavelength/6, significant fields can penetrate to the interior. For example, suppose a shield is composed of the reinforcement bars in concrete; even if the bars are intersection-welded, a spacing between bars of greater than wavelength/6 results in low SE. For the commonly used double exponential HEMP, the highest frequency of interest is 200 megahertz (see chap 2) and this spacing requirement is less than 0.15 meter. Bar spacing is more critical for EMI which has frequencies in the 11 to 40 gigahertz range, and relates to fields present in the entire interior volume of the enclosure. Higher fields will be present near the aperture for aperture dimensions that are small compared with a wavelength so that the penetrating fields are nonpropagating. These fields decrease in magnitude as the inverse cube of the distance from the aperture.

(1) Defective seams. Apertures resulting from seams with defects also can introduce field-coupling inside the enclosure. If these defects have openings that are nonpropagating (i.e., much smaller than the wavelength), the fields again decrease in magnitude as the inverse cube of distance from the aperture. For high shield currents and susceptible equipment located near the shield, these fields could cause potential disruption. This upset can occur even for low-frequency shield currents due to the redistribution of currents on the shield caused by the seam apertures.

(2) Apertures. Apertures for air inlets, exhausts, and similar features also must be sized and treated to maintain high-frequency SE. These openings are designed as waveguide-below-cutoff structures.

(3) Seam impedance. Seam impedance is of concern since induced currents flowing across seams can introduce potential drops over the seams, which will result in reradiation inside the shielded volume. These potential drops can also cause problems when the shield is used in the grounding system.

(4) Penetrations. Configuration control must be considered during the design phase. Conducting penetrations must be bonded carefully around the penetrant periphery (360 degrees) to the shield entry plate to prevent aperture coupling to the facility interior or to inner conductors of shielded cables. Nonconducting penetrations must be treated as apertures in the shield and given WBC treatment.

d. Design approach. In designing a facility shield, the following steps should be performed in the order listed.

(1) Shielding effectiveness required. Determine the exterior shield performance (SE) as a function of frequency and interior equipment susceptibility. Repeat this process for the interior shield (second barrier) if one will be used.

(2) Material thickness. Select the material and material thickness to obtain the necessary SE at the lowest frequency of concern and for the field impedance of interest for all shield barriers, internal and external. For small (less than 2 to 3 wavelengths) enclosures or conducted enclosure currents, the reflection loss can be ignored.

(3) Safety margin. Provide a safety margin in the SE to account for corner effects in low-performance shields (less than 60 decibels).

(4) Apertures required. Determine which apertures must be open and apply the necessary protective design techniques to achieve the same level of attenuation as that of the shielded enclosures.

(5) Aperture control. Design seams and treatment to control aperture size such that attenuation through apertures is the same or higher than that for enclosure SE.

(6) Doors. Select or design doors to achieve the same decibel attenuation as that of the enclosure. Maintenance of gaskets, spring fingers, and contact surfaces also should be considered.

(7) Seam bonding. Seam bonding must be low-impedance type.

(8) Terminal protective devices. Provide for penetrant bonding, entry plate, and entry vault to house terminal protective devices if required.

5-4. Solid shields.

a. Plane wave theory. The plane wave (or transmission line) theory is the basis for the most commonly used approach to shielding design. For a plane wave normally incident on a large plane sheet of metal, the SE is (ref 5-2)--

$$SE = A + R + B \qquad \text{(eq 5-2)}$$

where A = absorption loss of the material (decibels), R = single reflection loss (decibels), and B = re-reflection correction term (decibels).

(1) Absorption loss and frequency. For a given material, absorption loss (in decibels) at a specific frequency is a linear function of the material thickness. Characteristics of the material that influence this loss are conductivity and permeability. Absorption loss is largely independent of

wave impedance and is the same for electric, magnetic, and plane wave fields. Magnetic field shielding at low frequencies mainly depends on absorption losses since reflection losses decrease with frequency. In addition, the shield must approximate an infinite sheet. For practical cases, the smallest shield enclosure dimension must be greater than 2 to 3 wavelengths to achieve significant reflective loss. Electric fields, however, are readily stopped by metal shields because large reflection losses are easy to obtain for any good conductor.

(2) Reflection loss and impedance. The single reflection loss term depends on the degree of mismatch between the impedance of the field and that of the shield. The impedance of the impinging wave is given by the ratio of its electric to magnetic field strength in space in the vicinity of the shield. A shield's impedance is a complex function of its electrical properties, thickness, and impinging wave frequency. In general, the shield impedance is low for highly conducting shields and increases for shields with high permeability.

(3) Plane wave shielding. For the reflected wave to be as large as possible or for the reflection loss to be high, the shielding material should have an impedance much lower than the wave impedance. To shield against plane waves, any good conductor is suitable (e.g., copper, aluminum, and steel).

(4) Re-reflection. The re-reflection correction term is a complex function of material, dimensions, and frequency. The term can be ignored if the absorption loss exceeds 10 decibels. If the absorption loss is less than 10 decibels, however, the correction term should be determined.

(5) Relationships. The absorption loss, single reflection loss, and re-reflection correction terms can be approximated by relationships involving shield thickness (t), material conductivity (g), material permeability (u), and frequency (f). Since reflection loss depends on the incident wave's impedance, relationships are given for low-impedance fields (Z less than 377 ohms; magnetic fields), high-impedance fields (Z greater than 377 ohms; electric fields), and plane wave fields (Z = 377 ohms).

b. Absorption loss.

(1) For electromagnetive wave. The absorption loss for an EM wave passing through a shield of thickness t can be shown by--

$$A = K_1 t \quad f u_r g_r \quad \text{(decibels)} \qquad \text{(eq 5-3)}$$

where K_1 = 131.4 if t is expressed in meters, K_1 = 3.34 if t is expressed in inches, t = shield thickness, f = wave frequency (hertz), u_r = permeability of shield material relative to copper, and g_r = conductivity of shield material relative to copper.

(2) Proportions. The absorption loss (in decibels) is proportional to the thickness of the shield and increases with the square root of incident EM wave frequency. The absorption loss also increases with the square root of the product of the permeability and conductivity (both relative to copper) of the shield material. As noted before, absorption loss is independent of wave impedance.

(3) Calculating loss. A simple approach to calculating the required absorption loss is to--

(a) Estimate the reflection loss (if applicable, depending on the enclosure size and conducted current on the enclosure) for the type of field.

(b) Subtract the reflection loss from the SE requirement.

(c) The difference from (b) above must be obtained from the absorption loss as in (d) below. If the required absorption loss is less than 10 decibels, then the correction factor must be applied to the reflection loss in (a) above and steps (b) through (e) repeated.

(d) Calculate the absorption loss per mil thickness from equation 5-3 for the material chosen.

(e) Calculate the material thickness required by dividing the required loss by the loss per mil. If this thickness is excessive because of weight, cost, or other factors, select a new material and repeat the calculation.

(4) Example. As an example, assume the following shielding system design:

(a) Facility size = 100 by 100 by 20 meters.

(b) System sensitivity (V_{upset}) = 2 volts at equipment terminals.

(c) Maximum loop size between equipment = 2 meters squared.

(d) Incident field = HEMP; H_e = 133 amps per meter, E_e = 50 kilovolts per meter.

(e) Based on the previous discussion, since the facility size is much less than the wavelength, assume no reflection losses.

(f) Estimate $\dot{H}i_{max}$ (internal time rate of change of magnetic field). The interior loop coupling is given by Faraday's Law of Induction as (eq 5-4):

$$V = u\dot{H}_{i_{max}} A \qquad \text{(eq 5-4)}$$

where $u = u_o = 4(pi) \times 10^{-7}$ (free space or air); A = loop area; and V = maximum allowable voltage transient at equipment terminals. Thus--

$$2 = V = [4(pi) \times 10^{-7}]\ \dot{H}_{i_{max}} \quad (2)$$

$$\dot{H}_{i_{max}} = \frac{V}{uA} = 4u^2 \times 10^7 \quad (2)$$

$$= 8 \times 10^5 \text{ amps/meter/second}$$

(g) Estimate $\dot{H}_{i_{max}}$:

$\dot{H}_e$ = 133 amps/meter (free field)

t_r = pulse rise time = 10 nanoseconds

$\dot{H}_{e_{surface}} = 2\dot{H}_e$ = J, the field or current density at the conducting surface.

J = 266 amps/meter

$$\dot{J} \simeq J/t_r = \frac{266}{10^8} = 2.66 \times 10^{10} \text{ amps/meter/second and--}$$

$$\dot{H}_{i_{max}} = \frac{\dot{J}}{2} = 1.33 \times 10^{10} \text{ amps/meter/second}$$

(h) Estimate the required SE:

$$SE = 20 \log \left(\frac{\dot{H}_{i_{max}}}{\dot{H}_{e_{surface}}} \right) = 20 \log \left(\frac{8 \times 10^5}{2.66 \times 10^{10}} \right)$$

$$= 90 \text{ decibels}$$

(i) For worst-case analysis, assume that all attenuation must be achieved through absorption and assume a lowest frequency of 10 kilohertz for HEMP.

(j) Calculate the absorption loss and material thickness:

$$A = 90 \text{ decibels (from (h) above)}$$

$$A = 3.34\ t\ (u_r g_r f)^{0.5}$$

$$f = 10^4 \text{ hertz.}$$

For steel (sheet metal)--

$$u_r = 1000$$

$$g_r = 0\ .17$$

Solving for t (thickness) yields--

$$t = \frac{A}{3.34\ (u_r g_r f)^{0.5}}$$

Substituting--

$$t = \frac{90}{3.34\ \ (1000 \times 0.17 \times 10^4)^{0.5}}$$

$$t = 20 \text{ mils.}$$

For copper--

$$u = 1,\ g_r = 1$$

$$t = 90/[3.34\ (10^4)^{0.5}]$$

$$t = 269 \text{ mils.}$$

(k) The calculation in (j) above is for a worst case since it assumes all the energy is at 10 kilohertz and no reflection losses occur. To solve the problem more rigorously, it would be necessary to obtain Hi_{max} derivative on a frequency-by-frequency basis, compare it with the spectrum $Hi_{surface}$ derivative on a point-by-point basis, and obtain the SE as a function of frequency. Since the steel result does not incur any great penalty (in fact, an even heavier material could be used since it would result in lower construction costs) it is generally not necessary to do a rigorous analysis for the envelope shield of a facility. If weight were a critical

factor, the longer calculation may be justified. Further, this worst-case analysis should provide a safety margin without added SE requirements for corner effects. Although this example is greatly simplified, it represents the basic method for choosing a material and thickness.

c. Reflection loss.

(1) Approximating loss. For magnetic (low-impedance) EM fields, the low impedance reflection loss can be approximated as (eq 5-5):

$$R_m \simeq 20 \log \left[\frac{C_1}{r\ (fg_r/u_r)^{0.5}} + C_2 r\ fg_r/u_r + 0.354 \right] \qquad \text{(eq 5-5)}$$

where r = distance from the EM source to the shield and f, u_r, and g_r are as stated for equation 5-3. The constants C_1 and C_2 depend on the choice of units for the distance, r, as given in table 5-1.

(2) Limitation of approximation. For HEMP, the source region is remote enough that the waves are essentially plane waves and equation 5-5 does not apply. Equation 5-5 is for source-to-object distances (r) much less than wavelength/2(pi). The product fr $\ll 2 \times 10^9$, where r is in inches, also must be met. The source distance (r) must be less than 5000 meters at a frequency of 10 kilohertz, which is the lowest frequency of concern for HEMP. For example, the magnetic field reflection loss at r = 100 meters and f = 10 KHz is--

$$R_m = 20 \log \left[\frac{0.0117}{100\ (f)^{0.5}} + 5.35\ (100)\ f + 0.354 \right]$$

$$= 20 \log [1.2 \times 10^{-6} + 53500 + 0.354]$$

$$= 95 \text{ decibels.}$$

(3) Comparison to absorption loss. As with absorption loss, the reflection loss for low-impedance fields depends on the electrical properties (u_r, g_r) of the shield material and the EM wave frequency. In contrast, reflection loss depends on the distance from the source to the shield rather than on the shield thickness, except for very thin shields (where thickness is less than skin depth).

(4) Plane wave loss. The plane wave reflection loss for a plane wave impinging on a uniform shield is given by equation 5-6:

$$R_p \simeq 168 - 20 \log \left(\frac{f u_r}{g_r} \right) \qquad \text{(eq 5-6)}$$

where g_r, u_r, and f are as defined for equation 5-3. The plane wave reflection loss declines as the wave frequency increases and is better for shielding materials with lower u_r/g_r ratios. For example, the plane wave reflection loss for copper at a frequency of 1 megahertz is--

$$R_p = 168 - 20 \log \; f$$

$$= 168 - 60$$

$$= 108 \text{ decibels.}$$

(5) High-impedance field loss. For electric (high-impedance) EM fields, the high-impedance reflection loss is approximated by equation 5-7:

$$R_E \simeq C_3 - 20 \log r \frac{u_r f^3}{g_r} \qquad \text{(eq 5-7)}$$

where C_3 = 322 if r is in meters, 354 if r is in inches; r is the source-to-object distance, and g_r, u_r, are the conductivity and permeability relative to copper. High-impedance EM wave reflection loss depends on the separation distance, r, between the EM source and the shield, as does low-impedance reflection loss. This loss declines as the frequency increases and is higher when the g_r/u_r ratio is higher. For electric fields, the conditions $r \gg$ wavelength/2(pi) and $fr \ll 2 \times 10^9$ should be met. For example, the electric field reflection loss for copper when r = 100 meters and f = 100 kilohertz is--

$$R_E = 322 - 20 \log 100 \; f^3$$

$$= 322 - 190$$

$$= 132 \text{ decibels.}$$

d. Re-reflection correction term.

(1) Cause of re-reflection. For shields in which the absorption loss (A) is fairly large, say at least 10 decibels, the energy reflected back into the shield at the second surface does not contribute significantly to the wave propagated through and beyond the shield. However, when the shield's absorption loss is low, a significant amount of energy is re-reflected and

finally propagates into the area to be shielded. Thus, for shields with low absorption loss (less than 10 decibels), SE is calculated as the sum of the absorption loss (A), the reflection loss (R), and a re-reflection correction factor (B). The correction factor in decibels is--

$$B = 20 \log [1 - X10^{-A/10} (\cos 0.23A - j\sin 0.23A)] \qquad \text{(eq 5-8)}$$

where A is the shield's absorption loss (from eq 5-3) and X is the two-boundary reflection coefficient. X depends on both the shield's characteristic impedance and the impinging EM wave's impedance; X is equal to 1 for all practical purposes except for low-frequency shielding against magnetic fields (fig 5-2) (ref 5-3).

(2) Graphs of relationships. The relationships for SE given in equations 5-3 through 5-8 have been plotted as graphs for ease of use. Figures 5-3 through 5-8 are nomographs and curves that permit graphical solutions of these relationships. The nomographs in figures 5-3 through 5-6 give solutions for absorption loss and magnetic field, electric field, and plane wave reflection loss, respectively. Figures 5-7 and 5-8 give solutions for the re-reflection loss in terms of the ratio of the shield impedance (Z_s) to the impedance of the incident magnetic field (Z_m). This ratio (K_w) is given by either figure 5-7 or equation 5-9:

$$K_w = \frac{Z_s}{Z_m} = \frac{1.3}{\left(\frac{g_r f}{u_r} \cdot r \right)^{0.5}} \qquad \text{(eq 5-9)}$$

where g_r and u_r, are the conductivity and permeability relative to copper; f is frequency; and r is source-to-object distance (ref 5-3). Once determined, the ratio K_w is used with figure 5-8 to determine the re-reflection loss, B.

(3) Using graphs for absorption loss. As an example of how to use the figures, consider a calculation for absorption loss. On the nomograph in figure 5-3, draw a straight line between a point on the right-hand vertical scale that corresponds to the metal involved and the correct point on the thickness scale (center scale on the nomograph). Mark the point at which the straight line crosses the unlabeled pivot line and the frequency of interest (left-most vertical scale). Read the absorption loss off the compressed scale just to the left of the thickness scale. This figure shows the determination of absorption loss for a 15-mil sheet of stainless steel at 1 kilohertz. First, line 1 is drawn between stainless steel on the right-hand scale and 15 mils on the thickness scale. Then line 2 is drawn between 1 kilohertz on the left-hand scale and the crossover point. The absorption loss is 3 decibels.

(4) Using manufacturers' data. If the metal of interest is not given on the right-hand scale, calculate the product of the relative conductivity

(g_r) and the relative permeability (u_r) from figures given in the manufacturer's data sheets and use this value as the right-hand point for line 1.

(5) Using graphs for reflection loss. Since the total SE is the sum of the absorption loss and reflection loss, the procedure for determining reflection loss using the nomographs in figures 5-4 through 5-6 is similar to that described for absorption loss. The right-hand scale in these three nomographs is based on the ratio of relative conductivity to relative permeability instead of the product of the two as used in the absorption loss nomograph.

(6) Example. Except for very thin shields with little absorption loss, re-reflections are unlikely to affect SE. Re-reflection loss estimates using figures 5-7 and 5-9 are necessary only if the absorption loss is less than about 10 decibels. Figure 5-7 shows an example of computing K_W for copper at a frequency of 1 kilohertz and a source-to-shield distance of 2 inches, yielding a K_W of 2.2×10^{-2}. For a 10-mil-thick sheet of copper at this frequency, the absorption loss (from fig 5-3) will be about 1 decibel. Thus, in figure 5-6, for a K_W of 2.2×10^{-2} and an absorption loss of 1 decibel, the re-reflection loss would be about 10 decibels. This example applies to low-impedance magnetic fields which are not plane waves. The re-reflection term (B) is presented (table 5-8 in para (5) below) for electric and plane wave fields for iron and copper; or, it can be calculated using equation 5-8. HEMP fields are essentially plane wave fields.

e. Shielding effectiveness data. The data in tables 5-2 through 5-4 show the SE of common metals. In addition, quick estimates for almost any frequency can be obtained using the nomographs in figures 5-6 through 5-8. The tables and figures for these data provide an easy-to-use reference of SE when they include the shield material and frequency of interest.

(1) Using absorption loss table. Table 5-2 gives electrical properties (g_r and u_r) of common shielding materials. Since u_r is frequency-dependent for magnetic materials, it is given for a typical shielding frequency of 150 kilohertz. The relative permeability decreases with increasing frequency. A typical sample of iron, for example, has a u_r of 1000 up to 150 kilohertz. At 1 megahertz, it drops to 700 and continues to fall to a value of u = 1 at 10 gigahertz. Materials with very high permeability have u_r values that drop much faster. For these high-permeability materials, $u_r = 1$ should be used above 1 megahertz in most cases. For the exact values, manufacturer's data should be consulted since these values differ with each material (e.g., Mu-metal, Permalloy, etc., which are trade names). At the higher frequencies (above 1 megahertz), a large u_r value is unimportant since the reflection losses and absorption losses are high even for nonmagnetic materials. u_r is important only for low-frequency (below 100 kilohertz) magnetic shielding. The last column gives values of absorption loss in decibels per mil since a given material's absorption loss is proportional to its thickness.

(2) Variation of absorption loss. Table 5-3 shows the variation of absorption loss with frequency for copper, aluminum, and iron. Iron has a higher absorption loss than copper at low frequencies, whereas copper has the higher loss at higher frequencies. Figure 5-9 shows curves of absorption loss as a function of frequency for certain thicknesses of copper and steel shields. For example, a 50-mil steel shield provides significant absorption losses at frequencies above 1 kilohertz.

(3) Magnetic field reflection. Table 5-4 gives reflection losses for copper, aluminum, and iron for electric, magnetic, and plane wave fields. Values in this table, derived from data in table 5-3, suggest why shielding against magnetic fields is of major concern in shield design: the magnetic field reflection loss is relatively low for all three materials. The electric field and plane wave reflection losses are high enough to provide adequate shielding for most requirements, however, especially over the EMP frequency spectrum.

(4) Combined absorption and reflection. Tables 5-5 through 5-7 show the combined absorption and reflection SE for magnetic, plane wave, and electric fields, respectively, for certain frequencies. The SE values for magnetic and electric fields were derived for a source-to-shield spacing (r) of 12 inches, which represents high- or low-impedance near fields. These data again show that electric field and plane wave shielding are relatively easy. Even for magnetic fields, shields of reasonable thickness provide significant shielding (for example, 69 decibels for copper at 150 kilohertz).

(5) Re-reflection factors. Table 5-8 shows the re-reflection (B) factors for copper and iron in electric, magnetic, and plane wave fields for various frequencies and shield thicknesses. For frequencies above 10 kilohertz and shield thicknesses greater than 10 mils, re-reflection losses are negligible for both copper and iron. If the shield is electrically thin (absorption loss less than 10 decibels), the re-reflection factor must be determined to define the total SE. Figure 5-10 shows how absorption losses for copper and iron, in decibels per mil, vary with frequency.

(6) Effect of shield thickness. Tables 5-9 through 5-11 give the total SE in electric, magnetic, and plane wave fields for copper and steel shields of certain thicknesses at a source-to-shield distance of 165 feet. Figures 5-11 through 5-13 illustrate the data in these tables. Figure 5-13 suggests that, for most EM environments, including HEMP, a 50-mil shield would greatly reduce incident energy--on the order of 100 decibels or more for frequency components above 1 kilohertz.

(7) Example. As an example of how to use the above data in estimating SE, assume that the SE of a 10-mil-thick copper sheet exposed to a plane wave field is to be determined at a frequency of 150 kilohertz. From table 5-3, the absorption loss for a 10-mil thickness at this frequency is calculated as 12.9 decibels. From table 5-4, the reflection loss is 117 decibels. Since the absorption loss is greater than 10 decibels, the re-reflection loss can be

ignored; or, by consulting table 5-8, a re-reflection loss can be estimated from the 100-kilohertz column as roughly +0.5 decibels. Thus, the total SE (SE = A + R + B) would be 12.9 + 117 + 0.5 = 130.4 decibels. Table 5-12 shows other examples of SE calculations. If the above data do not include the parameters desired, the relationships for SE can be used (eqs 5-2 through 5-8).

5-5. Shielded enclosures.

a. Enclosure shielding effectiveness. The SE relationships and data in paragraph 5-4 assume a sinusoidal wave incident on a large (many wavelengths) plane surface. For other surface geometries, such as a shielded enclosure with sharp corners and small dimensions compared to a wavelength, the surface currents induced on the shield will not be uniform. Thus, the actual shielding provided by such enclosures will likely vary somewhat from that estimated using the SE relationships of paragraph 5-4. However, these plane-surface data provide a valid basis for enclosure designs and yield realistic approximations of the SE that can be achieved in practical enclosures.

(1) Low-carbon steel walls. Figure 5-14 shows the manufacturer's specified minimum SE for an enclosure made of low-carbon-steel walls. Note from this figure that for fairly thick enclosure walls (1/4 to 3/8 inch), the minimum magnetic field SE approaches 100 decibels, even for frequencies as low as 1 kilohertz. The enclosure SE values must be derated when penetrations and apertures (especially doors) are included if they are not designed to provide an SE equal to that of the shield.

(2) Layered sheet -steel walls. Typical commercial enclosures, which are acceptable for 60-decibel shields, are built with two thin layers of steel separated by plywood or other core material. Even with the fairly thin metal thicknesses and the penetrations and apertures needed for power, doors, and ventilation, these enclosures will provide significant attenuation levels to plane waves over the range of frequencies in the HEMP spectrum. Figure 5-15 shows the manufacturer's specified performance for a typical dual-wall, bolted-panel commercial enclosure. Even for an enclosure with two thin layers of 24-gauge steel, the enclosure is predicted to provide at most 60 decibels of attenuation down to 10 kilohertz.

(3) Mean shielding effectiveness. Laboratory experiments on new enclosures have shown that the seams of bolt-together laminated steel and wood shielded enclosures may have lower SE values than claimed by the manufacturers (ref 5-4). Figure 5-16 shows a measured mean value for three room types. These data represent the mean SE from 56 test points in each room tested. The standard deviation of the test data is relatively large; for example, data for one of the rooms had a standard deviation of 17 decibels (92 decibels = mean) at 200 kilohertz magnetic field testing. It should be noted that the shielded room data in reference 5-4 were taken after initial assembly of the enclosures. No efforts were made to determine the points of greatest leakage or to increase SE at those joints. Further, after aging, the bolt-together

construction would require maintenance which would greatly affect life-cycle cost.

b. Enclosure response to HEMP.

(1) Spherical enclosure and magnetic field. The exact calculation of a practical enclosed structure's SE when exposed to a transient rather than a sinusoidal waveform is extremely complex. The magnetic SE of an enclosure has been reasonably approximated by assuming an ideal enclosure geometry--a solid spherical shell. The total SE for this geometry has been derived and plotted in a nomograph to provide a rapid way to evaluate the HEMP magnetic field SE of a spherical shell enclosure (ref 5-5). Care must be taken in using the nomograph. For example, the nomograph implies that a very thin shield can provide good shielding against HEMP. However, this does not imply that thin shields are recommended because mechanical fabrication problems make them undesirable. It simply shows that, since a thin shield would provide reasonable SE, thicker shields would afford even better SE.

(2) Spherical enclosure and peak voltage. Following a similar approach, the peak voltage induced in a loop inside a 10-meter-radius spherical shield has been calculated. Three shield wall thickness (0.2, 1, and 5 millimeters) and three different wall materials (copper, aluminum, and steel) were used in the calculations. Table 5-13 shows the results. For all materials and thicknesses, the peak HEMP-induced voltages inside the shield are very small. These values were calculated usingFaraday's Law of Magnetic Induction ($V_{induced}$ = BA, where B is the time rate of magnetic flux density and A is the loop area normal to the magnetic field).

(3) Practical enclosures. The above results were obtained for an idealized spherical enclosure that had no discontinuities in its walls. Thus, the results can be seen only as approximations of the SE of practical, rectangular enclosures. However, the results do suggest that even fairly thin, solid shields will likely reduce HEMP transients to tolerable levels in ground-based facilities. It is expected that--

(a) Facility mechanical construction requirements and cost rather than HEMP shielding requirements will dictate the final type and thickness of the shield material used.

(b) The overall effectiveness of enclosure shielding will depend on shield penetration and treatment of openings rather than shield material.

5-6. Mesh and perforated type shields. Mesh screens and perforated sheets are used both in fabricating enclosures and in electromagnetic closure of apertures where ventilating air is required. Honeycomb-type panels are a form of nonsolid shield used extensively for aperture EM closure.

a. Screens and perforated metal shields. Leakage through openings (apertures) in metal shields has been studied using transmission line theory.

Based on these studies, the SE of mesh and perforated type shielding materials has been defined as--

$$SE_a = A_a + R_a + B_a + K_1 + K_2 + K_3 \qquad \text{(eq 5-10)}$$

where A_a = penetration loss for a single aperture in decibels, R_a = aperture reflection loss in decibels, B_a = correction term (in decibels) due to successive reflections, K_1 = loss term to account for the number of openings per unit square, K_2 = penetration loss correction term for penetration of the conductor at low frequencies, and K_3 = a correction term to account for closely spaced shallow holes in the material. Normally, these correction terms may be neglected.

(1) Shielding effectiveness parameters. The terms A_a, R_a, and B_a in equation 10 relate to penetration loss, reflection loss, and the re-reflection loss correction term for a single aperture. K_1 provides for multiple apertures of the same dimensions and represents the decreased SE due to multiple apertures per unit square (the "unit square" dimension unit of measure is the same as that for the aperture, i.e., inches, meters, etc.). This term applies only when the source-to-aperture distance is large compared with the aperture dimensions. K_2 is a correction term for the penetration loss (A_a) when the conductor dimensions approach the skin depth dimension, i.e., mesh wire size or conductor width between holes approaches the skin depth for the material used at the low end of the frequency spectrum of interest (10 kilohertz for HEMP). K_3 is a correction term for the penetration loss of closely spaced shallow holes. K_3 accounts for "adjacent hole coupling" between apertures since the degradation of SE for multiple, closely spaced apertures is not the linear sum of the single aperture loss over the number of apertures.

(2) Single layer wire cloth and screening calculations. Detailed expressions for the screen and perforated metal sheet SE terms are given as follows for single-layer wire cloth or screening:

A_a = aperture attenuation in decibels

$$= 27.3\ D/W \text{ for rectangular apertures} \qquad \text{(eq 5-11)}$$

$$= 32\ D/d \text{ for circular apertures} \qquad \text{(eq 5-12)}$$

where D = depth of aperture in inches, W = dimension of a rectangular aperture in inches (measured perpendicular to the E-vector), and d = diameter of a circular aperture in inches.

R_a = single aperture reflection loss in decibels

$$= 20 \log \frac{(1 + k)^2}{4k} \qquad \text{(eq 5-13)}$$

and B_a = single aperture correction factor for aperture reflection (small when A_a is greater than 10 decibels)

$$= 20 \log \left[1 - \frac{(k - 1)^2}{(k + 1)^2} \times 10^{-0.1A_a} \right] \qquad \text{(eq 5-14)}$$

(a) In equations 5-13 and 5-14:

k = ratio of aperture characteristic impedance to incident wave impedance, or

= W/3.142r for rectangular apertures and magnetic fields (eq 5-15)

= d/3.682r for circular apertures and magnetic fields (eq 5-16)

= $jfW \times 1.7 \times 10^{-4}$ for rectangular apertures and radiated fields (eq 5-17)

= $jfd \times 1.47 \times 10^{-4}$ for circular apertures and radiated fields (eq 5-18)

where f = frequency in megahertz, r = distance from signal source to shield in inches, and $j = (-1)^{0.5}$, W = largest dimension of rectangular aperture, and d = diameter of circular aperture.

K_1 = correction factor for number of openings per unit square (applies when test antennas are far from the shield compared with distance between holes in the shield)

$$= 10 \log \frac{1}{an} \qquad \text{(eq 5-19)}$$

where a = area of each hole in square inches and n = number of holes per square inch.

K_2 = correction factor for penetration of the conductor at low frequencies

$$= -20 \log \left[\left(1 + \frac{35}{p^{2.3}} \right) 705 \right] \qquad \text{(eq 5-20)}$$

where p = ratio of the wire diameter to skin depth, d:

$$d = \frac{6.61}{f} \quad \text{in centimeters, f in hertz}$$

$$d = \frac{2.60}{f} \quad \text{in inches, f in hertz} \qquad \text{(eq 5-21)}$$

K_3 = correction factor for coupling between closely spaced shallow holes

$$= 20 \log \left[\frac{1}{\tanh (A_a/8.686)} \right] \qquad \text{(eq 5-22)}$$

Figure 5-18 presents these parameters in graphic form.

(b) As an example, determine the SE of a No. 22, 15-mil copper screen when it is subjected to a magnetic field from a loop source 1.75 inches away and operating at a frequency of 1 megahertz. Such a screen has 22 meshes per linear inch. The center-of-wire to center-of-wire distance is 1/22 (0.045) inch and the opening width is smaller by an amount equal to the wire meter, 0.015 inches. The depth of the aperture is assumed to be equal to the wire diameter. Thus--

$$A_a = (27.3)D/W = (27.3)\ (0.015)\ /\ (0.045 - 0.015)$$

$$= 13.5 \text{ decibels}$$

The impedance ratio for the magnetic wave and rectangular apertures is given by--

$$k = W/(pi)r = (0.045 - 0.015)\ /\ [1.75(pi)]$$

$$= 0.00554$$

and the reflection term is--

$$R_a = 20 \log \left[\frac{(1 + k)^2}{4k} \right] = 33.2 \text{ decibels}$$

The multi-reflection correction term is--

$$B_a = 20 \log \left[1 - \frac{(k - 1)^2}{(k + 1)^2} \times 10^{-A_a/10} \right]$$

$$= -0.4 \text{ decibels}$$

The correction factor for the number of openings is--

$$K_1 = 10 \log \left(\frac{1}{an} \right)$$

$$= 10 \log \frac{1}{(0.045 - 0.015)^2 \ (22)^2}$$

$$= 3.5 \text{ decibels}$$

The skin depth correction term is--

$$K_2 = -20 \log [1 + (35/p^{2.3})]$$

$$p = \frac{0.015}{2.6 \times 10^{-3}} = 5.77$$

$$K_2 = -20 \log [1 + 35/56.3)] = -4.2 \text{ decibels}$$

Finally, the hole-coupling correction factor is given by--

$$K = 20 \log [1/\tanh (A_a/8.686)]$$

$$= 0.8 \text{ decibels}$$

The screen's SE is the sum of the six factors--

$$SE = 13.5 + 33.2 - 0.4 + 3.5 - 4.2 + 0.8$$

$$= 46.4 \text{ decibels}$$

(3) Using tables. Representative mesh and perforated sheet SE measurements are shown in tables 5-14 and 5-15. These tables provide data on a variety of material forms including meshes, perforated sheets, and cellular structures in protecting against low-impedance, high-impedance, and plane waves. Table 5-16 gives both calculated and measured values of SE for the No. 22 15-mil copper screen in the example for magnetic, plane, and electric waves for several frequencies. The SE of the screen increases with frequency for magnetic fields, declines with increasing frequency for plane waves, and is largely independent of frequency for electric fields.

(4) Shield dimensions. Screen shields usually consist of a single or double layer of copper or brass mesh of No. 16- to 22-gauge wire with openings no greater than 1/16 inch. A mesh less than 18 by 18 (wires to the inch)

should not be used. The mesh wire diameter should be a minimum of 0.025 inch (No. 22 AWG). If more than a nominal 50 decibels of attenuation is required, the screen should have holes no larger than those in a 22-by-22 mesh made of 15-mil copper wires.

(5) Galvanized hardware cloth. A mesh construction in which individual strands are permanently joined at points of intersection by a fusing process that provides good, fixed electrical contact affords strong SE and is not degraded by wires oxidizing and eliminating electrical contact. An example of this type of construction is galvanized hardware cloth. These screens are very effective for shielding against electric (high-impedance) fields at low frequencies because the losses will be mainly caused by reflection. Screens of this type are commercially available for EM closing of open apertures to allow for ventilation. They usually are not used to construct enclosures. Installation for aperture control is done by connecting a screen around the edge of the opening.

b. Honeycomb. Honeycomb panels are formed as a series of cylindrical, rectangular, or hexagonal tubular openings. Each opening acts as a waveguide-below-cutoff attenuator. The depth of the aperture determines the amount of attenuation realized and the diameter of each opening determines the cutoff frequency. For a rectangular waveguide attenuator, the cutoff frequency, f_o, is given by (ref 5-6)--

$$f_o = \frac{6920}{W} \text{ megahertz.} \qquad \text{(eq 5-23)}$$

For a circular guide--

$$f_o = \frac{5900}{W} \text{ megahertz} \qquad \text{(eq 5-24)}$$

where f_o = cutoff frequency for the dominant mode in megahertz and W = inside diameter of a circular waveguide in inches, or the greatest dimension of a rectangular waveguide in inches.

(1) Attenuation. At any frequency, f_a, the waveguide attenuation is a function of the ratio L/W, where L is the depth of the guide. For f_a much less than cutoff (that is, $f_a < 0.1f_c$), the attenuation in decibels per inch for cylindrical waveguides is approximated by the relation--

$$a = \frac{32}{W} \qquad \text{(eq 5-25)}$$

where W is in inches. For rectangular waveguides, the attenuation in decibels per inch is--

$$a = \frac{27.3}{W} \qquad \text{(eq 5-26)}$$

Equations 5-23 through 5-26 are valid for air-filled waveguides with length-to-width or length-to-diameter ratios of three or more.

(2) Rectangular and circular waveguides. The attenuation of a waveguide for frequencies below cutoff is shown in figure 5-22 for a rectangular waveguide and in figure 5-23 for a circular waveguide, both for an L/W ratio of 1. For ratios other than 1, the value in decibels obtained from the curve must be multiplied by L/W to obtain the correct attenuation value. For example, an SE of over 100 decibels can be obtained at 10,000 megahertz with a 0.25-inch-diameter tube, 1 inch long, or a 1/2-inch-diameter tube, 2.25 inches long.

(3) Maintaining airflow through honeycomb. Metal honeycomb is usually used to provide EM closure of open apertures required for ventilation and/or cooling, although screening and perforated metal sheets can also be used. These materials provide for air flow through an enclosure while maintaining the SE. All such materials present an impedance to airflow compared with an open aperture of the same dimensions. Of the types listed, honeycomb provides the maximum EM attenuation with the least reduction in air flow. Figures 5-24 and 5-25 compare air impedance properties for honeycomb and screen materials. If these types of materials are used, it is necessary to increase the overall aperture dimensions to achieve the same air flow as with an unprotected aperture.

5-7. Layered shields. When shielding is mainly by reflection loss (high frequencies), two or more layers of metal, separated by dielectric materials and yielding multiple reflections, will provide greater shielding than a single sheet of the same material and thickness. Separation of the two metal layers is necessary to provide additional discontinuous reflection surfaces. When two metallic sheets of the same material and thickness are separated by an air space, the penetration and reflection losses increase but are not double the value (in decibels) of a single sheet. Benefits of layered shielding also have been noted with magnetic sheet material. With high permeability metal, two layers of material increase the SE by roughly 15 decibels compared with a single layer over a fairly broad frequency range.

5-8. Reinforcement steel (rebar).

a. Concepts. Many buildings are built with walls reinforced with steel bars or wire mesh. This structural arrangement will provide limited shielding to low-frequency fields, but not to high-frequency fields, if the conductors are welded or otherwise electrically bonded together at all joints and intersections to form many continuous conducting loops or paths (mesh structure). Further, the rebar structure must be continuous around the volume to be shielded. The SE obtained is not cost-effective. If rebars are

intersection-welded only to provide shielding, the other approaches discussed would be more cost-effective. If the rebars must be intersection-welded for structural support, limited shielding is obtained at no additional cost. In this case, the SE obtained is proportional to the magnitude of circulating currents induced by the impinging EM field in and about the four walls, floor, and ceiling of the structure. The degree of shielding depends on the size and shape of the volume to be shielded, the diameter of the bars and spacing (the distance between bar centers which determines aperture size), the electrical and magnetic properties of the reinforcement steel materials (conductivity and relative permeability), and the frequency of the incident wave due to the aperture size.

(1) Electrical assumptions. It is much simpler to calculate shielding obtained using reinforcement steel if electrical conductivity, permeability, diameter, and spacings are within a practical range associated with reinforcement steel (rebar) used for normal construction. The following discussion assumes a conductivity of $g_r = 6.5 \times 10^6$ mho per meter and a permeability of $u_r = 50$ which is typical of rebar. The frequency assumed in these calculations was 10 kilohertz.

(2) Reinforcement dimensions. The bars' diameter and spacing depend on the building's structural design. Typical bar diameters chosen for the following calculations range from 20 to 60 millimeters and spacings range from 9 to over 50 centimeters (table 5-17 lists some typical rebar sizes). Bar diameters can vary 10 percent from nominal values without seriously affecting the accuracy of shielding data calculations.

(3) Magnetic attenuation. The family of curves shown in figure 5-27 demonstrates the magnetic attenuation for an enclosure which is 5 meters high. The curves represent the center area attenuation. The other dimensions vary over a 5-to-1 range. Figure 5-28 shows the same information for a 10-meter enclosure height. Bar diameters are 4.3 centimeters with a spacing of 35 centimeters on centers. Provisions for determining decibel correction factors to these figures for other bar diameters and spacings are as follows, based on room proportions:

(a) Height of 10 meters or greater--use curves for 10 meters.

(b) Height between 5 and 10 meters--use curves for 5 meters.

(c) For variations in width dimension (J)--use curve equal to or just less than the required value.

(4) Double-course reinforcement. The room dimensions, bar spacing, and diameters shown in figure 5-27 are typical and cover most cases found in practice. The curves in figure 5-28 can also be applied to double-course reinforcing steel construction if the single-course spacings are halved when determining attenuation corrections for double-course bar construction. In

addition, table 5-17 lists examples of corrections to be used in various cases.

(5) Degradation of shielding effectiveness. The attenuation values obtained from figures 5-27 and 5-28 (with corrections as necessary according to fig 5-29) can be obtained at the center of the room. Less shielding will be available near the edges of the room. Figure 5-30 indicates that SE can be expected to degrade by 10 decibels at a distance of about 10 centimeters from the wall. The degradation curve is valid for room heights between 7.5 and 12.5 meters and lengths ranging from 12.5 to 100 meters. It is also suited for use with solid steel plate and wire mesh constructions that have the same type of SE degradation away from the central area.

(6) Sample calculations. The sample calculations in paragraphs b and c below show how the various curves are used. To determine the center area attenuation and the attenuation near a wall for single-course and double-course reinforcement bar-type construction, assume H = 6 meters, J = 10 meters, L = 50 meters, reinforcing steel diameter = 3.5 centimeters plus 10 percent, and reinforcement steel spacing = 37 centimeters, center to center.

b. Single-course reinforcing steel construction. Since H = 6 meters, use the curve for H = 5 meters (fig 5-27). For J = 10 meters and L = 50 meters, the attenuation is 24.5 decibels. For 3.5-centimeter-diameter rebars on 37-centimeter centers, use the correction factor of minus 2 decibels from figure 5-29. Thus, the center area attenuation is 24.5 - 2 = 22.5 decibels. This will be the attenuation in the room beyond 2 meters of the shielding rebars. Assume that the bars used are near the outside of the wall so that a 45-centimeter wall thickness is between the rebar and an equipment cabinet. The attenuation at this point (from fig 5-28) would be 22.5 - 3.5 = 19 decibels.

c. Double-course reinforcing steel construction. For this calculation, consider that center area attenuation = 24.5 decibels (from fig 5-27), 37-centimeter spacing, 3.5-centimeter diameter (read from curve F, fig 5-29); 19-centimeter spacing (for double steel) = 9.2 decibels, and the total attenuation = 33.7 decibels for double rebars. For equipment against the wall, assume the inner bars are 10 centimeters from an inside wall of the room. Figure 5-28 gives -10 decibels for this distance. The net shielding at this point is 33.7 - 10 = 23.7 decibels.

(1) Effect of bar size and spacing. Figure 5-31 shows the low-frequency SE for welded reinforcement steel as a function of frequency for different mesh sizes and reinforcement steel diameters. When compared with the data in figures 5-27 and 5-28, this figure suggests that decreasing the space between bars and increasing the bar diameter will increase the SE of reinforcement steel. Generally, decreasing the space between bars increases the attenuation a few decibels, whereas increasing it does the opposite. Increasing the diameter of the bars also increases the attenuation afforded by the walls, whereas decreasing the reinforcement bar diameter lowers the protection.

(2) Welding intersections and splices. To increase the reinforcement bar's SE, all intersections must be welded to insure minimum electrical resistance at the joints. Other mechanical tying or clamping should follow standard construction practices to insure mechanical strength, but this should not replace welding for electrical purposes. Figure 5-32 shows typical welding practice for construction steel reinforcement bars. Welding can reduce the rebar's strength to some degree. When possible, a continuous electrical loop must enclose the whole wall, with all rebars welded firmly to the loop at crossings and terminations. Unavoidable splices should be welded over a length at least three times the bars' diameter. Interruptions in the bars, as at vents or doors, should be welded to heavy frames as figure 5-33 shows.

(3) Welding at corners. Reinforcement steel can be formed into continuous loops welded together at the building corners (ref 5-7). For two layers of 10-millimeter reinforcement steel bars welded to 16-millimeter bars at the corners, a 15-millimeter grid gave 35 and 39 decibels at 150 kilohertz and 1 megahertz, respectively. A 25-millimeter grid gave 26 and 27 decibels at 150 kilohertz and 1 megahertz, respectively. When the openings become an appreciable part of a wavelength, the SE decreases.

(4) Welded wire fabric. Welded wire fabric embedded in the walls of a room or building can provide attenuation if individual fabric wires are joined to form a continuous electrical loop around the perimeter of the area to be shielded. At each seam where the mesh meets, each wire must be connected by a continuous strip.

(5) Attenuation from welded wire fabric. The attenuation at the center of the enclosed room for welded wire fabric can be obtained from the same set of curves used to find values for reinforcing steel bars. An attenuation correction factor (increment) will be needed (table 5-18).

5-9. Earth cover electromagnetic wave attenuation.

a. Absorption loss. In the environment outside a facility, nonmetallic materials such as soil and rock can contribute to shielding, especially at higher frequencies (i.e., above 10 megahertz). This depends on the material's conductivity, permittivity, and permeability. Since these materials are poor conductors, their conductivity is low and is influenced strongly by water content. Typically, the conductivity in mhos per meter over the frequency range in kilohertz to megahertz varies from 3×10^{-4} to 8×10^{-3} at 1 percent water content, from 8×10^{-3} to 3×10^{-2} at 10 percent water content, and from 10^{-1} to 1.5×10^{-1} at 50 percent water content; it is 2×10^{-1} at 100 percent water content (ref 5-5). Table 5-25 shows the electrical conductivity of various soils and rocks. Soils and rocks have a wide range of water content, making their electrical conductivities vary. Table 5-20 lists the absorption loss (A) for soils with 1, 10, and 50 percent water content at selected frequencies. Even for a soil water content of 50 percent, the absorption loss

becomes significant only at frequencies higher than about 10 megahertz. Thus absorption loss in soil will be effective as a shield only at the higher HEMP frequencies (above 10 megahertz).

b. Reflection loss from soils. Determining the reflection loss from soils is a complex problem due to the inherent inhomogeneity of soil and rock strata. Typically, soil impedances are relatively high, and thus, for the plane wave electromagnetic fields from HEMP, reflection losses will be low. For conservative designs, the facility designer should assume no reflection loss for the soil and rock overburdens of buried facilities.

5-10. Shield joints and seams.

a. Shield fabrication. An ideal shielded enclosure would be one of seamless construction with no openings or discontinuities. However, practical enclosures must have seams to facilitate construction. Each seam represents a potential discontinuity in the shield, and the enclosure SE may be degraded if the seams are not designed properly. Optimal seam design through the use of permanent bonds (welding, brazing) makes joints continuous. For enclosures used in an inside environment, satisfactory results may be obtained with closely spaced rivets or spot welding or with RF gaskets if care is taken when preparing the mating surfaces and installing the fasteners. However, these techniques tend to form fasteners that degrade over time, so that welding probably provides the most cost-effective method in terms of life-cycle cost. Bolted or riveted shields are not recommended for use on facility exteriors. Shields must have structural support to prevent possible degradation of the seam by distortions. Free-standing shielded enclosures are available commercially and are suitable for use as individual enclosures inside a facility for equipment calibration and low-level shielding (up to 50 decibels). For an overall shield lining, the facility's structural design must incorporate and support the shield.

b. Seam bonding. Seams or openings in enclosure or compartment walls, with proper bonding, will provide a low impedance to RF currents flowing across the seam. For high-quality shielding (60 decibels and higher), mating surfaces of metallic members in an enclosure should be bonded together by welding, brazing, sweating, swagging, or other metal flow methods. To ensure that the bonding techniques are suitable and done correctly, design principles in paragraph 5-16 should be used. The most desirable bond is achieved through a continuous butt or lap weld.

(1) Metal thickness. For welded joints, the metal chosen must be thick enough for easy welding and it must not buckle under the welding heat. Welds in steel at butt joints should have full penetration, with the minimum thickness equivalent to 3-millimeter steel as shown in figure 5-34. For a facility shield, the recommended minimum thickness is usually 14 gauge. Metal-inert gas (MIG) welding should be used to ensure good electrical conductivity. Fillers used in welding should have conductivity and permeability equal to or better than those of the shield material.

(2) Mating surfaces. All mating surfaces must be cleaned before welding. Also, all protective coatings with a conductivity less than that of the metals being bonded must be removed from contact areas of the two mating surfaces before the bond connection is made. Mating surfaces should be bonded immediately after protective coatings are removed to prevent oxidation. Refinishing after bonding is acceptable from the standpoint of SE, but can lead to problems in detecting faults by visual inspection. Seam backup plates should be used for thin sheets (16 to 12 gauge). The plates must be held in place firmly before welding to prevent buckling.

(3) Soldering. Soldering is an acceptable way to join solid metal sheets for WBCs and other areas sensitive to the high temperatures of welding. Care must be taken during soldering because joint expansion can crack the connection. Also, fluxes in the solder process can cause corrosion later, which will degrade the bond. If soldering is the only suitable way to join screens, use only nonreactive or noncorrosive inorganic flux for electrical bonding.

c. Mechanical joining (shielding reqts below 60 decibels).

(1) Mechanical seams. Rather than welding or soldering seams, it is possible to join them mechanically. Bolts, screws, rivets, and various types of clamp and slide fasteners have been used for this purpose. The same general requirements for clean, intimate contact of mating surfaces and minimized electrolytic (cathodic) effects apply to temporary bonds. Positive locking mechanisms should be used to ensure consistent contact pressure over an extended time. Figure 5-35 shows some typical overlapping, bolted joints, all of which are acceptable when a 60-decibel or less SE is required. Pressures of 25 kilograms per linear centimeter are recommended for joint overlaps of 4 to 100 centimeters to maintain metal-to-metal contact (ref 5-7). This contact can be improved by galvanizing steel panels. For thin panels, bolts should be close enough to ensure uniform panel edge contact, with stiffeners running along the joint to spread forces and maintain high pressure between the bolts and to prevent buckling. If these methods are used for exterior shields exposed to weather, the seam must be weather-sealed to prevent corrosion.

(a) Bolts, nuts, screws, and washers that must be made of material different from the surfaces to be bonded should be higher in the electromotive series (table 5-21) than the surfaces. This measure ensures that material migration will erode only replaceable components.

(b) A critical factor in nonwelded mechanical joints is the linear spacing of the fasteners or spot welds. The gaps between fasteners are slots in the shield that leak incident energy. The data in figure 5-36 show that, for fastener spacings less than 65 centimeters and frequencies less than 100 megahertz, the coupled HEMP interference increases proportionally with frequency. Figure 5-37 shows the sensitivity of this parameter for a 1.27-

centimeter aluminum lap joint at 200 megahertz. Bolted connections require periodic maintenance (tightening). They are acceptable for removable access panels.

(2) Seams with gaskets. The SE of direct metal matings used as temporary bonds can be improved greatly using flexible, resilient metallic gaskets between shielding surfaces to be joined. Clean metal-to-metal mating surfaces and good pressure contact are required. ("Good" pressure contact is roughly 25 to 30 percent compression; however, the gasket manufacturer's recommendations should be followed for a specific gasket.)

(a) The major material requirements for RF gaskets are compatibility with the mating surfaces, corrosion resistance, suitable electric properties, resilience (especially when repeated compression and decompression of the gasket is expected), mechanical wear, and ability to form into the desired surface.

(b) Based on electrical properties and corrosion resistance, it has been found that the single most important EMI gasket parameter is the coating material applied to the gasket base metal (ref 5-8). An often preferred coating material is tin, applied thick enough to withstand nominal wear without erosion to the base metal. An excellent guide to the selection of EMI gasket coating or finish material as a function of gasket type and gasket base metal is ARP-1481, Corrosion Control and Electrical Conductivity in Enclosure Design (ref 5-9). This guide should be consulted before making final EMI gasket selection.

(c) For seams that require moisture/pressure sealing as well as RF shielding (such as an exterior door), combination rubber-metal seals are available. These include metal mesh bonded to neoprene or silicone, aluminum screen impregnated with neoprene, convoluted wires in silicone, conductive adhesives and sealants, and conductive rubber. Table 5-22 summarizes the advantages and drawbacks of these gaskets as well as the nonsealing type.

(d) Silver-filled silicone rubber gaskets can be obtained in sheet, die-cut, molded, or extruded form. The most popular and economical of these types is the extrusion. These gaskets are usually used in applications for which both electromagnetic and weather sealing are required. Figure 5-38 shows typical extruded shapes and gives recommended deflection limits for various shapes and sizes. Earlier comments on thickness, shape, and mounting methods for wire mesh gaskets also apply to conductive rubber gaskets.

(e) SE of silver-filled (or silver-plated, copper-filled) silicone is acceptable for low-performance (less than 60 decibels) enclosures between 15 kilohertz and 10 gigahertz. Best results are achieved with molded or extruded cross sections held in grooves.

(f) Metal mesh gaskets can be held in place by sidewall friction, soldering, adhesive, or by positioning in a slot or on a shoulder. Soldering

must be controlled carefully to prevent solder from soaking into the gasket and destroying gasket resiliency. Adhesives (especially nonconductive ones) should not be used on gasket surfaces that mate for RF shielding purposes--auxiliary tabs should be used. The necessary gasket thickness depends on the unevenness of the joint to be sealed, gasket compressibility, and the force available. The shape required depends on the particular use as well as the space available, the way the gasket is held in place, and the same parameters that affect gasket thickness. Figure 5-39 shows typical uses and mounting methods for gaskets.

(g) Typical gasket pressures for obtaining effective seals range from 5 to 100 psi. The specific pressure needed will depend on the type of gasket used, the thickness of metal to be joined, and the spacing of bolts or screws in the joint. Too little pressure will not preserve good electrical contact. Too much pressure, combined with lack of stiffness of mating members and too much spacing between bolts, can cause the shield to deform as shown in figure 5-40. Shield imperfections also can damage gaskets and should be corrected before installation is completed.

(h) The most demanding use for EMI gasket materials in shielded facility construction is as gasketed seams around shielded doors and access panels that must be opened periodically. It has been shown that the most severe shielding degradation occurs around these seams for all EMI gasket materials (ref 5-8). The shielding loss at these places is not rectified simply by using the best EMI gasket, but involves geometric design and materials selection (including surface coatings) of the gasket mating surfaces (for example, the door channel) along with regular maintenance. A discussion of these factors, along with recommended door channel design, is in reference 5-8. Figures 5-41 through 5-43 show some door channel designs that include many such "optimal" features using three different types of EMI gaskets. Even with these designs, however, periodic surface/gasket cleaning, lubrication, or both would be required to maintain a reliable shield.

(3) Gasket selection--summary. The recommended gasketing for 100-decibel shielded doors and access panels can be summarized as follows:

(a) Shielded doors. The best choices (for HEMP) are (ref 5-8)--

- Fingerstock, double-row in slot.

- Knife-edge closure.

Note: if a higher level of shielding is required than that attainable with the knife-edge/fingerstock door, then the only choice is the air-expansible door which has knurled or thermally sprayed mating surfaces. These doors are expensive and require much more space and maintenance than the knife-edge door.

(b) Access panels. For these panels, use--

- Preformed or fitted mesh gaskets.

- Monel or Ferrex material (fig 5-39).

- Manufacturer's recommended closure pressure.

5-11. Internal cable and connectors.

a. Shielding effectiveness. Cables and conduit for electrical wiring are a primary source of damaging HEMP-induced transients. Thus, if proper shielding methods are not used, the transmitted HEMP transient signal can penetrate zone boundaries to sensitive electronics, causing upset or damage. Shielding prevents the HEMP coupling by internal conductors.

(1) Analysis methods. In cable shield analysis, two methods often are used to describe internal cable conductor isolation from external shield currents. The first is the SE of the cable, with SE given as the ratio in decibels of the external shield current to the internally induced conductor current versus frequency. The other method used to describe external shield current isolation is surface transfer impedance, in which transfer impedance is related to the voltage drop per unit length along a cable due to the current flowing on the shield.

(2) Transfer impedance. SE can be related to surface transfer impedance if the center conductor's total resistance and the circuit load are known. This relationship can be expressed as--

$$Z_t \text{ (decibels)} = 20 \log R_L - SE \quad (L \ll \text{wavelength}) \qquad \text{(eq 5-27)}$$

where the units are in decibels referenced to 1 ohm and L is the length of the shield. This relationship shows that transfer impedance is inversely proportional to SE. Figure 5-44 shows this relationship for a braided coaxial cable. In this case, $R_L = 100$ and $Z_o = 50$ ohms where Z_o is the line's characteristic impedance.

(3) Cable length. The relationship between SE and length can be expressed as--

$$SE = 20 \log (L_1/L_2) \qquad \text{(eq 5-28)}$$

where SE is a decrease or increase that results from increasing or decreasing the cable length. L_1 is the original length, and L_2 is the new length (refs 5-10 through 5-12). The surface transfer impedances of solid-tubular shields, single- and multilayer braided coaxial cable, tape-wound high-permeability communications cable, and connectors have been determined analytically and experimentally. These analyses use transmission line models and involve the determination of current induced on the cable center conductor by diffusion through a solid shield and by field penetration through apertures. Also, the

voltage drop along the shield as a result of series resistance at interconnection points, which induces currents in the center conductor, has been found through experiments.

(4) Cable shielding methods. The most common methods of shielding cables are: braid, spirally wound shields of high permeability materials, rigid conduit, and flexible conduit. Shielded cables on the market include shielded single conductor, shielded multiconductor, shield-twisted pair, and coaxial. Cables are also available with single and multiple shields in many different forms and with a variety of physical properties.

b. Braided cable. A braid of woven or perforated metal fabric is used for cable shielding when the shield cannot be made of solid material. Figure 5-45 shows a braided wire coaxial cable. Advantages are flexibility, light weight (single shield only), and ease of cable termination. However, for radiated fields, the SE of woven or braided materials decreases with increasing frequency because of field penetration through the braid apertures. SE increases with the density of the weave or number of insulated shield layers by a reduction of the current diffusion component in the shield model. Figure 5-46 shows the relative SE of single-, double-, and triple-braided cables as a function of frequency. Reference 5-13 gives additional information on double and triple shields.

c. Tape-wound shield. Commercial power cables have center conductors wrapped with lossy materials. Figure 5-47 shows two typical cable designs. The lossy wrapping consists of a high-permeability material such as silicon iron tape. As the HEMP transient propagates along the shield, high-frequency components of the pulse are attenuated. Figure 5-48 shows the attenuation versus frequency for a typical lossy-wrapped shield. Tape-wound shields have use when shield flexibility and low cost are desired. Because of the poor SE of typical single-layer wrapped cable, an outer layer of braid often is incorporated into the cable design. Tape-wound shields have been analyzed (ref 5-13) and have been modeled as a solenoid wound about internal conductors. For very large shield currents, arcing between turns can occur, resulting in greater SE. However, the arcing itself may be undesirable for other EMI-related reasons.

d. Twisted-pair cable. To improve the common-mode rejection and SE of a signal transmission line, twisted-pair and shielded-twisted-pair cables often are used. Common-mode coupling is defined as occurring when the signal is induced between the shield and either or both interior conductors of a pair. Figure 5-49 shows the induction loop areas formed in twisted-pair cables. With a time-varying uniform magnetic field impinging radially on the twisted-pair cable, the currents induced in adjacent loops approximately cancel. The currents do not completely cancel because the induction loop area in the direction of the magnetic field is less than one twist of the cable pair (ref 5-10). Because of the small loop areas formed by the cable, the coupling usually is small.

(1) Using twisted pairs. With a shielded-twisted pair, common-mode coupling due to external fields is greatly reduced and spurious signal pickup can be almost eliminated on signal lines. For maximum benefit from shielded-twisted pairs, they should be used in conjunction with proper grounding, bonding, and common-mode rejection (balanced lines) methods.

(2) Shield termination. Figure 5-50 shows experimental results of the effects of improper shield termination on the SE of shielded-twisted pairs (ref 5-14). In this experiment, shield terminations at the receiving end were varied and the shield was terminated in an RF connector at the source end. Measurements were made over the band of 100 kilohertz to 50 megahertz. The figure shows five cases. In the first four, only the common-mode current was measured. In case 5, the differential-mode current for a balanced configuration was measured. The differential mode is defined as signal injection into the wire pair of opposite polarity. The figure shows that the balanced configuration offers more attenuation up to about 5 megahertz. At high frequencies, it is hard to balance a circuit. At low frequencies, a twisted pair in a balanced configuration with an unterminated shield offers more shielding than any of the unbalanced types with a properly terminated shield. The worst performance was seen in an unbalanced load with no shield termination (case 1). In this case, use of a shielded-twisted pair provided no advantage over a single wire, except for electrostatic protection. For HEMP protection, the shielded-twisted pair in a balanced transmission line configuration is preferred (case 4). The shield can be conduit, braid, or tape-wound. Conduit is recommended if the cable does not have to be flexible or removable. If it does, braid is preferred over tape-wound cabling.

e. Cable connectors. EM energy leakage through the outer shell of a cable connector can result from an improper connection between the connector plug and receptacle. The cable connector can be viewed as part of the cable shield and may contain cracks, slits, or lossy contacts through which EM energy can pass. In a transmission line model of the cable and connector, the connector can be considered a voltage source that drives the core-to-shield transmission line. Terms that enter into the analysis are a series IR drop due to lossy contacts and a magnetic field component due to field penetration through slits and cracks. Both components can be significant, but one or the other usually dominates (refs 5-10 and 5-13).

(1) Transfer impedance. The transfer impedance, Z_t, can be expressed as--

$$Z_T = R_o + jwM_{12} \qquad \text{(eq 5-29)}$$

where R_o is the resistance measured across the connector, j is $(-1)^{0.5}$, w is radian frequency, and M_{12} is the mutual inductance between the external shield circuit and the cable's internal conductors. The transfer impedance can be measured by passing a current through a cable sample that contains the connector and by measuring the open-circuit voltage induced on the conductors inside the shield (ref 5-13).

(2) Common connectors. Figure 5-51 shows the construction of a few common connectors used in HEMP protection. These connectors are designated N, SMA, and TNC. All have threaded connections and meet the requirements of MIL-C-39012 (ref 5-15). Reference 5-13 presents typical values of R_O and M_{12} for several cable connectors. These parameters were obtained experimentally using a triaxial test method. (See chapter 6.) Anodized connectors must not be used because of the very high R_O term. Also, R_O and M_{12} for type N connectors were not measurable, indicating high SE.

(3) Connector materials and finishes. Cable connector SE strongly depends on the connector material, whether it is a threaded or bayonet type, the tightening torque on threaded connectors, and whether spring fingers and shielded gaskets are used. For example, figure 5-52 shows the contact resistance of two aluminum surfaces with various platings and coatings. Figure 5-53 shows the SE of a connector with different finishes. SE values for all finishes are about the same except for anodized aluminum, which meets most environmental specifications but suffers degraded SE (ref 5-16).

(4) Threaded connectors. As discussed earlier, threaded connectors are preferred for use in HEMP protection because of higher SE. For threaded contacts, SE increases with higher tightening torque, especially with vibration, as figure 5-54 shows.

(5) Bayonet connectors. Bayonet connector SE can be increased by using peripheral spring fingers in the connector shell. Figure 5-55 shows the improvements in SE from adding spring fingers for both bayonet and threaded connectors.

(6) Using gaskets. Using gaskets between interfaces also increases connector SE. Figure 5-56 shows the improvements when a woven-wire mesh gasket is used. Metalized gaskets (woven wire and rubber) can also be used (ref 5-16).

5-12. Conduit and conduit connections.

a. Solid conduit. Solid conduit (or any solid metal shield) provides the highest SE since there are no apertures. The SE of conduit is maximized by using large-diameter, thick-walled tubing to reduce the diffusion component. Methods for determining the conduit SE (transfer impedance) experimentally are described in chapter 6. The transfer impedance also can be determined analytically. The tubular shield consists of a metal tube of uniform cross section and wall thickness. Coupling through the shield can occur only by diffusion of EM fields through the walls of the tube. The transfer impedance of thin-walled tubes such as this is (ref 5-13)--

$$Z_T = \left[\frac{1}{2(pi)asT} \right] \left[\frac{(1 - j)\ T/d}{\sinh\ (1 + j)\ T/d} \right] \qquad \text{(eq 5-30)}$$

where a is the radius of the shield, s is the shield conductivity, d is the skin depth in the shield, T is its wall thickness. The d value is calculated by--

$$d = \frac{1}{(pi)fus} \qquad \text{(eq 5-31)}$$

where u is the permeability and f is the frequency. It is assumed that the wall thickness T is small compared with the radius of the tube and that the radius is small compared with the smallest wavelength of interest. It is also assumed that the shield is made of a good conducting material (metal) so that the displacement current in the shield material is negligible compared with the conduction current. At low frequencies, such that T/d << 1, the magnitude of the transfer impedance is (ref 5-13)--

$$|Z_T| = \frac{1}{2(pi)asT} = R_o \ \left(\frac{T}{d} << 1 \right) \qquad \text{(eq 5-32)}$$

where R_o is the direct current resistance of the tube per unit length. At high frequencies, such that $|T/d|$ >> 1, sinh (1-j)T/d approaches the value 1/2 exp(1+j)T/d, and the magnitude of the transfer impedance at high frequencies is--

$$|Z_T| = 2\ e^{-T/d} R_{hf}, \quad \left(\frac{T}{d} >> 1 \right) \qquad \text{(eq 5-33)}$$

where R_{hf} = 1/[2(pi)ads]. That is, R_{hf} is the resistance of a sheet 1 meter long, 2(pi)a wide, and d thick, with conductivity s. The phase of the transfer impedance at high frequencies is--

$$\text{phase} = -\frac{T}{d} - \frac{(pi)}{4}, \quad \left(\frac{T}{d} >> 1 \right) \qquad \text{(eq 5-34)}$$

Figure 5-57 is a plot of the magnitude and phase of the transfer impedance (normalized to the low-frequency value R_o) for a tubular shield. The asymptotic approximations for the magnitude and phase are also indicated in figure 5-57. As can be seen from equation 5-33 and figure 5-57, the magnitude of the transfer impedance decreases very rapidly as T/d increases above unity, so that very little of the high-frequency spectrum is permitted to penetrate to the interior of the shield. The transfer impedance and values of R_o and f_d (the frequency at which T/d = 1) are given in figure 5-58 for trade sizes of rigid steel conduit (refs 5-13, 5-17, and 5-18).

(1) Coupling mechanism. The main HEMP coupling mechanism for conduit is leakage at conduit interconnection points. HEMP coupling occurs as a

result of field penetration through apertures at joints (cracks in welded sections) and as a result of voltage drops across resistive interconnects (rusted threads of a conduit coupler).

(2) Connectors. Conduit sections can be connected by welding or by couplers and unions. Welding conduit sections forms a continuous shield. However, leakage can occur at cracks in the weld or with high-resistance welds.

(3) Flaw impedance. A conduit coupling can provide SE as high as the conduit itself if installed properly. The most important factor affecting leakage through joints is the quality of electrical contact between the joints' mating surfaces. Figure 5-59 is a plot of flaw impedance versus frequency for a taper-threaded, wrench-tightened conduit coupling. Below about 10 megahertz, the flaw impedance is nearly resistive and independent of frequency. This implies that the wave shape of an induced voltage is nearly identical to the waveform of the exciting current, provided the maximum frequency of the incident waveform is less than 10 megahertz.

(4) Coupler threads. Experiments have shown that conduits with couplings that have clean, unrusted threads can have shielding almost equal to that of continuous (welded) conduit if properly torqued (ref 5-18). If the threads are rusty before assembly, shielding degrades substantially; thus, careful cleaning of the threads is necessary before assembly. From a shielding standpoint, standard conduit couplings are inferior to line pipe couplings which have tapered threads. (Most couplings are straight-threaded.) The coupling joint's d.c. resistance indicates thread quality, but does not account for possible apertures. Applying silver- or copper-loaded conductive caulking compounds to the threads before assembly has proven advantageous for short-term applications if the threads are clean and properly torqued. However, these caulking compounds can cause severe corrosion due to dissimilar metals contact and are therefore not recommended.

(5) Leakage at threads. Leakage at threads (couplings between conduit sections and connections between conduits and conduit hardware) usually results from poor assembly or corrosion. Joined sections must be rust-free, aligned properly, and adequately torqued to provide high HEMP shielding effectiveness. Factory-cut threads should be specified to be zinc-plated and, as such, require no coatings. Field-cut threads should be coated with a primer (e.g., red lead or zinc-rich) to prevent rust.

(6) Diffusion current. A secondary HEMP coupling mechanism for conduit is the diffusion current (i.e., the penetrating current related to skin effect). Energy coupling by this mechanism has a much slower risetime and longer duration than leakage current. The magnitude of the diffusion current response of cables within conduits can reach disruptive levels for thin-walled conduit. If the conduit runs are long, the conduit-induced currents and circuit impedances are high. Figure 5-60 shows a diffusion current response determined experimentally for a 2.5-centimeter, rigid-walled steel conduit,

3.3 meters long. The applied current pulse had a double exponential wave shape with less than 10 nanoseconds risetime and 4 microseconds fall (E-fold) time (refs 5-18 and 5-19). Diffusion current magnitudes can be determined from the transfer impedance calculations described previously.

b. Flexible conduit.

(1) When required. If relative movements are expected between exterior conduits and the shielded structures, flexible connections may be required at exterior walls to accommodate displacements.

(2) Metal bellows. Figures 5-61 and 5-62 show typical frequency domain flaw impedances (i.e., impedance associated with a flaw in a flexible joint) for samples of metal bellows flexible conduit. The flaw impedance contributes only to diffusion current. A comparison of the two figures shows the effect of material thickness on the frequency domain flaw impedance. The diffusion current can be reduced by placing a metal braid over the metal bellows. If the braid has good electrical contact at each end (bonded to the conduit/enclosure), it can reduce the overall direct current resistance and increase the equivalent thickness through which the fields must diffuse. The bellows prevent direct field coupling through the many small holes in the braid. Thus, for maximum HEMP hardness, flexible conduit sections should have a wire braid covering and should be made of mild steel. Continuous seam bellows must be galvanized inside and outside to prevent corrosion. Another approach is to use high-permeability stainless steel for the flexible conduit. The thin walls of the flexible conduit show magnetic saturation (due to high diffusion currents) at much lower current levels than the thicker conduit material. The penetration depth of the diffusion current is the time integral of the current pulse. This is a nonlinear effect that can, under HEMP, reduce relative magnetic permeability to unity for the ferromagnetic material, thus reducing SE for the material. Therefore, thin materials should be used sparingly.

c. Conduit unions. Explosion-proof conduit unions have flat mating surfaces, with each conduit section held together by a threaded slip ring. The two halves of the union are threaded to the conduit sections and the connection is formed by the threaded slip ring.

(1) Sources of leakage. The most important places for possible leakage at a union are the threads and the slip-ring contact. As with couplers, unions must be rust-free and properly aligned and installed to provide adequate SE. Conduit systems should be built so that unions will not have to be used to align or draw together conduit sections. The alternative to proper installation and inspection is to specify expensive, nonstandard hardware.

(2) Pulse excitation tests. Various commercial and experimental unions have been tested for their SE under pulse excitation (ref 5-18). Unions tested were: a standard 25.4-millimeter steel union; a 25.4-millimeter pressure union (liquid tight); a Crouse Hinds "Thredmaker" 25.4-millimeter

union; an experimental HEMP union (fig 5-63); and a 25.4-millimeter expansion union (Crouse Hinds UNFL 37).

(3) Description of unions. The pressure union is a standard plumbing fixture. The "Thredmaker" is the Crouse Hinds Company's brand name for a union that can be installed on a nonthreaded conduit. The expansion union is designed to allow for expansion and contraction of conduit and to make up for conduit cut too short. It consists of a sliding sleeve structure and an internal ground spring. The HEMP union was designed to allow relatively large angular mismatch tolerance while keeping uniform electrical contact. The ball and socket joint provide this contact for the experimental union over a wide range of angular mismatch.

(4) Conclusions about unions. The following conclusions can be drawn from the test results:

(a) The pressure union has no shielding advantages over the standard electrical union,

(b) The "Thredmaker" union and the expansion union appear to have relatively high leakage rates with normal assembly and thus are not recommended for HEMP hardening requirements,

(c) The EMP union provides at least an order of magnitude more HEMP hardness over a standard electrical union. The optimal size and shape of the spherical mating surfaces have yet to be determined.

d. Conduit fittings and junction boxes. These fixtures provide access to the wires inside conduit. Conduit fittings are devices such as condulets and unilets. Figure 5-64 shows a Type C cast-iron conduit body. The cover plates for conduit bodies often are stamped from steel about 4.2 millimeters thick and are attached by two screws, one at each end. Neither a conduit body or a junction box should be used if very large HEMP currents are expected (Zone 0) to flow on the conduit. Both may be used in protected areas, however.

(1) Sources of leakage. The HEMP hardness of the standard commercial conduit body is poor. Various covers and gaskets have been tested (ref 5-18). Leakage is mainly due to surface resistance between the cover and the fitting wall and to flux linkage through the opening left between the cover and the fitting wall. Both factors can be reduced greatly by a machined cover and a machined fit inside the fitting housing, as figure 5-65 shows. For lowest resistance contact, the mating surfaces should be flame-sprayed with tin or zinc (soft metals for which surface oxides do not form a high resistance contact in a pressure fit). Some increase in EMP/EMI hardness (especially to radiated signals) can be obtained from a wrap-around junction box cover, as figure 5-66 shows. Unfortunately, unless covers and boxes are machined separately, tolerances are such that significant aperture and resistive leakage will occur.

(2) RF interference gaskets. RF interference gaskets (wire mesh, conductive rubber, convoluted wire) for conduit bodies, when tested by current injection, have not improved SE much over the standard cover without a gasket (ref 5-18). In MIL-STD-285 testing, however, this type of gasket did provide significant improvement at frequencies above 100 megahertz. If gaskets are used, they must be attached carefully to standard covers to prevent deformation caused by too much torque on the screws and to insure uniform gasket compression around all edges of the cover.

(3) Effect of no cover. With no cover, the conduit body presents an aperture, allowing very high-flux leakage into the conduit with a consequent increase in induced voltage on the internal conductor.

(4) Summary. In summary, standard commercial conduit bodies and junction boxes are not HEMP-tight. These access points should therefore be eliminated in Zone 0. When they must be used, only those with carefully machined cover fittings should be considered.

5-13. Terminal protection for electrical penetrations.

a. Transient suppressors. Because of the high energy level, rapid risetime, and short duration of a HEMP, special transient suppression devices often are needed to protect sensitive components from damage and upset. The types of devices available for EMP suppression are gas-filled tube spark gaps, metal oxide varistors (MOVs), silicon avalanche suppressors (SASs), and semiconductor diodes, such as high power zeners. Transient suppressors are used to protect a.c. and d.c. power lines, signal and control leads, and antenna leads. They also prevent arcing from cable outer shields to nearby metal objects, especially where they must be routed down towers or along the facility shield's exterior surface.

(1) Spark gaps. Gas-filled tube spark gaps consist of metal electrodes hermetically sealed to a glass or ceramic body. They are filled with gas of a high insulation resistance and low dielectric loss. As the voltage across the gap increases, a point is reached at which the gas ionizes and the gap conducts, with the voltage across the gap dropping to its glow voltage. If enough current is available, the gap further ionizes and transitions to the arc region with a reduction in voltage. As the current through the gap declines, a point is reached at which the gap extinguishes and returns to its normal "off" condition.

(a) For rapidly rising transients, the point at which the spark gap fires is different than the d.c. breakdown voltage. The firing voltage is a function of the transient rate of rise for a typical spark gap.

(b) The advantages of spark gaps are their high insulation resistance, low input capacitance, insensitivity to environmental changes, and high power-handling ability. The primary drawback is their slow turn-on time, which can be overcome by coincident use of an MOV as discussed below.

However, in Zone 0, a spark gap can handle the HEMP transient energy without damage.

(2) Metal oxide varistors. MOVs are composed mainly of zinc oxide with small amounts of bismuth, cobalt, manganese, and other metal oxides. The body structure consists of a matrix of conductive zinc oxide grains separated by insulating grain boundaries that provide PN junction characteristics. At low voltages, the boundaries do not conduct and as the voltage across the MOV increases, the resistance decreases exponentially.

(a) MOVs have very rapid turn-on times (in the low nanosecond range) and can dissipate large amounts of energy. The clamping voltage of the MOV is a function of the current through the unit and the transient rate of rise.

(b) The advantages of MOVs are their natural bidirectional operation, rapid turn-on times, ability to clamp at low voltage levels, high power-handling ability compared with semiconductors, and ability to be molded into a wide variety of shapes and sizes for use in special-purpose transient suppression devices (for example, pin filters with MOV and ferrite material). Drawbacks are high input capacitance in the off-state, degradation over time due to environmental and repeated electrical stress, large leakage currents in the off-state, and lower power-handling ability compared with spark gaps.

(3) Silicon avalanche suppressors. These are high-power semiconductor diodes with turn-on times in the picosecond range. However, they are limited in actual operation by their lead inductance, which lowers their turn-on times to those of MOVs. Their power-handling ability is less than an MOV's, but they clamp much better and their input capacitance is about the same. SASs are available in unidirectional and bidirectional configurations and in several hybrid forms to lower the device's input capacitance. Other advantages are their low leakage current in the off-state and their long-term stability with repeated pulsing.

(4) Semiconductor diodes. Because of their low power-handling abilities, standard semiconductor diodes and zener diodes are generally not used for HEMP protection external to equipment except in special hybrid surge suppressors. Low-capacitance diodes are used to lower MOV and SAS input capacitance in the off-state. By reducing the input capacitance, the device's insertion loss is reduced at high input signal frequencies. This makes it possible to protect high-frequency circuits with EMP transient suppressors as well as filters, alone or in combination, depending on the application.

(5) Features of transient suppressors. The important features of transient suppressors are--

(a) The d.c. breakdown voltage corresponds to the suppressor firing voltage when the transient has a very slow rate of rise. A suppressor to be

used in a circuit must be chosen such that the steady-state peak a.c. or d.c. operating voltage does not exceed the d.c. breakdown voltage of the protection device.

(b) Maximum firing voltage depends on the transient rate of rise and on inductive lead effects. Devices such as spark gaps have firing voltages significantly higher than the d.c. firing voltage because of the time required to cause ionization of the gas and subsequent arcing. Devices such as MOVs and SASs have very rapid firing times, which are mainly determined by inductive lead effects.

(c) Clamp voltage is the voltage level reached after the suppressor fires. For spark gaps, it is the arc voltage and for SASs and MOVs, it is often the d.c. breakdown voltage, though it may be higher, depending on the current dissipated through the suppressor (especially for MOVs) since these devices have inherent bulk and junction resistances associated with them.

(d) For maximum current-carrying ability, the suppressor should be specified to withstand the maximum surge current. For a spark gap surge arrestor, consideration must also be given to the steady-state follow current. If a spark gap is installed on an a.c. power line and if the gap fires at the beginning of the a.c. positive half-cycle, the gap will have current flowing through it until the end of the positive half-cycle. In many cases, the follow energy through the suppressor can exceed the surge energy.

(e) Maximum-energy handling capacity is the amount of power a device can handle over a certain period of time.

(f) Insertion loss in the off-state happens with all transient suppression devices in a circuit, rising as signal frequency increases. Since suppressors are placed in parallel to the circuits to be protected, it is desirable to maximize the suppressor's resistance in the off-state, but to minimize input capacitance and reduce lead inductance at high signal frequencies.

(g) Leakage current in the off-state for a transient suppressor is the current measured when less than the rated voltage is applied across the suppressor. The leakage current is very low for spark gaps and, in general, is highest for MOVs. Instead of leakage current, insulation resistance is often stated.

(h) Extinguishing characteristics are unique for suppressors such as spark gaps. When specifying spark gaps, a thorough look at the extinguishing properties such as extinguishing voltage and current is necessary.

(i) Environmental sensitivity is seen when devices, such as MOVs, degrade rapidly in environmental extremes. Degradation often is measured through changes in d.c. operating values and leakage current. Environmental

effects that influence suppressor operation include temperature, humidity, vibration, and atmospheric pressure.

(j) Repeated pulsing can affect all suppressors. A rapid succession of pulses can damage the suppressor because of the device's inability to handle the required amount of energy. The firing properties of some devices, such as MOVs, also change with each pulse, regardless of the time interval between pulses. In general, a device that degrades with each pulse is rated to handle a certain number of pulses in its lifetime.

(6) Installation criteria. Installation criteria for transient suppressors are--

(a) Mount suppressors in the EMP vault as close as possible to the point-of-entry (POE) panel. Minimize packaging and lead inductance by limiting the interconnecting lead lengths and using leads with a large cross section.

(b) Allow enough physical spacing (or time delay) between successive suppressors or circuits so that the initial suppressor fires properly. The required time delay can also be achieved by using a lumped element delay line. The amount of delay needed depends on initial suppressor firing time and on the response times of successive suppressors, filters, and circuits to be protected.

(c) The installation wire size must be able to withstand the surge current without being destroyed. Larger size wire also provides a lower inductance than a smaller wire of the same length. The wire should be stranded rather than solid core and should be installed to achieve a length as short as possible.

(7) Comparison of terminal protection devices. Table 5-24 compares the various types of terminal protection devices (TPDs) used for HEMP protection.

b. Filters. An electrical filter can be defined as a network of lumped or distributed constant elements (capacitors, inductors, resistors, or their equivalent) that permits signal transmission at some frequencies and impedes it at others. The passband of a filter is the frequency range in which there is little or no attenuation. The stopband is the frequency range in which attenuation is desired.

(1) Classes. Filters are divided into four basic classes based on the relative positions of the passbands and stopbands in the frequency spectrum. The four basic classes of filters are low-pass, high-pass, band-pass, and band-reject. Figure 5-71 shows the attenuation as a function of frequency for each class.

(a) A low-pass filter (fig 5-71A) passes all frequencies below its cutoff frequency (f_c) and, in theory, attenuates all frequencies above the

cutoff frequency. This type of filter is used very often in EMI and HEMP control. Power line filters are low-pass types that pass d.c. or a.c. power frequencies without significant power loss while attenuating signals above these frequencies. Also, low-pass filters are used on control and signal lines for which all undesired frequencies are above the desired signal frequencies.

(b) A high-pass filter (fig 5-71B) passes all frequencies above its cutoff frequency and attenuates all frequencies below the cutoff frequency. High-pass filters are used on lines for which all of the undesired frequencies are lower than the desired signal frequencies. In particular, such filters are used to remove a.c. power line frequencies from signal channels.

(c) A band-pass filter (fig 5-71C) passes all frequencies between a lower cutoff frequency (f_{c1}) and an upper cutoff frequency (f_{c2}). It attenuates all frequencies below f_{c1} and above f_{c2}. This type of filter is used when undesired frequencies are both lower and higher than the desired signal frequencies.

(d) A band-reject filter (fig 5-71D) attenuates all frequencies between a lower cutoff frequency (f_{c1}) and an upper cutoff frequency (f_{c2}). It passes all frequencies below f_{c1} and above f_{c2}. This type of filter is used when the undesired signals are within a restricted frequency range and the desired signal frequencies may be over a wide frequency range both above and below the undesired signal band.

(2) Reactive versus lossy filters. Filters are also classified by the way they attenuate. Reactive, or lossless, filters attenuate unwanted signals by reflecting energy back to the source. Absorptive, or lossy, filters attenuate unwanted signals by changing them into heat in a lossy dielectric or thin layer of resistance material.

(a) Two factors greatly influence the effectiveness of reactive- or reflective-type filters. These factors become very important when the filters are required to exhibit either passband or stopband properties over wide frequency ranges (for example, a low-pass filter that must attenuate frequencies over the range 1 to 100 megahertz). For a reflective filter to have the specified passband and stopband properties, both its input and output terminals must be terminated with the design impedance of the filter. These matched impedances must be satisfied over the whole stopband region as well as the passband region if the specified attenuation is to be realized. When the desired stopband (or passband, in the case of a high-pass or band-reject filter) covers several octaves or decades of frequency range, it is very hard (if not impossible) to maintain the matched impedances, even if they are known. In addition, for applications such as power line filtering, the source, or input, impedance is probably unknown and may vary drastically with frequency. Under these conditions, the filter's performance will likely differ from design specifications. A second factor to consider with reflective filters is that they will have spurious resonances that will

degrade the stopband or passband properties when the bands extend over frequency ranges of several octaves. The spurious resonances result from the stray, or parasitic, reactance associated with lumped elements filters and from the natural periodicity in transmission line filters.

(b) The drawbacks of reflective filters led to the design of lossy, or dissipative, filters that take advantage of the loss-versus-frequency properties of materials such as ferrite compounds and carbonyl iron mixes. These materials are unique, with low d.c. attenuation and good high-frequency attenuation over broad, continuous frequency ranges. Lossy filter attenuation is directly proportional to the distance the signal travels through the lossy material and is specified in terms of decibels per megahertz per unit length. An important feature of dissipative filters is that they do not have spurious passbands in the stopband region. Also, since the undesired energy is absorbed in the filter's lossy fabric, an impedance mismatch at filter input/output terminals has no major effect on attenuation. The filter becomes lossy in the frequency range at which either electric or magnetic losses, or both, become large and increase rapidly with frequency. Dissipative filters of this type must be low-pass. A major use is general-purpose power line filtering.

(c) When more rapid attenuation slopes are required, a hybrid dissipative-reflective filter can be used. With proper design, the reflective filter's sharp cutoff properties can be realized. At the same time, the filter's dissipative features will remove spurious passbands in the stopband region and reduce the impedance matching requirements.

(d) Ferrite materials often are used for dissipative filters. These materials can be molded like ceramic into tubular shapes (beads) that can be slid over wires or used for choke cores. The equivalent circuit for a ferrite bead is an inductor and resistor, as figure 5-72 shows. The advantages of ferrite beads are that they are available in a wide variety of shapes and sizes, are low-cost, and are dissipative rather than reflective. Drawbacks are that they are restricted to low-pass filter designs, are useful only in low-impedance circuits (less than a few hundred ohms), and saturate at fairly low current levels (saturation can occur in certain types for currents as low as 10 milliamperes). Ferrite beads suppress frequencies above 1 megahertz, whereas ferrite chokes may be used at frequencies as low as 20 kilohertz with special design. Ferrite beads have been used on mechanical penetrations (cables) for aircraft controls since the cable cannot be bonded to an enclosure. Additional uses would be on otherwise unprotected, internal (inside the enclosure) signal or control wires.

(e) Still another concept of lossy filtering is the filter-pin connector. In this device, the filter is built into the cable-pin assembly (figure 5-73). Each filter-pin is configured as a connector by lossy material (such as ferrite) surrounding the pin, with shunt capacitors between the pin and the connector shell. Filter-pins have been reduced to such small size that filter-pin connectors are now available with as many as 128 pins.

However, because of the limited shunt capacitance and series inductance that can be built into the pin, filters of this small type offer little attenuation below about 1 megahertz. In a 50-ohm system, the typical attenuation offered by filter-pins is about 20 decibels at 10 megahertz, up to 30 decibels at 100 megahertz.

(3) Filter uses. In the design of a shielded enclosure that is to protect circuits from a HEMP environment, any wire or cable that will be exposed to this environment and that penetrates the shielded enclosure must be filtered to prevent coupling of HEMP into the facility along conductive paths. Filters are the primary form of protection. In addition, filters may be needed in interconnected wiring designs to prevent HEMP signal conduction to circuits inside the enclosure. To prevent the voltage/current limits of a filter from being exceeded, transient suppressors may be required in front of the filter. Spark gaps often are used to protect power lines, but they generally have rather slow response times. In this case, the fast-rising leading edge of the HEMP pulse can couple past the spark gap. For this reason, filters (or fast-response transient suppressors such as MOVs) may be used along with the spark gaps. Fast-response transient suppressors rather than filters may be required, depending on the level of the residual peak-voltage spike. For example, suppose a spark gap is used to protect a 440-volt a.c. power line from HEMP-induced transients and a filter is first contemplated to follow the spark gap. It is reasonable to expect a 12-kilovolt residual peak voltage spike after the spark gap due to the spark gap's slow firing poperties. At this voltage level, filters may be susceptible to arcing or damage or they may be very expensive to design to withstand such voltages. Therefore, a high-speed transient suppressor, such as an MOV, should be specified in addition to a filter.

(4) Filter installation and mounting. To achieve the desired results with filters, it is necessary to adhere to certain guidelines when installing and mounting them. The RF impedance between the filter case and ground must be made as low as possible. Otherwise, the filter insertion loss may be seriously degraded at the higher frequencies. The preferred contact between the filter case and ground is made by a metal-to-metal bond between the filter case and the shielded enclosure wall, entry vault, or equipment chasis. In addition, effective isolation is mandatory between the filter's input and output wiring to prevent radiation from the input wiring to the output wiring from circumventing or degrading the filter's performance. This isolation can be achieved in either of two ways. The most common approach is to use a bulkhead-mounted feedthrough type of filter in which an effective RF bond is established between the shield and the filter case at the circumference around the feedthrough flange. In this type of filter, the inout and output wiring are isolated internally. The second approach requires the use of a shielded filter enclosure that can contain one or more filter modules. A bulkhead is included in the enclosure to isolate the input and outpit wiring and the filter modules are mounted to the bulkhead using appropriate gasketing.

(5) Specifying filters. In selecting a filter for a particular use, many parameters must be taken into account to insure effectiveness. The attenuation versus frequency characteristic is the main factor that determines a filter's suitability for a particular use. However, other electrical and mechanical requirements must be specified, as described in paragraphs (a) through (h) below.

(a) Impedance matching. The input and output impedances must be specified to match the impedance of the line into which the filter will be inserted. Impedance matching is especially critical for transmission lines, so that the filter does not impair the normal operation of the equipment on both ends of the line. In addition, care must be taken that the filters to be used do not degrade the desired performance of circuits in the system. This includes prevention of waveform distortion and proper impedance matching to prevent line rejections.

(b) Voltage rating. The voltage rating of the filters must be specified to insure that each filter is correct for its particular use. The filter voltage ratings must be high enough for reliable operation under the extreme conditions expected. However, specifying a rating higher than required will bring penalties in size, weight, and cost.

(c) Current rating. The filter's current rating should be specified for maximum allowable continuous operation of the circuit in which it is installed. It should agree with the current rating for the wire, components, circuit breakers, and fuses with which it will be used.

(d) Voltage drop. The maximum allowable voltage drop through the filter should be specified. With the maximum current specified, the voltage drop requirement specifies the maximum passband insertion loss of the filter.

(e) Frequency. The relative frequencies and magnitudes of the desired and undesired signals must be considered when specifying filter frequency properties. In general, the size, weight, and cost of a filter rise rapidly as the attenuation slope increases.

(f) Environment. Filters must be able to withstand the environmental operating ranges of the equipment in which they are used. The specified temperature range for the filters must include both the extreme low and the extreme high temperatures in which the equipment will have to operate.

(g) Size and weight. In most cases, size and weight will be important considerations in choosing filters. Filter manufacturers are fairly flexible in being able to provide a wide choice in the filter case shape, method of mounting, and types of terminals and connectors.

(h) Load balancing. A common practice in powerline filter installation is to place two or more filters in parallel to enable standard filters to meet current handling and voltage drop specifications. If this is

done, and if one of a parallel bank of filters fails to an open-circuited condition, then the current that had been handled by the failed filter will be added to the load of the other filters in the parallel bank. This additional load may be enough to cause the other parallel filters to fail as well. It is thus important that filters be designed such that the most likely failure model is a short-circuit to ground, which will cause the protective circuit breaker for that circuit to open before damage occurs to parallel filters.

c. Common mode rejection (CMR). CMR devices are used to attenuate common-mode signals in differential-mode systems. CMR refers to a device's ability to attenuate common-mode signals and to prevent conversion of these signals to differential-mode signals at the input leads. For example, if a device has a CMR ratio of 60 decibels, a 1-volt common-mode signal looks like a 0.001-volt differential-mode signal at the device output.

(1) Balanced cables. Common-mode signals that couple to cables outside the facility can be converted to differential-mode signals at the equipment level if balanced cables are not maintained or if shields are not fully intact on signal, control, and antenna inputs. This mode conversion can also occur if transient suppressors and filters used to protect balanced lines are not designed and installed properly. For a.c. power, the facility transformer should be configured delta-wye to increase CMR.

(2) Improving CMR. To improve CMR, balanced lines, baluns, and isolation techniques should be used wherever possible to protect signal, control, and antenna cables. When transient suppression is required on a balanced line, the suppression devices must have the same breakdown characteristics and breakdown times to prevent the common-mode signal from appearing as a differential-mode signal at the balanced input. Transient suppressors rarely have well controlled firing properties. Therefore, spark gaps with a three-element common chamber spark gap are used because if one gap fires, the other is forced to fire simultaneously. With SASs and MOVs, the devices should be packaged together and must have simsimilar breakdown characteristics. Special engineering designs may be required to achieve satisfactory results.

(3) Examples of balanced cable designs. Figure 5-74 gives examples of balanced cable designs to achieve high CMR ratios. Figure 5-74 shows both a shunt-connected balanced transformer arrangement using a twisted-pair cable and a series-connected transformer circuit using twisted pairs. The shunt-connected transformer circuit has the advantage of providing ground isolation, if the center taps are left floating--a feature not present in series-wound configurations. For a typical circuit using a series transformer with an ideal ground, no common-mode signal appears at the output. In actual operation, none of these ideal conditions occur and some common-mode signal conversion takes place. Another example of CMR is the use of a delta-wye power transformer.

d. Isolation. Isolation techniques involve breaking or opening the transient signal path to prevent the transfer of unwanted signal energy. These techniques include fiber optics, dielectric separators in metallic conductors such as sewer and water pipes, dielectric drive shafts, electro-optic isolators, and isolation transformers. Other isolation techniques involve physical separation, routing, and reconfiguration to prevent mutual coupling between cables. Physical isolation methods also involve grouping electrical cables according to function, such as a.c. power, d.c. power, signal, and control and antenna lead-ins, and then shielding functional classes from each other.

(1) Fiber optic cables. Fiber optic cables do not radiate or couple EM energy the same way metallic cables do and are therefore regarded as solving EMP-related problems rather than causing them. However, HEMP problems can occur when using fiber optics. Potential problems include susceptibility of the transmitter/receiver circuitry and violation of zonal barriers if the fiber cable is not installed or specified properly. To eliminate coupling to EM fields, the fiber optic cables must have no associated metal support wires or physical protection shields. Any internal support member should be specified to be made of Kevlar or some other type of dielectric material, such as polyvinyl chloride or nylon.

(2) Waveguides for fiber cables. Fiber or fiber cable penetration through a shield requires a small metal tube used as a waveguide beyond cutoff. The fiber cable cannot have metallic components that penetrate the shield. In determining the attenuation and required length of the waveguide, the fiber material must be considered. The waveguide must be analyzed as dielectrically loaded which changes its cutoff and attenuation characteristics.

(3) Electro-optic isolators. Isolation transformers were discussed in the previous section on the use of transformers to improve CMR. Electro-optic isolators are semiconductor devices that incorporate an LED and detector in the same package. Isolation is achieved by converting the electrical input to an optical signal and back to an electrical output. Electro-optic isolators are digital devices with lights either on or off and are rather slow. Since these isolators are actually semiconductors, they are susceptible to high-power transients.

(4) Microwave isolation technique. Another possible isolation technique is to use a microwave system for communication between protected areas. Since the frequency passband required is beyond the HEMP frequency range, and waveguides can penetrate shields without compromising them, the microwave system can give complete isolation. The waveguide must be bonded to the shield enclosure at the point of entry.

5-14. Apertures.

a. Shielding. Various types of nonconductive apertures must exist within a shielded enclosure for entrances (doors), ventilation, and utilities. The HEMP protection for these apertures includes special shielding techniques, WBC ports, or a combination of these techniques.

(1) Doors/personnel entry.

(a) Personnel and cargo entrances are protected by RFI shielded doors. Fingerstock is usually advised. Pneumatic pressure seal sliding doors can be used for large or seldom opened entrances. The doors should be specified with a decibel rating slightly higher than that of the facility shield since they tend to degrade.

(b) Door closure designs must also provide good electrical continuity between the door and frame. Figure 5-75 shows typical designs that maintain electrical continuity with two rows of electrical fingerstock; magnetic continuity is maintained with a steel coverplate that makes good contact with the door surface and adjacent wall shield (ref 5-7). The fingerstock is made of spring material with high conductivity, such as beryllium copper or phosphor bronze, to make tight contact with the door frame. The fingerstock generally mates with a brass or copper plate to ensure electrical contact. More sophisticated doors are the sliding type with pneumatic closers that provide pressure at the mating surfaces (usually knurled) to better assure electrical contact between the door and frame.

(c) A carefully made door closure in good condition can attenuate EMP signals as much as 100 to 120 decibels. However, wear of the parts and loss of contact due to metal fatigue, dirt, grease, or paint can seriously degrade the attenuation. Therefore, regular monitoring, cleaning, and maintenance (replacement) are needed. The choice of door design depends on the overall shielding requirements, cost, and operational surveillance and maintenance requirements. For low SE requirements (less than 50 decibels), a single row of fingerstock is required. Higher performance (60 to 120 decibels) can be obtained using double rows of fingerstock. Sliding doors that have pneumatic closures and knurled surfaces can achieve up to 120 decibels. Fingerstock type doors, although designed to provide a wiping action when the door is opened or closed, still require monthly cleaning and maintenance. The fingerstock also is susceptible to damage if not protected as in figure 5-75. Fingerstock ages (work-hardens) and in time will require replacement. The sliding doors achieve higher initial attenuation but due to their sophistication, tend to have high breakdown rates and long down-times. Further, sliding doors are expensive and require an air supply system. In general, they are not recommended for high-use areas, but are very effective for large doors that are not used often.

(d) When both doors are closed, the overall SE of the facility entryway can be much higher than that obtainable with a single door. Conversely, the SE of each door could be relaxed and still maintain the desired shielding level. This design can reduce the monitoring and

maintenance functions since some degradation could be tolerated. In addition, a vestibule can provide a weather-resistant entryway; that is, the shielded inner door would not be exposed to the weather, and again, maintenance (cleaning) requirements would be reduced. Another reason for using a vestibule is if the ambient EM environment is always present (for example, nearby radar or communications sites) and maximum protection must be maintained due to a high level of mission criticality. In this case, both doors must be able to provide the required SE. Further, the doors should be interlocked so that only one door can be opened at any time.

(e) In some facilities, waveguide tunnels are installed to achieve the required SE without shielded doors. A waveguide tunnel is a metal extension of the enclosure. This approach has been used in some buried facilities where the high-frequency EM environment is attenuated by the earth overburden. Entryways formed in this way use waveguides-below-cutoff. For large openings, such as personnel access doors, this requires the EM environment be reduced to a few megacycles; the actual frequency depends on the door size required and the length of the waveguide since the waveguide attenuation is a function of size and the amount the interfering frequency is below the waveguide cutoff frequency. The advantage of this approach is that tunnels are maintenance-free (they do not degrade with time). Care must be taken that no conductor of any type (mechanical penetrants or electrical penetrants) is ever allowed to enter the facility via these tunnels. Adding a conductor to the tunnel transforms the waveguide into a propagating structure--that is, a coaxial structure that has no cutoff frequency.

(2) Other access ports. Occasionally, facilities may have access ports not normally used and therefore only opened occasionally. Figure 5-76 shows an emergency escape hatch for a buried facility that uses a bolted hatch with gaskets. Most mesh gasketing material, if compressed more than a few times or for long periods, deteriorates beyond use and must be replaced.

(3) Air ducts. Air ducts for ventilation must be treated with WBC techniques. Both wire screens and honeycomb are used for this purpose. Figures 5-77 and 5-78 show typical methods of installing screens over a ventilation aperture. Honeycomb shielding of an air vent is shown in figure 5-79. As already discussed, honeycomb is preferred over wire screen since it can be designed to provide much better shielding with less resistance to air flow.

b. Waveguide-below-cutoff (WBC).

(1) Tunnels. Openings in a shield can be treated by forming them into a metal-lined tunnel that acts as a WBC, where the cutoff frequency is defined by the opening dimensions as given in equations 5-23 and 5-24 (para 5-6). The attenuation provided by a rectangular WBC opening also is given by equation 5-23. Figure 5-80 shows the attenuation that can be achieved for tunnels of various depths and wall dimensions.

(2) Tunnels and grills. Combinations of WBC tunnels and grills can be used to decrease HEMP coupling through air vents, as figure 5-81 shows. The duct is continuous metal, welded and bonded to the facility shield. This method should be considered only when honeycomb cannot be used as in some diesel exhaust systems where soot could collect.

5-15. Utility penetrations.

a. Overview. At the facility level, nonconductive utility penetrations generally include water and sewage pipes, fuel lines, and air-conditioning lines. Depending on the facility configuration, such lines could also penetrate internal enclosures. Utility penetrations must be treated properly to maintain the facility's shielding integrity.

b. Conductive penetrations. Figure 5-82 and the upper part of figure 5-83 show the treatment of a metallic pipe or waveguide that penetrates a shield. Note that the pipe or waveguide circumference is bonded to the shield to maintain closure. All currents on the pipe will thus be diverted onto the shield exterior (or to earth). These penetrants should enter the facility through an entry vault area to maximize the protection provided.

c. Nonconductive penetrations. For nonmetallic pipes, such as water or sewage lines made of plastic, or for cast iron pipes that cannot be bonded easily, electromagnetic closure of the hole in the shield where the pipe must penetrate is not feasible. However, the shield will be isolated for HEMP currents induced on a water or sewage system since the penetrating pipe is nonconducting. To maintain shield integrity, a metallic sleeve must surround the nonconductive pipe to form a WBC protection device (figure 5-84). The sleeve must be welded to the shield around the sleeve circumference. Metal pipes also must be welded to the shield around their circumference and must form WBC entry points. Both types of WBC must conform with maximum allowable diameters as defined earlier.

(1) Pipes carrying fluids. Often it is necessary to penetrate shields with pipes carrying fluids such as water, sewage, refrigerants, fuels, and other chemicals. Since the electrical parameters of the fluids are much different from those of air, the cutoff frequency and attenuation in a waveguide-beyond-cutoff must be determined for the specific fluids.

(2) Impact of fluids on waveguidews. One study has assessed the impact of fluids on waveguide performance (ref 5-20). Figures 5-85 and 5-86 show variations in attenuation and cutoff frequency. Figure 5-85 shows the attenuations for loss tangents varying from 0.0 to 0.5 in 0.05 increments; figure 5-86 shows families of curves for the cutoff frequencies of pipe inside diameters 2.54 centimeters (top curve), 3.81 centimeters, 5.08 centimeters, 6.35 centimeters, 10.16 centimeters, and 15.24 centimeters.

5-16. Bonding.

a. Purpose. Bonding is the process by which two or more conductive materials are joined together to achieve and maintain a low-impedance electrical path. In the design, implementation, and maintenance of EMP-shielded facilities, bonding is one of the most important considerations. In general, many joints in the electrical conductors and supporting structures will exist in every installation. These joints must be joined properly such that, ideally, each bond has both the mechanical and electrical properties of the conductors on either side of the joint, not only when formed, but independent of time.

(1) Potential differences. Adequate bonds are necessary to prevent the development of potential differences that may be important sources of HEMP coupling. Good bonds provide electrical homogeneity to shielded enclosures and minimize potential differences between conductive equipment frames, enclosures, and cables.

(2) External fields. Bonding also is required for protecting electronic equipment and circuitry from external fields. Good bonds are essential to proper performance of EM shields and filters. For example, consider a typical power line filter like the one shown in figure 5-87. If the return side of the filter (usually the housing or case) is not well bonded to the reference plane (typically the power entrance vault), the bond impedance, Z_B, may be high enough to impair the filter's performance. The filter shown is a low-pass filter-- the type that can be used to remove HEMP from equipment power lines. The filter works partly because the reactance of the shunt capacitors, X_C, is low over most of the HEMP spectrum. HEMP spectral components present on the a.c. line are shunted to ground along path 1 and thus do not reach the load. If Z_B is high relative to X_C, however, HEMP energy follows path 2 to the load, and the filter's effectiveness is compromised.

(3) Equipotential surfaces. Shielded enclosures should be bonded to provide a seam conductivity nearly equal to the shield material conductivity and the mechanical strength required at every seam and discontinuity. Cable shields must be bonded to the enclosure with maximum practical conducting area. All equipment should be bonded to the ground plane through the lowest possible impedance and the ground bus system must be bonded together well enough to insure that the reference plane is as homogeneous and near to an equipotential surface as possible.

b. Techniques. Bonding techniques are generally classified as direct or indirect. Direct bonding is always preferred; however, it can be used only when the two members can remain joined, either permanently or semipermanently. When joints, seams, hinges, or other discontinuities must be bridged, indirect bonding with bonding jumpers is necessary. Indirect bonding is at best only a substitute for direct bonding and should be used only when no other option exists for a HEMP-protected facility.

(1) Direct bonding. Direct bonding is achieved by maintaining bare metal-to-metal contact between two surfaces with a high, uniform pressure or through metal flow processes. Properly constructed direct bonds have a low d.c. resistance and an RF impedance as low as the conductor configuration will permit. Permanent joints can be bonded directly by welding, including conventional gas, MIG, electric, and exothermic weld techniques. MIG welding is preferred for joining seams in enclosures constructed of steel. Conventional welding (gas or electric) can be used for bonding cable trays. Seams in aluminum enclosures must be bonded by heliarc welding. Copper or brass enclosures can be bonded by soldering or brazing techniques.

(a) Exothermic (Cadweld) welding is a good way to join rebar and to bond conductors of the earth electrode system. In this process, a mixture of aluminum, copper oxide, and other powders is held in place with a mold around the conductor joint. The mixture is then ignited, and the heat generated melts the conductors to form an uninterrupted path between the two. This process is particularly advantageous for bonding copper cables to steel I-beams when corrosion prevention in steel may be difficult, and for bonding counterpoise cables to ground electrodes when future access to the bonds for maintenance would be impossible or impractical.

(b) Soldered bonds should not be used to bond joints subject to carrying high currents as in fault clearance and lightning discharge paths where physical strength is required. A soldered connection produces a higher bond resistance than does a metal flow process. Cold solder joints are an ever-present possibility. The main objection to soldered joints is that, under heavy currents, the bond may heat, melting the solder with subsequent bond failure and loss of protection. Other drawbacks are that mechanical strength of the soldered connection is much less than that of the conductors and the bond may fail when conductors flex or vibrate.

(c) Joints that must be disconnected at times for maintenance or other purposes are most commonly made with lock-threaded devices (such as bolts) or clamped fittings (such as conduit clamps). To achieve a low-resistance joint with either bolted or clamped bonds, the conductor's mating surfaces must be cleaned thoroughly, with all rust and corrosion, paint, anodizing, and protective finishes removed. Bond surfaces should be sanded bright and the final sanding should be done with a very fine grit paper. Completed surfaces should be joined soon after sanding to prevent reformation of oxide films and to limit moisture and dust collection. All bolts and other fasteners should be tightened enough for close mating over a wide range of temperatures and vibrations. Figures 5-88 through 5-92 show the required surface preparation for various types of bolted bonds.

(d) Clamped fittings are frequently used to bond wires or straps to small pipes and other cylindrical objects. Cleaning procedures similar to those used for bolted connections should be used before making a clamped fitting, as figure 5-92 shows. On curved surfaces, a toothed washer often

must be used under the clamp jaws to insure that the bond will hold and will continue to hold under temperature and vibration stresses.

(e) The main disadvantage of clamped and bolted connections is that they are much more susceptible to corrosion than are permanent bonds. With both types of semipermanent bonds, it is recommended that the cleaned surface be coated with a protective, conductive surface treatment. Examples of this type of treatment are irridite or alodine for aluminum and tin for steel using a brush-plating method. Whether or not a conductive surface treatment is applied (but especially if it is not), exposed edges around the bonded joint should be coated with an effective moisture barrier to prevent corrosion. Periodic maintenance is required to insure bonding integrity. As part of this maintenance, bonds should be checked for signs of corrosion, looseness, or other deterioration.

(2) Indirect bonding. Indirect metal bonding requires a bonding jumper. These bonds are commonly used in facility areas where bonded members must be able to move, such as at access doors to test chambers, network distribution boxes, and circuit monitoring panels. Indirect bonds are formed with flexible metal straps or conductors and often can disconnect quickly for easy removal. Bond quality is inferior to that provided by the direct bond, and the maintenance problem is much more severe. Being subject to motion and vibration, indirect bonds frequently fail with time because of metal fatigue or corrosion. Therefore, special effort should be made in the maintenance program to check and replace bonding staps as soon as these begin to deteriorate.

(a) For d.c. or low-frequency a.c., equipment is easily bonded with jumpers. A wide metal strip or flat copper braid is adequate. However, jumpers must be used with care when bonds are to provide a path for RF currents. There is almost no correlation between the d.c. resistance and the RF impedance characteristics of bonding jumpers (ref 5-21). At very low frequencies, bonding jumper impedance is primarily a function of the conductor size and the quality of metal-to-metal contact (refs 5-22 and 5-23). The conductor's geometrical configuration and the physical relationship between the equipment and the reference plane introduce reactive components into the impedance characteristics of the bonding path. A certain amount of stray capacitance is inherently present between the bonding jumper and the objects being bonded and between the bonded objects themselves. Figure 5-93 shows an equivalent circuit for the bonding stap alone. R_S represents the strap a.c. resistance, L_S is the inductance, and C_S is the stray capacitance between the jumper and the two members being bonded. Except for extremely short straps, the magnitude of the strap's inductive reactance will be significantly larger than the resistance and, at frequencies above approximately 100 kilohertz, the R_S term can be ignored. Thus, not considering R_S, the equation for the impedance, Z_S, of the quivalent circuit is--

$$Z_s = \frac{wL_s}{1 - w^2 L_s C_s} \qquad \text{(eq 5-35)}$$

For a flat, solid strap, at frequencies where the skin depth is well developed and the bond strap thickness is greater than three skin depths, the effective resistance and inductance are given approximately by--

$$R_s = \frac{p}{Dw} \text{ ohms/meter length} \qquad \text{(eq 5-36)}$$

$$L_s = \frac{p}{wDd} \text{ henrys/meter length} \qquad \text{(eq 5-37)}$$

where D is the strap width; d is the skin depth (= $[p/(pi)fu]^{0.5}$); p is material resistivity; and u is material permeability. C_s is approximated by--

$$C_s = \frac{eA}{d} \qquad \text{(eq 5-38)}$$

where A is the common area; d is the distance between equipment and ground plane; and e is the permittivity of the media. The equivalent circuit of figure 5-93 does not account for the effects of the equipment enclosure or other object being bonded. Figure 5-94 shows the true equivalent circuit of an indirectly bonded system. The bonding strap parameters are again represented by R_s, C_s, and L_s.

(b) The inherent inductance of a bonded object, such as an equipment rack or cabinet, is represented by L_c, and the capacitance between the bonded members, that is, between the equipment and its reference plane, is represented by C_c. In most situations, $L_s \gg L_c$, $C_c \gg C_s$, and R_s can again be ignored. Thus, the primary (lowest) resonant frequency is given by--

$$f_r = \frac{1}{2(pi)\ (L_s C_s)^{0.5}} \qquad \text{(eq 5-39)}$$

These resonances can occur at surprisingly low frequencies-- as low as 10 to 15 megahertz in typical configurations. Near these resonances, bonding path impedances of several hundred ohms are common. Such high impedances make the strap ineffective. In fact, in these high-impedance regions, the bonded system may act as an effective antenna, increasing pickup of the same signals that the bond straps are intended to reduce (ref 5-21). Bonding straps should therefore be designed and used with care, making special efforts to ensure that unexpected coupling does not occur from using such straps.

c. Bond protection. Both directly and indirectly bonded joints that are held together mechanically deteriorate with time. Corrosion develops increasing contact resistance markedly when oxidation products are deposited

at the point of contact. These oxidation products can form electrical diodes that behave as nonlinear elements. Hence, a corroded joint can be a source of harmonics and mix products of the signal currents flowing through the junction (ref 5-6).

(1) Source of corrosion. Corrosion can result from electrolytic or galvanic action or a combination of the two. Galvanic corrosion is a function of moisture content in the ambient environment. With enough moisture, the two contact surfaces form a chemical wet-cell battery. Each surface behaves like an electrode immersed in a conducting solution. Positively and negatively charged ions leave the surfaces and pass into the solution. If the two surfaces are of the same material, the ion transfer is small and the net surface change is small. If the metals differ chemically, one will erode because of the rapid transfer of ions into solution.

(2) Galvanic series. Table 5-25 shows the relative placement of common materials in the galvanic series. A particular metal will lose positive ions to the metals below it in the series. The metal higher in the series is eroded in the process. The farther apart the metals are in the series, the more rapid is the corrosion. Thus, if dissimilar metals must be joined, the most easily replaceable part of the bond should be made of the metal higher in the series. A common practice is to insert a sacrificial washer between the two main conductors. This washer is made of a material falling at an intermediate point in the galvanic series. The washer is replaced periodically as it deteriorates.

(3) Electrolysis. Bond corrosion can also be caused by electrolytic action. If d.c. flows between two metals through a conducting solution, the metals will tend to ionize into the solution. With common battery systems, electrolysis can cause serious bond corrosion.

(4) Effect of moisture. Moisture is needed to form the electrolytic solution in the joint and hence is the greatest single cause of corrosion. Some moisture is present in almost every environment; therefore, no installation is completely immune to corrosion. For example, dust attracts and holds moisture on surfaces. Organisms such as mold, fungi, and bacteria may inhabit the moisture, producing acids that destroy protective metal coatings, or they may actually initiate corrosion by causing potential differences between the bond members (ref 5-24). Salt sprays and other corrosive atmospheres have long been recognized as detrimental to bonded junctions. Air pollutants are an increasing problem because many form corrosive acids in the presence of water. Salts and acids cause the formation of high-resistance compounds in the joint in addition to eroding the bonding member metal.

(5) Summary. Bond corrosion can create many problems if it is not controlled. Ideally, both bond members should be of the same material. If dissimilar metals must be bonded, they must be as close together in the galvanic series as possible. All bonded joints must be perfectly clean,

tight, and dry when formed, and a proper protective coating must be applied after the bond is formed. The protective coating must completely seal the joint to prevent moisture from entering the bond. Figure 5-95 shows preferred practices for protecting bonds.

5-17. Grounding.

a. Concepts. Grounding is the electrical attachment of equipment and buildings to earth or to other metal objects in an area already in electrical contact with earth. For electrically powered equipment, the purpose of this contact with earth or grounded objects is to establish a low-impedance path back to the power source--the transformer, generator, or battery--to permit rapid clearance of faults for reduced hazards of fire and electric shock. By establishing a low-impedance path between exposed metal parts of electrically powered equipment and grounded metal objects subject to human contact, the threat of exposure to hazardous voltages in the event of a fault is reduced greatly.

(1) Lightning protection. Buildings and equipment exposed to lightning should be grounded to provide a preferential path to earth for lightning stroke currents and to prevent hazardous voltages from developing between metal objects by the high-amplitude, fast-risetime waveforms produced by stroke currents.

(2) Grounding buildings. Protection against electrical fault and lightning are the primary purposes of grounding. Any building provided with electrical power must be grounded properly in accordance with National Electric Code principles (ref 5-25). A dedicated lightning protection network may be required, depending on the type of facility and the degree of lightning exposure (ref 5-6).

(3) Interfacing electronic equipment. Electronic equipment for instrumentation, communication, data processing, surveillance, and other functions must interface properly to the safety and lightning protection grounding networks without suffering unacceptable degradation in performance. To achieve noise- and interference-free electronic equipment performance without violating safety and lightning protection principles, the electrical ground network, lightning protection network, and electronic grounding system must be designed properly and installed and maintained carefully. Correct bonding techniques must be used and the grounding system must not violate the integrity of any electromagnetic shield.

(4) Grounding system as electrical circuit. As a network of conductors, the grounding system has resistance, inductance, and capacitance properties. In other words, the grounding system behaves as an electrical circuit. Voltage drops can occur because of stray or return currents in the system. The system also may act as an antenna to radiate EM energy into the environment or may have voltages and currents induced onto it from incident EM environmental signals. For example, a HEMP can induce very large currents and

voltages onto the ground network "antenna." These ground network currents and voltages pose a serious threat of damage to electronic components unless specific steps are taken to minimize HEMP coupling to the grounding system.

b. Techniques.

(1) Zonal boundaries. In an integrated approach to internal facility grounding based on the zonal concept, simplicity and uniformity of application are achieved by requiring each zonal boundary to be treated the same regardless of the shield quality. To limit damaging potentials in a given zone, all metal parts in the zone, including the outer surface of the next higher order zonal boundary, must be grounded to the zonal boundary's inner surface with a single ground conductor (fig 5-96). If low-frequency magnetic field penetration is a major problem, a single-point grounding system interior to a zone is a potential solution. If good SE is obtained across the entire HEMP spectrum, the type of grounding connection used becomes less important. The single-point ground concept is practical for low-frequency systems in which the ground lead inductance does not introduce a significant ground impedance. For high-frequency systems using the ground connection as a reference, a single-point ground's extended conductors would introduce too high an impedance at the system's operating frequency to be used as a reference. Therefore, practical grounding usually is a combination of single-point (low-frequency systems) and multipoint (high-frequency systems) approaches. The multipoint approach includes equipotential planes which are required by MID-STD-188-124 (ref 5-26). Ground wires must not penetrate zonal boundaries to ensure that SE is not compromised. If local codes require ground wires to penetrate boundaries, they must be treated like any other penetration with limiters, filters, or other protective measures.

(2) Soil as a dissipative medium. Conductors outside the facility, such as power lines, signal lines, and utilities, pose a particular challenge. Consider the typical facility containing sensitive electronic elements such as centers for communications, message switching, and computers. When supplied with utilities such as water, fuel, sewage lines, and electricity, and with external communications links such as telephones and data lines, and when protected against lightning with a proper protection system (including its earth electrode system), a complex array of potential HEMP collectors exists in Zone 0. These Zone 0 collectors act as an antenna to intercept HEMP and produce potentially damaging voltages and currents at facility penetrations. To minimize the level of threat in the facility, the voltages and currents appearing at entrance points must be reduced to levels that are equal to or less than those expected to couple through zonal barriers, or below the damage thresholds of critical equipment inside the facility. Soil, a lossy

---

*The net threat appearing at any particular equipment port is the vector combination of effects arising from the penetrating HEMP field, the conducted voltages and currents resulting from induced currents on external collectors, and the secondary EM fields produced by the induced collector currents. The

dielectric, may help dissipate much of the EMP energy induced on external collectors. To make effective use of the soil as a dissipative medium, however, the conductor's penetration point through the Zone 0/1 barrier must be controlled carefully. In addition, an earth electrode system must be installed that offers the necessary high-frequency performance needed for HEMP grounding.

(3) Alternate grounding means. The National Electrical Code in the United States permits electrical safety ground attachment to metal utility pipes, preferably the cold water main. When such connections are neither possible nor reliable (as in the case of plastic water lines, for example), the code specifies "made" electrodes consisting of rods, grids, plates, or other configurations of buried metal. Each has certain advantages and disadvantages, as table 5-26 summarizes. Because of their low-impulse impedance, horizontal wires are the best choice for HEMP grounding. Vertical rods may be added to the horizontal wires to achieve the lower, more stable resistance to earth desirable for power safety grounding.

(4) Ring ground. Lightning protection practices emphasize using buried horizontal bare conductors to encircle the structure (building or tower) and form a "ring" ground. The various potential lightning discharge paths such as intentional downconductors, tower legs, and building columns are attached to this ring ground. A major advantage of such a distributed ground electrode is that it offers a shortened distance for the discharge current to travel before entering the soil since the electrode can be routed to be near the lightning downconductors. Second, the ring ground electrode offers the desired low-impulse impedance contact with earth. An electrode configuration meeting the minimum needs of both electrical safety and lightning protection is shown in figure 5-97 for a rectangular structure and in figure 5-98 for an irregularly shaped structure.

(5) Configuration of collectors. An earth electrode system suitable for HEMP protection should offer the lowest possible impulse impedance to earth (ref 5-27). However, because of the magnitudes of currents that can be induced onto Zone 0 onductors and conducting surfaces, it is not desirable to allow HEMP-related currents to flow through or over a structure to reach the grounding electrode (fig 5-99). Therefore, the external collectors (utilities, power/signal lines) should be configured to enter the shielded area at a controlled point, which should have a very low-impulse impedance earth electrode adjacent to it. Inside the facility, grounding networks must be designed and installed to achieve and maintain the required fault protection, electrical noise reduction, and HEMP pickup protection. Figure 5-96 shows a simplified way to configure grounding networks inside the various zones. Within each zone, the grounding systems for signals and safety should

---

relative contribution of each of these effects has not been clearly established. Intuitively, however, the long external collectors appear to be the major contributor because they typically present a large effective aperture.

perform their intended function without degrading the HEMP protection of the zonal boundaries. Also, the ground systems should minimize HEMP-related voltages and currents "picked up." For example, ground wire length should be minimized so it will be an inefficient monopole antenna, and the area of "ground loops" should be minimized so it will be an inefficient loop antenna. In addition to these basic requirements, the ground systems must interface with the zonal boundaries at the single entry panels. Random, uncontrolled interconnections between conductors can create loops that may serve as efficient HEMP energy collectors. Furthermore, uncontrolled interconnections make it difficult to define zonal boundaries and can make upgrading the shielding of these boundaries complex. For these reasons, a single-point ground configuration should be used within the shielded zones for low-frequency systems. If a multipoint ground configuration is required by a particular system within a zone, such as a computer or a high-frequency system, then a hybrid ground configuration is permitted. This configuration is one in which a multipoint ground network is grounded at a single point to the zonal boundary interior (fig 5-100).

(6) Single-point grounding. Figure 5-101 shows two acceptable configurations for single-point ground systems. The single lines between each component in these configurations represent all connections (power, signal, ground) between the components. The lines, for example, can represent ducts or raceways that hold all conductors passing between components. All signal and power cables should be protected with shields, conduit, or closed ducts. Care must be taken to ensure that loops are not formed by the duct or cable tray system.

5-18. Cited references.

5-1. Schelkunoff, S. A., Electromagnetic Waves (D. Van Nostrand Co., Inc., 1943).

5-2. Everett, W. W., Jr., Topics in Intersystem Electromagnetic Compatibility (Holt, Rinehart, and Winston, Inc., 1972).

5-3. Engineering Design Handbook--Electromagnetic Compatibility, DARCOM-P 706-410 (U.S. Army Materiel Command, March 1977).

5-4. Miletta, Joseph H., et al., Defense Switched Network Design Practices for Protection Against High-Altitude Electromagnetic Pulse, HDL-SR-82-2 (Harry Diamond Laboratories, July 1982).

5-5. EMP Engineering and Design Principles (Bell Telephone Laboratories, 1975).

5-6. Denny, H. W., et al., Ground, Bonding, and Shielding Practices and Procedures for Electronic Equipments and Facilities, Vol I-III-Fundamental Considerations, Report No. FAA-RD-75-215, (Engineering Experiment Station, Georgia Institute of Technology, December 1975).

5-7. EMP Engineering Practices Handbook, NATO File No. 1460-2 (October 1977).

5-8. Cain, B. L., EMI/RFI Gasketing for Tactical Shielded Shelter Door Seam Applications, Draft USAF Report (USACERL, March 1983).

5-9. Corrosion Control and Electrical Conductivity in 3Enclosure Design, ARP1481 (SAE, May 1978).

5-10. Rogers, S. R., et al, Engineering Design Guidelines for Electromagnetic Pulse Hardening of Naval Equipment, Final Report (Electromagnetic Applications, Inc., Denver, CO, under contract no. N60921-80-C-01 for the Naval Surface Weapons Center, 15 July 1981).

5-11. Knowles, E. D., and L. W. Olson, Cable Shielding Effectiveness Testing, Electromagnetic Pulse Protection and Engineering Management Note 14 (Lawrence Livermore Laboratory, 1973).

5-12. Martin, A. R., and S. E. Emert, "Shielding Effectiveness of Long Cables," Proc. 1979 IEEE International Symposium on Electromagnetic Compatibility, 9-11 October 1979, San Diego, CA.

5-13. Vance, E. F., Coupling to Shielded Cables (Wiley-Interscience, 1978).

5-14. Graf, W., J. Hammand, and E. F. Vance, "Relative Importance of Electromagnetic Shield Violations," Proceedings of the Eighth International Aerospace and Ground Conference on Lightning and Static Electricity (FAA, 21-23 June 1983), pp 8-1 through 8-8.

5-15. MIL-C-39012C, General Specification for Radiofrequency Coaxial Connectors (U.S. Department of Defense [DOD]), 11 August 1982).

5-16. Butler, C. M., D. R. Wilton, K. F. Casey, S. K. Chang, F. M. Tesche, and T. K. Liu, "Selected Topics in EMP Interaction," EMP Interaction Notes, Note 339 (AFWL, August 1976).

5-17. Nielsen, P., EMP/EMI Hardening of Electrical Conduit Systems, U.S. Army Construction Engineering Research Laboratory (USACERL) Technical Report M-292/ADA107133 (USACERL, September 1981).

5-18. Leverenz, D. J., R. G. McCormack, and P. H. Nielsen, EMP Shielding Properties of Conduit Systems and Related Hardware, USACERL Technical Report G19/ADA012729 (USACERL, June 1975).

5-19. Croisant, W., P. Nielsen, D. Sieber, and R. McCormack, Development of Conduit Design Analytical Procedures, USACERL Interim Report M-234/ADA056218 (USACERL, June 1978).

5-20. McInerney, M. K., S. Ray, R. G. McCormack, S. Castillo, R. Mittra, and R. Axford, The Effect of Fluids on Waveguide-Below-Cutoff Penetrations as Related to Electromagnetic Shielding Effectiveness, USACERL Draft Technical Report (October 1983).

5-21. Denny, H. W., "Some RF Characteristics of Bonding Systems," IEEE Transactions on Electromagnetic Compatibility, Vol EMC-11, No. 1 (February 1969), pp 15-22.

5-22. Denny, H. W., and W. B. Warren, RF Bonding Impedance Study, RADC-TR-67-106, Contract AF 30(602)-3282 (Engineer Experiment Station, Georgia Institute of Technology, March 1967).

5-23. Evans, Ross W., Metal-to-Metal Bonding for Transfer of Radio Frequency Energy, IN-R-ASTR-64-15 (Astronics Laboratory, Marshall Space Flight Center, 25 June 1964).

5-24. Roessler, G. D, "Corrosion and the EMI/RFI Knitted Wire Mesh Gasket," Frequency Technology Vol 7, No. 3 (March 1969), pp 15-24.

5-25. National Electrical Code, NFPA 70 ANSI C1 (Quincy, MA: National Fire Protection Association).

5-26. MIL-STD-188-124, Grounding, Bonding, and Shielding for Common Long Haul/Tactical Communication Systems, Including Ground-Based Communications-Electronics Facilities and Equipments (DOD, 14 June 1978).

5-27. Denny, H. W., et al., "Supplemental Grounding of Extended EMP Collectors," DNA 5940F, contract DNA 001-80-C-0294 (Defense Nuclear Agency, 31 January 1982).

5-28. EMP Protection for Emergency Operating Centers, TR-61A (Defense Civil Preparedness Agency, Washington, DC, July 1972).

5-29. McCormack, R. G., EMI/RFI Shielding Effectiveness Evaluation of Bolt-Together Shielded Rooms in Long-Term Aging, USACERL TR-M-296/ADA102754 (USACERL, June 1981).

5-30. MIL-HDBK-335, Management and Design Guidance, Electromagnetic Radiation Hardness for Air Launched Ordnance Systems (USAF, 15 January 1981)

5-31. Vance, E. F., Coupling to Cables, DNA Handbook Revision, Chapter H, ADB001204 (Stanford Research Institute).

5-32. Roffman, G. L., Application of Filters for High-Altitude Electromagnetic Pulse Protection, HDL-TM-81-9/ADA100741 (Harry Diamond Laboratories, April 1981).

5-19. Uncited references.

Davenport, W. B., Jr., and W. L. Root, An Introduction to the Theory of Random Signals and Noise (McGraw-Hill Book Company, 1958).

Electromagnetic Compatibility Design Guide for Avionics and Related Ground Support Equipment, NAVAIR AD1115 (U.S. Department of the Navy, Naval Air Systems Command).

EMP Design Guidelines for Naval Ship Systems, NSWC/WOL/TR 75-193 (IITRI, 22 August 1975).

Hart, W. C., and D. F. Higgins, A Guide to the Use of Spark Gaps for Electromagnetic Pulse (EMP) Protection (Joslyn Electronic Systems, 1973).

Henkel, R., and D. Mealey, "Electromagnetic-Compatibility Operational Problems Aboard the Apollo Spacecraft Tracking Ship," 1967 IEEE Electromagnetic Compatibility Symposium Record, IEEE27C80 (July 1967), pp 70-81.

Jarva, W., "Shielding Efficiency Calculation Methods for Screening, Waveguide Ventilation Panels, and Other Perforated Electromagnetic Shields," Proceedings of the Seventh Conference on Radio Interference Reduction and Electromagnetic Compatibility (Armour Research Foundation/IITRI, November 1961).

Jordan, Edward C., Electromagnetic Waves and Radiating Systems (Prentice-Hall, Inc., 1950).

MIL-STD-220A, Method of Insertion-Loss Measurement (DOD, 14 December 1971).

Mukhedkar, D., and F. Dawalibi, "Ground Electrode Resistance Measurements in Non-Uniform Soils," IEEE Transactions on Power Apparatus and Systems, Vol PAS-92 (1973), pp 109-115.

Mukhedkar, D., Y. Gervais, and F. Dawalibi, "Modelling of Potential Distribution Around a Grounding Electrode," IEEE Transactions on Power

Apparatus and Systems, Vol PAS-92, No. 4 (July-August 1973), pp 1455-1459.

Schultz, R. B., et al., "ELF and VLF Shielding Effectiveness of High Permeability Materials," IEEE Transactions on Electromagnetic Compatibility, Vol EMC-10 (March 1968).

Schultz, R. B., et al., "Shielding Theory and Practice," Proceedings of the Ninth Tri-Service Conference on Electromagnetic Compatibility (IITRI, October 1973).

Scott, J. H., "Electrical and Magnetic Properties of Rock and Soil," Technical Letter, Special Project (U.S. Geological Survey, 16 May 1966).

Scott, L. D., and G. S. Smith, "Measurement Techniques for Antennas in Dissipative Media," IEEE Transactions on Antennas and Propagation, Vol AP-21, No. 4 (July 1973), pp 499-507.

Stratton, J. A., Electromagnetic Theory (McGraw-Hill, 1941), pp 573-579.

Transient Voltage Suppression Manual, Third Edition (General Electric Company, 1982).

Vance, Edward F., "Electromagnetic Interference Control,"IEEE Transactions on Electromagnetic Compatibility, Vol EMC-22 (Institute for Electrical and Electronic Engineers, November 1980).

Table 5-1. Coefficients for magnetic field reflection loss*

Coefficient	Units for distance (r)			
	Meters	Millimeters	Inches	Mils
C_1	0.0117	11.7000	0.462	462
C_2	5.350	0.0053	0.136	136

*Source: H. W. Denny, et al., Grounding, Bonding, and Shielding Practices and Procedures for Electronic Equipments and Facilities, Vol I-II, Fundamental Considerations, Report No. FAA-RD-75-215, I (Engineering Experiment Station, Georgia Institute of Technology, December 1975).

Table 5-2. Absorption loss of metals at 150 kilohertz*

Metal	Relative conductivity, g_r	Relative permeability at 150 kHz, μ_r**	Absorption loss at 150 kHz, dB/mil
Silver	1.05	1	1.32
Copper, annealed	1.00	1	1.29
Copper, hard-drawn	0.97	1	1.26
Gold	0.70	1	1.08
Aluminum	0.61	1	1.01
Magnesium	0.38	1	0.79
Zinc	0.29	1	0.70
Brass	0.26	1	0.66
Cadmium	0.23	1	0.62
Nickel	0.20	1	0.58
Phosphor-bronze	0.18	1	0.55
Iron	0.17	1000	16.9
Tin	0.15	1	0.50
Steel, SAW 1045	0.10	1000	12.9
Beryllium	0.10	1	0.41
Lead	0.08	1	0.36
Hypernick	0.06	80,000	88.5***
Monel	0.04	1	0.26
Nu-Metal	0.03	80,000	63.2***
Permalloy	0.03	80,000	63.2***
Stainless steel	0.02	1000	5.7

*Source: Engineering Design Handbook--Electromagnetic Compatibility, DARCOM-P-706-410 (U.S. Army Materiel Command, March 1977).

**The relative permeability of metals changes somewhat with frequency, but becomes decreasingly important at higher frequencies.

***Obtainable only if the incident field does not saturate the metal.

Table 5-3. Absorption loss of solid copper, aluminum, and iron shields at 60 hertz to 10,000 megahertz*

Frequency	Copper		Aluminum		Iron		Absorption loss, db/mil		
	g_r	μ_r	g_r	μ_r	g_r	μ_r **	Copper	Aluminum	Iron
60 Hz	1	1	0.61	1	0.17	1000	0.03	0.02	0.33
1000 Hz	1	1	0.61	1	0.17	1000	0.11	0.08	1.37
10 kHz	1	1	0.61	1	0.17	1000	0.33	0.26	4.35
150 kHz	1	1	0.61	1	0.17	1000	1.29	1.0	16.9
1 MHz	1	1	0.61	1	0.17	700	3.34	2.6	36.3
15 MHz	1	1	0.61	1	0.17	400	12.9	10.0	106.0
100 MHz	1	1	0.61	1	0.17	100	33.4	26.0	137.0
1500 MHz	1	1	0.61	1	0.17	10	129.0	100.0	168.0
10,000 MHz	1	1	0.61	1	0.17	1	334.0	260.0	137.0

*Source: Engineering Design Handbook--Electromagnetic Compatibility, DARCOM-P 706-410 (U.S. Army Materiel Command, March 1977).

**Other values of μ for iron are: 3 megahertz, 600; 10 megahertz, 508; 1000 megahertz, 50.

Table 5-4. Reflection loss*

	Electric field, db**			Magnetic field, dB**			Plane wave, dB***,+		
Frequency	Copper	Aluminum	Iron	Copper	Aluminum	Iron	Copper	Aluminum	Iron
60 Hz	279	--	241	22	--	-1	150	148	113
1000 Hz	242	--	204	34	--	10	138	136	100
10 kHz	212	--	174	44	--	8	128	126	90
150 kHz	177	175	--	56	54	19	117	114	79
1 MHz	152	150	116	64	62	28	108	106	72
15 MHz	117	115	83	76	74	42	96	94	63
100 MHz	92	90	64	84	82	56	88	86	60
1500 MHz	++	--	++	++	--	++	76	74	57
10,000 MHz	++	--	++	++	--	++	68	66	60

*Source: Engineering Design Handbook--Electromagnetic Compatibility, DARCOM-P 706-410 (U.S. Army Materiel Command, March 1977).

**For signal source 12 inches from shield. Wave impedance much greater than 377 ohms. (For distances much greater smaller than 12 inches, recalculate the reflection loss using the formulas given in text.)

***If penetration loss is less than 10 decibels total, reflection loss must be corrected by use of B-factor.

+Signal source greater than 2 from the shield.

++At these frequencies, the fields approach plane waves with an impedance of 377 ohms .

Table 5-5. Shield effectiveness in magnetic field (wave impedance much smaller than 377 ohms) of solid copper, aluminum, and iron shields for signal source 12 inches from the shield at 150 kilohertz to 100 megahertz*

Frequency, MHz	Copper (10 mils)					Aluminum (10 mils)					Iron (10 mils)				
	A (dB)	+	R (dB)	=	SE (dB)	A (dB)	+	R (dB)	=	SE (dB)	A (dB)	+	R (dB)	=	SE (dB)
0.15	13	+	56	=	69	10	+	54	=	64	169	+	19	=	188
1.0	33	+	64	=	97	26	+	62	=	88	363	+	28	=	391
15	129	+	76	=	205	100	+	74	=	174	1060	+	42	=	1102
100	334	+	84	=	418	260	+	82	=	342	1370	+	56	=	1426

*Source: Engineering Design Handbook--Electromagnetic Compatibility, DARCOM-P 706-410 (U.S. Army Materiel Command, March 1977).

Table 5-6. Shielding effectiveness in plane wave field (wave impedance equal to 377 ohms) of solid copper and iron shields for signal sources greater than 2 inches from the shield at 150 kilohertz to 100 megahertz*

Frequency, MHz	Copper (10 mils)					Iron (10 mils)				
	A (dB)	+	R (dB)	=	SE (dB)	A (dB)	+	R (dB)	=	SE (dB)
0.15	13	+	117	=	130	169	+	79	=	248
1.0	33	+	108	=	141	363	+	72	=	435
15.0	129	+	96	=	125	1060	+	63	=	1123
100.0	334	+	88	=	422	1370	+	60	=	1430

*Source: Engineering Design Handbook--Electromagnetic Compatibility, DARCOM-P 706-410 (U.S. Army Materiel Command, March 1977).

Table 5-7. Shielding effectiveness in electric field (wave impedance much greater than 377 ohms) of solid copper, aluminum, and iron shields for signal source 12 inches from the shield at 0.15 megahertz to 100 megahertz*

Frequency, MHz	Copper (10 mils) A (dB)	+	R (dB)	=	SE (dB)	Aluminum (10 mils) A (dB)	+	R (dB)	=	SE (dB)	Iron (10 mils) A (dB)	+	R (dB)	=	SE (dB)
0.15	13	+	176	=	189	10	+	175	=	185	169	+	139	=	308
1.0	33	+	152	=	185	26	+	150	=	176	363	+	116	=	479
15.0	129	+	116	=	245	100	+	115	=	215	1060	+	83	=	1143
100.0	334	+	92	=	426	260	+	90	=	350	1370	+	64	=	1434

*Source: Engineering Design Handbook--Electromagnetic Compatibility, DARCOM-P 706-410 (U.S. Army Materiel Command, March 1977).

Table 5-8. Re-reflection (B)-factors in electric, magnetic, and plane wave fields of solid copper and iron shields* (sheet 1 of 2)

Shield thickness (mils)	60 Hz	100 Hz	1 kHz	10 kHz	100 kHz	1 MHz
Copper, μ = 1, g = 1, magnetic fields						
1	-22.22	-24.31	-28.23	- 9.61	-10.34	-2.6
5	-21.30	-22.07	-15.83	- 6.98	- 0.55	+0.14
10	-19.23	-18.59	-10.37	- 2.62	+ 0.57	0
20	-15.35	-13.77	- 5.41	+ 0.13	- 0.10	-
30	-12.55	-10.76	- 2.94	+ 0.58	0	-
50	- 8.88	- 7.07	- 0.58	0	-	-
100	- 4.24	- 2.74	+ 0.50	-	-	-
200	- 0.76	+ 0.05	0	-	-	-
300	+ 0.32	+ 0.53	-	-	-	-
Copper, μ = 1, g = 1, electric fields and plane waves						
1	-41.52	-39.31	-29.38	-19.61	-10.33	-2.61
5	-27.64	-25.46	-15.82	- 6.96	- 0.55	+0.14
10	-21.75	-19.61	-10.33	- 2.61	+ 0.57	0
20	-15.99	-13.92	- 5.37	+ 0.14	- 0.10	
30	-12.73	-10.73	- 2.90	+ 0.58	0	-
50	- 8.81	- 6.96	- 0.55	+ 0.14	-	-
100	- 4.08	- 2.61	+ 0.51	0	-	-
200	- 0.62	+ 0.14	0	-	-	-
300	+ 0.41	+ 0.58	-	-	-	-
Iron, μ = 100, g = 0.17, magnetic fields						
1	+ 0.95	+ 1.23	- 1.60	- 1.83	-	-
5	+ 0.93	+ 0.89	- 0.59	0	-	-
10	+ 0.78	+ 0.48	+ 0.06	-	-	-
20	+ 0.35	+ 0.08	0	-	-	-
30	+ 0.06	- 0.06	-	-	-	-
50	0	0	-	-	-	-

Table 5-8. Re-reflection (B)-factors in electric, magnetic, and plane wave fields of solid copper and iron shields* (sheet 2 of 2)

Shield thickness (mils)	60 Hz	100 Hz	1 kHz	10 kHz	100 kHz	1 MHz
Iron, μ = 1000, g = 0.17, electric fields and plane waves						
1	-19.53	-17.41	- 8.35	- 1.31	-	-
5	- 6.90	- 5.17	+ 0.20	0	-	-
10	- 2.56	- 1.31	+ 0.36	-	-	-
20	+ 0.16	+ 0.54	0	-	-	-
30	+ 0.58	+ 0.42	-	-	-	-
50	+ 0.13	0	-	-	-	-

*Source: Engineering Design Handbook--Electromagnetic Compatibility, DARCOM-P 706-410 (U.S. Army Materiel Command, March 1977).

Table 5-9. Shielding effectiveness in electric, magnetic, and plane wave fields of copper shield (7 mils thick) for signal source 165 feet from the shield at 30 hertz to 10 gigahertz*

Frequency	Plane wave, dB	Electric field, dB	Magnetic field, dB
30 Hz	122	213	32
60 Hz	122	207	39
100 Hz	122	202	42
500 Hz	123	189	57
1 kHz	123	183	63
10 kHz	123	163	83
50 kHz	123	149	98
150 kHz	124	140	108
1 MHz	131	--	--
3 MHz	144	--	--
10 MHz	172	--	--
15 MHz	187	--	--
100 MHz	322	--	--
1000 MHz	818	--	--
1500 MHz	981	--	--
10 GHz	2408	--	--

*Source: Engineering Design Handbook--Electromagnetic Compatibility, DARCOM-P 706-410 (U.S. Army Materiel Command, March 1977).

Table 5-10. Shielding effectiveness in electric, magnetic, and plane wave fields of steel shield (1 mil thick) for signal source 165 feet from the shield at 30 hertz to 10 gigahertz*

Frequency	Plane wave, dB	Electric field, dB	Magnetic field, dB
30 Hz	85	175	4
60 Hz	86	171	6
100 Hz	86	166	10
500 Hz	86	152	21
1 kHz	86	146	26
10 kHz	86	125	46
50 kHz	87	113	61
150 kHz	89	105	73
1 MHz	98	--	--
3 MHz	110	--	--
10 MHz	136	--	--
15 MHz	142	--	--
100 MHz	164	--	--
1000 MHz	287	--	--
1500 MHz	186	--	--
10 GHz	164	--	--

*Source: Engineering Design Handbook--Electromagnetic Compatibility, DARCOM-P 706-410 (U.S. Army Materiel Command, March 1977).

Table 5-11. Shielding effectiveness in electric, magnetic, and plane wave fields of steel shield (50 mils thick) for signal source 165 feet from the shield at 30 hertz to 10 gigahertz*

Frequency	Plane wave, dB	Electric field, dB	Magnetic field, dB
30 Hz	121	211	31
60 Hz	123	208	39
100 Hz	125	205	46
500 Hz	138	204	73
1 kHz	151	211	91
10 kHz	249	289	210
50 kHz	455	481	430
150 kHz	725	741	709
1 MHz	1465	--	--
3 MHz	2311	--	--
10 MHz	3801	--	--
15 MHz	4140	--	--
100 MHz	5338	--	--
1000 MHz	11,850	--	--
1500 MHz	6547	--	--
10 GHz	5338	--	--

*Source: Engineering Design Handbook--Electromagnetic Compatibility, DARCOM-P 706-410 (U.S. Army Materiel Command, March 1977).

Table 5-12. Sample calculations of shielding effectiveness for solid metal shield* (sheet 1 of 2)

	10 kHz-10 mils					
	Magnetic field		Electric field		Plane wave	
	Copper	Iron	Copper	Iron	Copper	Iron
Reflection	44.2	8.0	212.0	174.0	128.0	90.5
Absorption	3.6	43.5	3.3	43.5	3.3	43.5
B-factor	-2.6	0	-2.6	0	-2.6	0
Total loss (dB)	45.2	51.5	212.7	217.5	128.7	134.0

	60 Hz-magnetic					
	1 mil		10 mils		300 mils	
	Copper	Iron	Copper	Iron	Copper	Iron
Reflection	22.4	-0.9	22.4	-0.9	22.4	-0.9
Absorption	0.03	0.33	0.26	3.34	7.80	100.0
B-factor	-22.2	+0.95	-19.2	+0.78	+0.32	0
Total loss (dB)	0.23	0.38	3.46	3.22	30.52	99.1

	10 kHz - 30 mils - magnetic		1 kHz - 10 mils - magnetic	
	Copper	Iron	Copper	Iron
Reflection	44.20	8.0	34.2	0.9
Absorption	10.02	130.5	1.06	13.70
B-factor	+0.58	0	-10.37	+0.06
Total loss (dB)	54.80	138.5	24.89	14.66

Table 5-12. Sample calculations of shielding effectiveness for solid metal shield* (sheet 2 of 2)

	10 mils-copper					
	150 kHz			1 MHz		
	Electric	Plane waves	Magnetic	Electric	Plane waves	Magnetic
Reflection	176.8	117.0	56.0	152.0	108.2	64.2
Absorption	12.9	12.9	12.9	33.4	33.4	33.4
B-factor	+0.5	+0.5	+0.5	0	0	0
Total loss (dB)	190.2	130.4	69.4	185.4	141.6	97.6

*Source: Engineering Design Handbook--Electromagnetic Compatibility, DARCOM-P 706-410 (U.S. Army Materiel Command, March 1977).

Table 5-13. Peak voltage induced on 10-meter radius loop inside 10-meter radius spherical shield by the high-altitude EMP (by diffusion through the walls only)*

Shield thickness, mm	Internal voltage induced in loop		
	Copper (5.8×10^7 mho/m)	Aluminum (3.7×10^7 mho/m) $\mu_r = 200$	Steel (6×10^6 mho/m)
0.2	0.34 V	0.85 V0.076 V	
1.0	2.6 mV	6.4 mV1.1 mV	
5.0	21 μV	51 μV 15 μV	

*Source: E. F. Vance, "Electromagnetic Interference Control," IEEE Transactions on Electromagnetic Compatibility, Vol EMC-22 (Institute for Electrical and Electronic Engineers, November 1980).

Table 5-14. Effectiveness of nonsolid shielding materials against low-impedance and plane waves*

Impinging wave	Form: General	Form: Detail	Material	Thickness, mils	Nominal effectiveness, dB: 0.1 kHz	1 kHz	10 kHz	85 kHz	1 MHz	10 MHz
Low impedance	Mesh (screening)	2 layers 1 in. apart	Cu (oxidized)	--	2	6	18	--	--	--
		No. 22	Cu	--	--	--	--	31	43	43
		No. 16	Bronze	--	--	--	--	18	--	--
		No. 4	Galvanized steel	--	--	--	--	10	17	21
Plane	Perforated sheet	45-mil diam 225 sq in.	Al	20	3040 MHz: 60		9380 MHz: 62			
Plane					200 kHz		1 MHz	5 MHz		100 MHz
	Mesh (screening)	No. 16	Al	diam = 13	34		36	--		--
		No. 22	Cu	diam = 15	118		106	100		80

*Source: Electromagnetic Compatibility Design Guide for Avionics and Related Ground Support Equipment, NAVAIR AD1115 (U.S. Department of the Navy, Naval Air Systems Command).

Table 5-15. Effectiveness of nonsolid shielding materials against high-impedance waves*

Form: General	Form: Detailed	Material	Thickness, mils	Nominal effectiveness (14 kHz to 1000 MHz), dB	Nominal effectiveness (14 kHz to 1000 MHz), %	Open area,	Air-flow static pressure, in. of water / 200 cu ft/min	Air-flow static pressure, in. of water / 400 cu ft/min	Air-flow static pressure,
Hexcell	1/4-in. cell, 1-in. thick	Al	3	>90			--	0.06	0.26
TV shadow mask (photo-etched)	9-mil holes, 28-mil centers	95% Cu	7	>90			12	>2	--
		5%					50	0.2	--
		100%	3	>90				0.2	--
Lektromesh	40 count	Cu-Ni	7	>90			36	0.4	1.7
	25 count	Cu-Ni	5	78			49	0.2	0.5
	40 count	Cu	3	78			57	0.2	0.5
	25 count	Cu					56	0.2	0.4
Perforated sheet	1/8-in. diam 3/16-in. centers	Steel	60	58				0.27	>0.6
	1/4-in. diam, 5/16-in. centers	Al	60	48			46	--	--
	7/16-in. diam, 5/8-in. centers	Al	37	35			45	--	--
Mesh (screening)	No. 16 16 x 16/sq in.	Al	20 (diam)	55			36	--	--
	No. 22	Cu		65 (14 kHz - 60 MHz)					
	No. 12	Cu	20 (diam)	50			50	--	--
	No. 16	Bronze		45 (14 kHz - 60 MHz)					
	No. 10	Monel	18 (diam)	40					
	No. 4	Galvanized steel	30 (diam)	35			76	--	--
				28 (14 kHz - MHz)					
	No. 2			24			88	--	--

*Source: R. B. Schultz, et al., "Shielding Theory and Practice," Proceedings of the Tri-Service Conference on Electromagnetic Compatibility (IITRI, October 1973).

EP 1110-3-2
31 Dec 90

Table 5-16. Comparison of measured and calculated values of shielding effectiveness for No. 22, 15-mil copper screens*

Test type	Frequency, MHz	Measured effectiveness, dB	Calculated effectiveness, dB
Magnetic field (r = 1.75 in.)	0.085	31	29
	1.000	43	46
	10.000	43	49
Plane wave	0.200	118	124
	1.000	106	110
	5.000	100	95
	100.000	80	70
Electric field	0.014	65	65

*Source: W. Jarva, "Shielding Efficiency Calculation Methods for Screening, Waveguide Ventilation Panels, and Other Perforated Electromagnetic Shields," Proceedings of the Seventh Conference on Radio Interference Reduction and Electromagnetic Compatibility (IITRI, November 1961).

Table 5-17. Attenuation factors for reinforcement steel construction*

Bar diameter, cm	Bar spacing, cm	Type of construction	Attenuation decrement, ΔdB
5.8	30	Single-course	+5
4.3	35	Single-course	0
2.5	45	Single-course	-6
5.8	50	Double-course	+8.5
4.3	35	Double-course	+13
2.5	40	Double-course	+5

*Source: EMP Engineering Practices Handbook, NATO File No. 1460-2 (October 1977).

Table 5-18. Application factors for welded wire fabric*

Wire diameter, mm	Spacing, cm	Number of courses	Attenuation increment, dB
3	20	1	-3
3	20	2	+4

*Source: EMP Engineering Practices Handbook, NATO File No. 1460-2 (October 1977).

Table 5-19. Typical values of conductivity for soils and rock*

Electrical conductivity, mho/meter	Geological period and rock type				
	Quaternary	Quaternary tertiary cretaceous	Jurassic triassic carboniferous	Devonian silurian ordovician cambrian	Cambrian precambrian
$1x10^{-1}$	Shallow playa deposits	Loam, clay	--	--	--
$3x10^{-2}$		Chalk	Chalk, trap	--	--
$1x10^{-2}$		Alluvium	Alt. basalt, shale	--	--
$3x10^{-3}$			Limestone, sandstone	Shale, limestone	--
$1x10^{-3}$				Sandstone, dolemite	Sandstone
$3x10^{-4}$ to $1x10^{-4}$	Coarse sand and gravel in surface layers	--	--	--	Quartzite, slate, granite, gneiss

*Source: EMP Engineering Practices Handbook, NATO File No. 1460-2 (October 1977).

Table 5-20. Skin depth (d) and absorption loss (A) for nonmetal materials*

Frequency	Water content (%)					
	1		10		50	
	δ(m)	A(dB/m)	δ(m)	A(dB/m)	δ(m)	A(dB/m)
1 kHz	950	0	172	0.1	50	0.2
10 kHz	280	0	53	0.2	16	0.5
100 kHz	80	0.1	16	0.5	5	1.7
300 kHz	40	0.2	9	0.9	2.8	3.0
1 MHz	18	0.5	4.9	1.8	1.5	5.6
3 MHz	8.7	1.0	2.7	3.2	0.87	9.9
10 MHz	3.5	2.5	1.3	6.7	0.46	18.7
100 MHz	0.56	15.6	0.28	31.2	0.12	68.5

*Source: EMP Engineering Practices Handbook, NATO File No. 1460-2 (October 1977). Calculated using infinite-plane geometry.

Table 5-21. Electromotive series

Element	Volts	Ion	Element	Volts	Ion
Lithium	2.9595		Tin	0.136	
Rubidium	2.9259		Lead	0.122	Pb^{++}
Potassium	2.9241		Iron	0.045	Fe^{+++}
Strontium	2.92		Hydrogen	0.000	
Barium	2.90		Antimony	-0.10	
Calcium	2.87		Bismuth	-0.226	
Sodium	2.7146		Arsenic	-0.30	
Magnesium	2.40		Copper	-0.344	Cu^{++}
Aluminum	1.70		Oxygen	-0.397	
Beryllium	1.69		Polonium	-0.40	
Uranium	1.40		Copper	-0.470	Cu^{+}
Manganese	1.10		Iodine	-0.5345	
Tellurium	0.827		Tellurium	-0.558	Te^{++++}
Zinc	0.7618		Silver	-0.7978	
Chromium	0.557		Mercury	-0.7986	
Sulfur	0.51		Lead	-0.80	Pb^{++++}
Gallium	0.50		Palladium	-0.820	
Iron	0.441	Fe^{++}	Platinum	-0.863	
Cadmium	0.401		Bromine	-1.0648	
Indium	0.336		Chlorine	-1.3583	
Thallium	0.330		Gold	-1.360	Au^{++++}
Cobalt	0.278		Gold	-1.50	Au^{+}
Nickel	0.231		Fluorine	-1.90	

Table 5-22. Characteristics of conductive gasketing materials*

Material	Chief advantages	Chief limitations
Compressed knitted wire	Most resilient all-metal gasket (low flange pressure required). Most points of contact. Available in variety of thicknesses and resiliencies, and in combination with neoprene and silicone.	Not available in sheet (certain intricate shapes difficult to make). Must be 0.040 in. or thicker. Subject to compression set.
Brass or beryllium copper with punctured nail holes	Best breakthrough of corrossion protection films.	Not truly resilient or generally reusable.
Oriented wires in rubber silicone	Combines fluid and RF seal. Can be effective against corrosion films if ends of wires are sharp.	Might require wider or thicker size gasket for same effectiveness. Effectiveness declines with mechanical use.
Aluminum screen impregnated with neoprene	Combines fluid and conductive seal. Thinnest gasket. Can be cut to intricate shapes.	Very low resiliency (high flange pressure required).
Soft metals	Cheapest in small sizes.	Cold flows, low resiliency.
Metal over rubber	Takes advantage of the resiliency of rubber.	Foil cracks or shifts position. Generally low insertion loss yielding poor RF properties.
Conductive rubber (carbon-filled)	Combines fluid and conductive seal.	Provides moderate insertion loss.
Conductive rubber (silver-filled)	Combines fluid and RF seal. Excellent resilience with low compression set. Reusable. Available in any shape or cross section.	Not as effective as metal in magnetic fields. May require salt spray environmental protection.
Contact fingers	Best suited for sliding contact.	Easily damaged. Few points of contact.

*Source: MIL-HDBK-335 (USAF), Management and Design Guidance, Electromagnetic Radiation Hardness for Air Launched Ordnance Systems (DOD, 15 January 1981).

This page not used.

Table 5-24. Comparison of protection devices

Device type	Clamping (or filtering) thresholds	Operate time, sec	Highest burnout-energy thresholds, J	Shunt capacitance F	Typical circuit applications	Possible disadvantages
Varistors						
MOV	40-1500 V	$<10^{-9}$	$<10^{3}$	10^{-9}	Power, AF	High capacitance
SiC	15-10,000 V	$<10^{-9}$	$<10^{5}$	$<10^{-9}$	Power, term.	Poor clamping
Semiconductors						
Forward diodes (Si Ge)	0.2-0.6 V	$<10^{-9}$	$<10^{1}$	$<10^{-12}$	AF, RF	Low burnout energy
Breakdown diodes (Si, Ge)	2-200 V	$<10^{-9}$	$<10^{2}$	$<10^{-8}$	Power, AF	High capacitance
Selenium-diode packages	30-2000 V	$<10^{-9}$	$<10^{4}$	$<10^{-7}$	Power	High capacitance
Diode thyristors (p-n-p-n)	25-1800 V	$<10^{-6}$	$<10^{1}$	$<10^{-6}$	AF	Latch-up, di/dt burn-out, slow response, high capacitance
Triggered thyristors (SCRs)	25-1800 V	$<10^{-5}$	$<10^{1}$	$<10^{-6}$	AF, alarm	Latch-up, di/dt burn-out, slow response high capacitance
Spark gaps						
Carbon blocks	330-800 V	$<10^{-6}$	$<10^{4}$	$<10^{-11}$	Term., AF, RF	Power-follow, slow response
Ordinary gas tubes	60-30,000	$<10^{-5}$	$<10^{6}$	$<10^{-11}$	Term., AF, RF	Power-follow, slow response, high cost
High-speed gaps	550-20,000	$<10^{-9}$	$<10^{3}$	$<10^{-11}$	Term., AF, RF	Power-follow, high cost
Ordinary arresters	60-30,000 V	$<10^{-5}$	$<10^{3}$	$<10^{-11}$	Power	Slow response, high cost
Arresters using high-speed gaps	550-20,000 V	$<10^{-9}$	$<10^{3}$	$<10^{-11}$	Power	High cost

Table 5-25. Galvanic series for selected metals

Corroded end (anodic, or least noble)	Nickel (active)
	Inconel (active)
Magnesium	Brasses
Magnesium alloys	Copper
Zinc	Bronzes
Aluminum 2S	Copper-nickel alloys
Cadmium	Monel
Aluminum 17ST	Silver solder
Steel or iron	Nickel (passive)
Cast iron	Inconel (passive)
Chromium-iron (active)	Chromium-iron (passive)
Ni-Resist	18-8 Stainless (passive)
18-8 Stainless (active)	18-8-3 Stainless (passive)
18-8-3 Stainless (active)	Silver
Lead-tin solders	Graphite
Lead	Gold
Tin	Platinum
	Protected end (cathodic, or most noble)

Table 5-26. Relative advantages and disadvantages of the principal types of earth electrodes

Type	Advantages	Disadvantages
Vertical rods	Straightforward design. Easiest to install (particularly around an existing facility). Hardware readily available. Can be extended to reach water table.	High impulse impedance. Not useful where large rock formations are near surface. Step voltage on earth surface can be excessive under high fault currents or during direct lightning strike.
Horizontal grid	Minimum surface potential gradient. Straightforward installation if done before construction. Can achieve low resistance contact in areas where rock formations prevent use of vertical rods. Can be combined with vertical rods to stabilize resistance fluctuations.	Subject to resistance fluctuation with soil drying if vertical rods not used.
Plates	Can achieve low resistance contact in limited area.	Most difficult to install.
Horizontal wires	Can achieve low resistance where rock formations prevent use of vertical rods. Low impulse impedance. Good RD counterpoise when laid in star pattern.	Subject to resistance fluctuations with soil drying.
Incidental electrodes (utility pipes, building foundations, buried tanks)	Can exhibit very low resistance if electrically continuous. Generally lowest initial cost (borne by others).	Little or no control over future alterations.

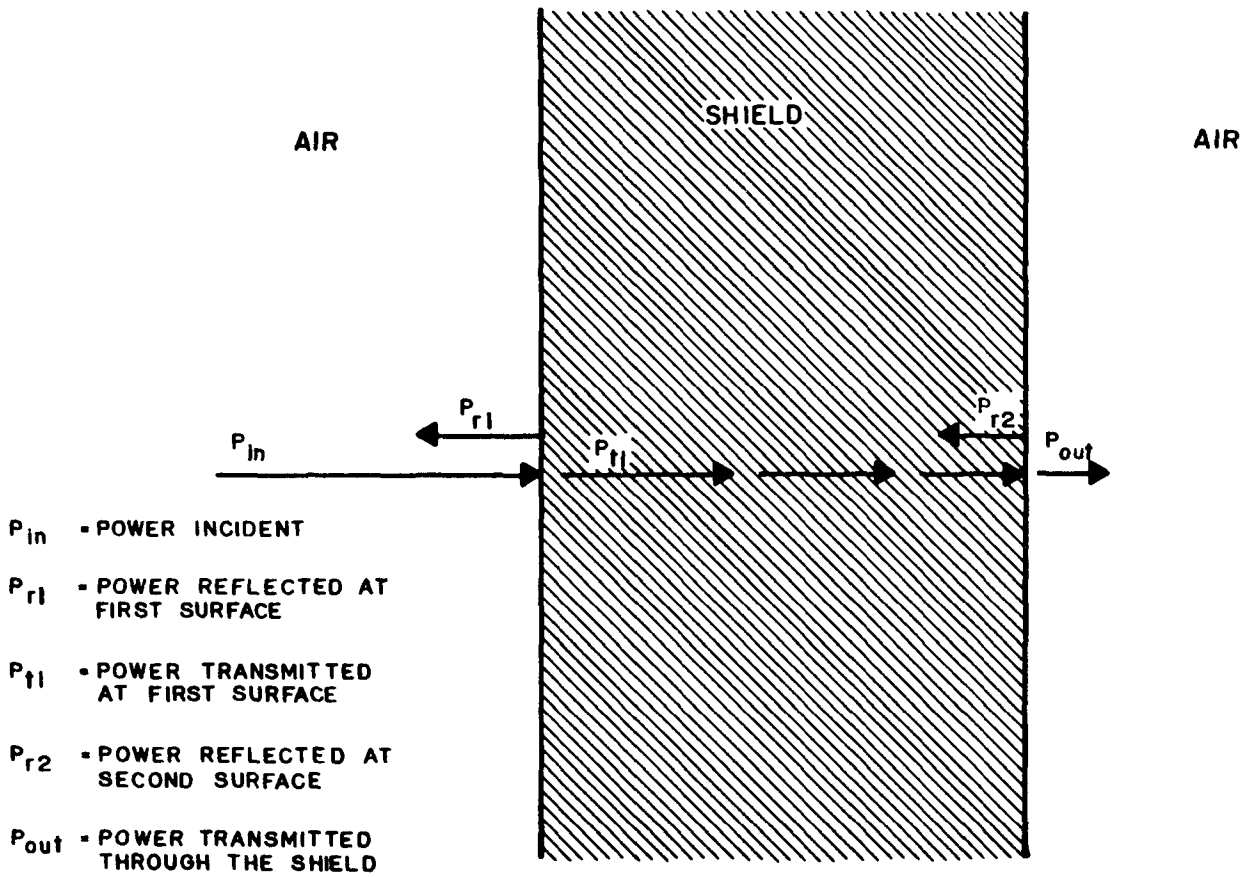

Figure 5-1. Transmission line model of shielding. (Source: ref 5-6)

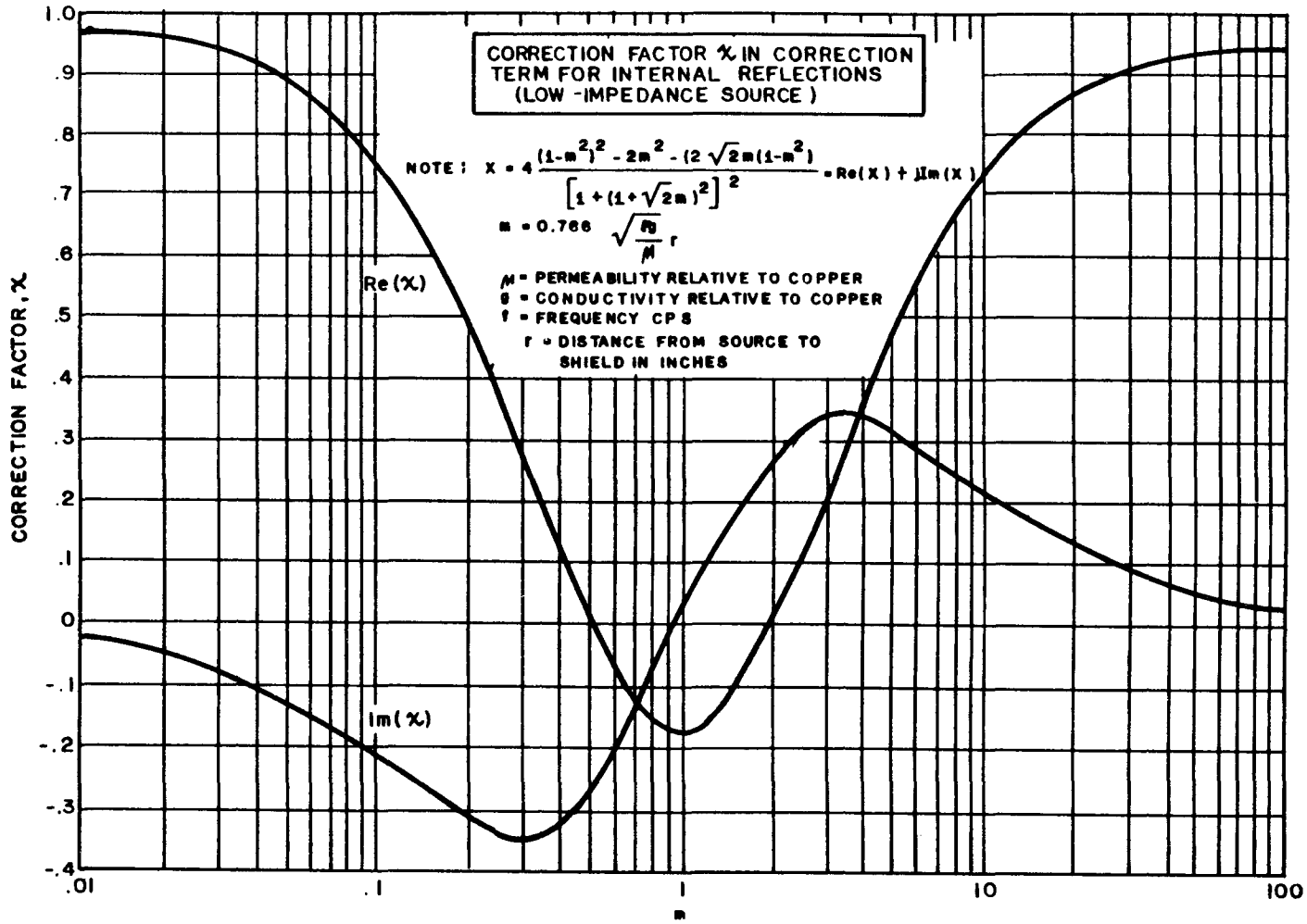

Figure 5-2. Correction factor in correction term for internal reflections. (Source: ref 5-3)

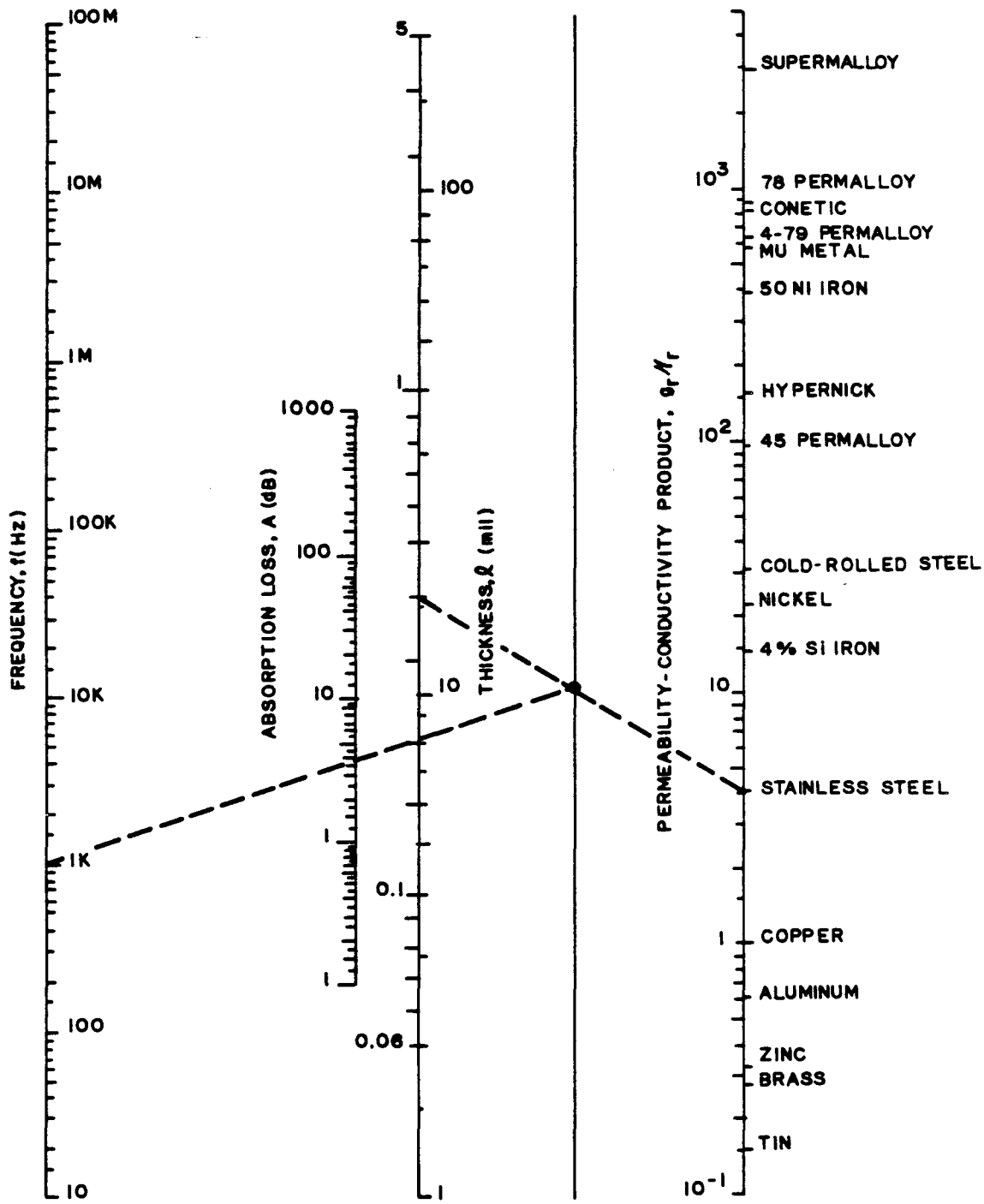

Figure 5-3. Shield absorption loss nomograph. (Source: ref 5-6)

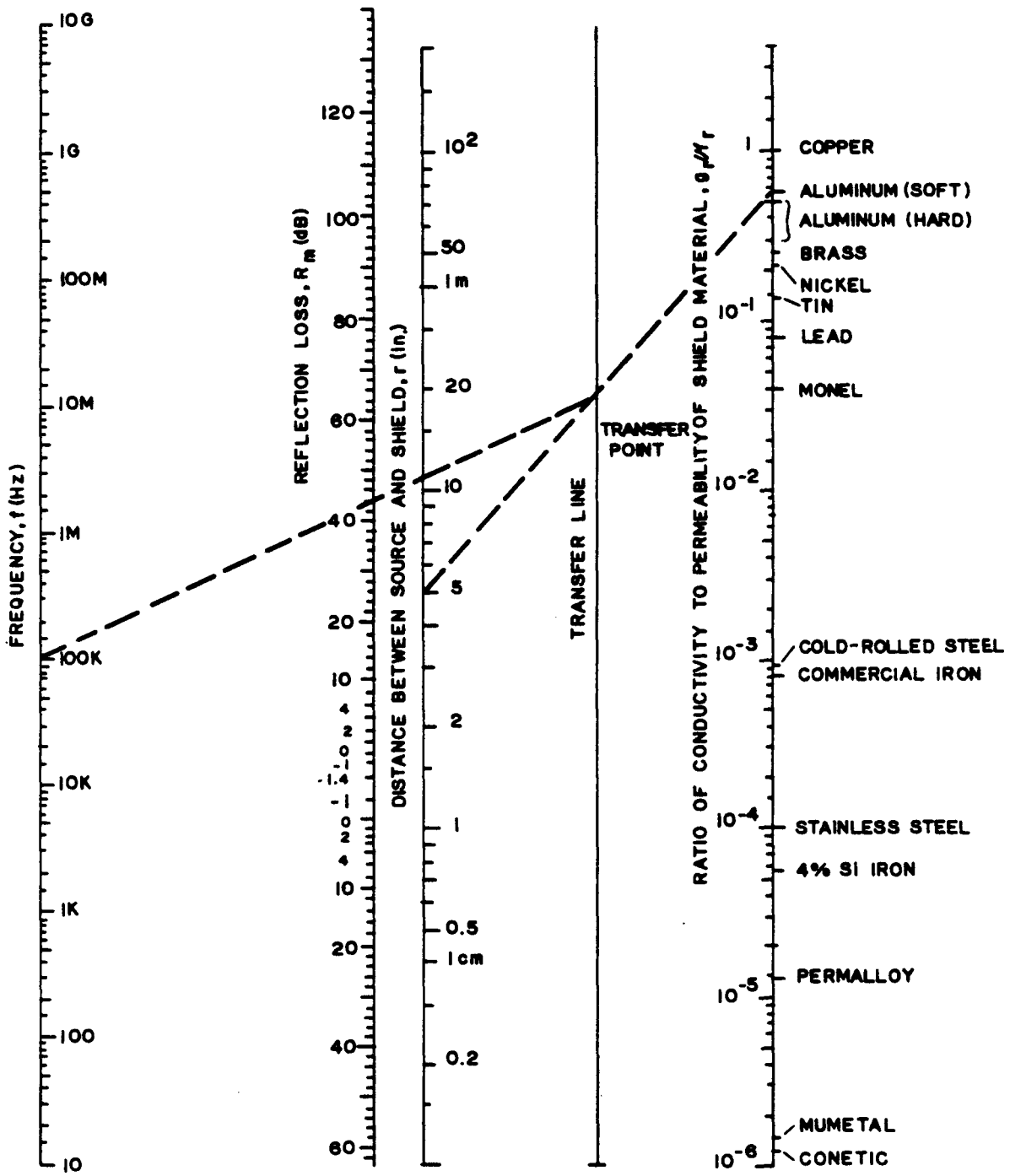

Figure 5-4. Nomograph for determining magnetic field reflection loss. (Source: ref 5-6)

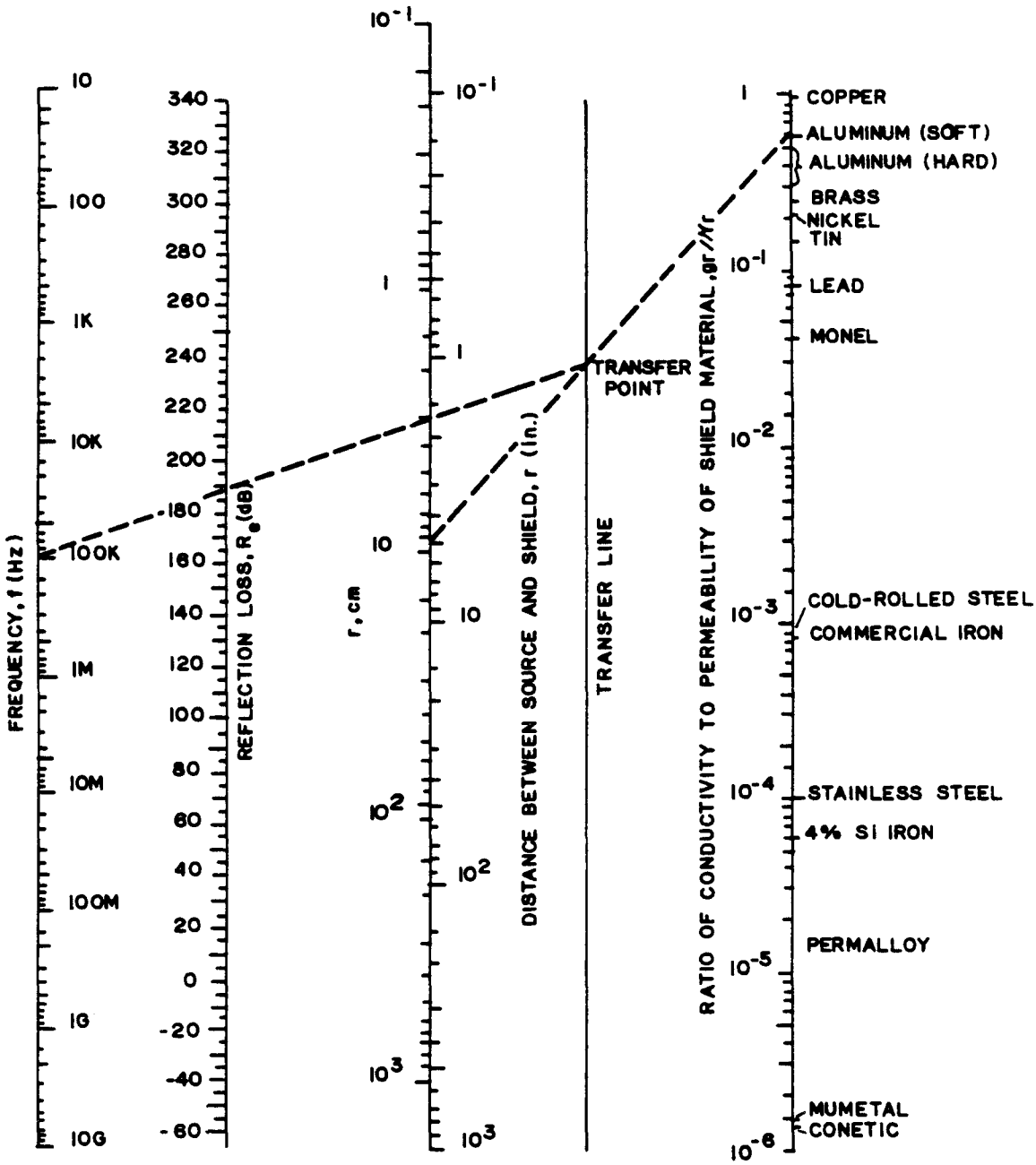

Figure 5-5. Nomograph for determining electric field reflection loss. (Source: ref 5-3)

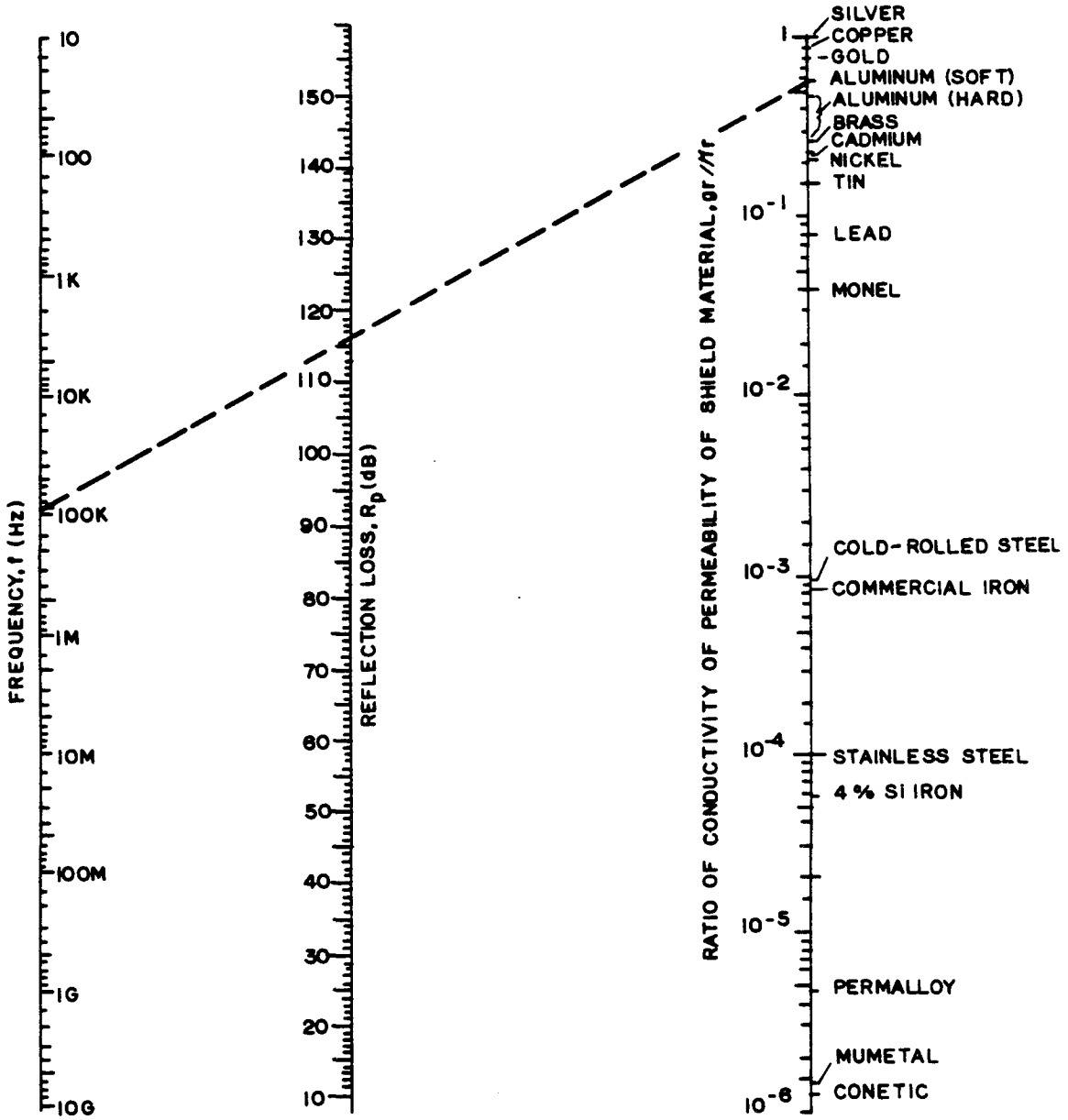

Figure 5-6. Nomograph for determining plane wave reflection loss. (Source: ref 5-3)

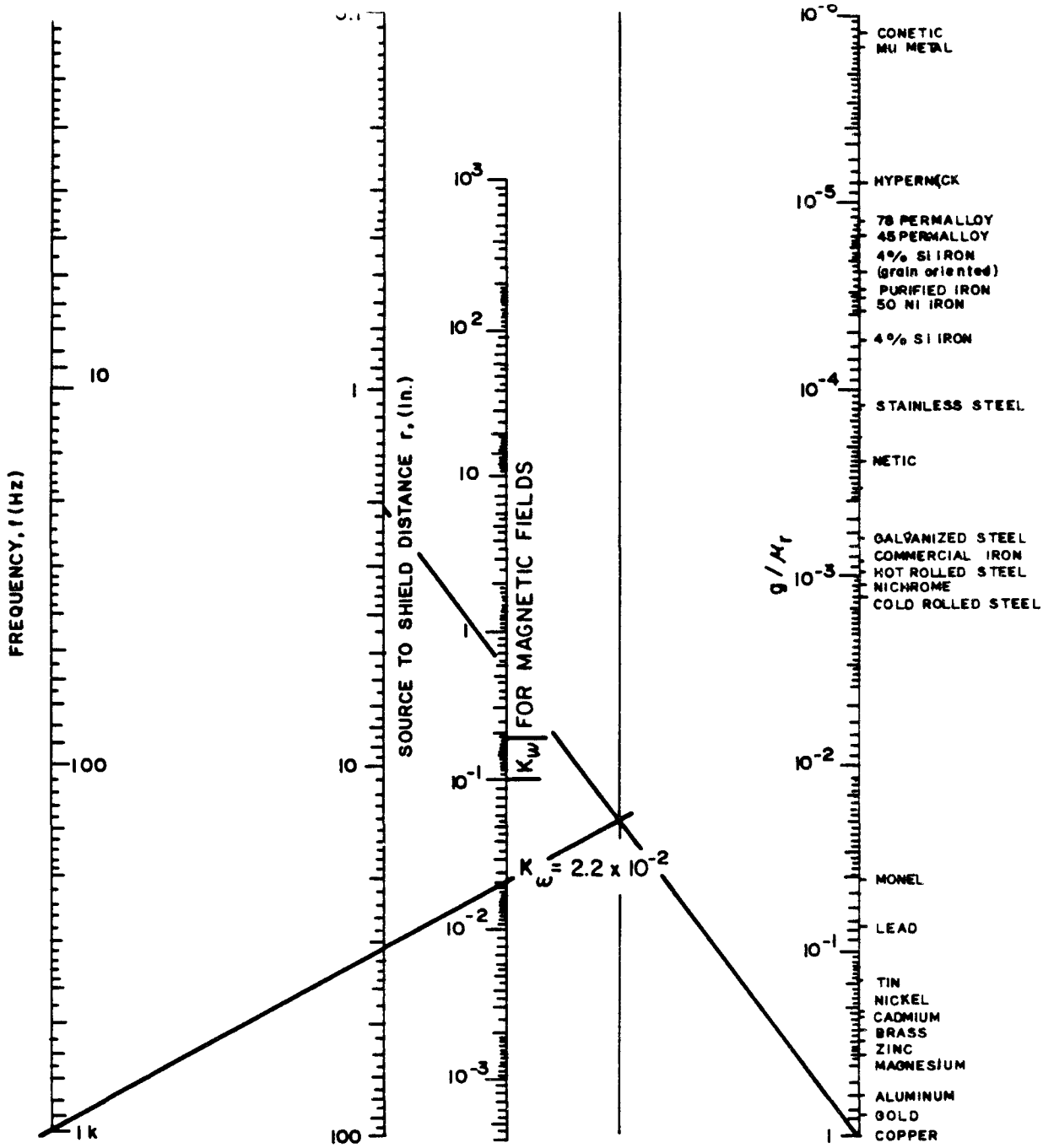

Figure 5-7. Chart for computing K for magnetic field secondary reflection loss. (Source: ref 5-3)

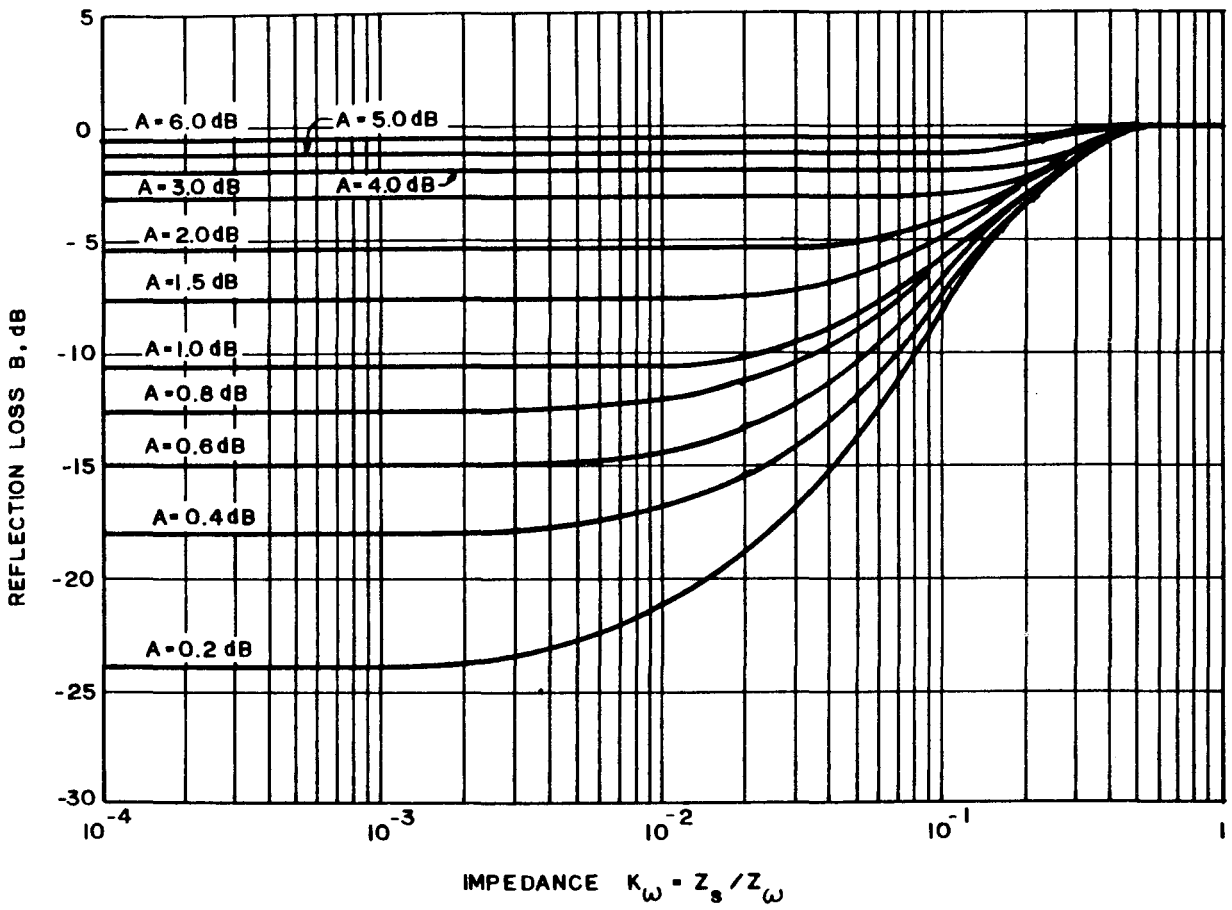

Figure 5-8. Chart for computing secondary losses for magnetic fields. (Source: ref 5-3)

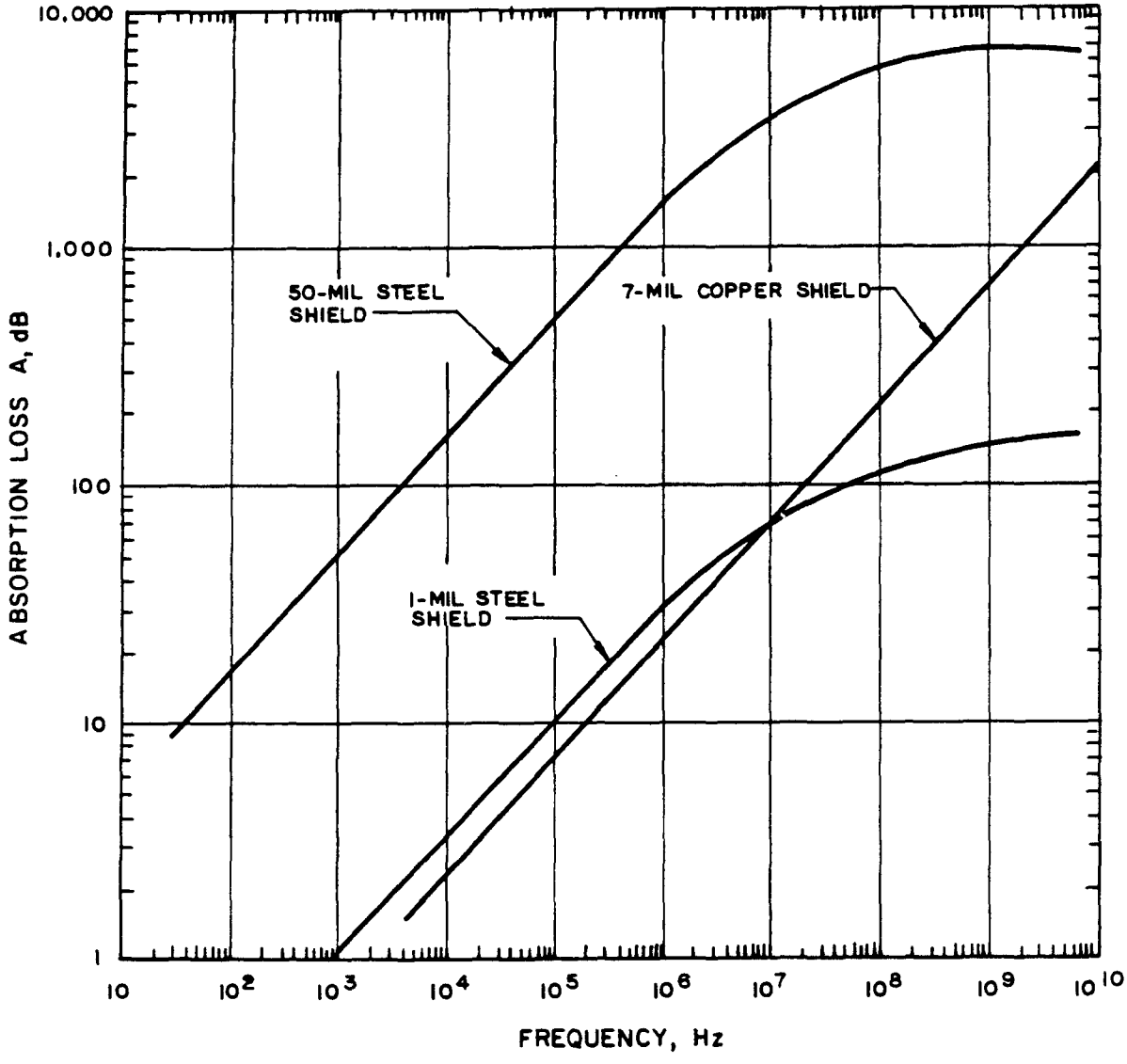

Figure 5-9. Absorption loss for steel and copper shields at 30 hertz to 10,000 megahertz. (Source: ref 5-3)

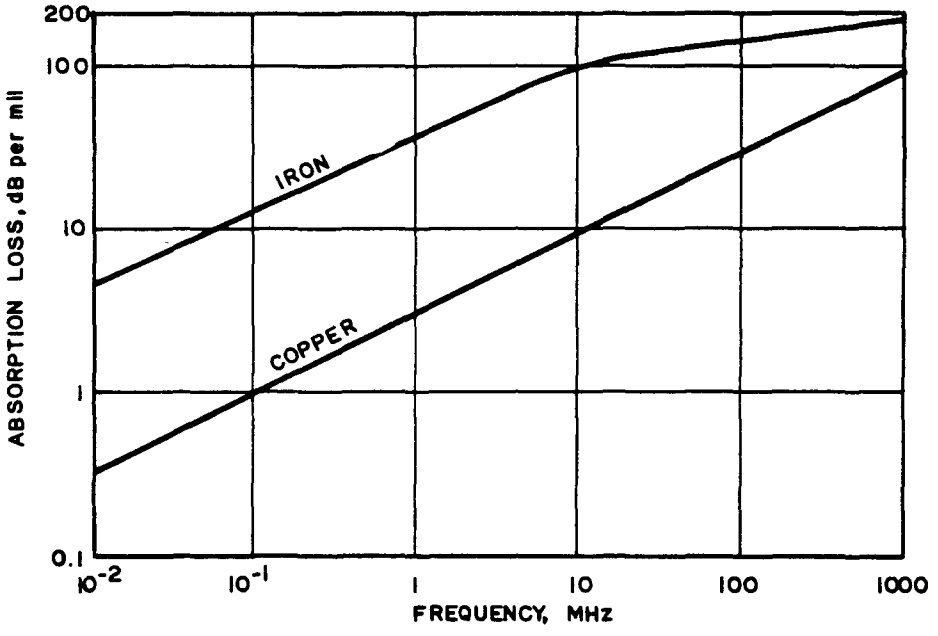

Figure 5-10. Absorption loss for copper and iron, in decibels per mil. (Source: ref 5-3)

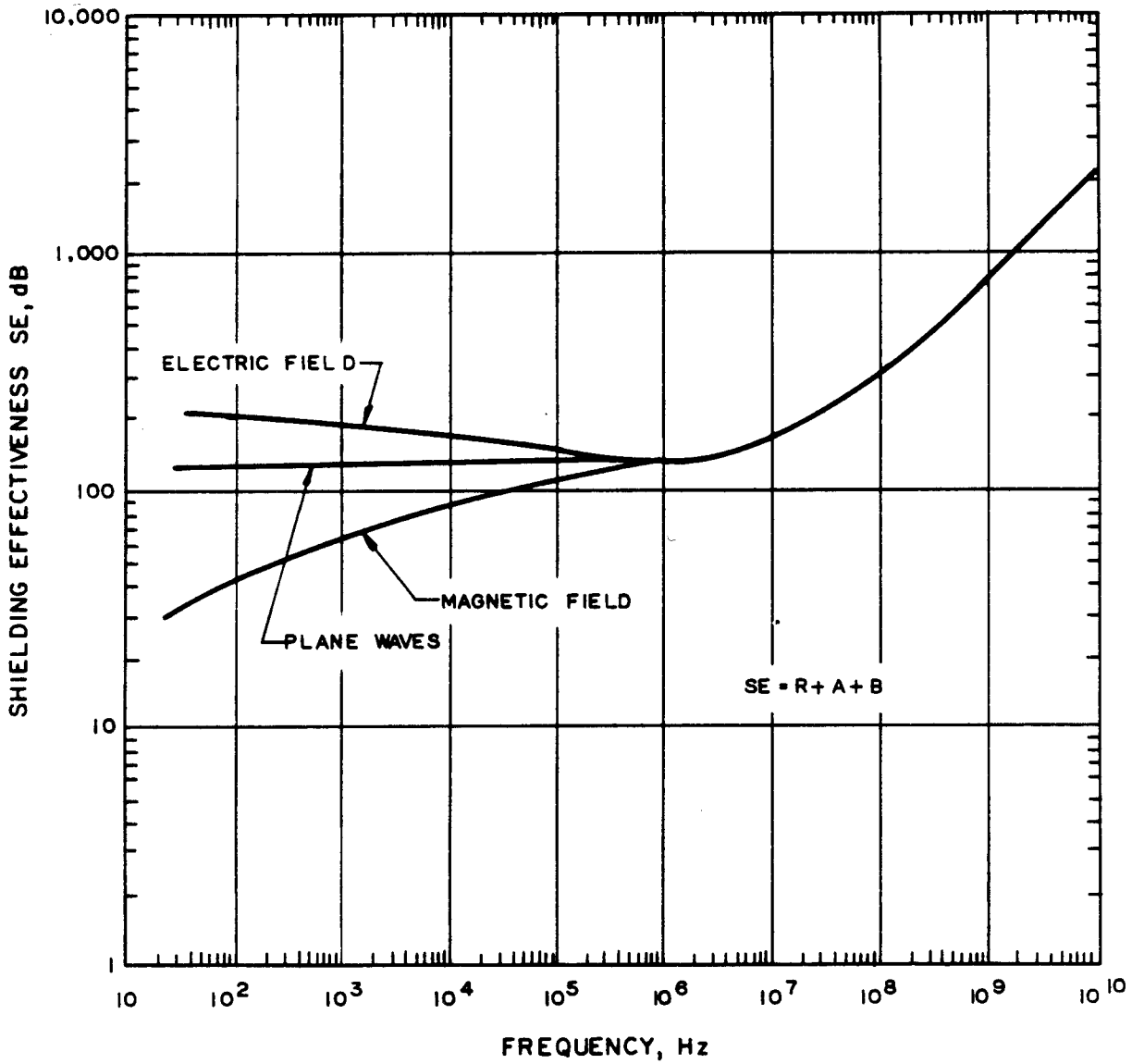

Figure 5-11. Shielding effectiveness in electric, magnetic, and plane wave fields of copper shields (7 mils thick) for signal source 165 feet from the shield. (Source: ref 5-3)

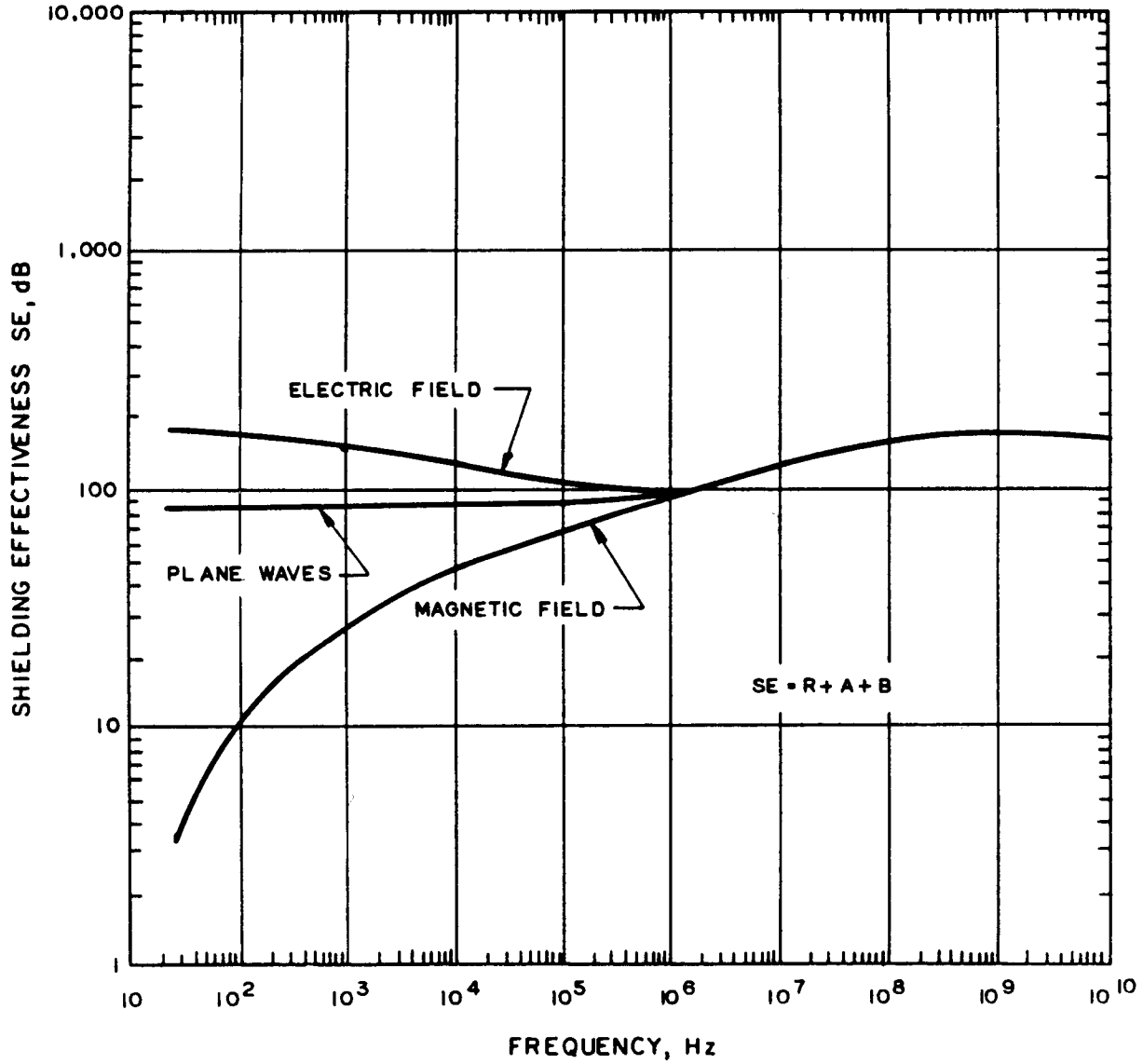

Figure 5-12. Shielding effectiveness in electric, magnetic, and plane wave fields of steel shield (1 mil thick) for signal sources 165 feet from the shield. (Source: ref 5-3)

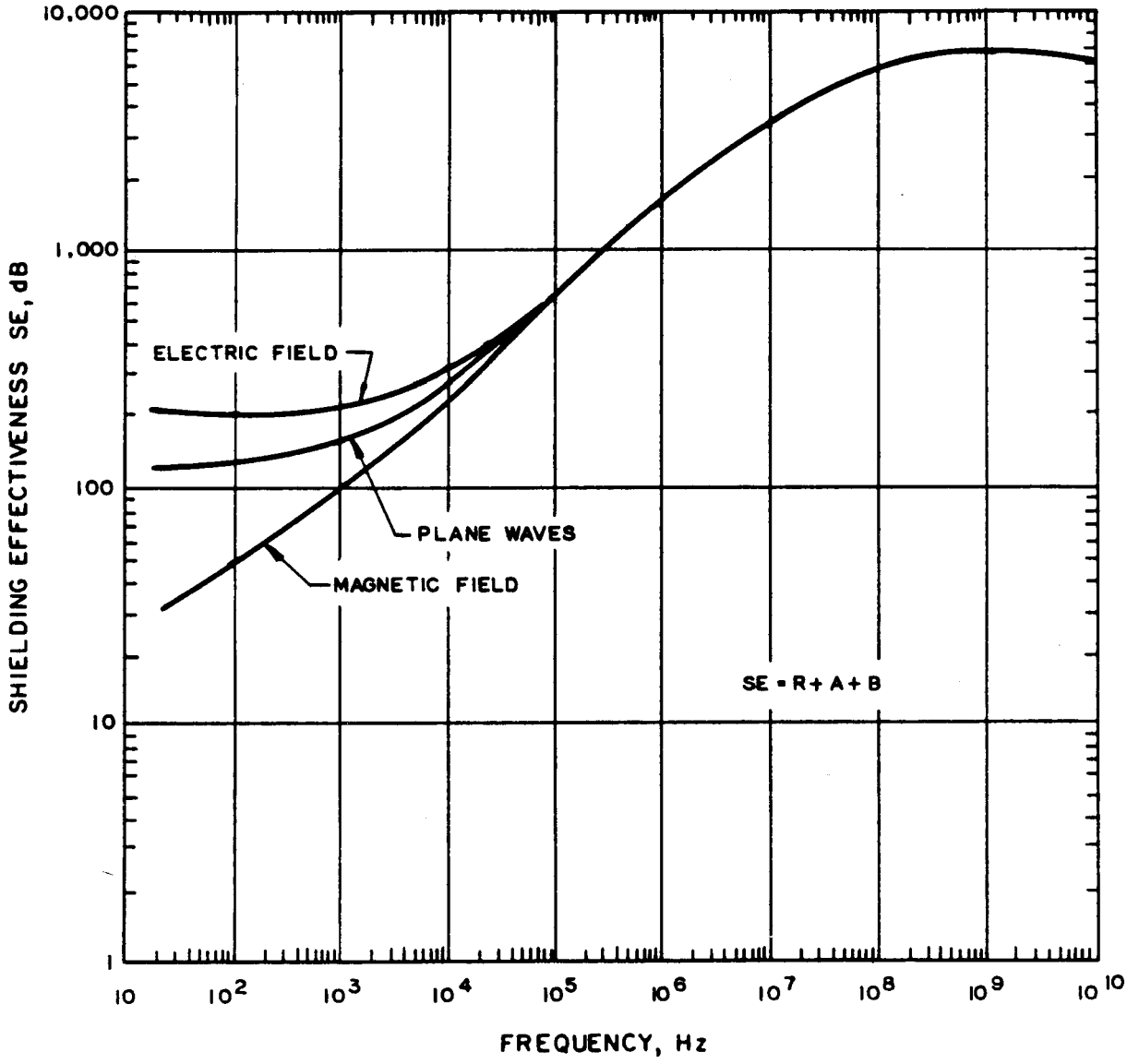

Figure 5-13. Shielding effectiveness in electric, magnetic, and plane wave fields of steel shield (50 mils thick) for signal sources 165 feet from the shield. (Source: ref 5-3)

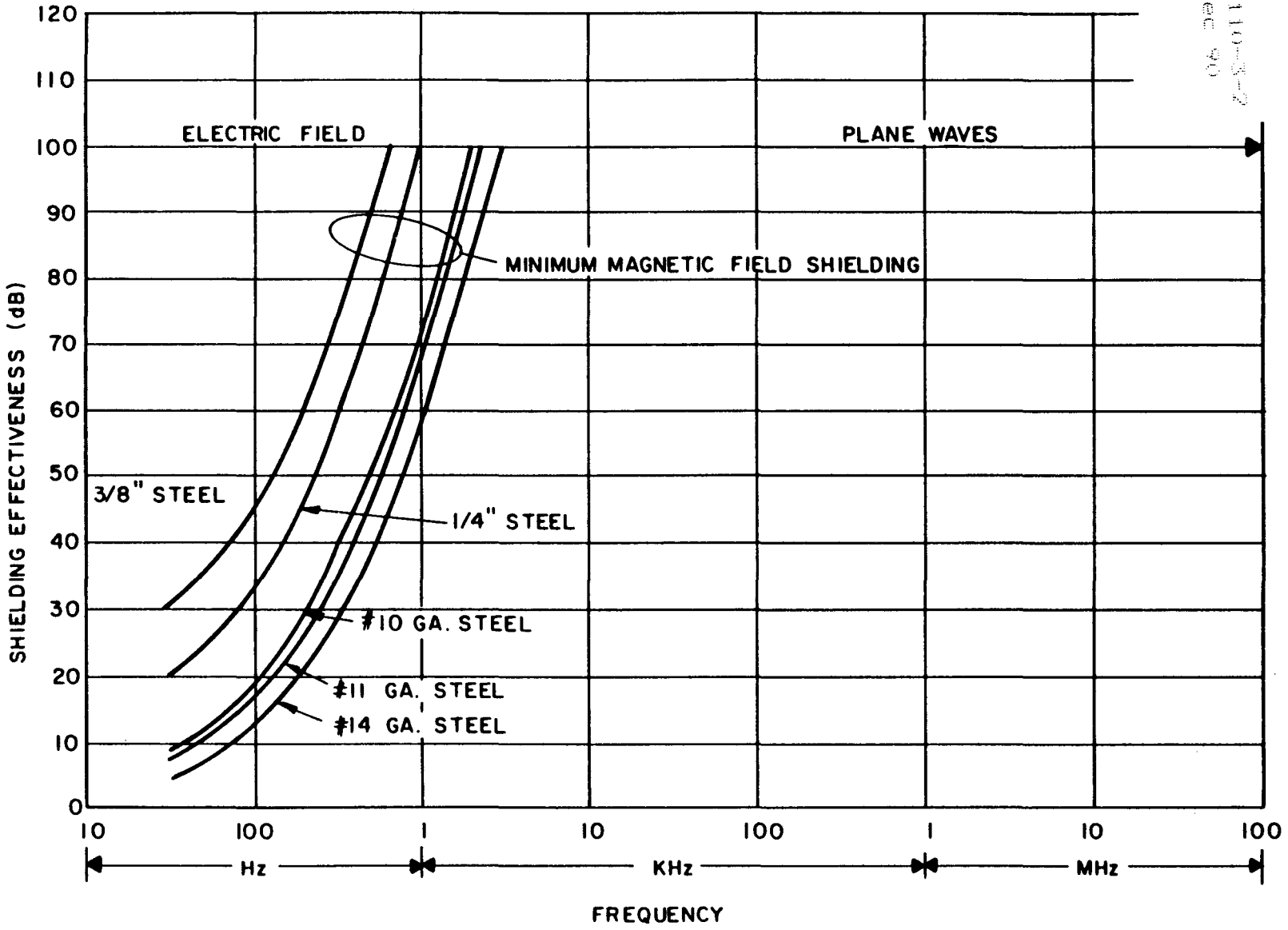

Figure 5-14. Minimum shielding effectiveness of low-carbon steel walls. (Source: ref 5-28)

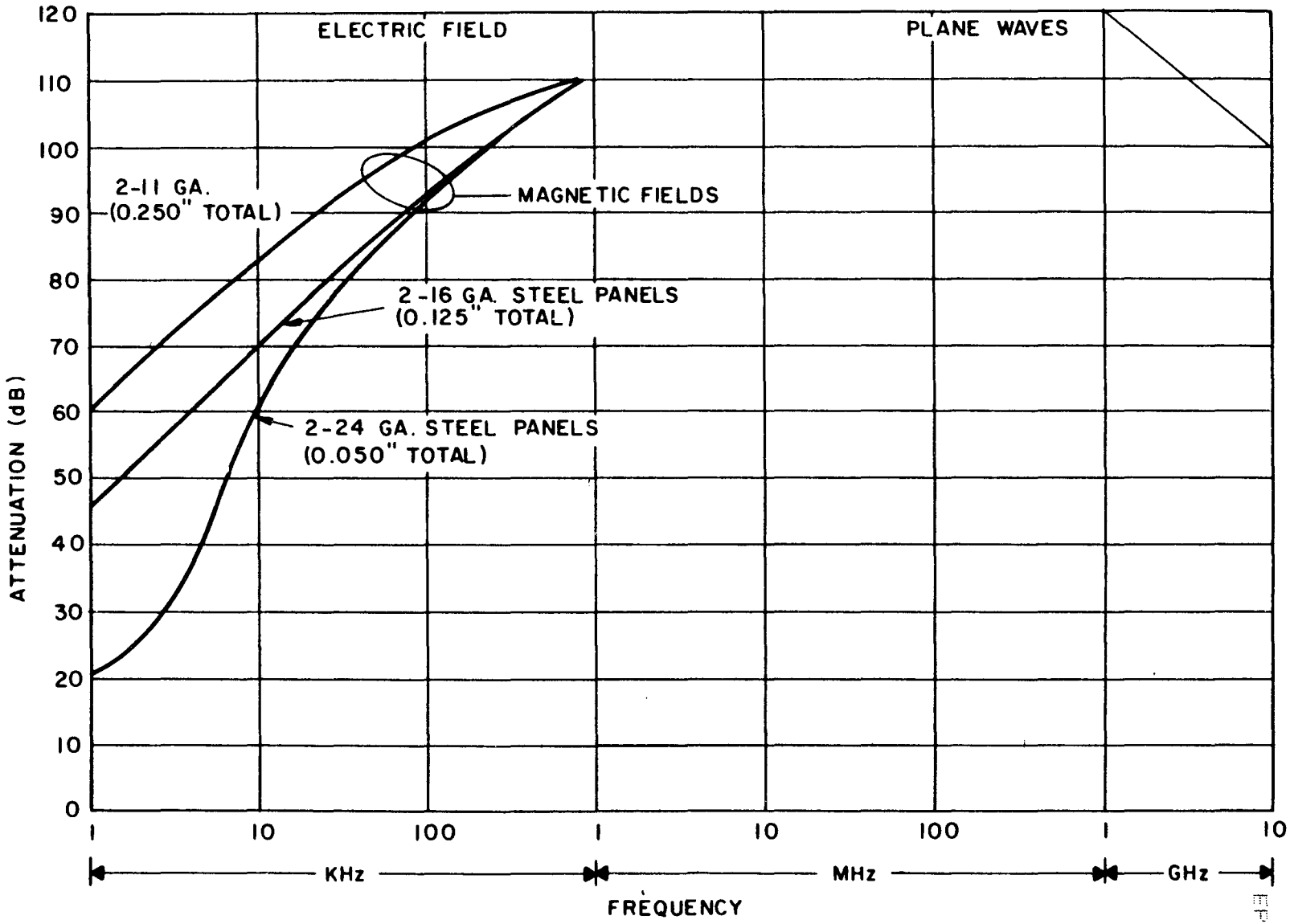

Figure 5-15. Performance characteristics of typical commercial shielded enclosures. (Source: ref 5-28)

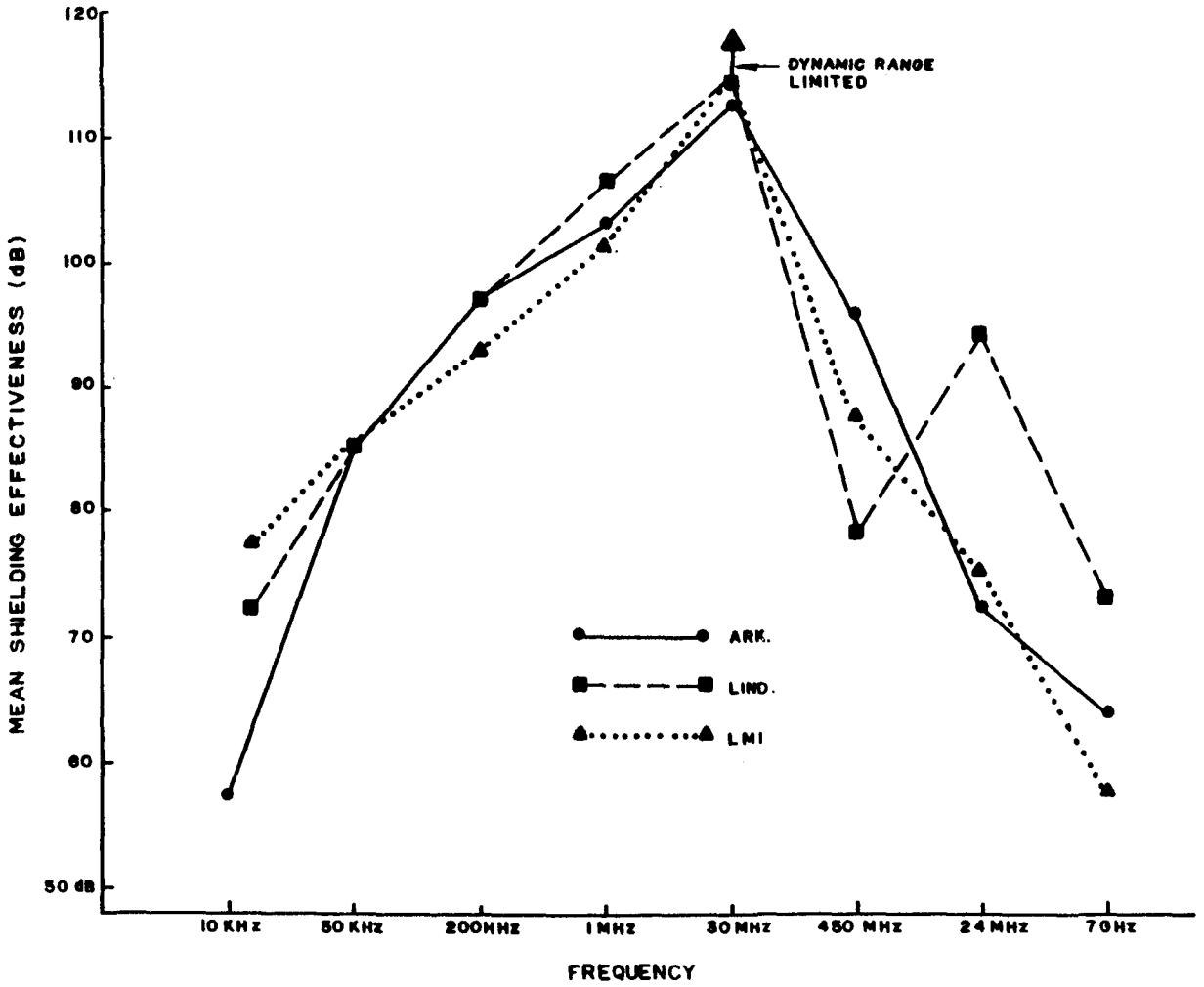

Figure 5-16. Mean shielding effectiveness for all test points for the June 1980 test. (Source: ref 5-29)

This page not used.

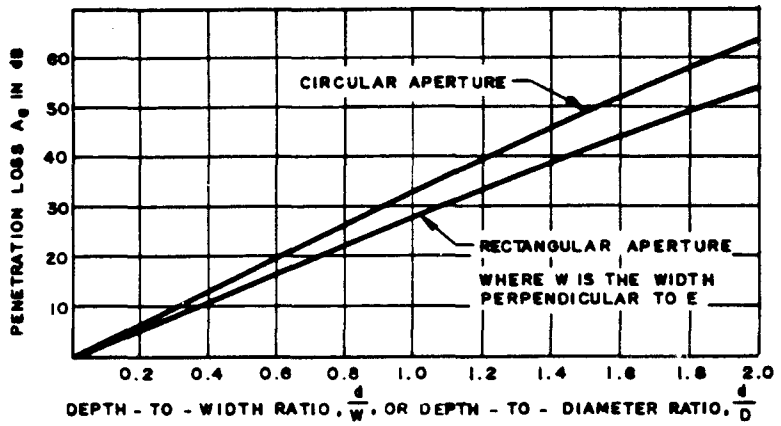

(a)

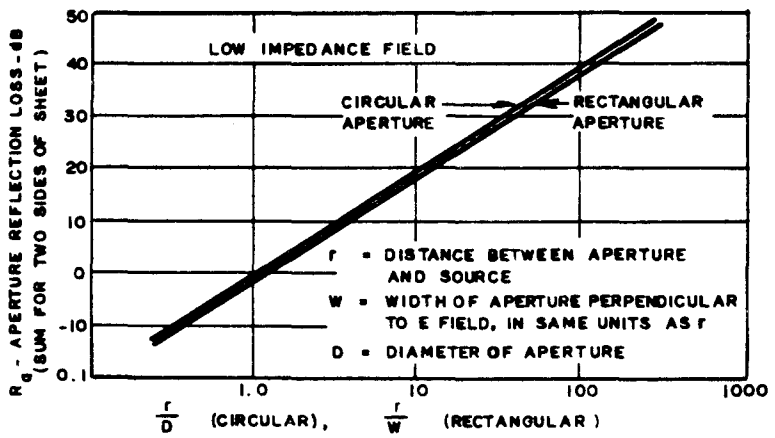

(b)

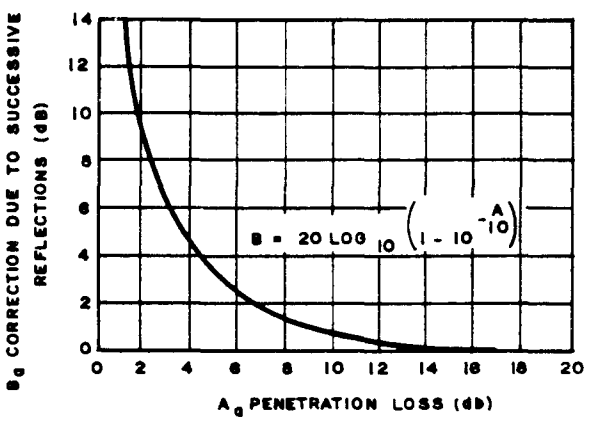

(c)

Figure 5-18. Aperture shielding. (sheet 1 of 2)

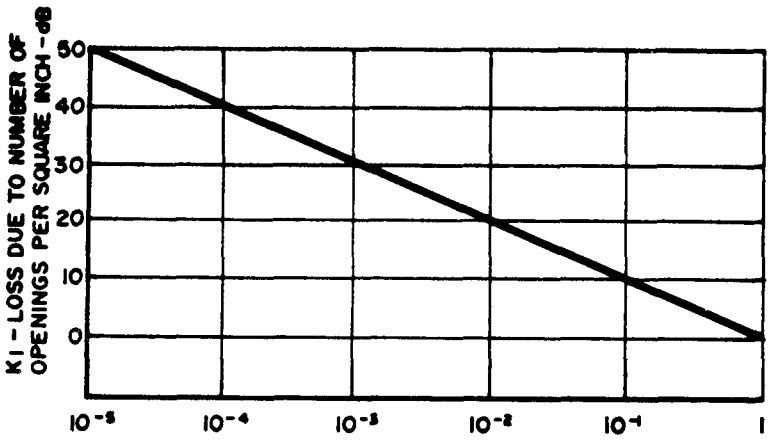

$K_1 = -10 \text{ LOG } an$, $r \gg W, D$

a = AREA OF SINGLE APERTURE

n = NUMBER OF APERTURES PER SQUARE INCH

r = DISTANCE BETWEEN SOURCE AND APERTURES

W = WIDTH OF RECTANGULAR APERTURES, PERPENDICULAR TO FIELD

D = DIAMETER OF CIRCULAR APERTURES

(d)

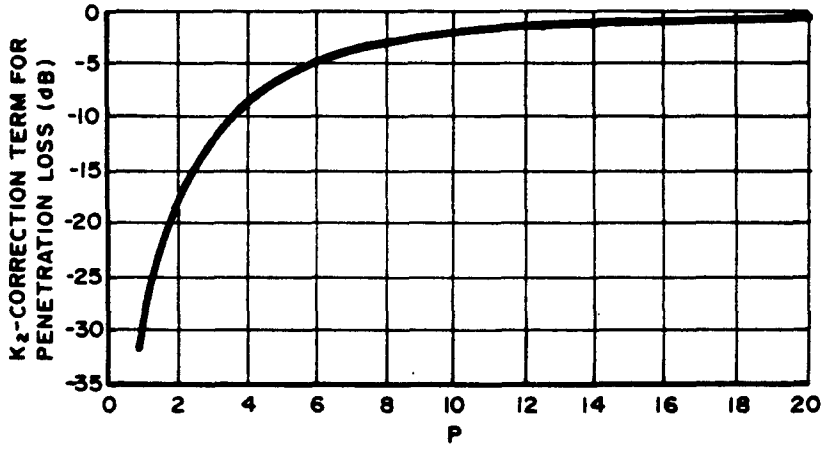

$P = \frac{\text{WIRE DIAMETER}}{\text{SKIN DEPTH}}$ FOR SCREENING

$= \frac{\text{CONDUCTOR WIDTH BETWEEN HOLES}}{\text{SKIN DEPTH}}$

FOR PERFORATED SHEETS

$K_2 = -20 \text{ LOG}_{10} (1 + 35P^{-2.3})$

(e)

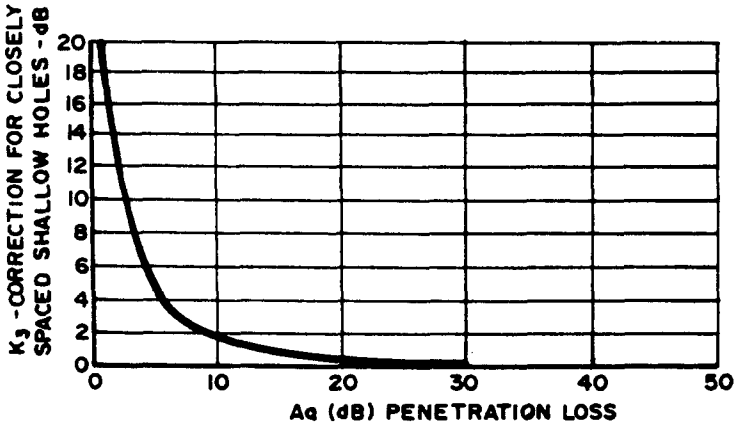

$K = 20 \text{ LOG} \left(\text{COTH} \frac{A\alpha}{8.686}\right)$

(f)

Figure 5-18. Aperture shielding. (sheet 2 of 2)

This page not used.

This page not used.

This page not used.

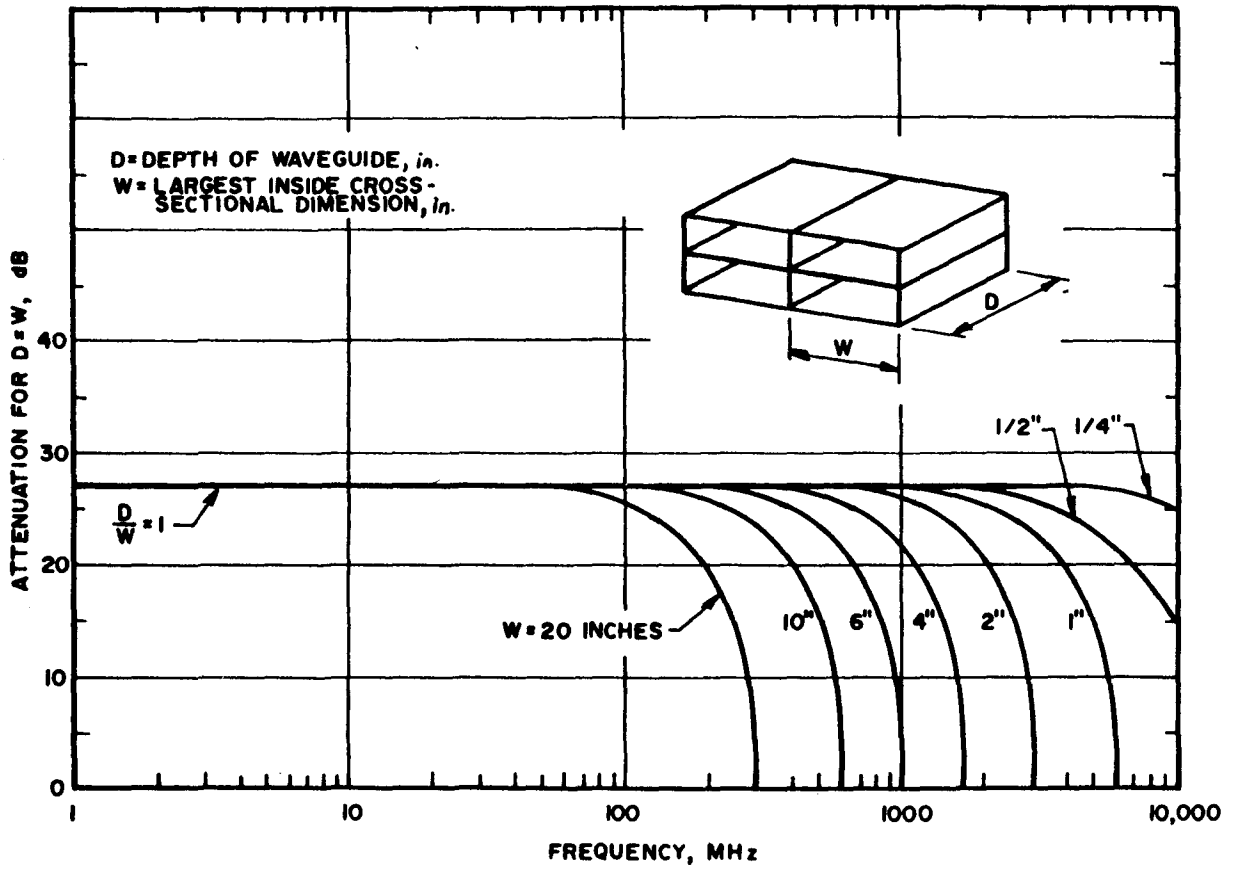

Figure 5-22. Attenuation--rectangular waveguide. (Source: ref 5-3)

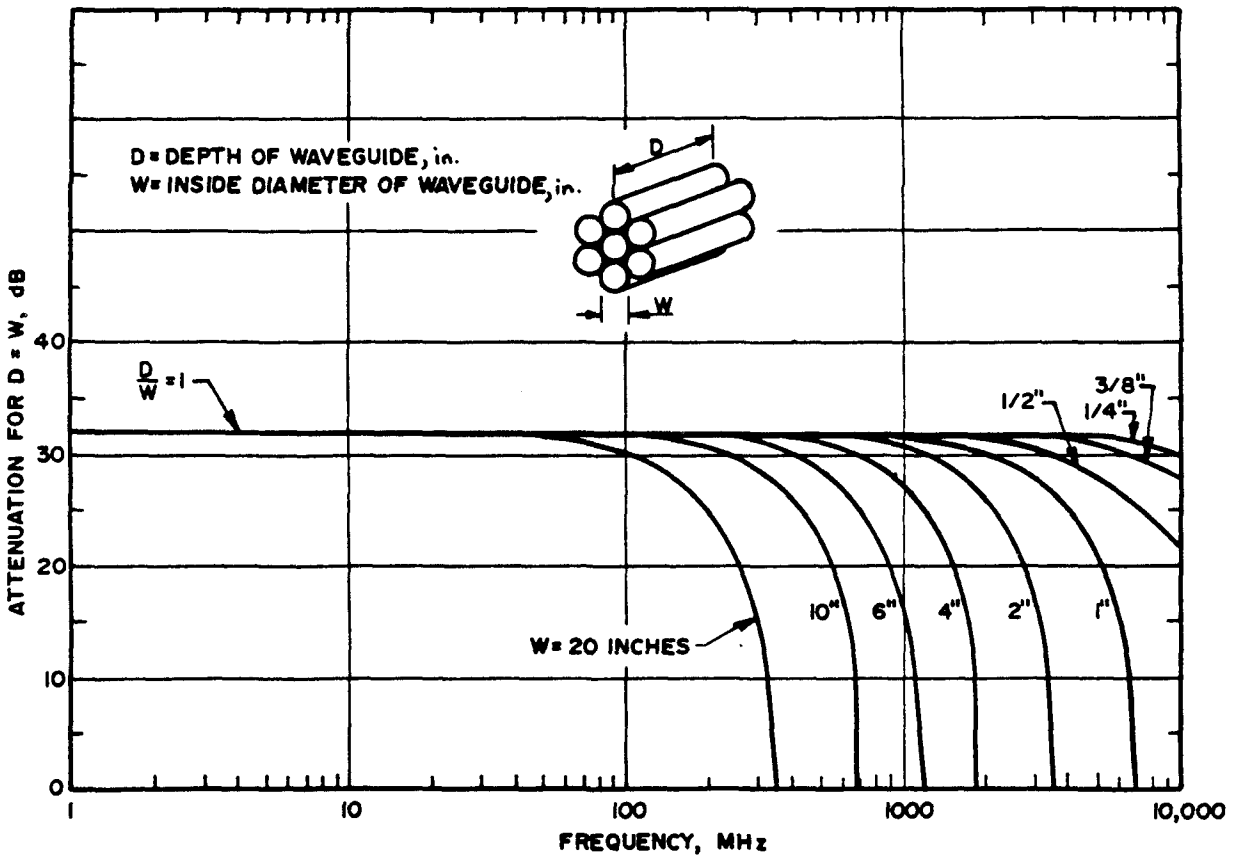

Figure 5-23. Attenuation--circular waveguide. (Source: ref 5-3)

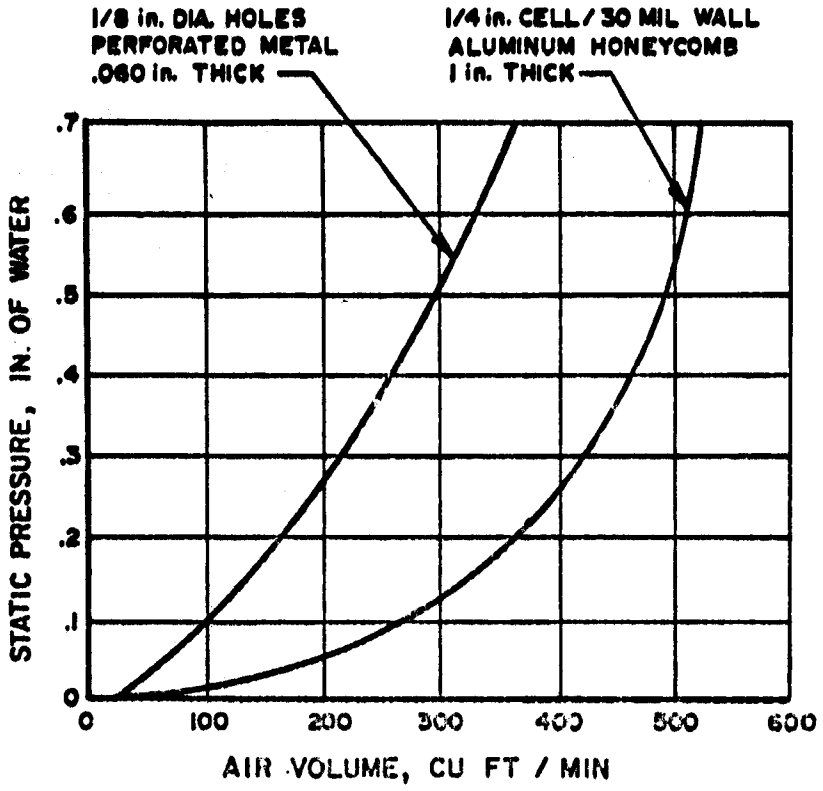

Figure 5-24. Air impedance of perforated metal and honeycomb. (Source: ref 5-3)

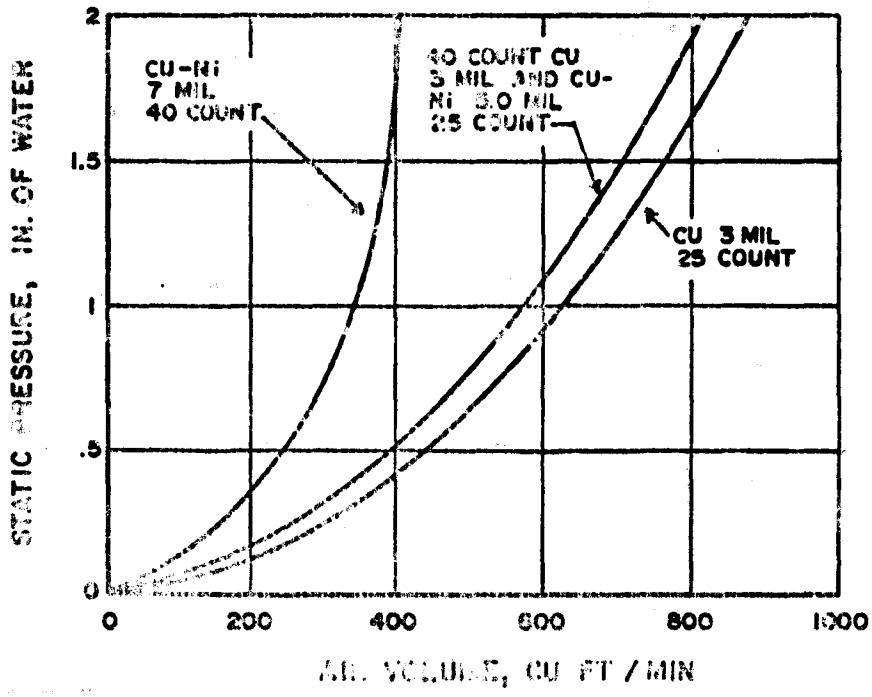

Figure 5-25. Air impedance of copper and nickel mesh. (Source: ref 5-3)

This page not used.

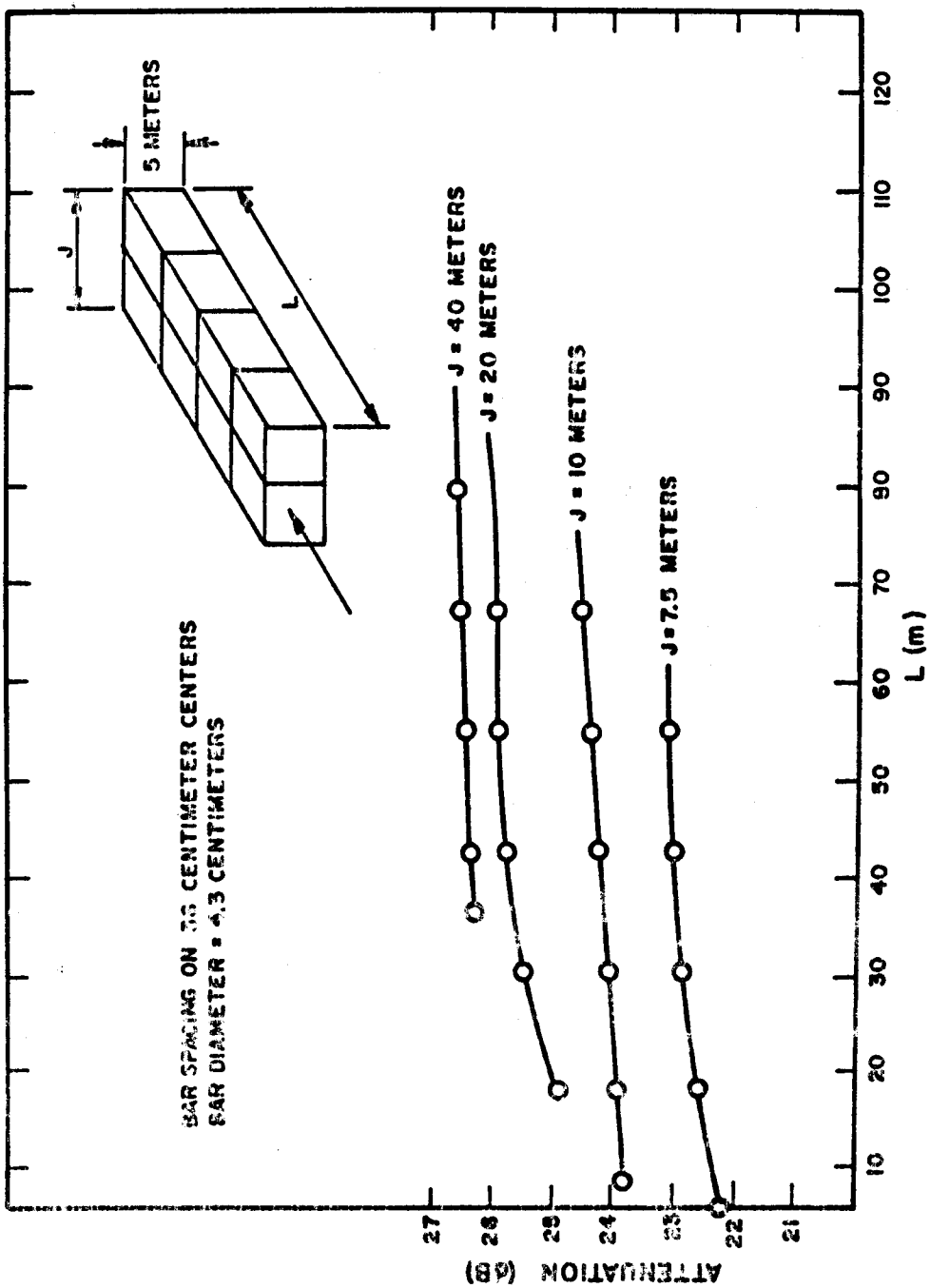

Figure 5-27. Center area attenuation of 5-meter-high, single-course reinforcing steel room. (Source: ref 5-7)

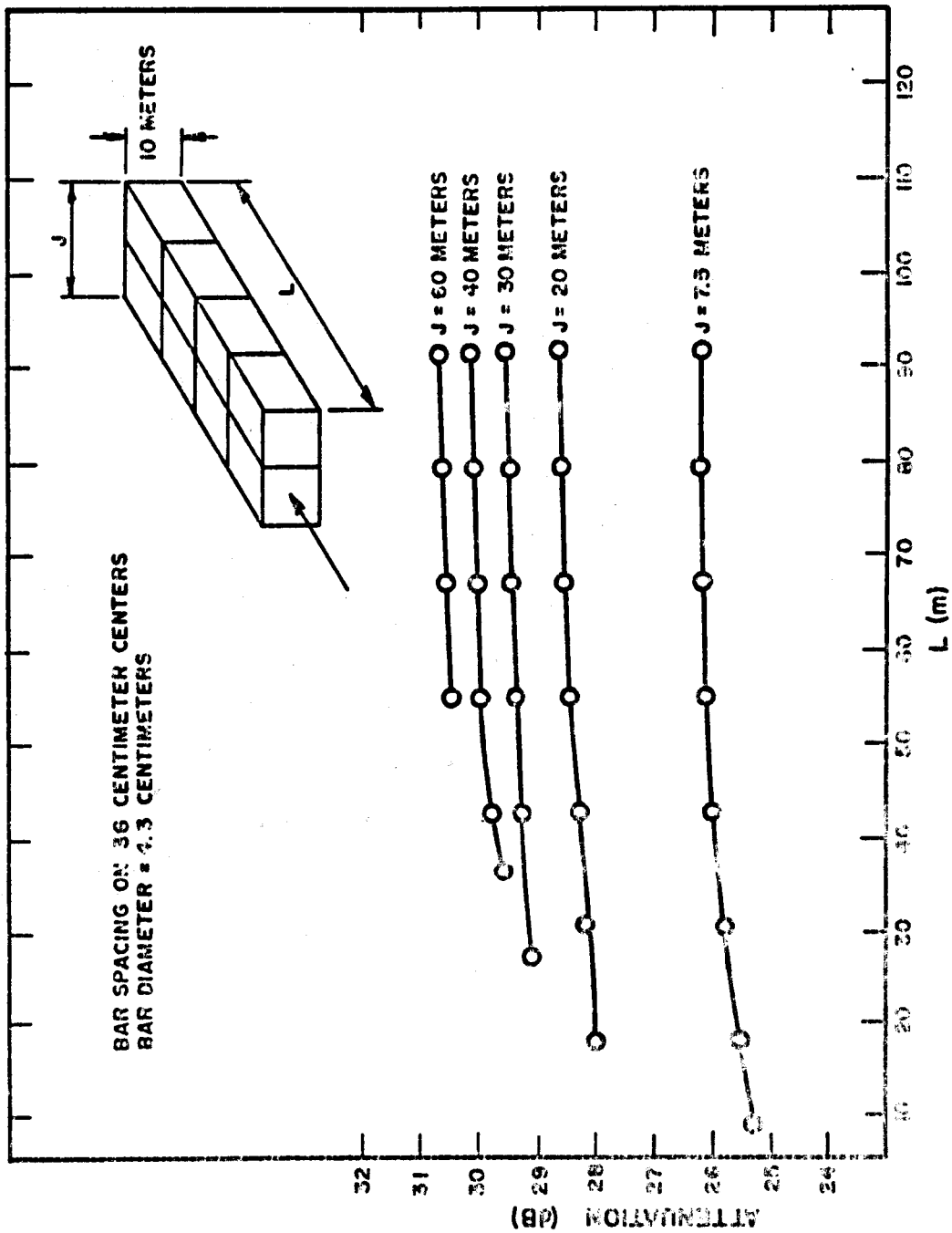

Figure 5-28. Center area attenuation of 10-meter-high, single-course reinforcing steel room. (Source: ref 5-7)

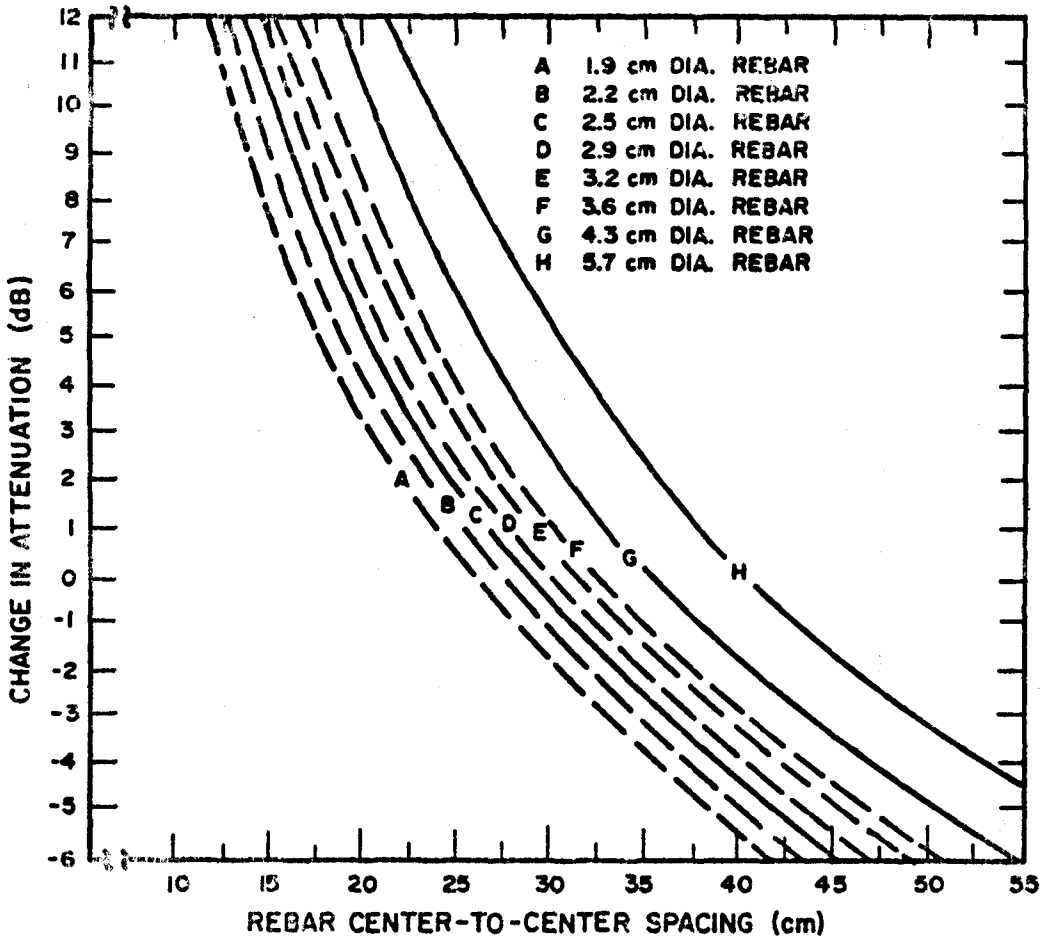

Figure 5-29. Correction curves for various rebar diameters and spacings using single-course rebar construction. (Source: ref 5-7)

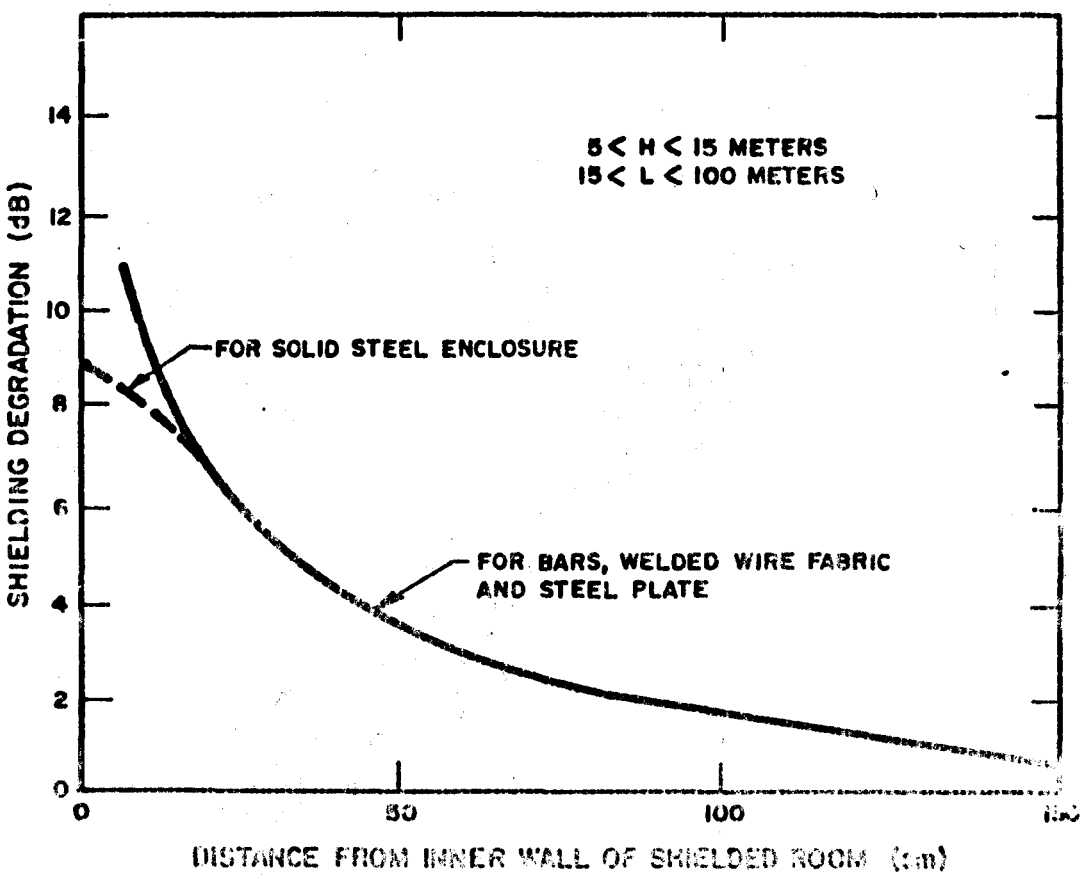

Figure 5-30. Shielding degradation versus distance from wall. (Source: ref 5-7)

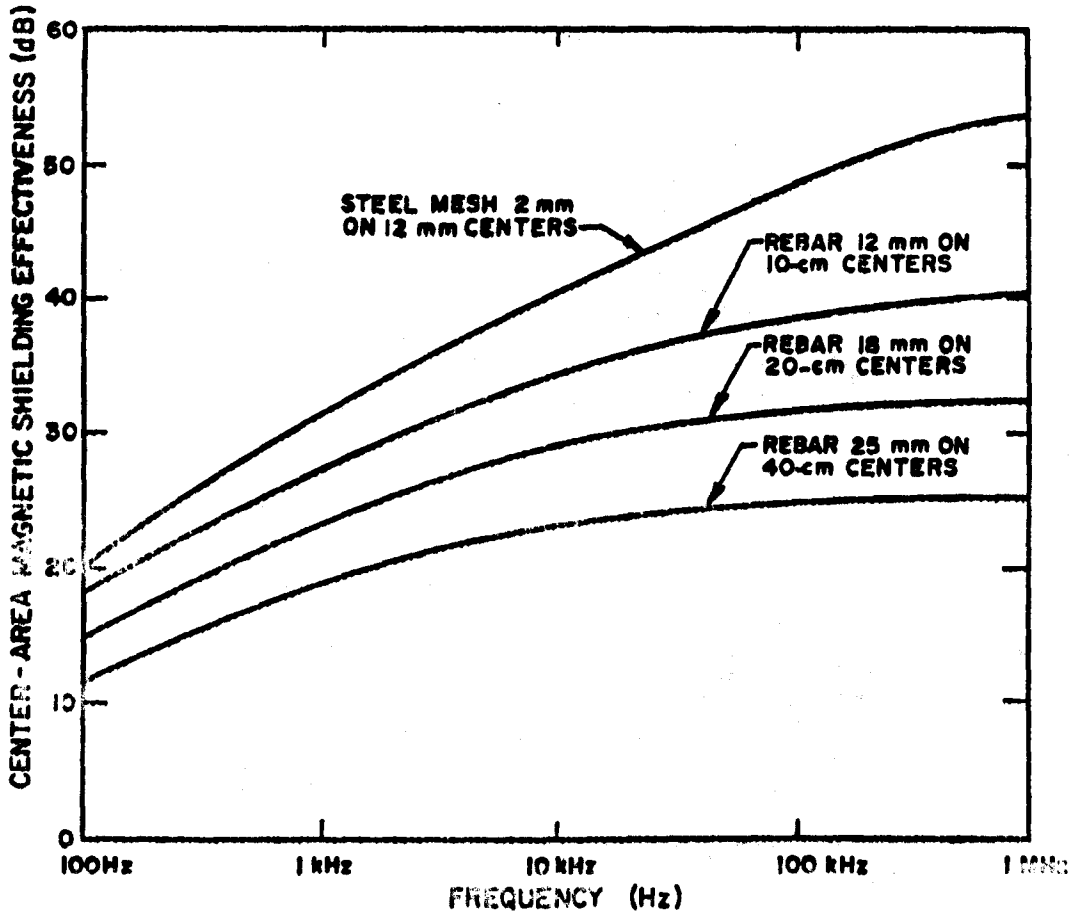

Figure 5-31. Shielding effectiveness of reinforcement steel. (Source: ref 5-7)

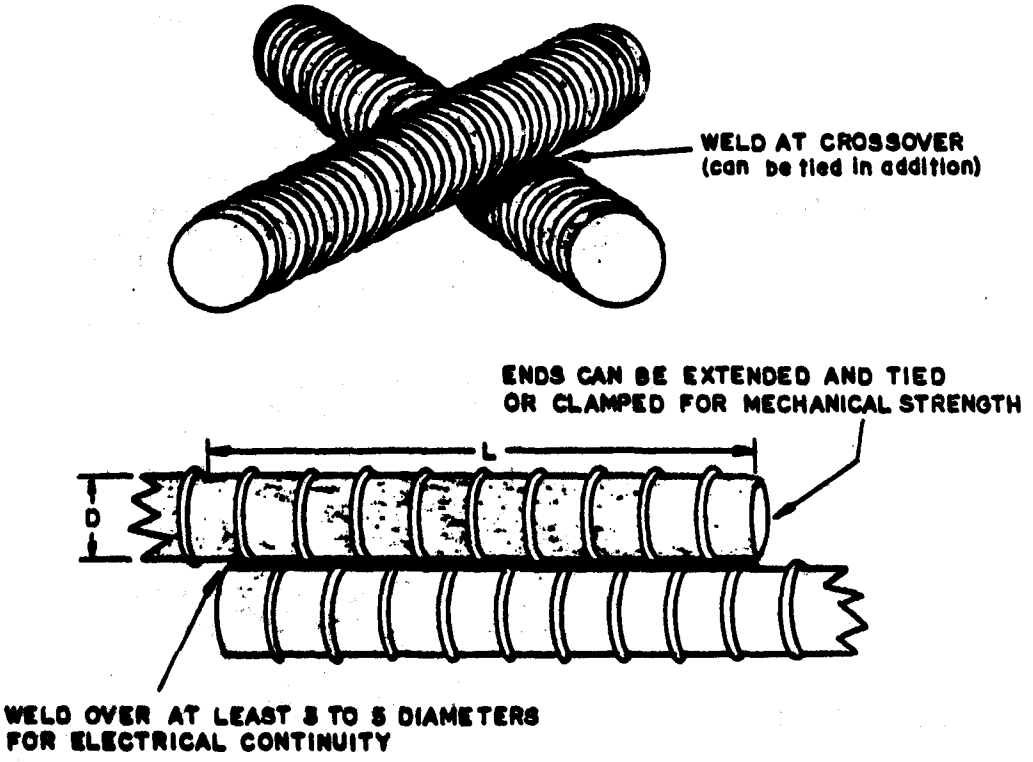

Figure 5-32. Reinforcement steel welding practice. (Source: ref 5-7)

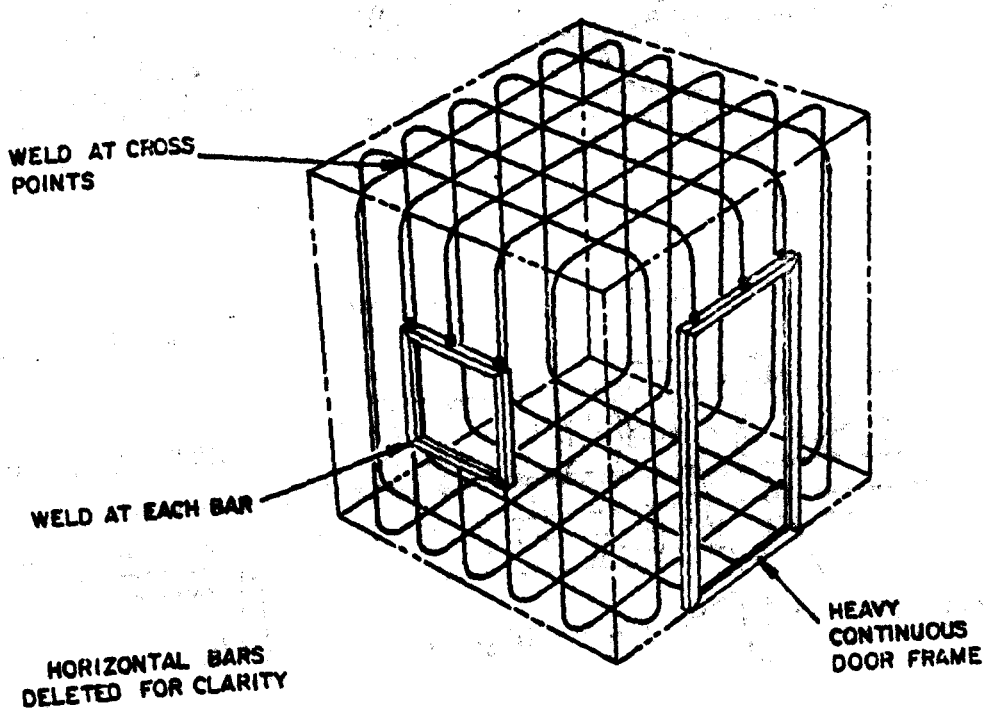

Figure 5-33. Schematic presentation--reinforcement steel shield. (Source: ref 5-7)

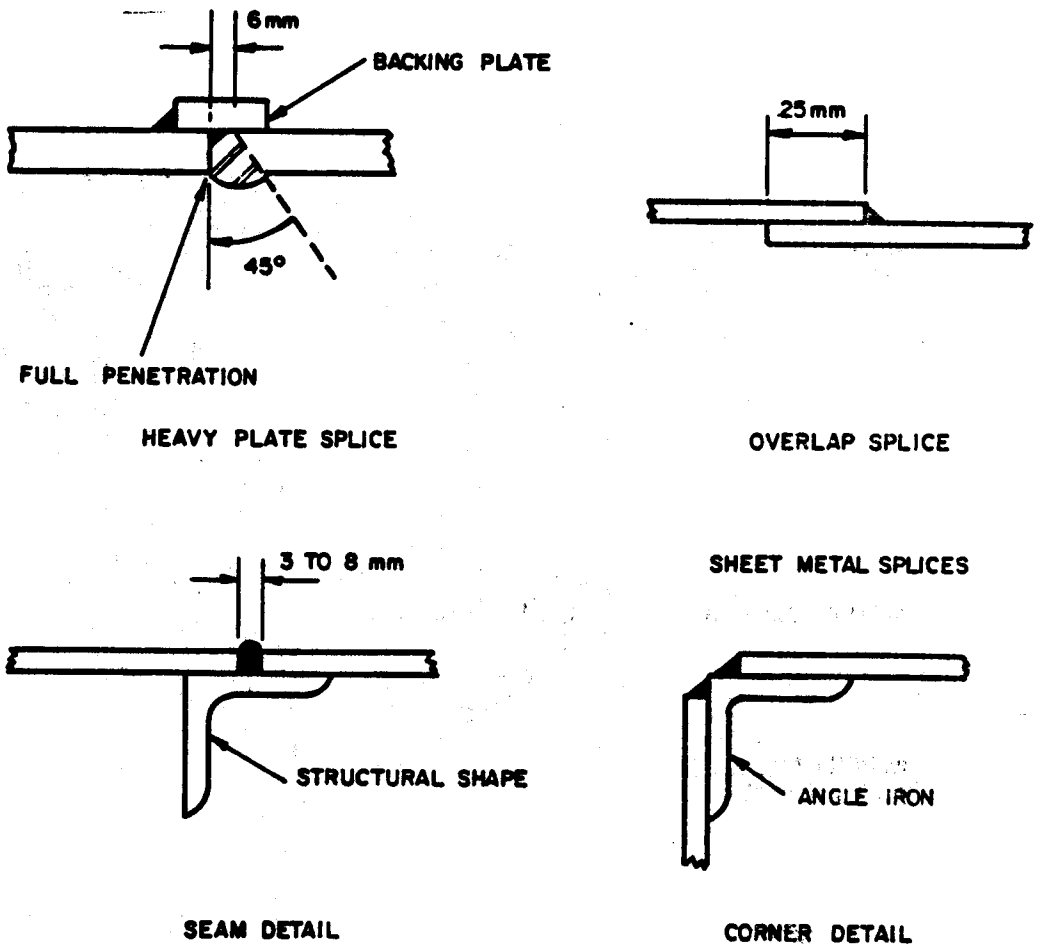

Figure 5-34. Weld joints for sheet steel shields. (Source: ref 5-7)

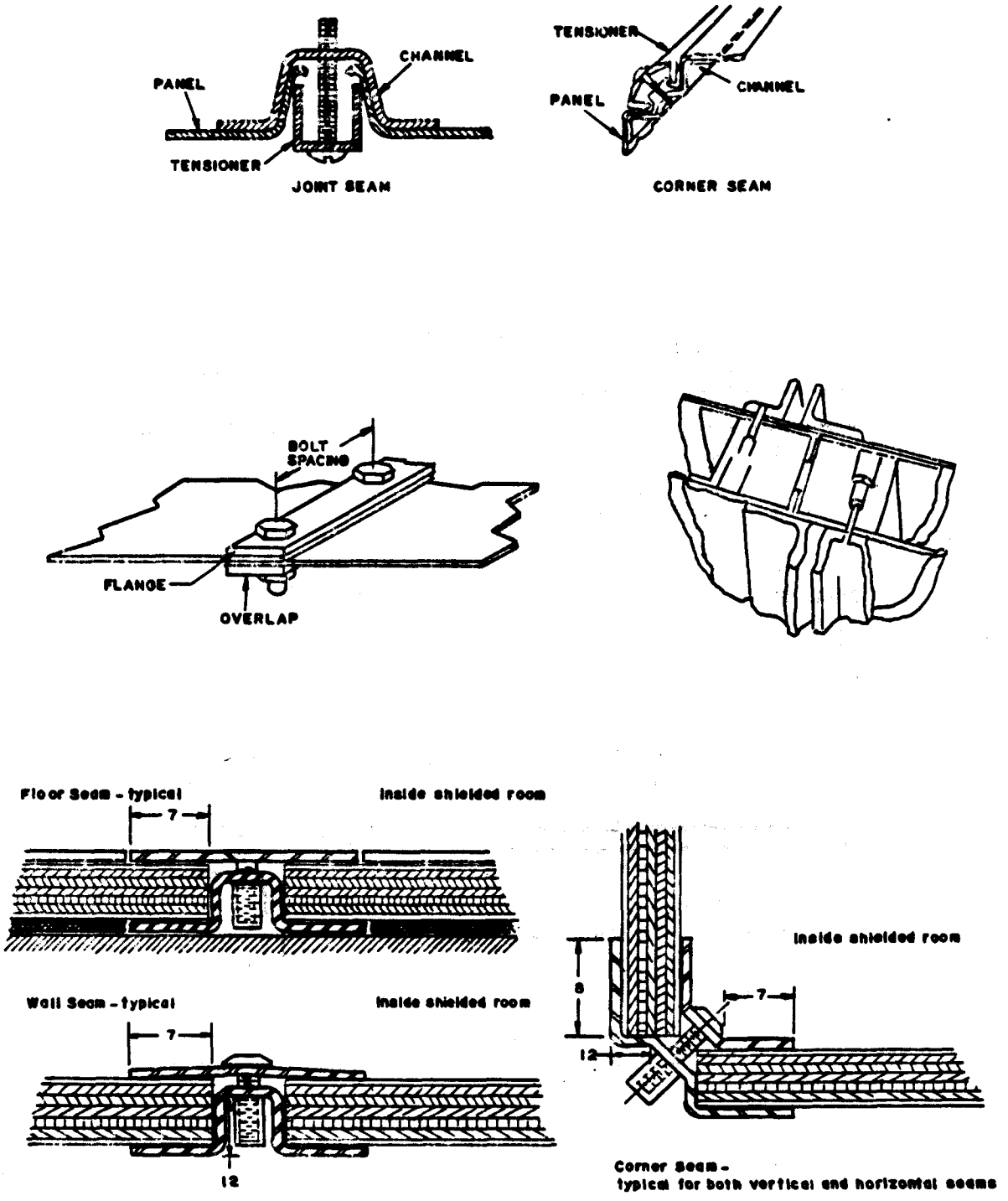

Figure 5-35. Bolted joints for metallic shields. (Source: ref 5-7)

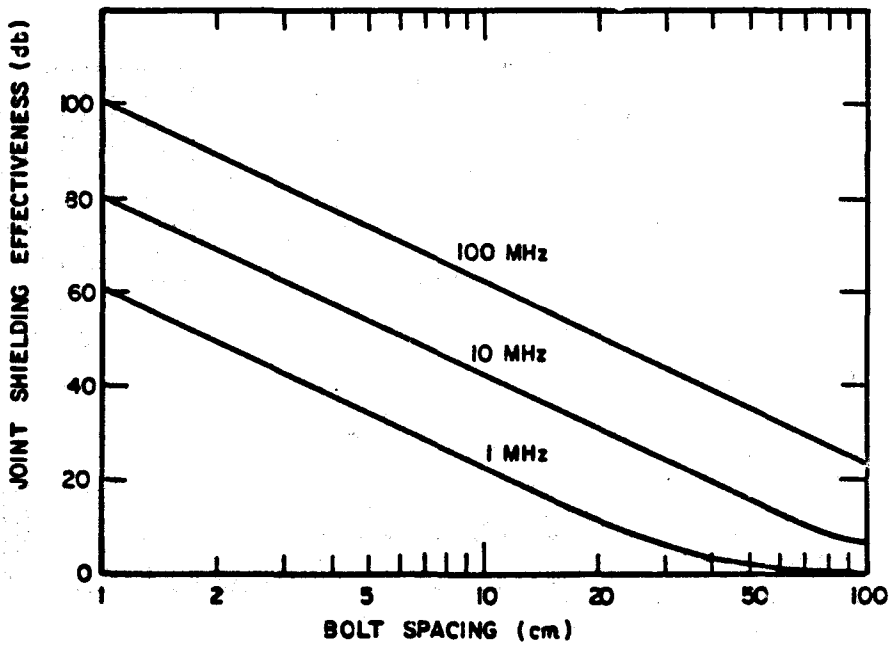

Figure 5-36. Shielding effectiveness for bolted joints. (Source: ref 5-7)

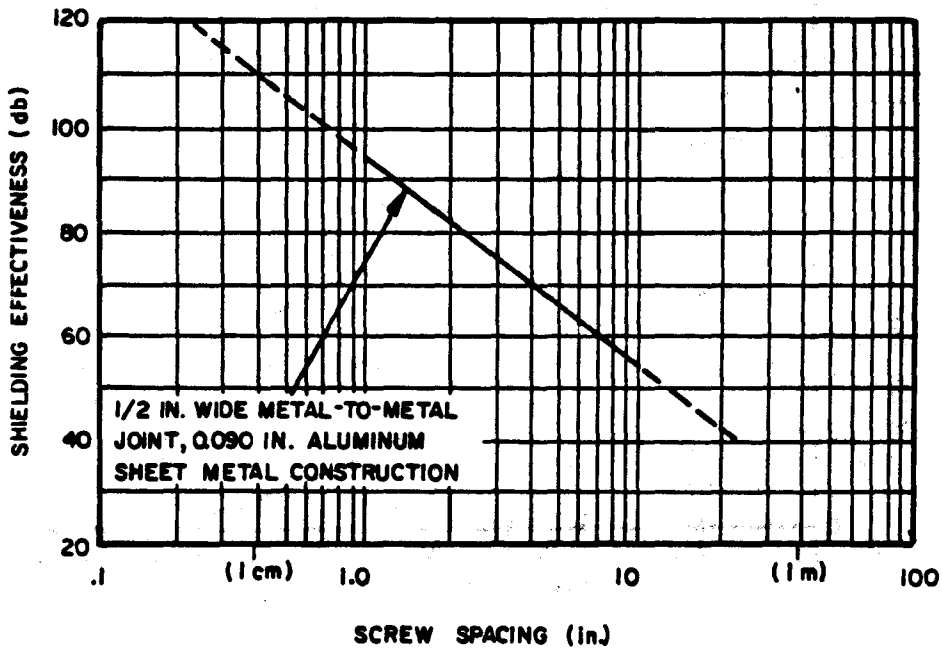

Figure 5-37. Influence of screw spacing on shielding effectiveness. (Source: ref 5-6)

Deflection	W Diam
.007 - .018	.070
.010 - .026	.103
.013 - .031	.125
.014 - .035	.139

Deflection	H
.006 - .012	.068
.008 - .016	.089
.012 - .024	.131
.014 - .029	.156
.016 - .032	.175

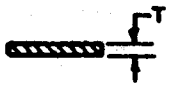

Deflection	T
.001 - .002	.020
.001 - .003	.032
.003 - .006	.062
.003 - .009	.093

Deflection	A
.025 - .080	.200
.030 - .125	.250
.075 - .250	.360

Figure 5-38. Gasket deflection limits (in inches). (Source: ref 5-30)

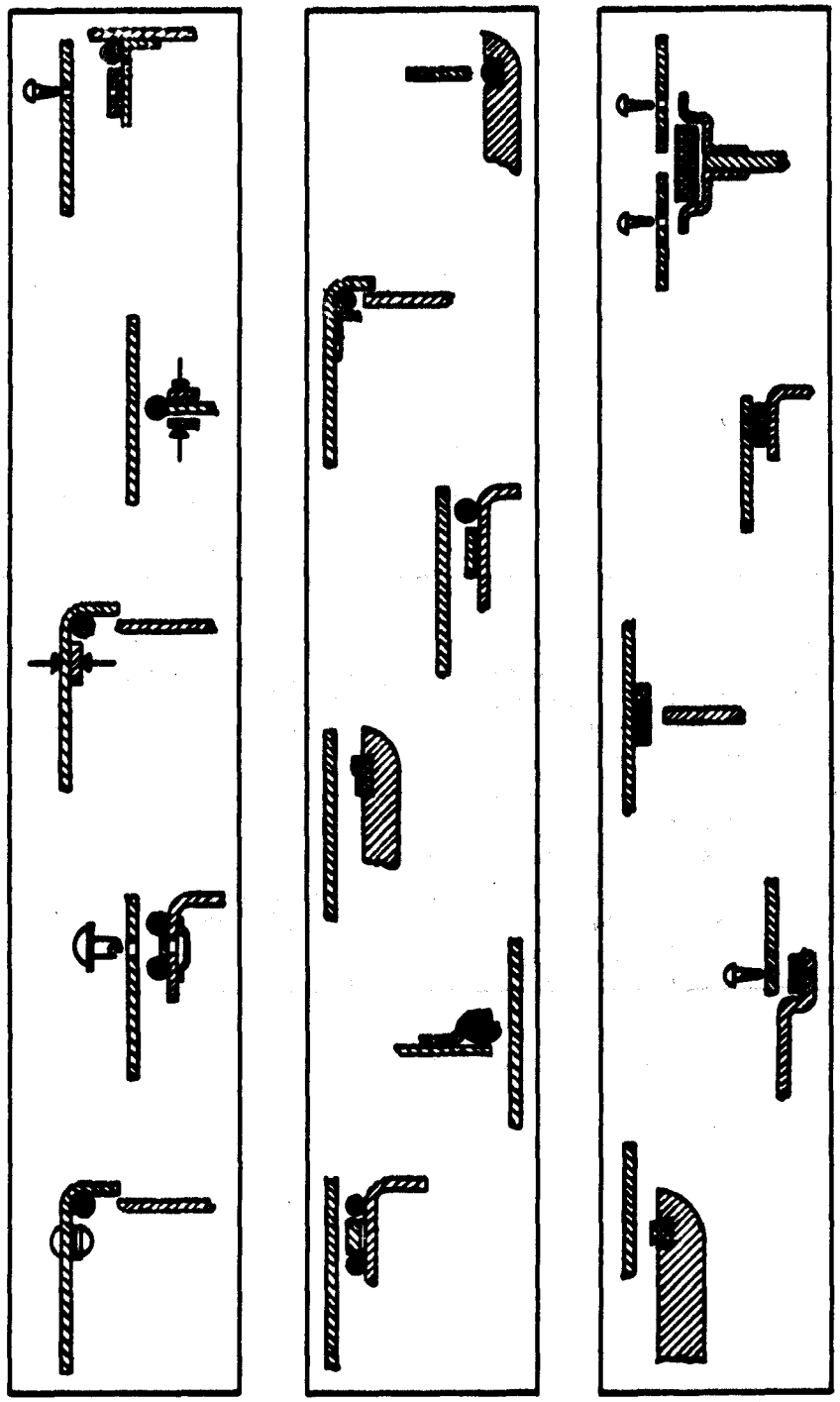

Figure 5-39. Typical mounting techniques for RF gaskets. (Source: ref 5-6)

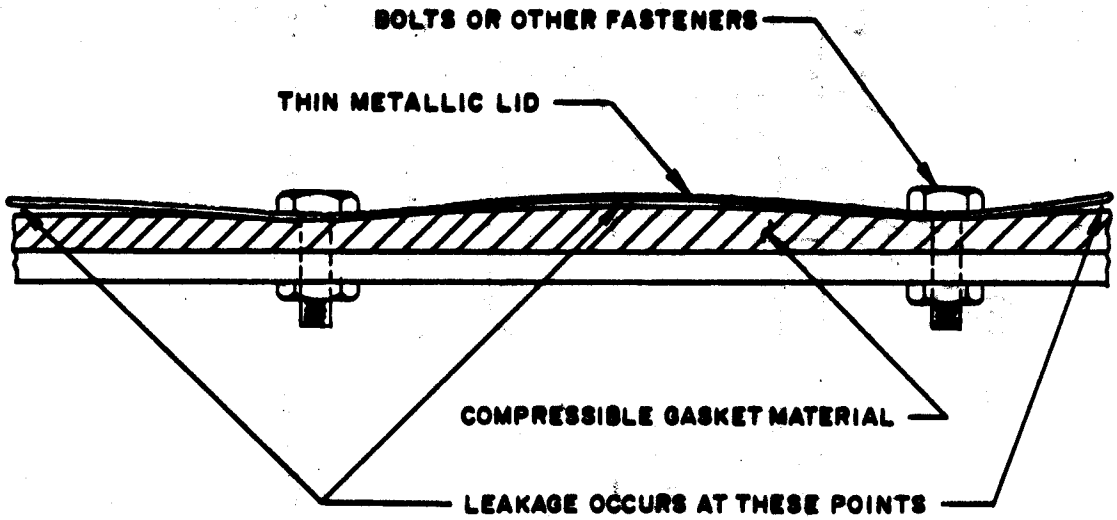

NOTE: VIEW PURPOSELY EXAGGERATED TO DEMONSTRATE IMPERFECT SEAL CONDITIONS.

Figure 5-40. Improper gasket application. (Source: ref 5-3)

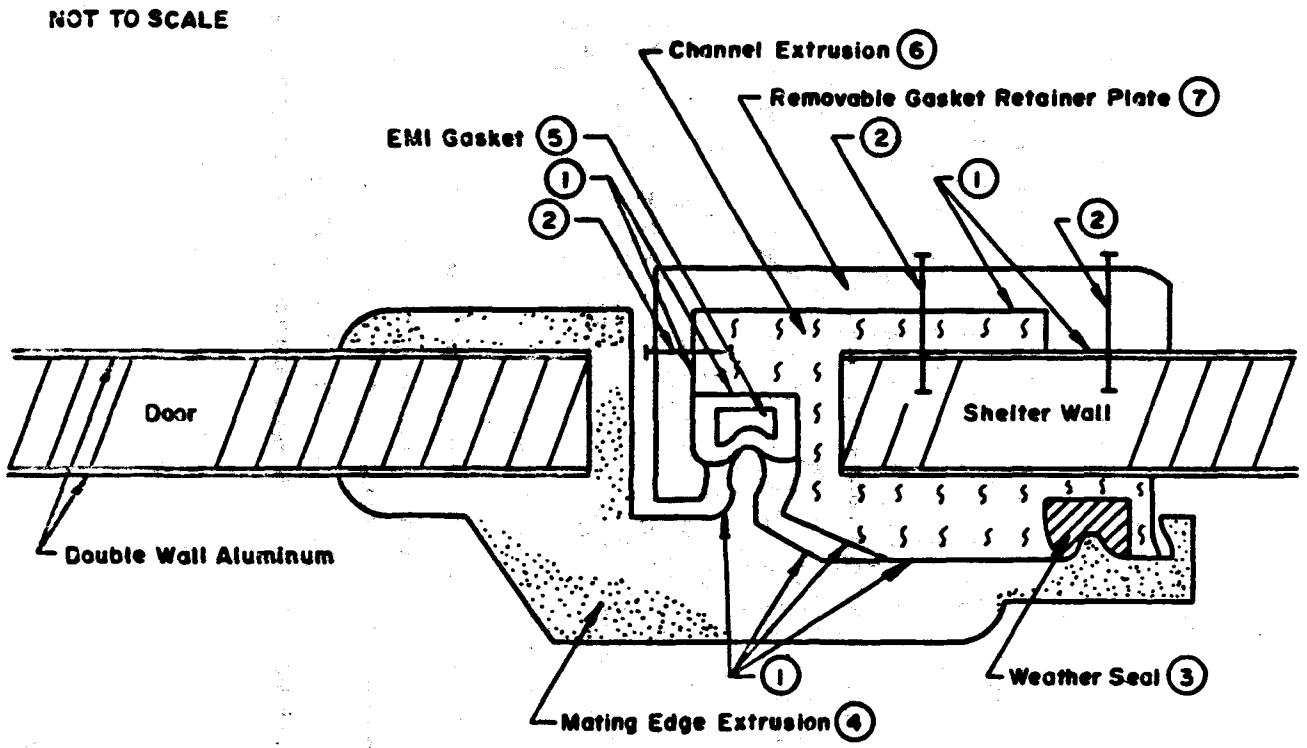

1 = Surfaces with Tin Coating or Plating

2 = Bolts or Screws to Affix Retainer Plate

3 = Silicone, Hollow Extrusion Elastomer

4 = Aluminum Extrusion Welded to Door

5 = Knitted Wire Mesh Gasket with Hollow "D" Elastomer

6 = Aluminum Extrusion Welded to Shelter Wall

7 = Aluminum Extrusion Plate Bolted to Channel Extrusion

Figure 5-41. EMI shielded door seam (mesh gasket). (Source: ref 5-8)

NOT TO SCALE

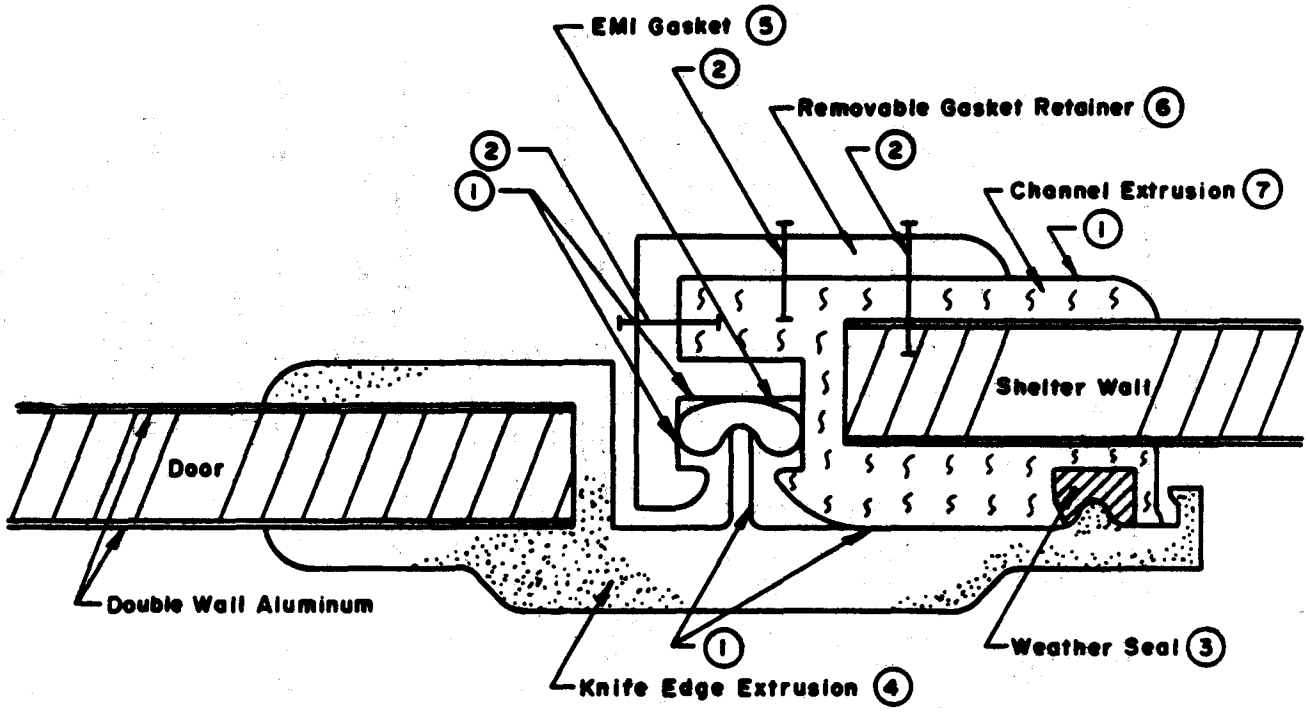

① = Surfaces with Tin Coating or Plating

② = Bolts or Screws to Affix Retainer Plate

③ = Silicone, Hollow Extruded Elastomer

④ = Aluminum Extrusion Welded to Door

⑤ = Tin-Plated Spiral "OVAL" Gasket

⑥ = Tin-Plated Aluminum Extrusion Gasket Retainer

⑦ = Aluminum Extrusion Welded to Shelter

Figure 5-42. EMI shielded door seam ("oval" spiral gasket). (Source: ref 5-8)

NOT TO SCALE

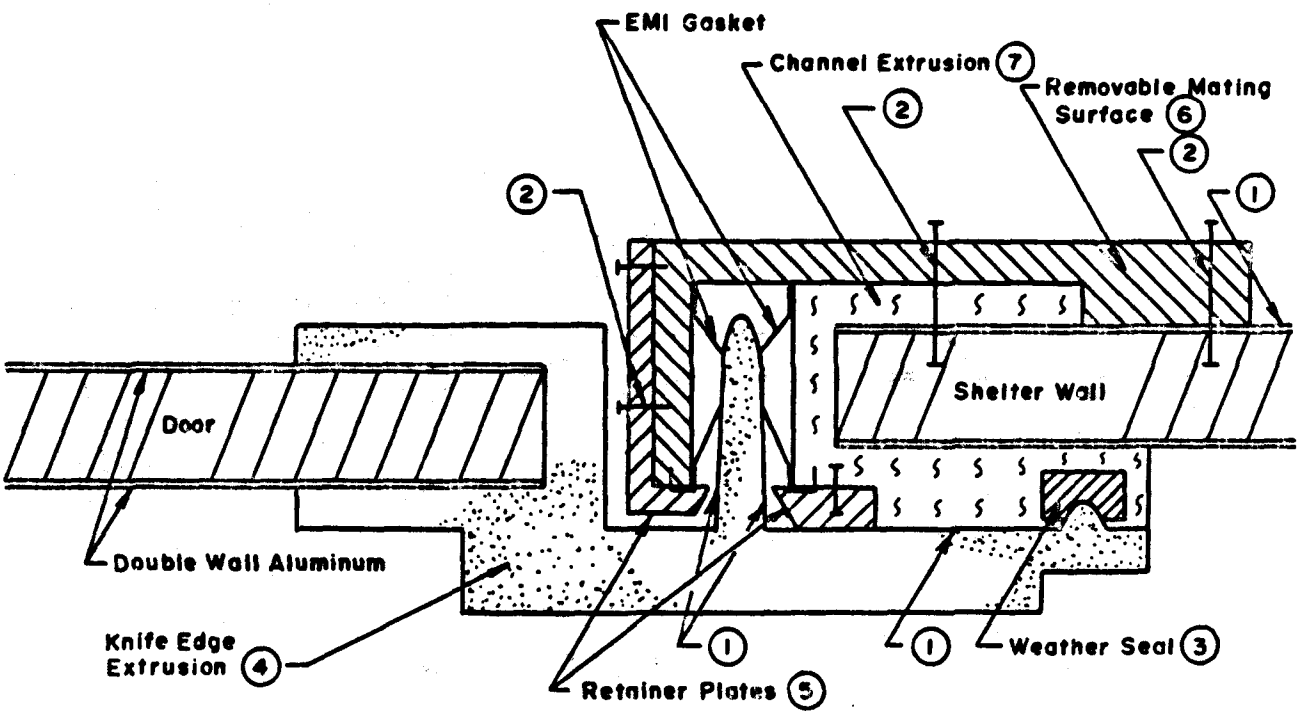

1 = Surfaces with Tin Coating or Plating

2 = Bolts or Screws to Affix Retainer Plates

3 = Silicone, Hollow Extrusion Elastomer

4 = Aluminum Extrusion Welded to Door

5 = Tin-Plated Aluminum Retainer Plates

6 = Aluminum Extrusion Bolted to Shelter (Removable)

7 = Aluminum Extrusion Welded to Shelter

Figure 5-43. EMI shielded door seam (fingerstock). (Source: ref 5-8)

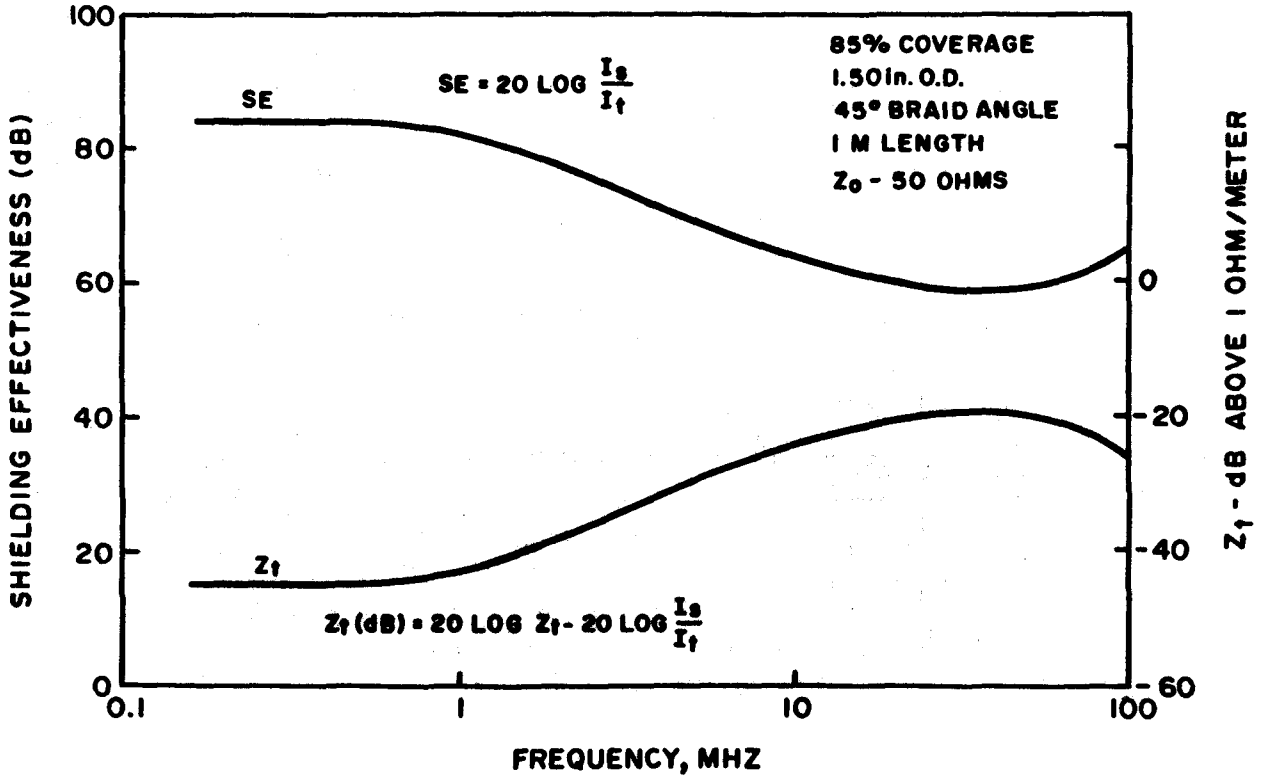

Figure 5-44. Shielding effectiveness and transfer impedance. (Source: ref 5-11)

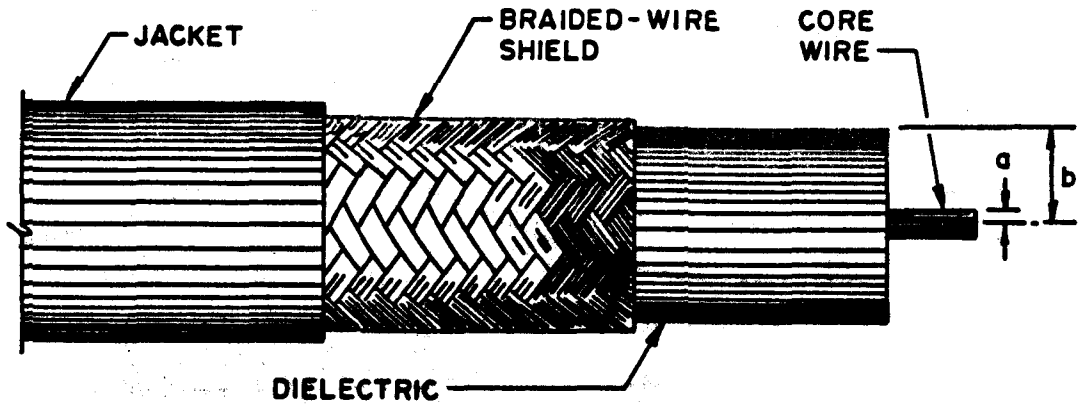

Figure 5-45. A braided-shield coaxial cable. (Source: ref 5-16)

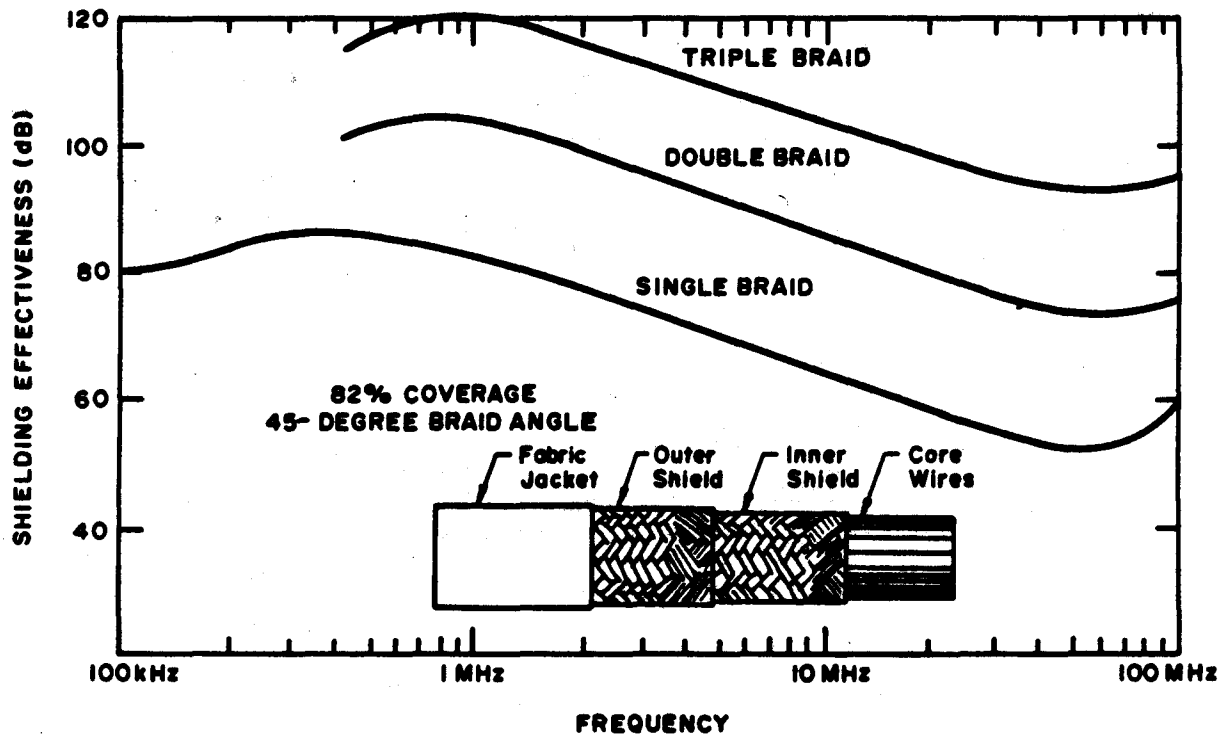

Figure 5-46. Cable shielding effectiveness with number of braid layers. (Source: ref 5-7)

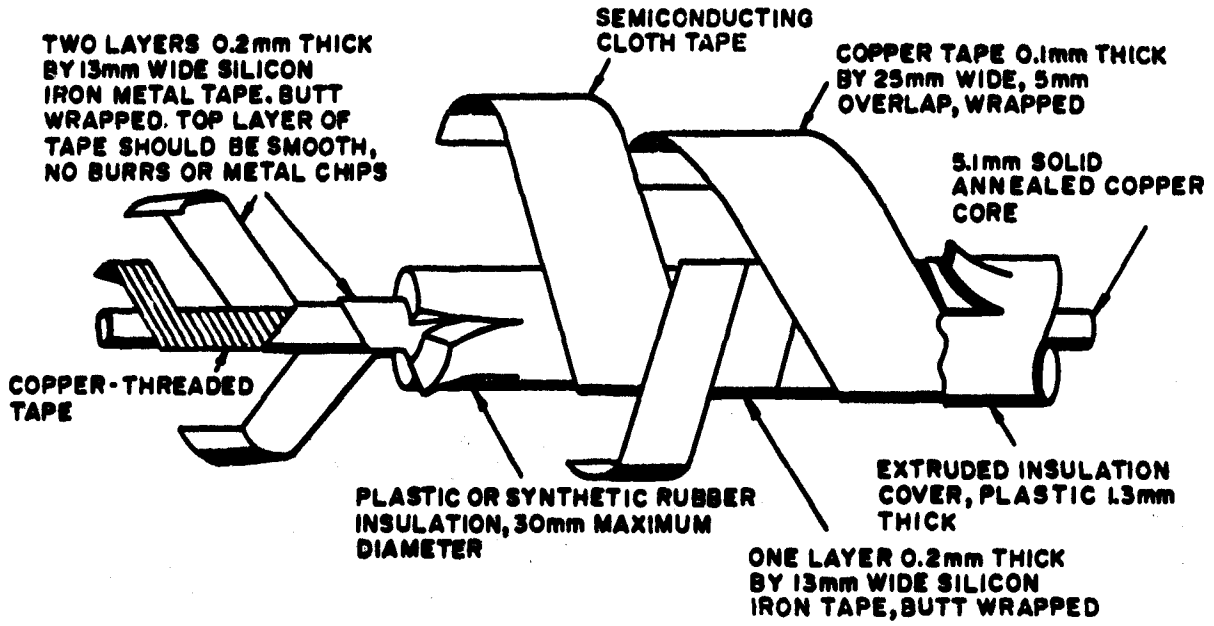

UNDERGROUND CABLE

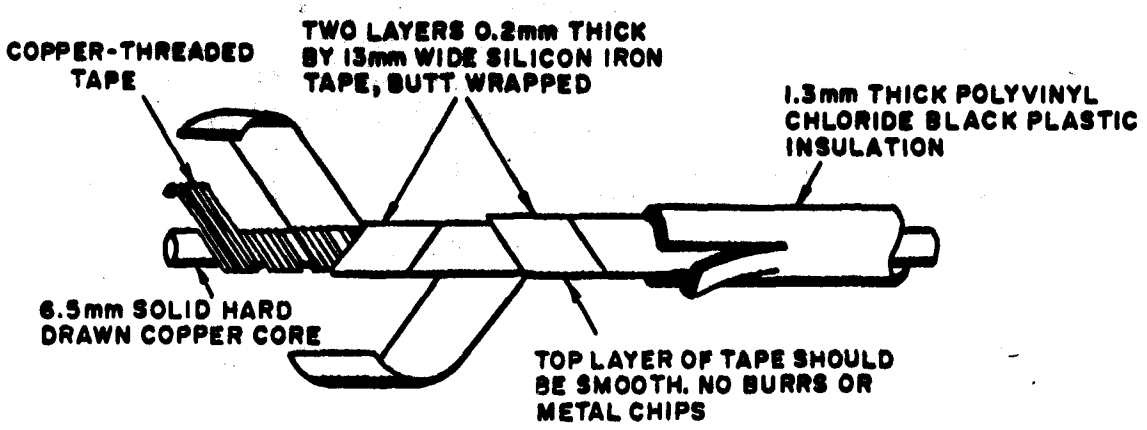

OVERHEAD CONDUCTOR

Figure 5-47. Lossy conductor construction. (Source: ref 5-7)

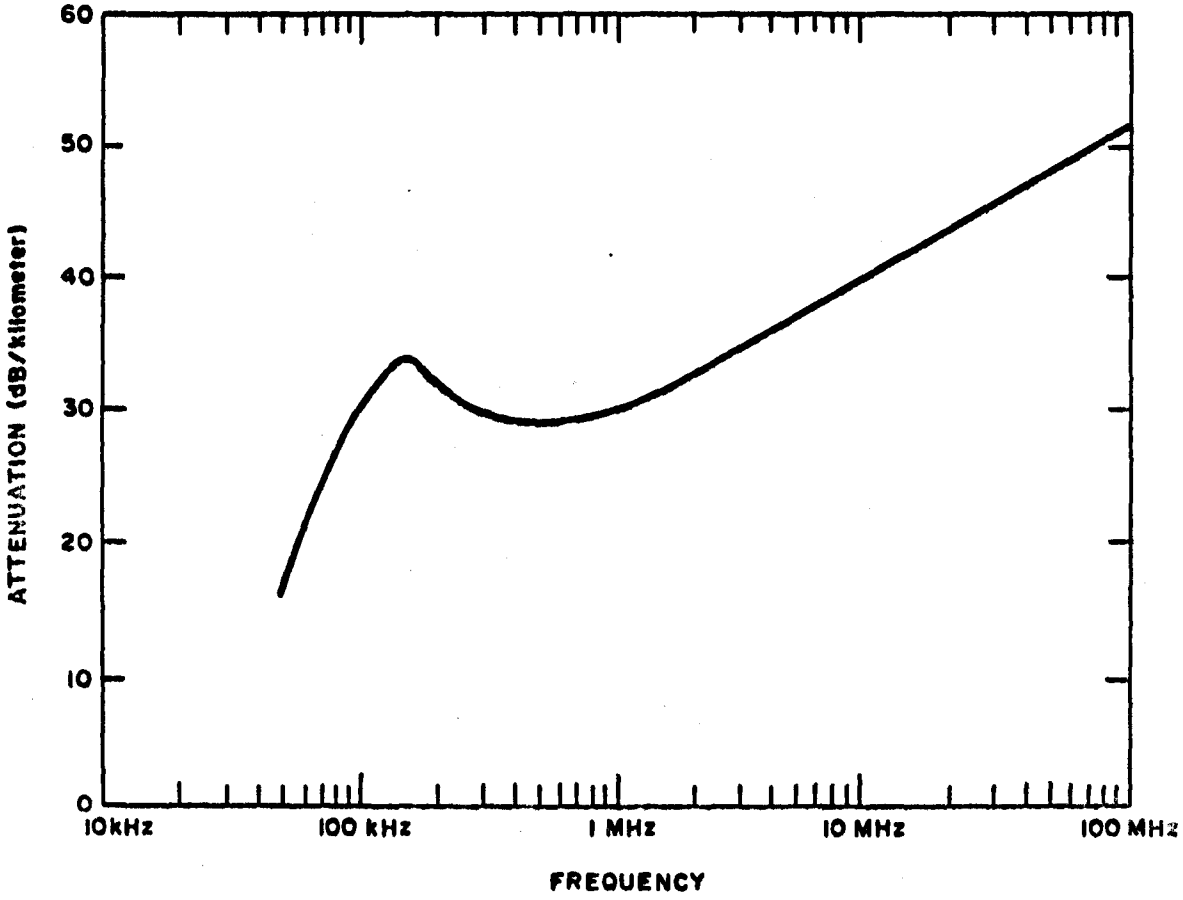

Figure 5-48. Attenuation of HEMP interference propagating on lossy-wrapped conductors. (Source: ref 5-7)

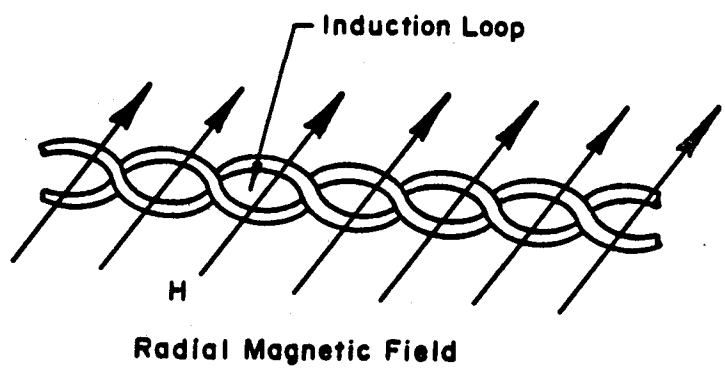

Figure 5-49. Induction loop area for twisted pair cables. (Source: ref 5-16)

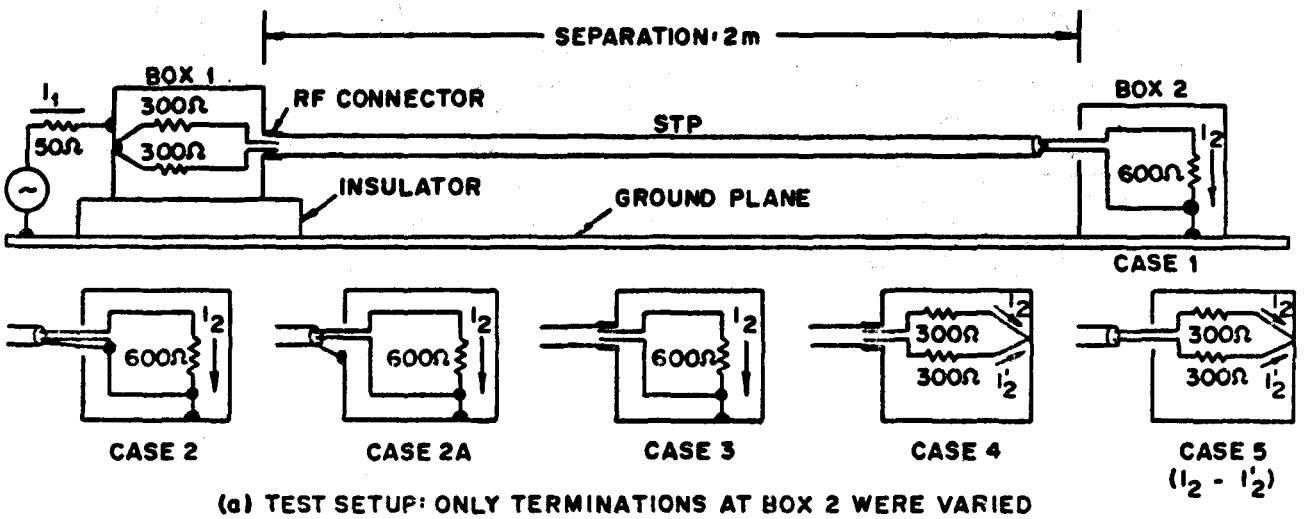

(a) TEST SETUP: ONLY TERMINATIONS AT BOX 2 WERE VARIED

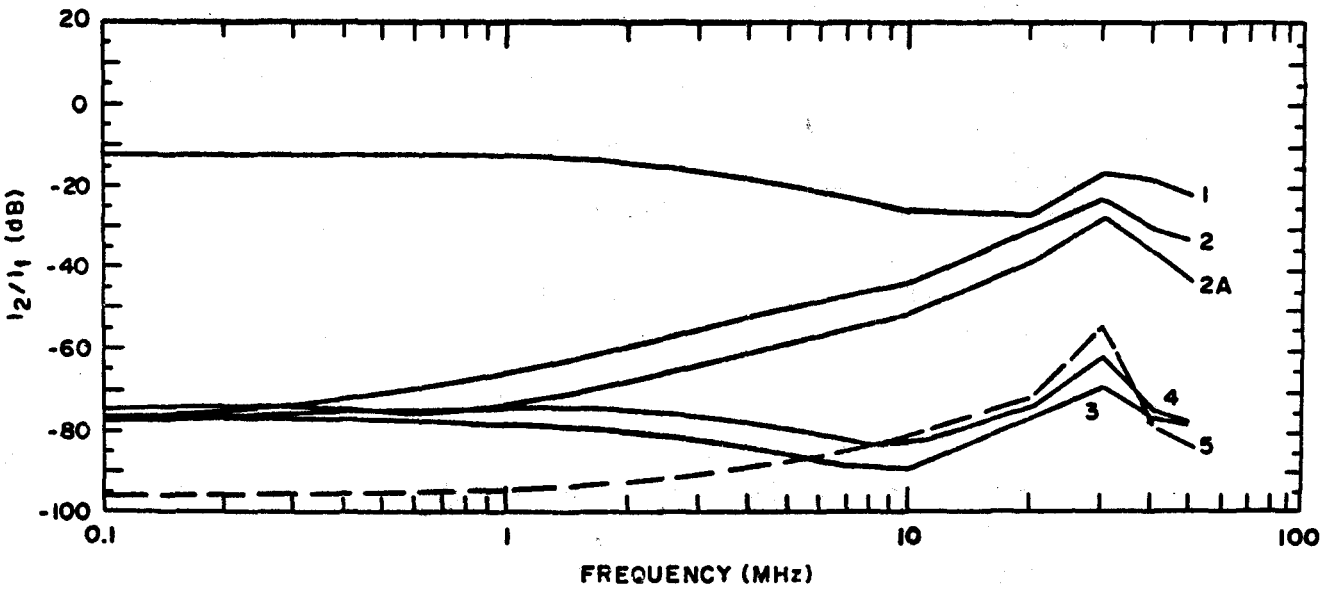

(1) NO SHIELD TERMINATION
(2) PIGTAIL, INSIDE
(2A) PIGTAIL, OUTSIDE
(3) RF CONNECTOR, UNBALANCED
(4) RF CONNECTOR, BALANCED
(5) NORMALIZED DIFFERENTIAL CURRENT (no shield termination)

(b) NORMALIZED CURRENT I_2 (curve 5 shows the normalized differential current I_2 I'_2)

Figure 5-50. Experiments with shielded twisted pair cabling. (Source: ref 5-14)

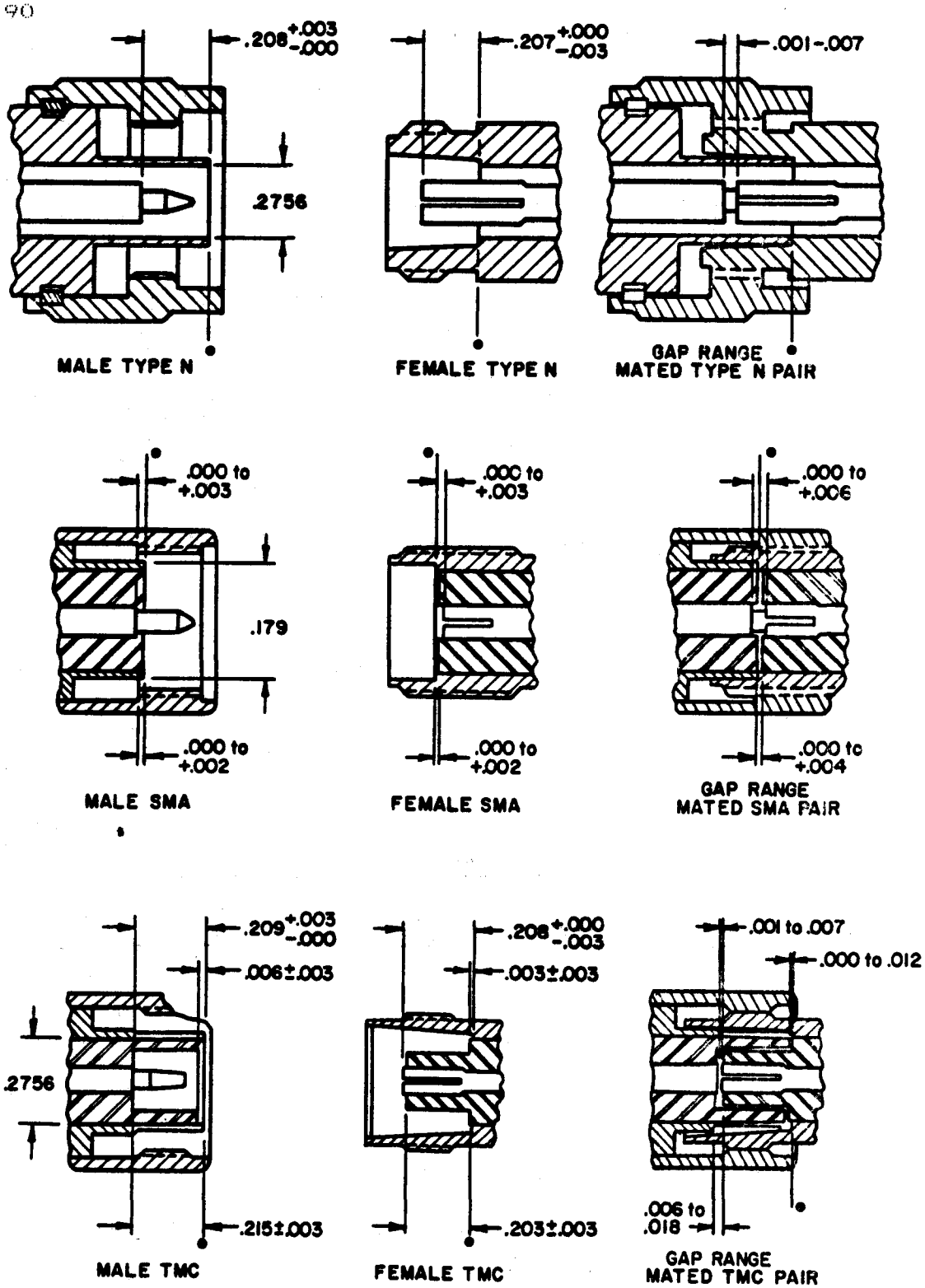

Figure 5-51. Construction of some popular coaxial connectors. (Source: ref 5-16)

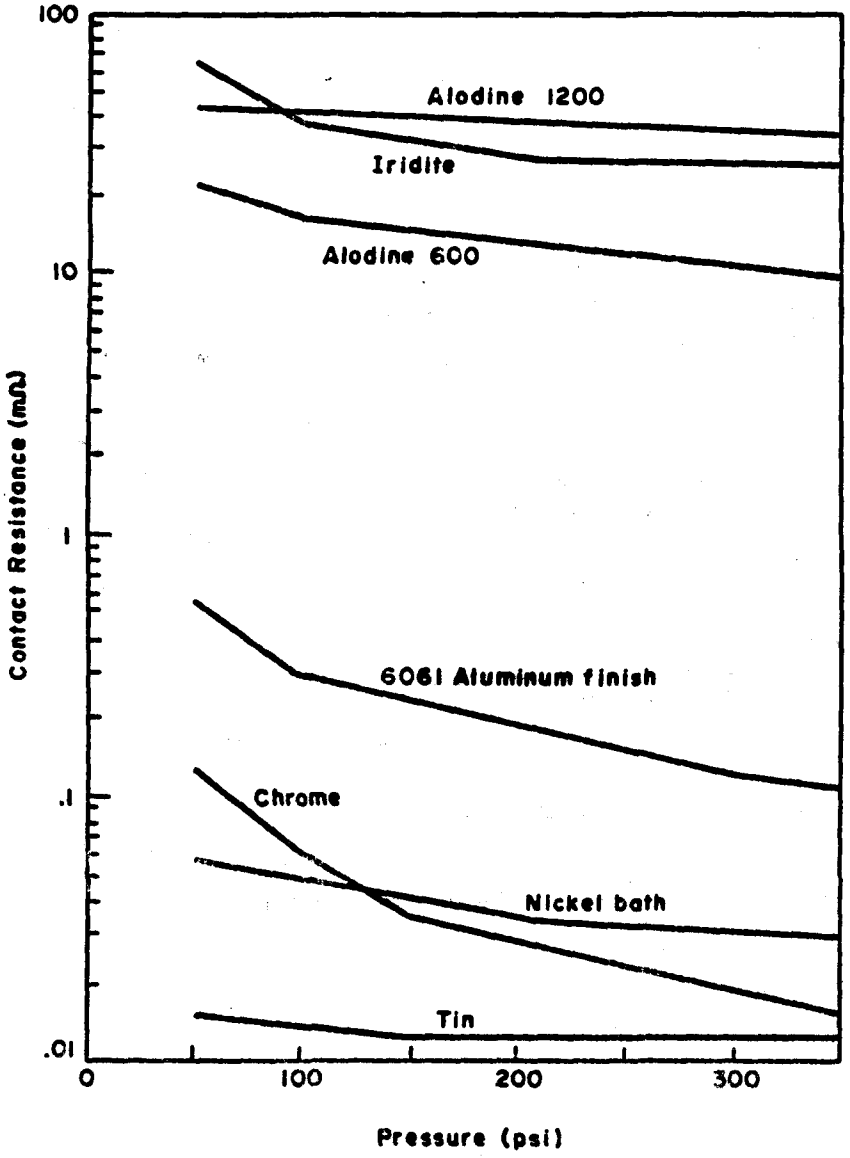

Figure 5-52. Contact resistance of conductive coatings on aluminum. (Source: ref 5-16)

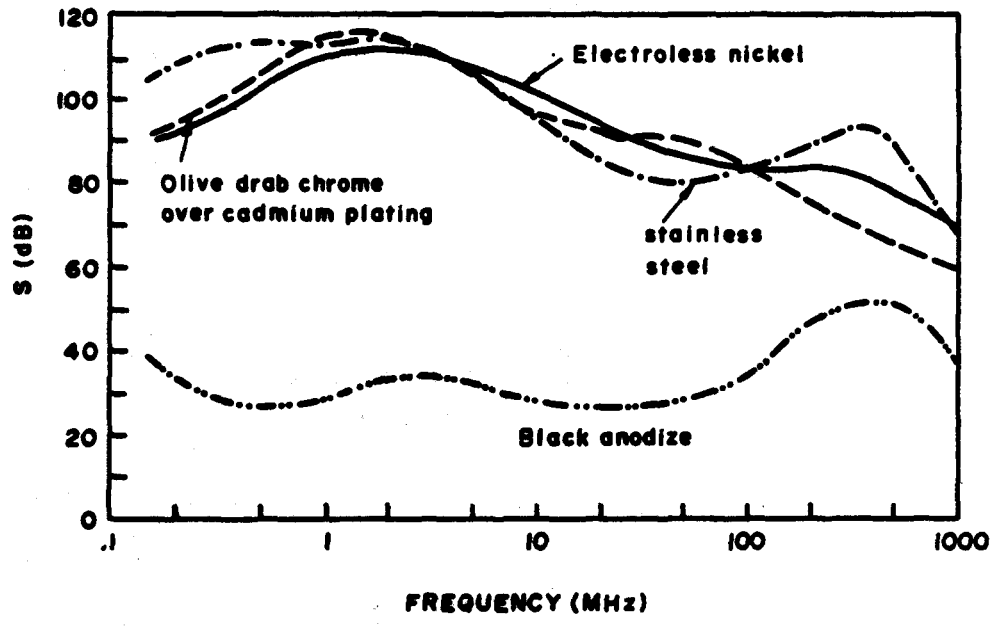

Figure 5-53. Shielding effectiveness of connectors with various finishes. (Source: ref 5-16)

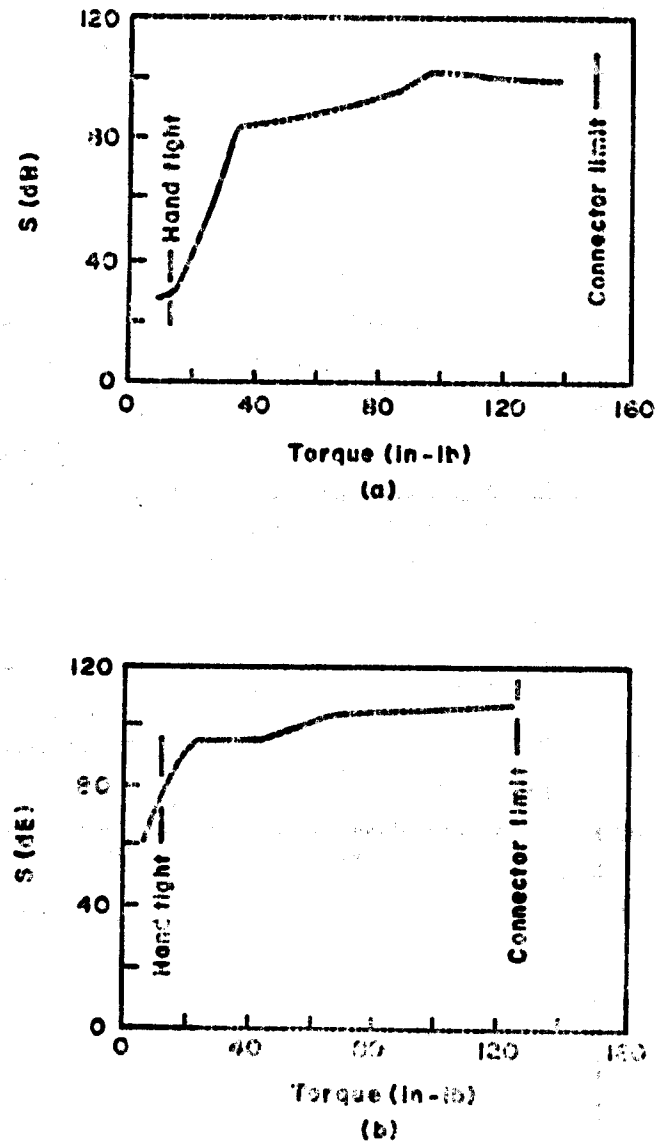

Figure 5-54. Effect of tightening torque on shielding effectiveness during vibration. (Source: ref 5-16)

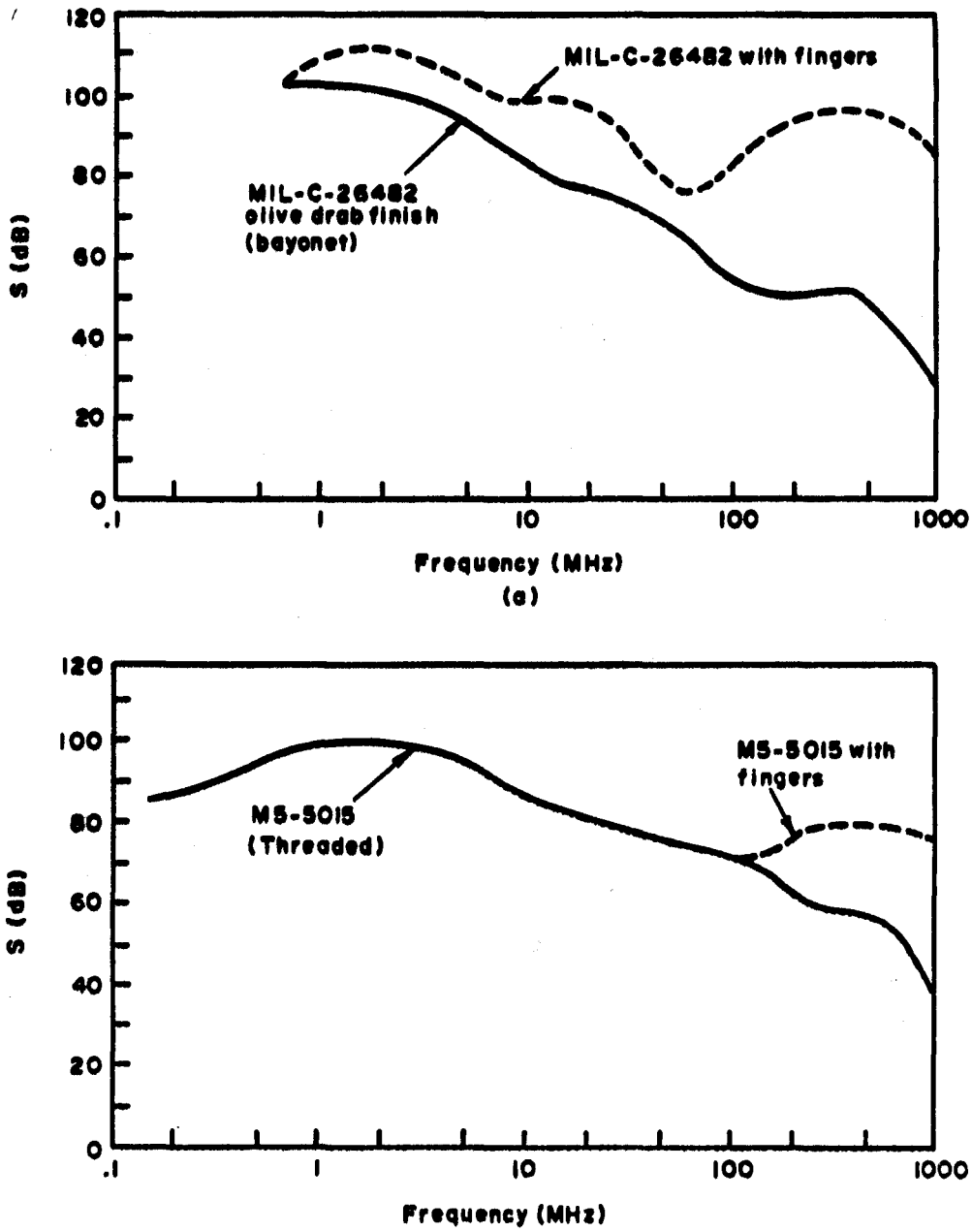

Figure 5-55. Effect of added spring fingers on shielding effectiveness. (Source: ref 5-16)

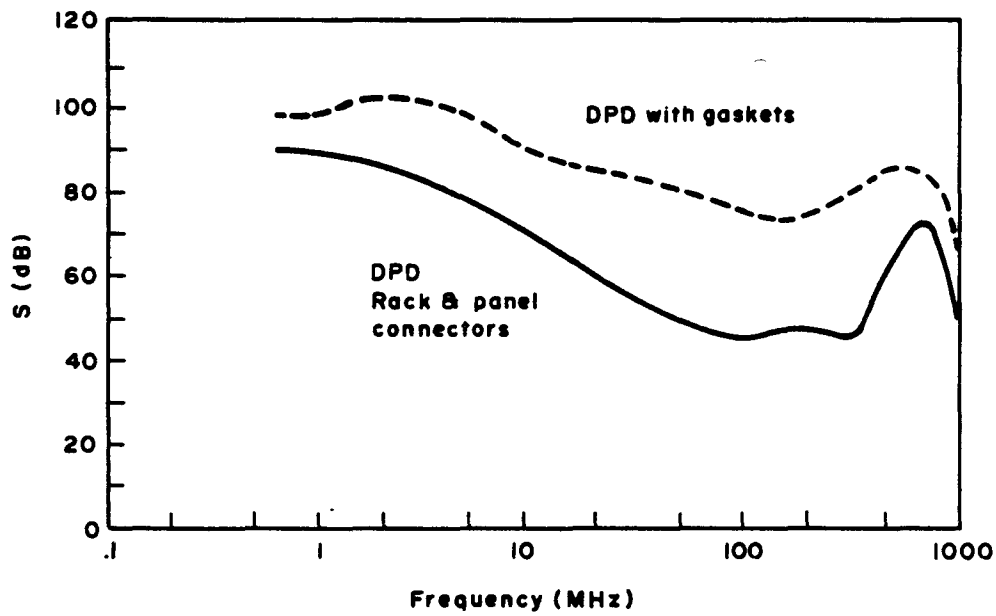

Figure 5-56. Effect of adding shielding gaskets on connector shielding effectiveness. (Source: ref 5-16)

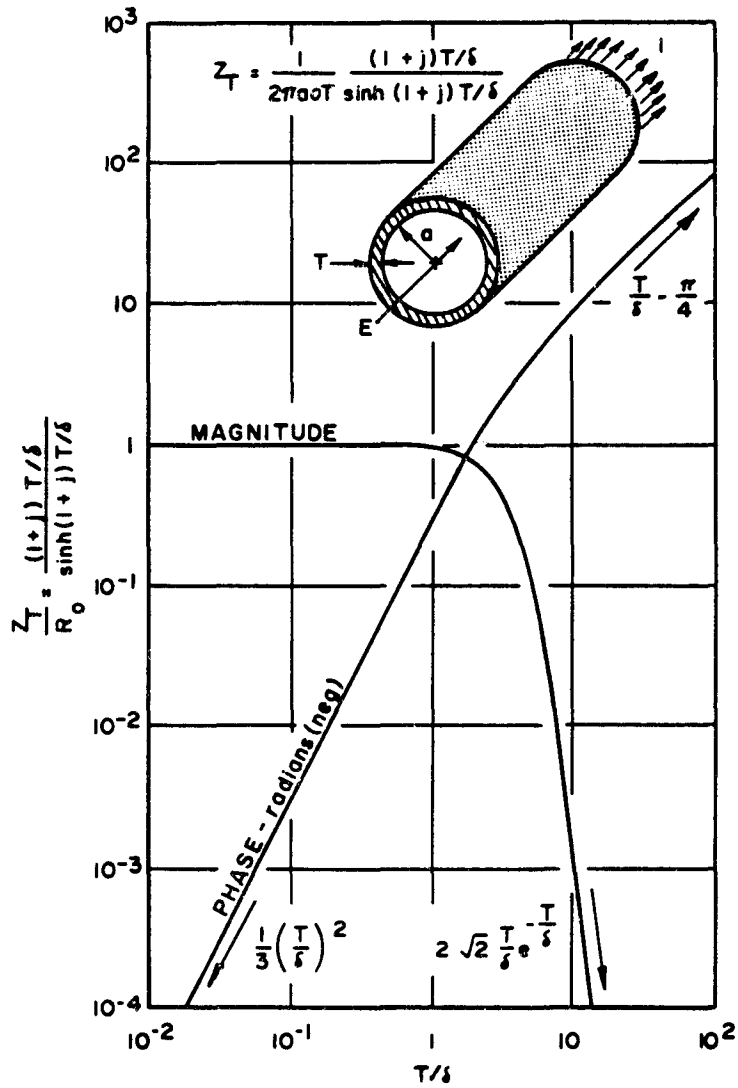

Figure 5-57. Normalized transfer impedance for solid cylindrical shields. (Source: ref 5-31)

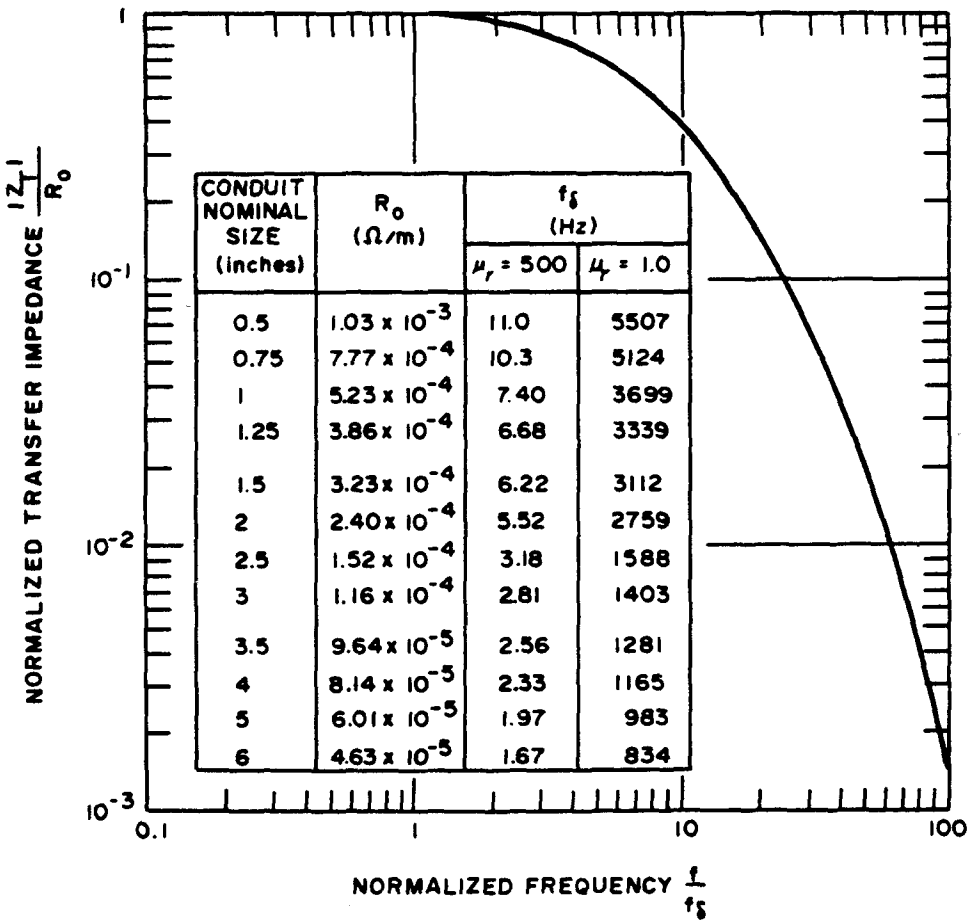

CONDUIT NOMINAL SIZE (inches)	R_o (Ω/m)	f_δ (Hz)	
		$\mu_r = 500$	$\mu_r = 1.0$
0.5	1.03×10^{-3}	11.0	5507
0.75	7.77×10^{-4}	10.3	5124
1	5.23×10^{-4}	7.40	3699
1.25	3.86×10^{-4}	6.68	3339
1.5	3.23×10^{-4}	6.22	3112
2	2.40×10^{-4}	5.52	2759
2.5	1.52×10^{-4}	3.18	1588
3	1.16×10^{-4}	2.81	1403
3.5	9.64×10^{-5}	2.56	1281
4	8.14×10^{-5}	2.33	1165
5	6.01×10^{-5}	1.97	983
6	4.63×10^{-5}	1.67	834

Figure 5-58. Magnitude of the transfer impedance of rigid steel conduit. (Source: ref 5-31)

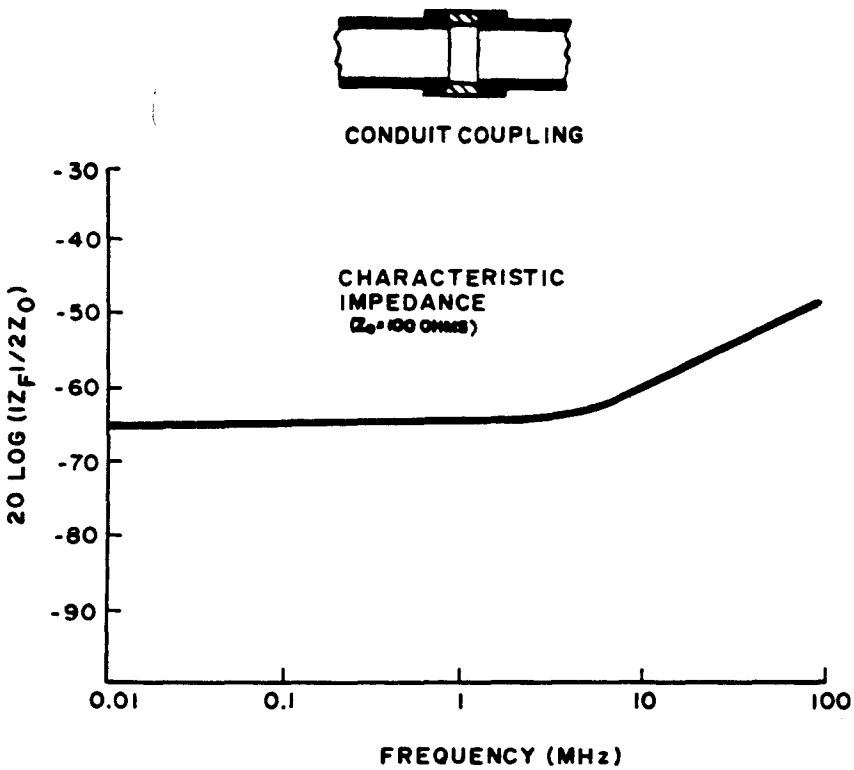

Figure 5-59. Flaw impedance (Z_F) of typical coupling. (Source: ref 5-17)

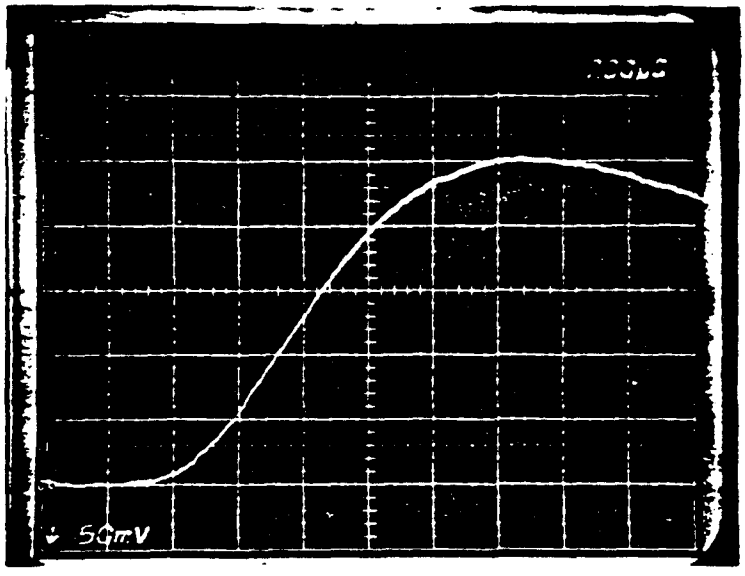

(a) Vertical: 1000 x 50 mV/div
Horizontal: 200 µsec/div

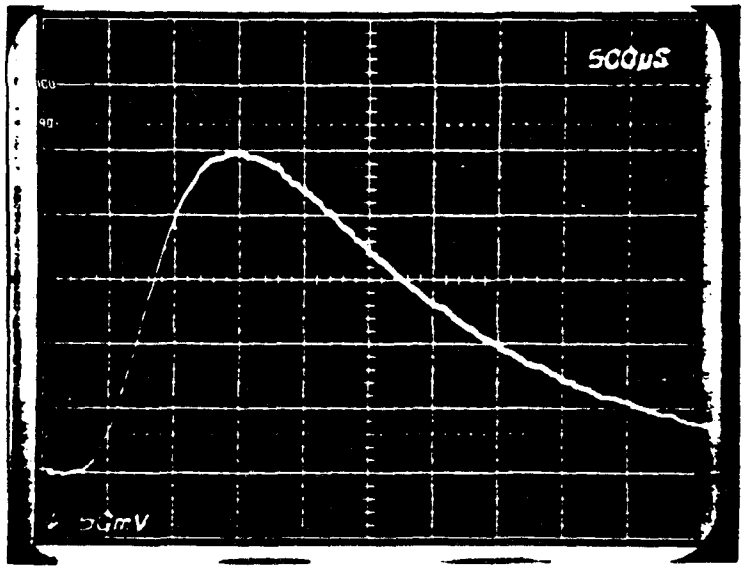

(b) Vertical: 1000 x 50 mV/div
Horizontal: 500 µsec/div

Figure 5-60. Diffusion signal for 1-inch galvanized steel conduit showing sense wire voltage.

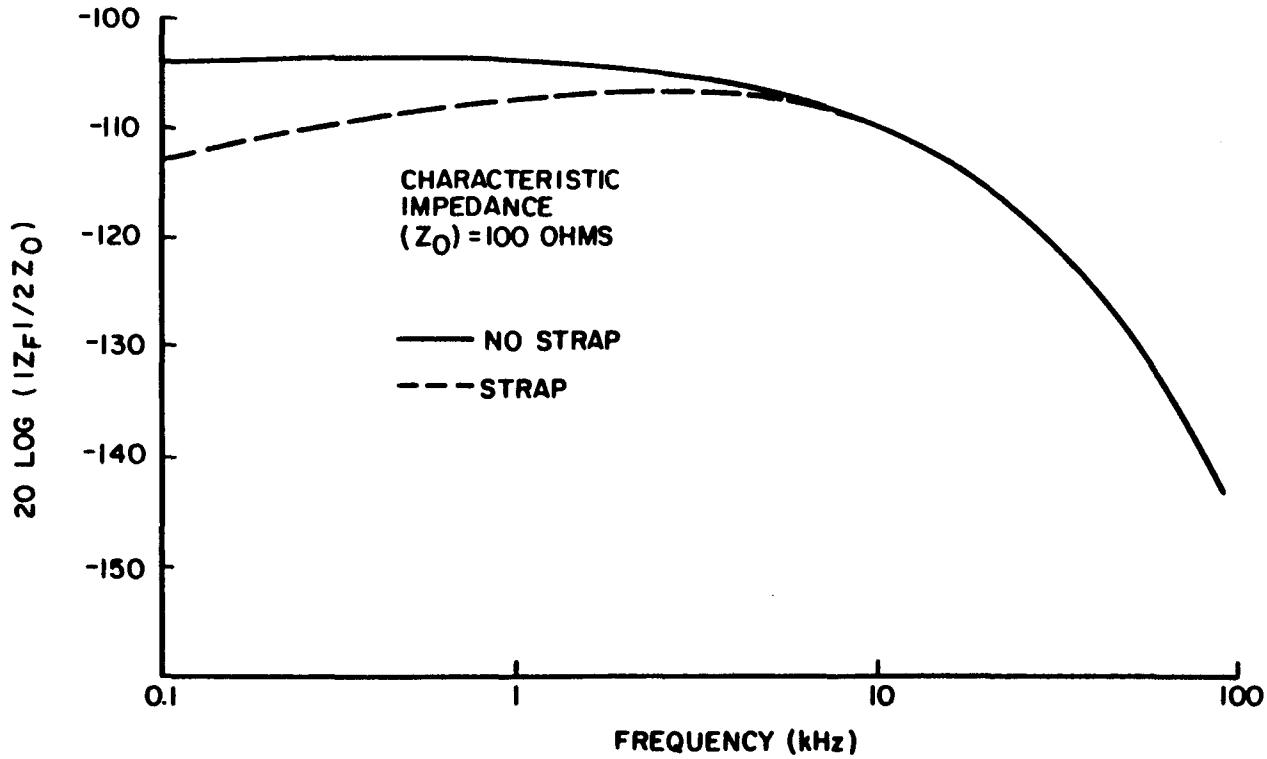

Figure 5-61. Flaw impedance (Z_F) of 0.038-millimeter (0.015-inch) wall flex-joint with and without copper strap. (Source: ref 5-17)

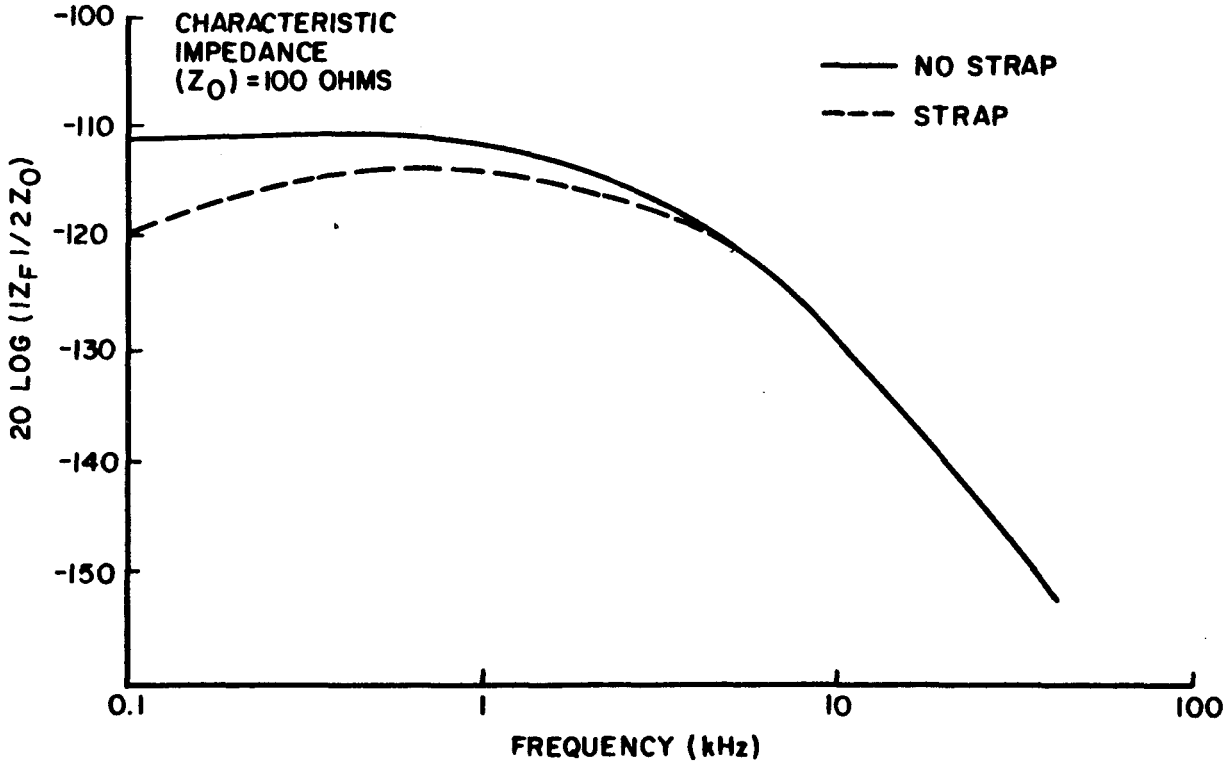

Figure 5-62. Flaw impedance (Z_F) of 0.76-millimeter (0.03-inch) wall flex-joint with and without copper strap. (Source: ref 5-17)

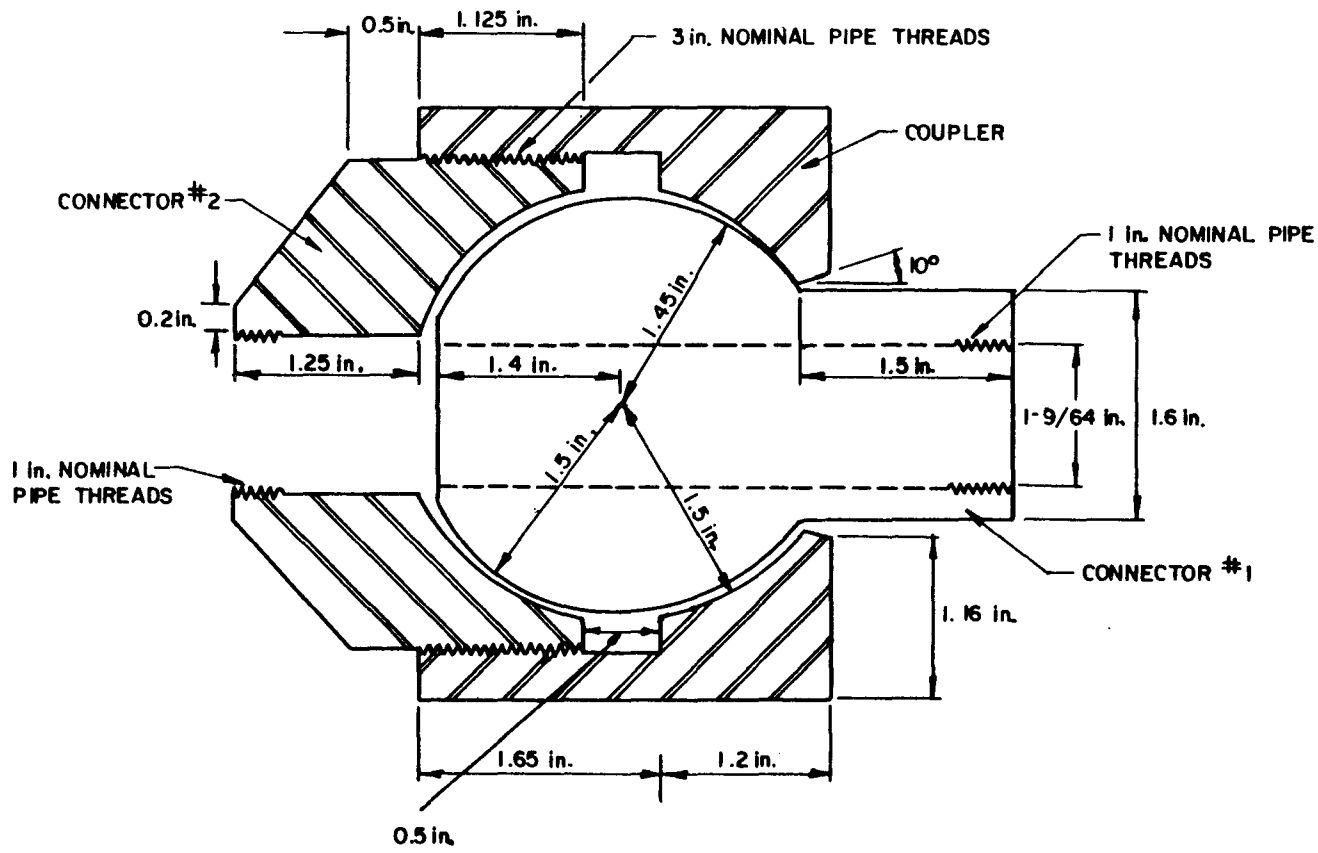

Figure 5-63. Experimental HEMP hardened union. (Source: ref 5-17)

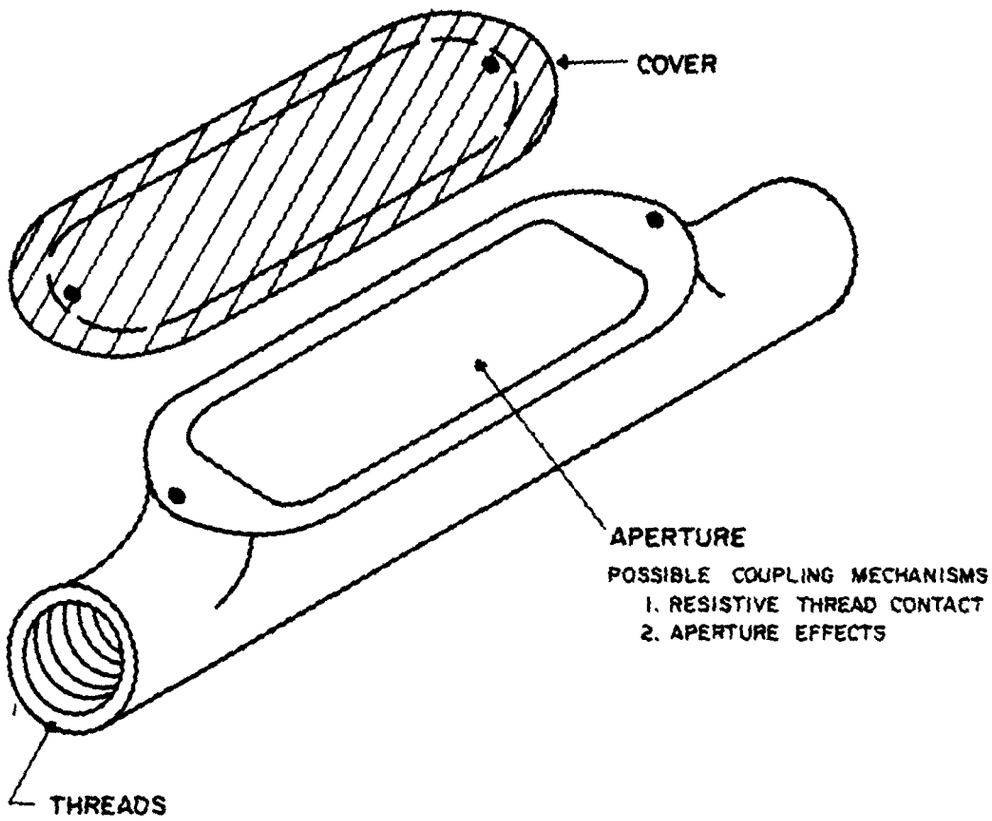

Figure 5-64. Type C conduit body. (Source: ref 5-17)

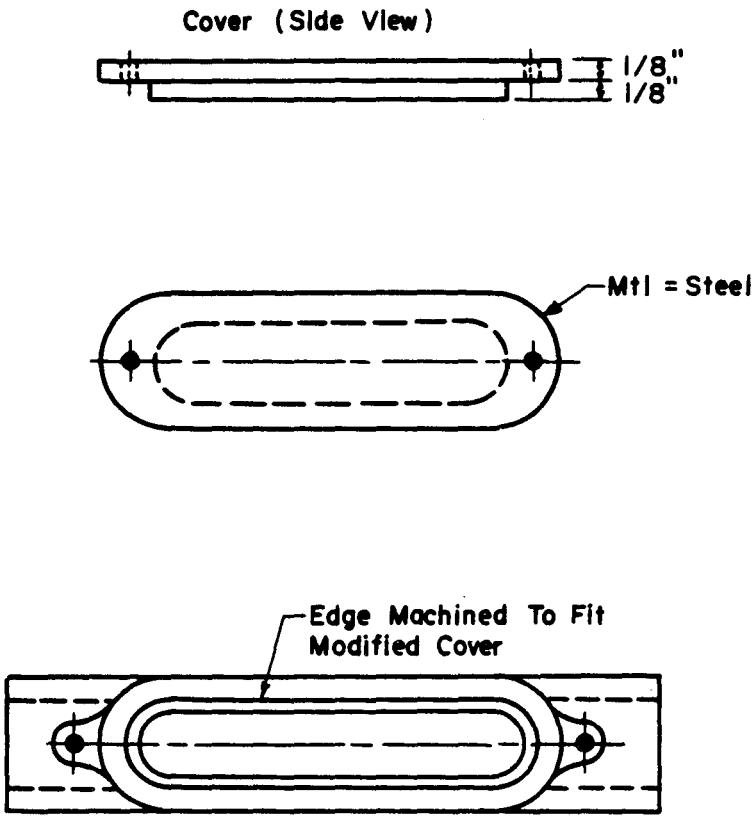

Figure 5-65. Machined conduit body cover for HEMP hardening. (Source: ref 5-17)

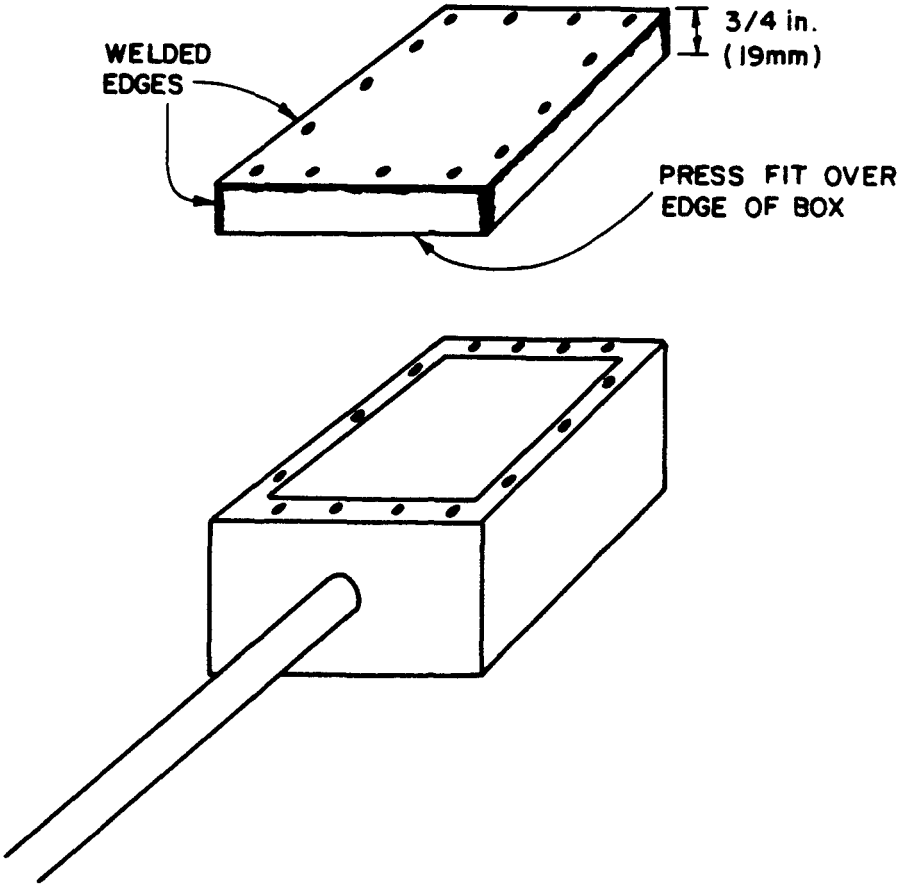

Figure 5-66. "Wrap-around" junction box cover. (Source: ref 5-17)

This page not used.

This page not used.

This page not used.

This page not used.

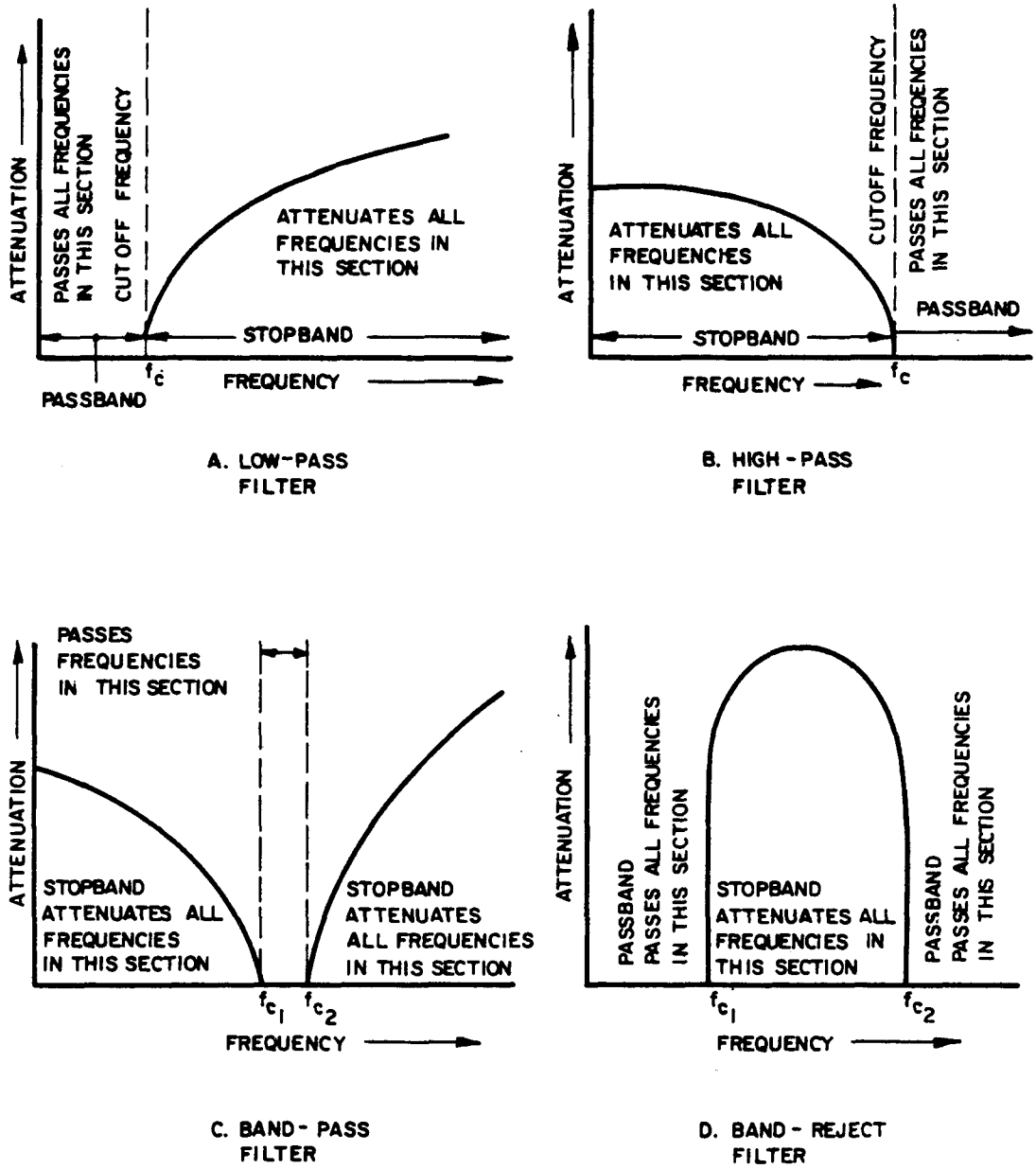

Figure 5-71. The four basic filter classes. (Source: ref 5-30)

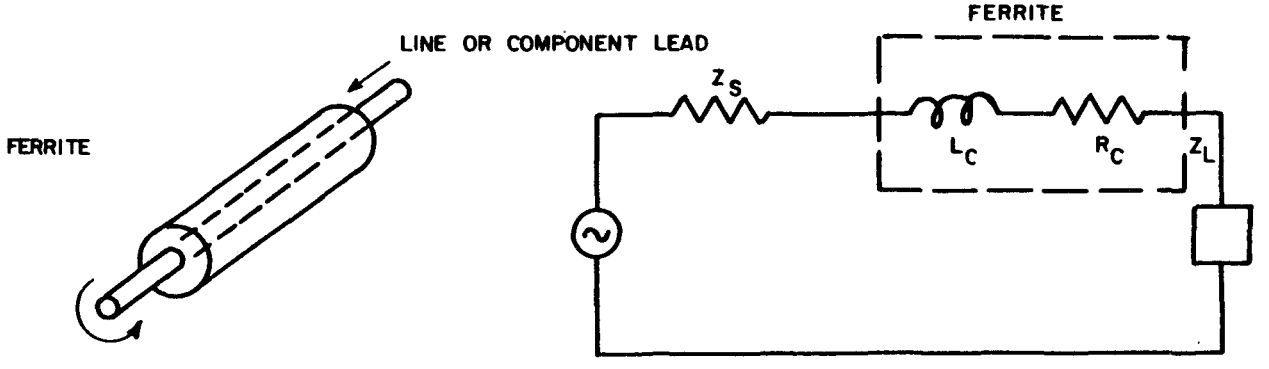

Figure 5-72. Ferrite bead on wire and ferrite bead equivalent circuit. (Source: ref 5-32)

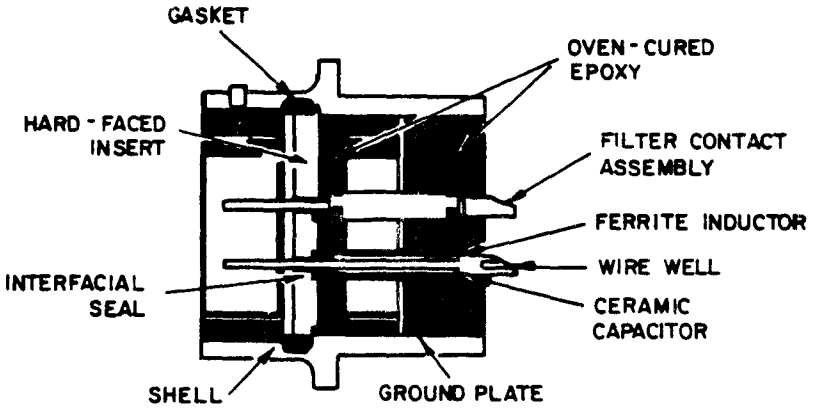

INTERNAL CONSTRUCTION OF A FILTER-PIN CONNECTOR CONTAINING PASSIVE ELEMENTS

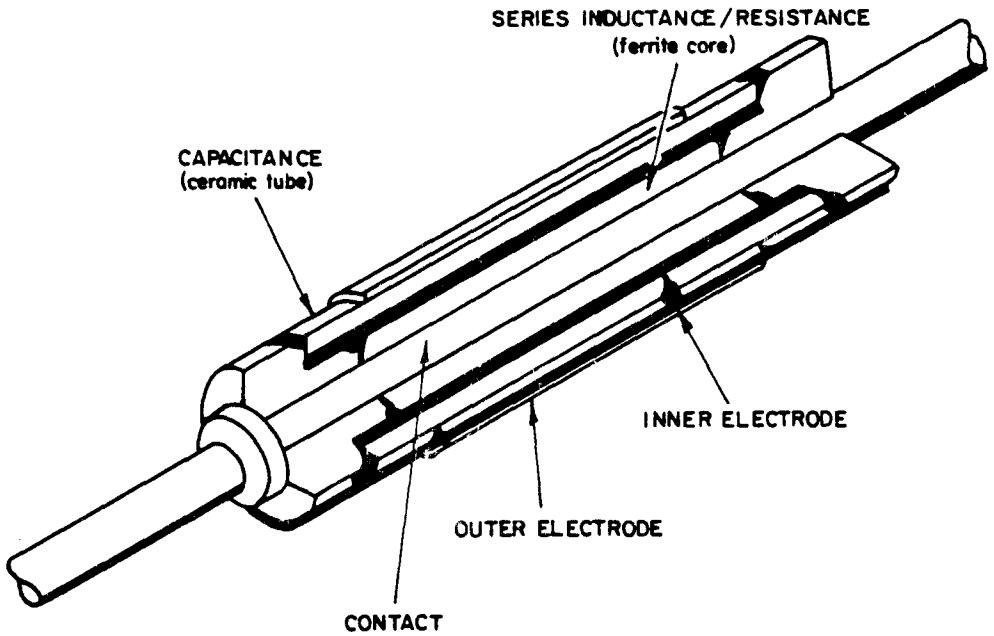

FILTER-PIN CONSTRUCTION CONTAINING PASSIVE ELEMENTS

Figure 5-73. Filter pin connector design. (Source: ref 5-7)

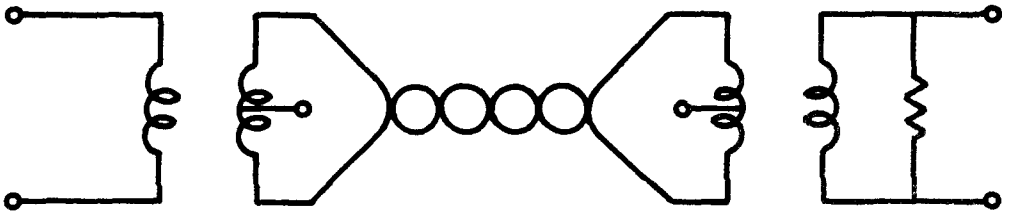

SHUNT CONFIGURATION

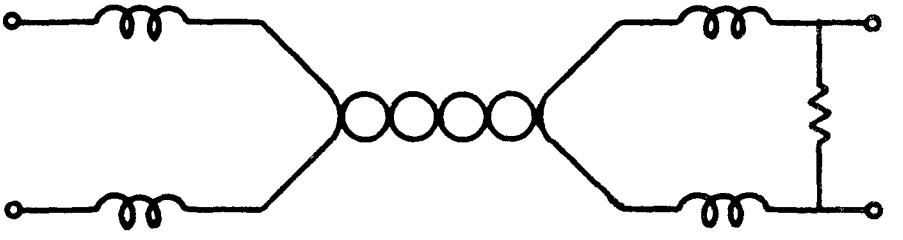

SERIES CONFIGURATION

Figure 5-74. Shunt and series transformer wiring configuration. (Source: ref 5-32)

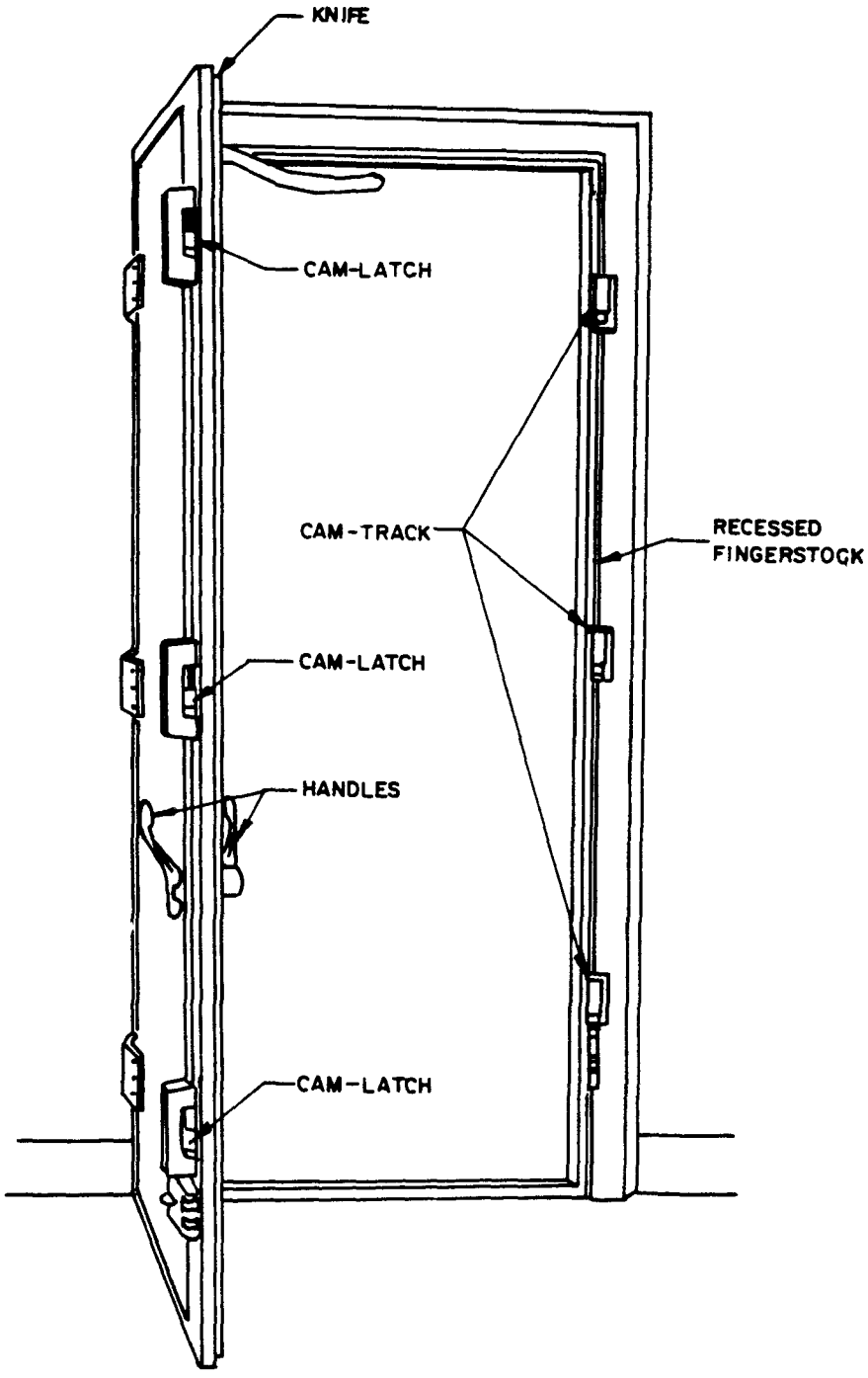

Figure 5-75. Typical shielded door closures. (sheet 1 of 2)

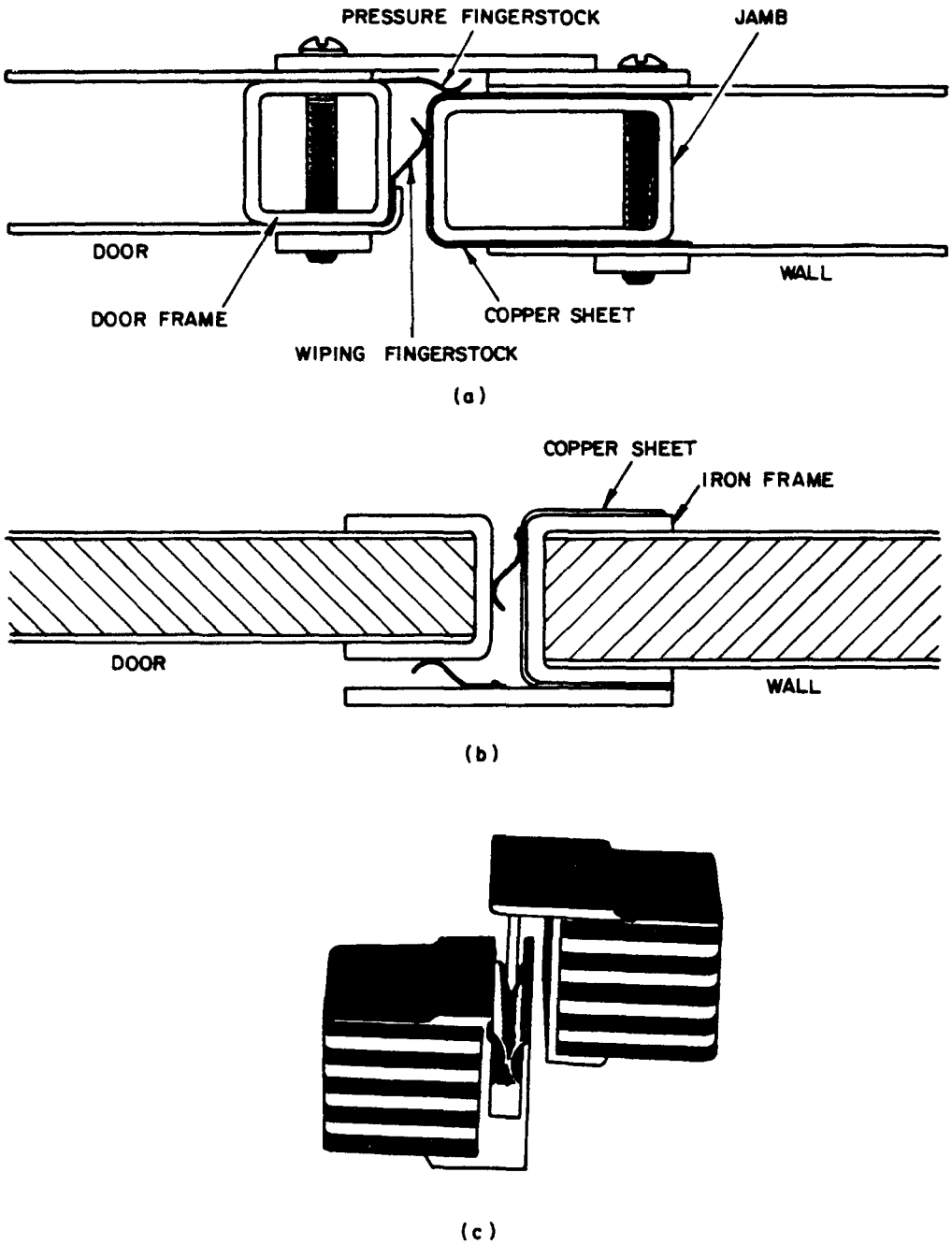

Figure 5-75. Typical shielded door closures. (sheet 2 of 2)

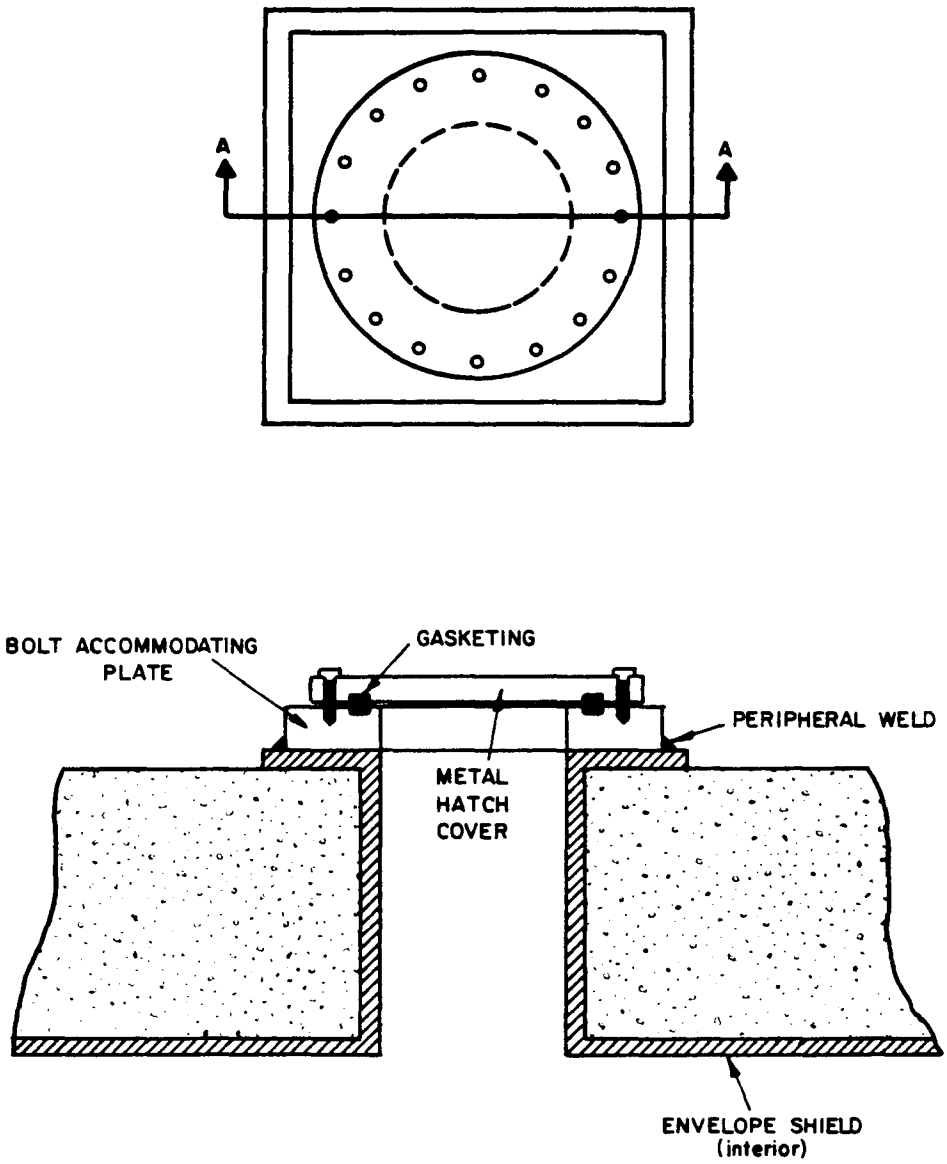

Figure 5-76. Emergency escape hatch configuration. (Source: ref 5-7)

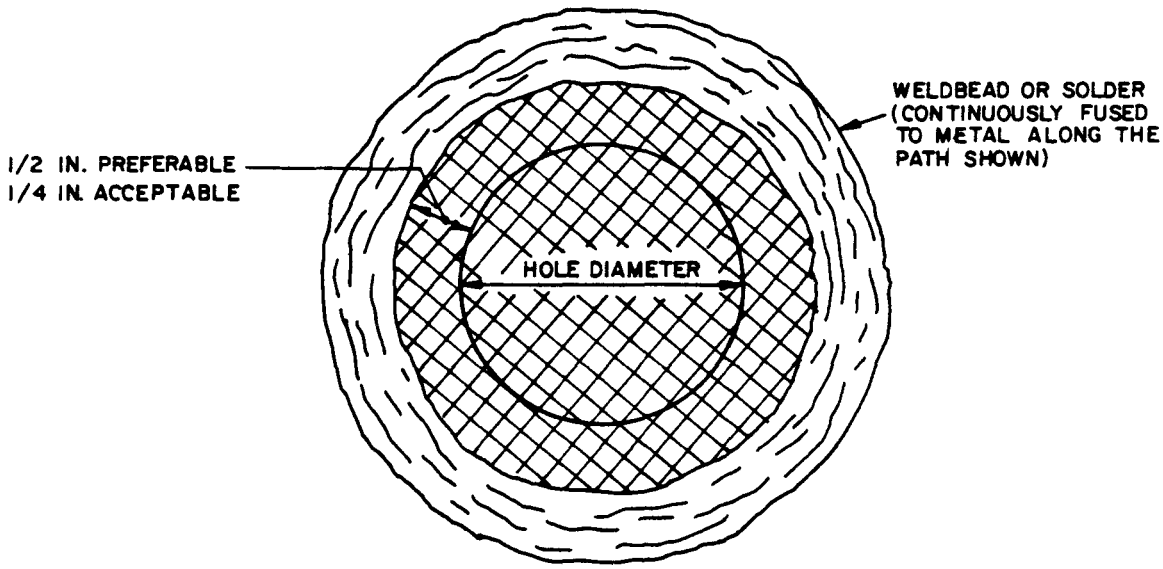

Figure 5-77. Typical welded screen installation over a ventilation aperture. (Source: ref 5-3)

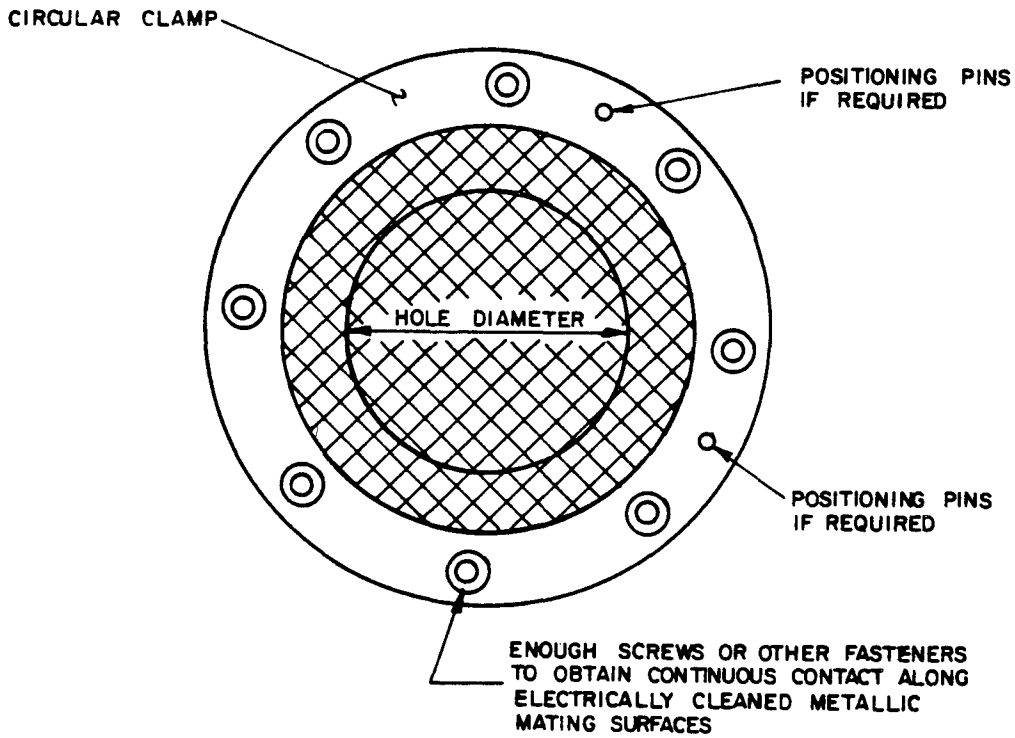

Figure 5-78. Typical clamped screen installation over a ventilation aperture. (Source: ref 5-3)

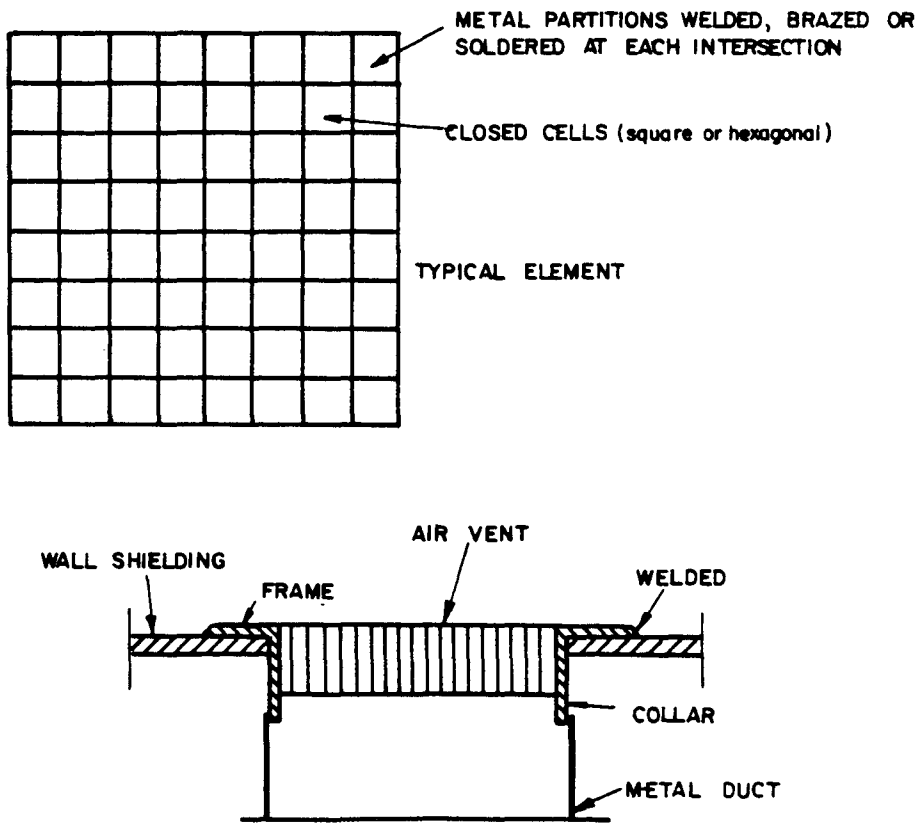

Figure 5-79. Honeycomb material for shielding air vents. (Source: ref 5-7)

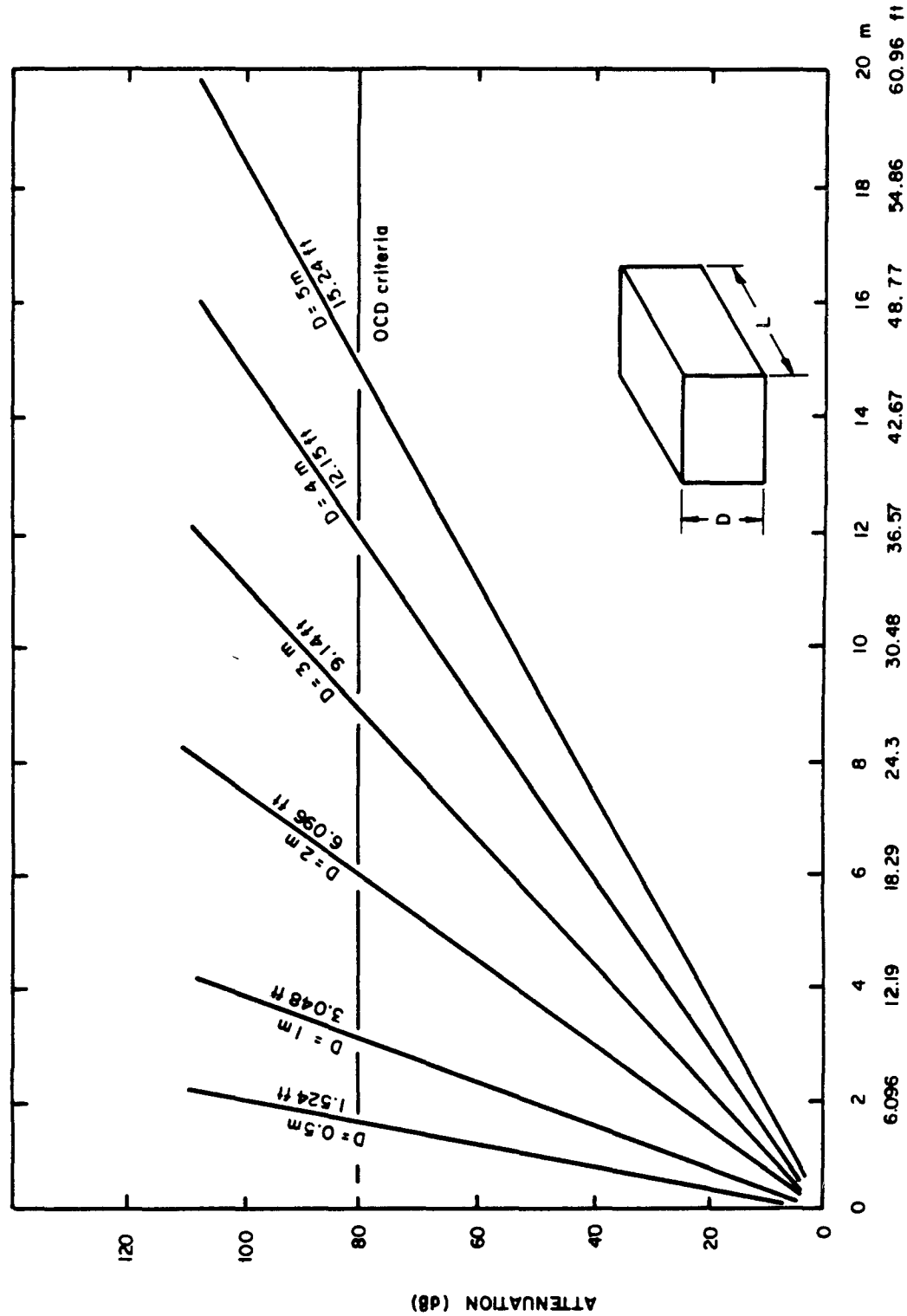

Figure 5-80. Waveguide attenuation as a function of waveguide dimensions. (Source: ref 5-28)

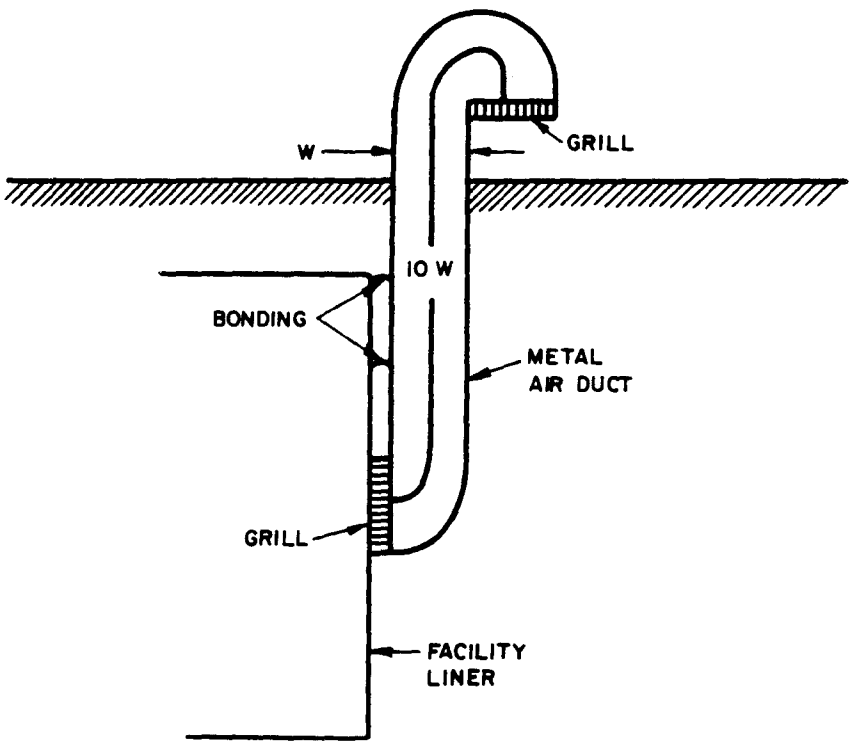

Figure 5-81. Air vent HEMP protection design. (Source: ref 5-7)

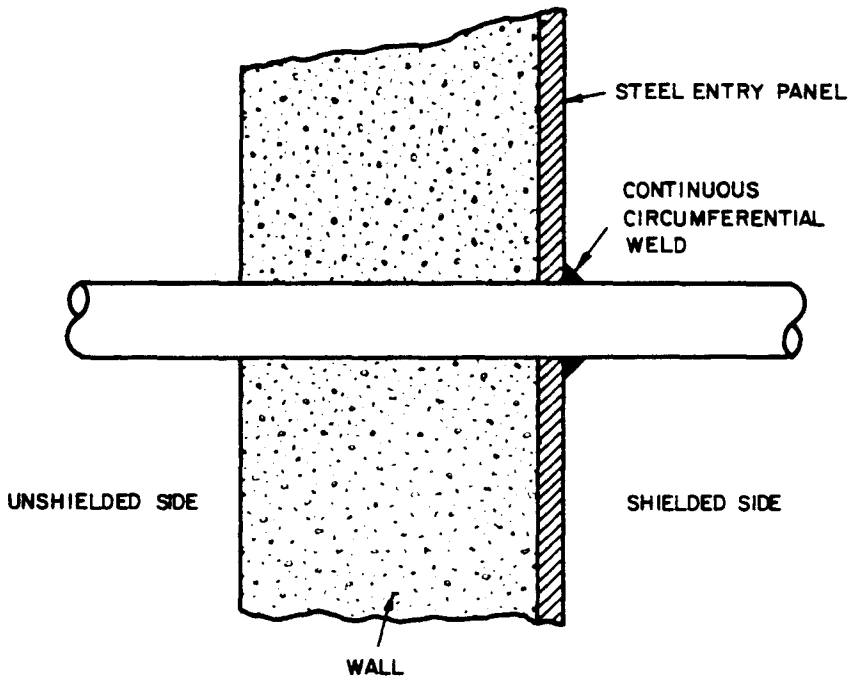

Figure 5-82. Conduit or metal pipe penetration design. (Source: ref 5-7)

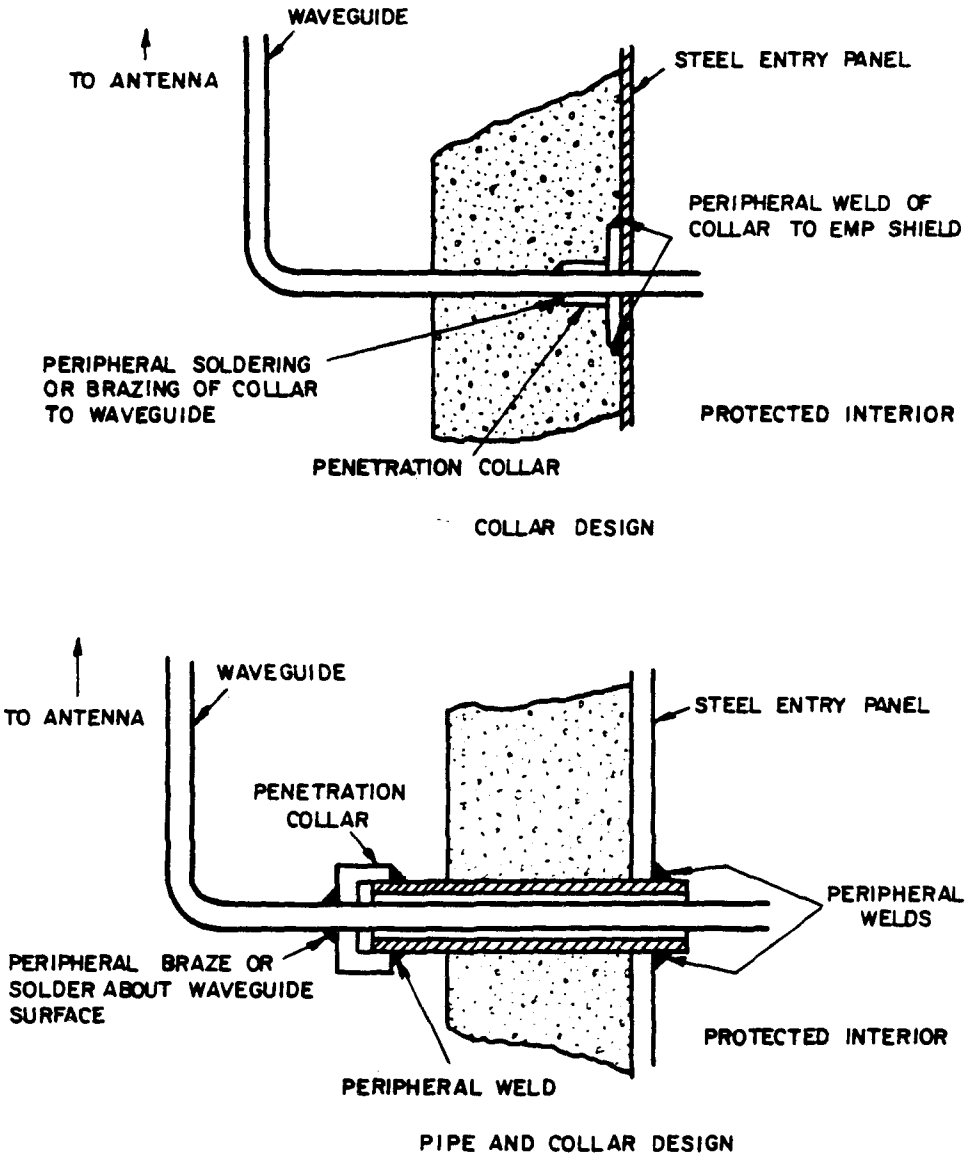

Figure 5-83. HEMP protection for waveguide entry. (Source: ref 5-7)

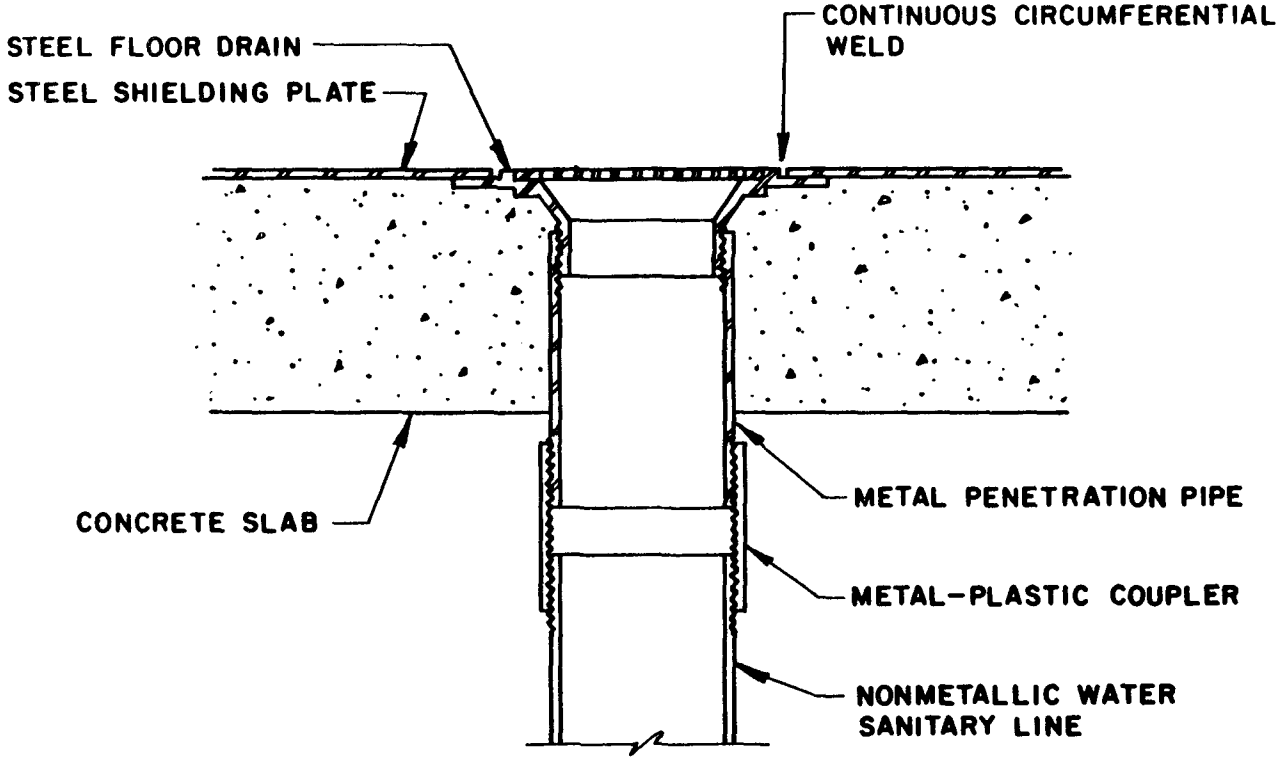

FLOOR DRAIN AND PIPE PENETRATION

Figure 5-84. Plastic pipe termination practices. (Source: ref 5-7) (sheet 1 of 2)

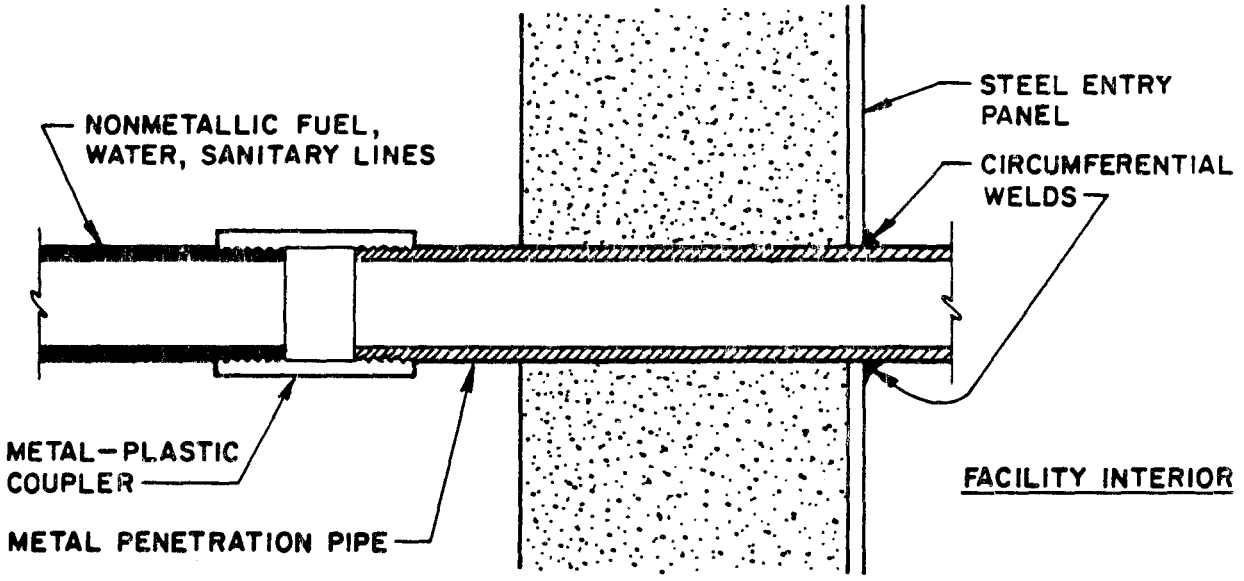

PIPE TERMINATION

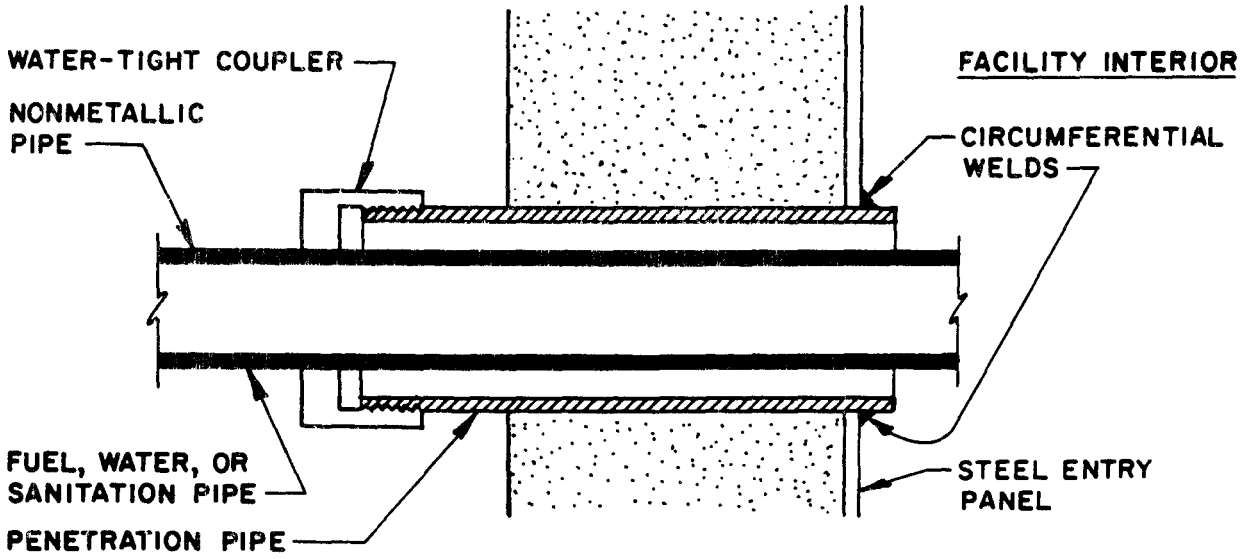

PIPE FEEDTHROUGH

Figure 5-84. Plastic pipe termination practices. (Source: ref 5-7) (sheet 2 of 2)

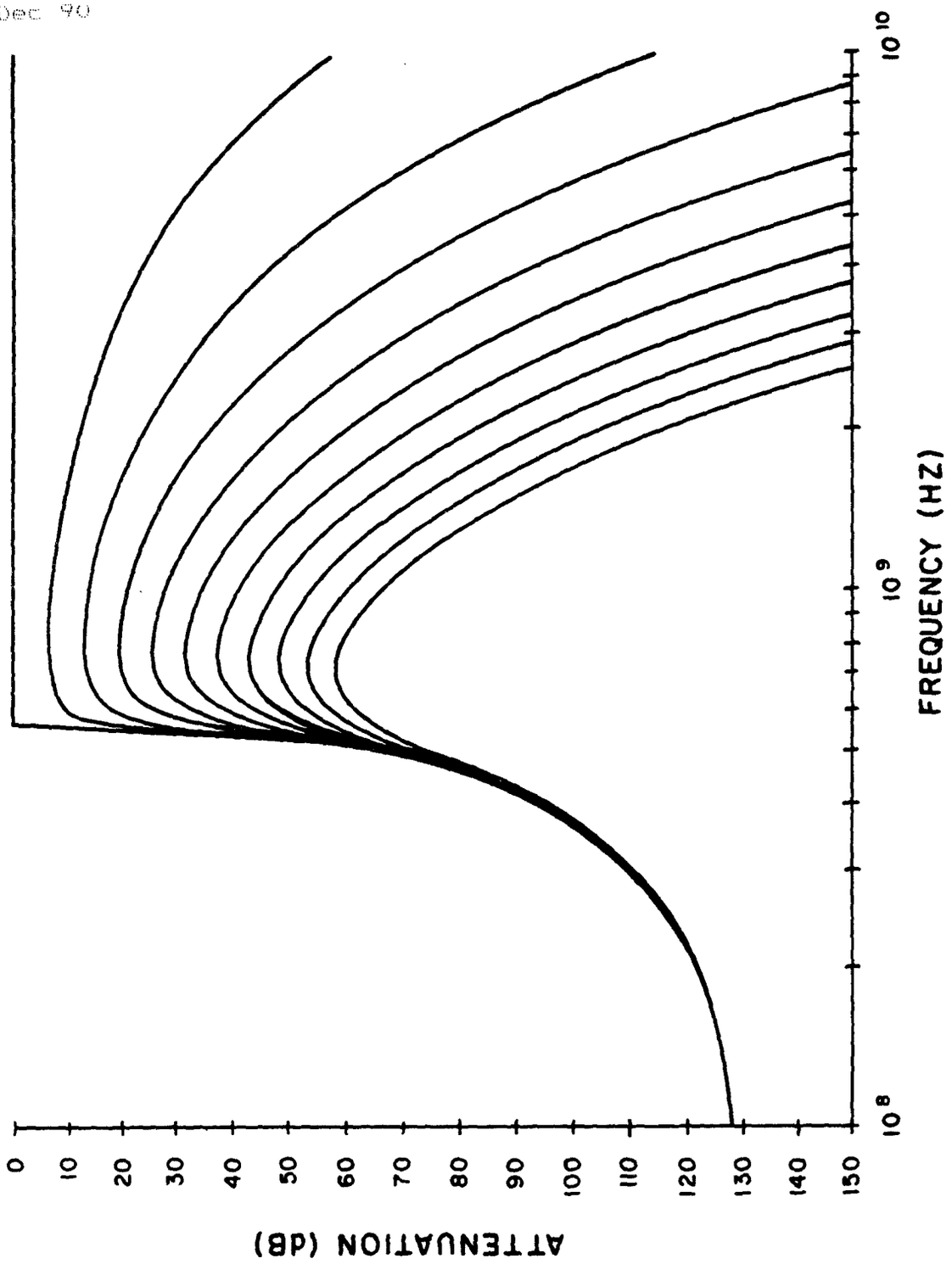

Figure 5-85. Theoretical attenuation of the TE_{11} mode for a 1.5-inch (3.8-centimeter) internal diameter pipe with distilled water for various loss tangents. (Source: ref 5-20)

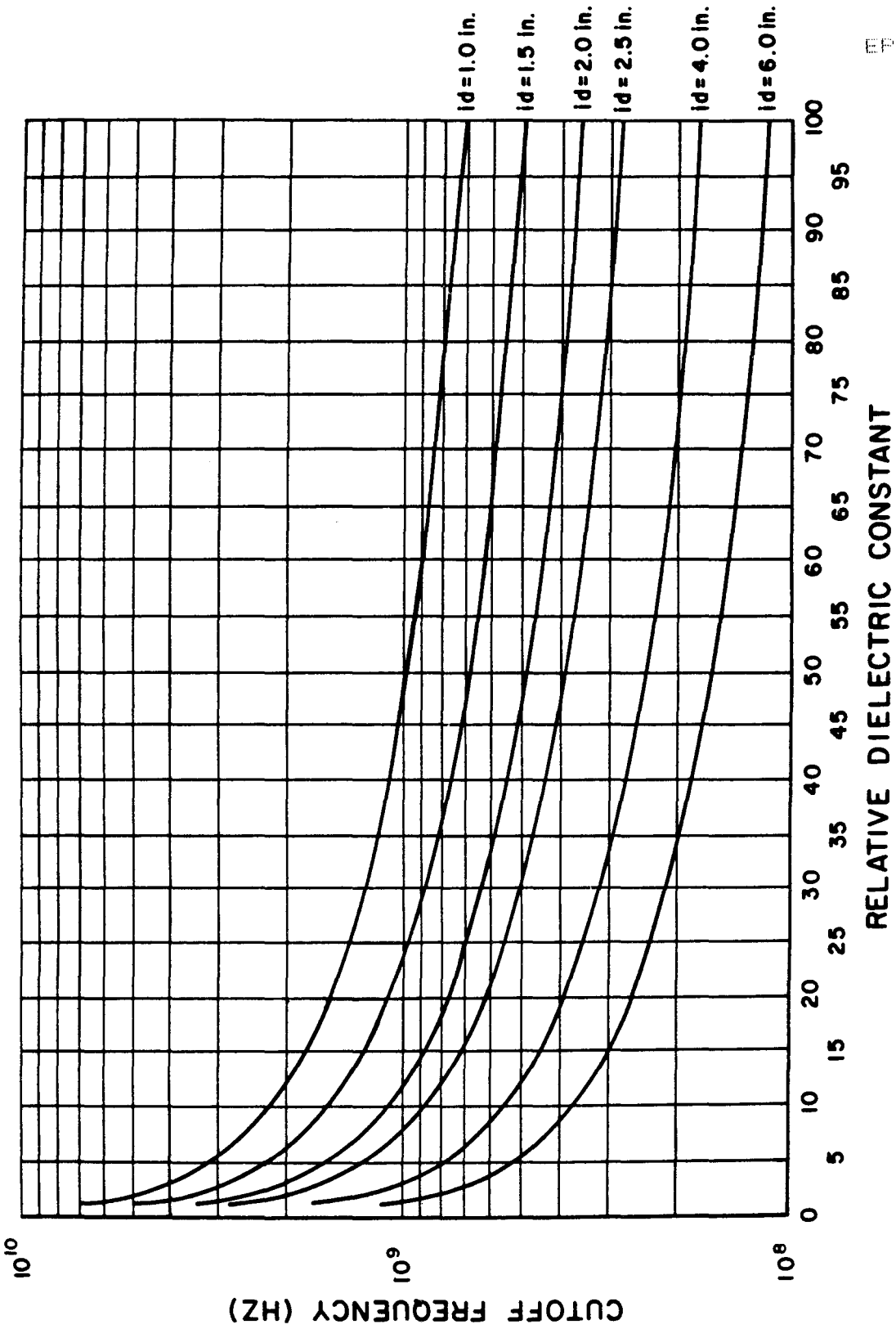

Figure 5-86. Cutoff frequency versus relative dielectric constant for various pipe diameters. (Source: ref 5-20)

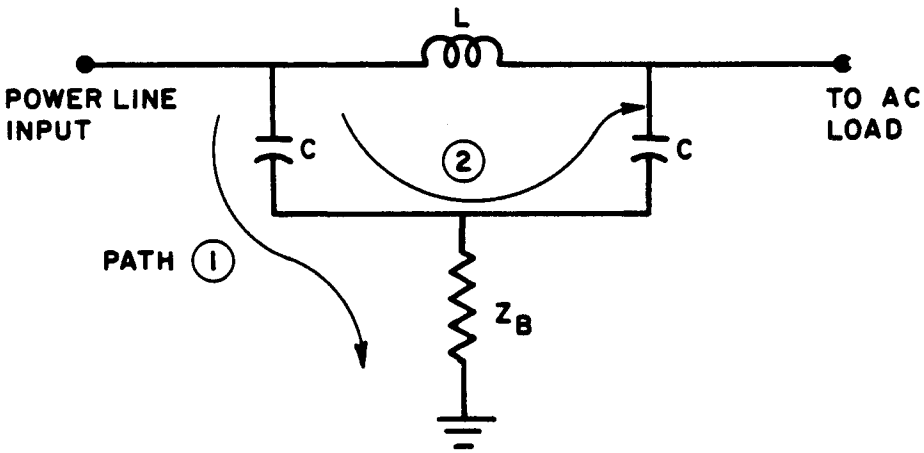

Figure 5-87. Effects of poor bonding on the performance of a power line filter. (Source: ref 5-6)

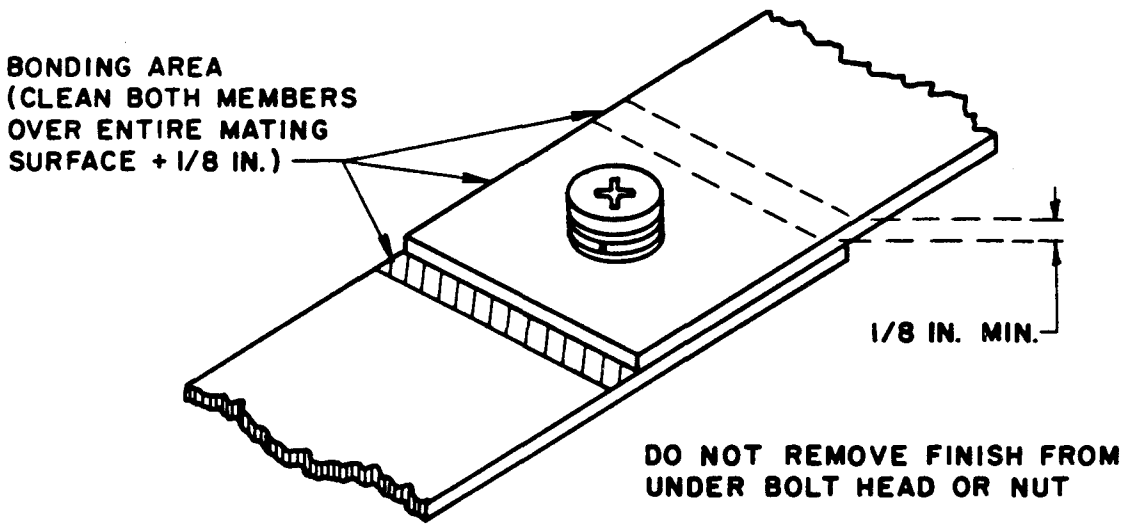

Figure 5-88. Bolted bond between flat bars. (Source: ref 5-6)

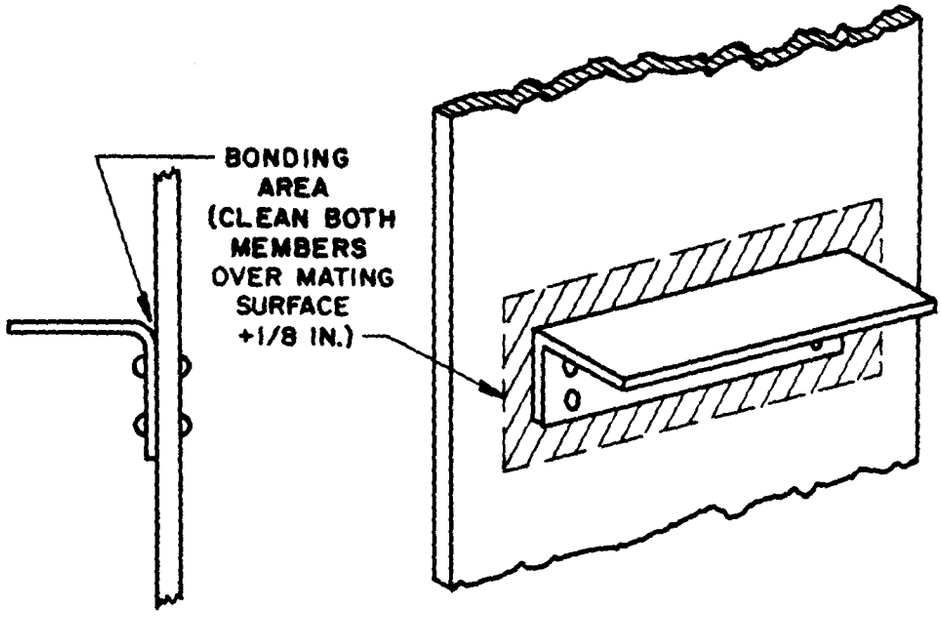

Figure 5-89. Bracket installation (bolt). (Source: ref 5-6)

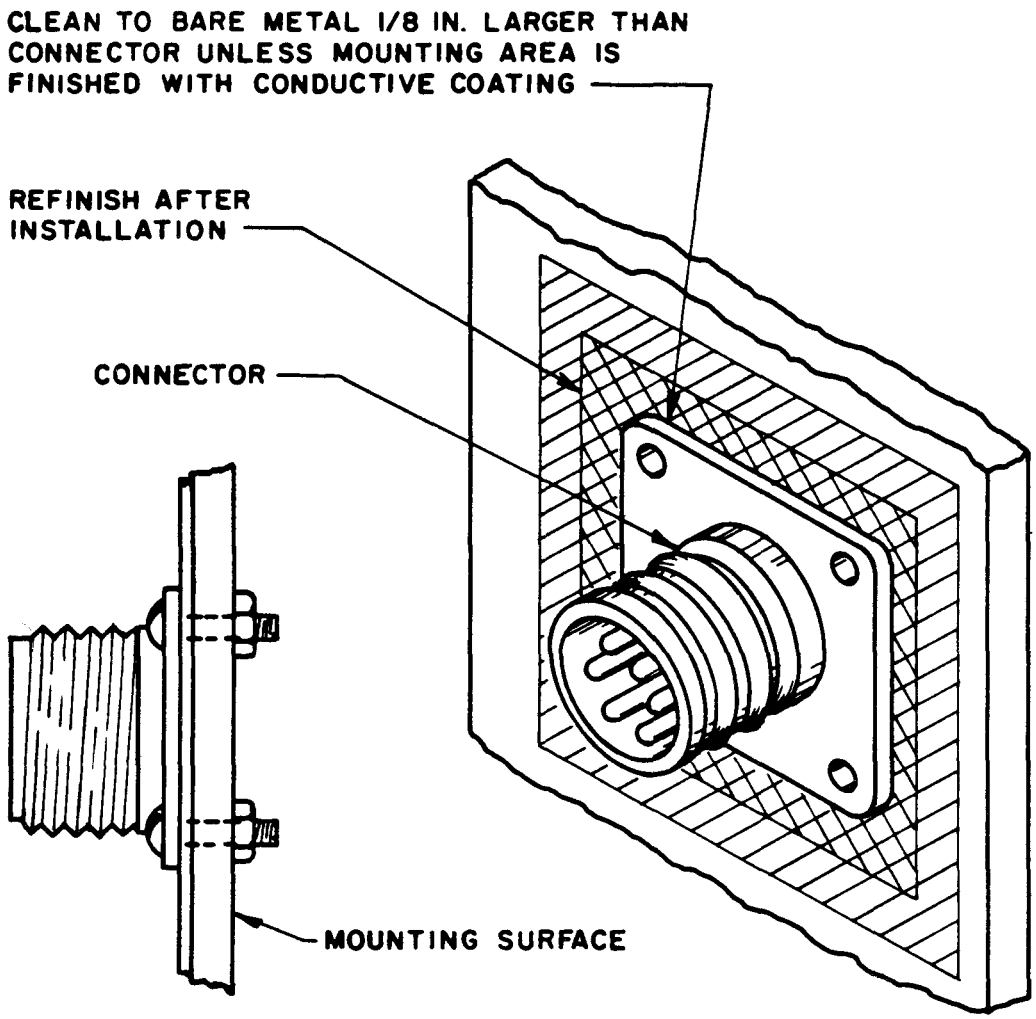

Figure 5-90. Bonding of connector to mounting surface. (Source: ref 5-6)

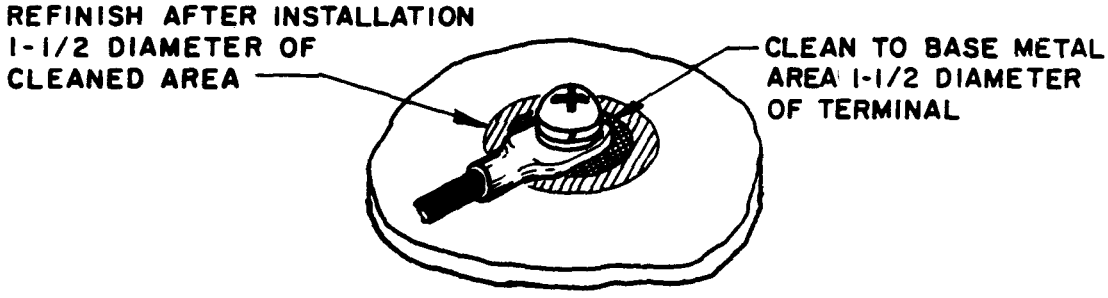

Figure 5-91. Bolting of bonding jumpers to flat surface. (Source: ref 5-6)

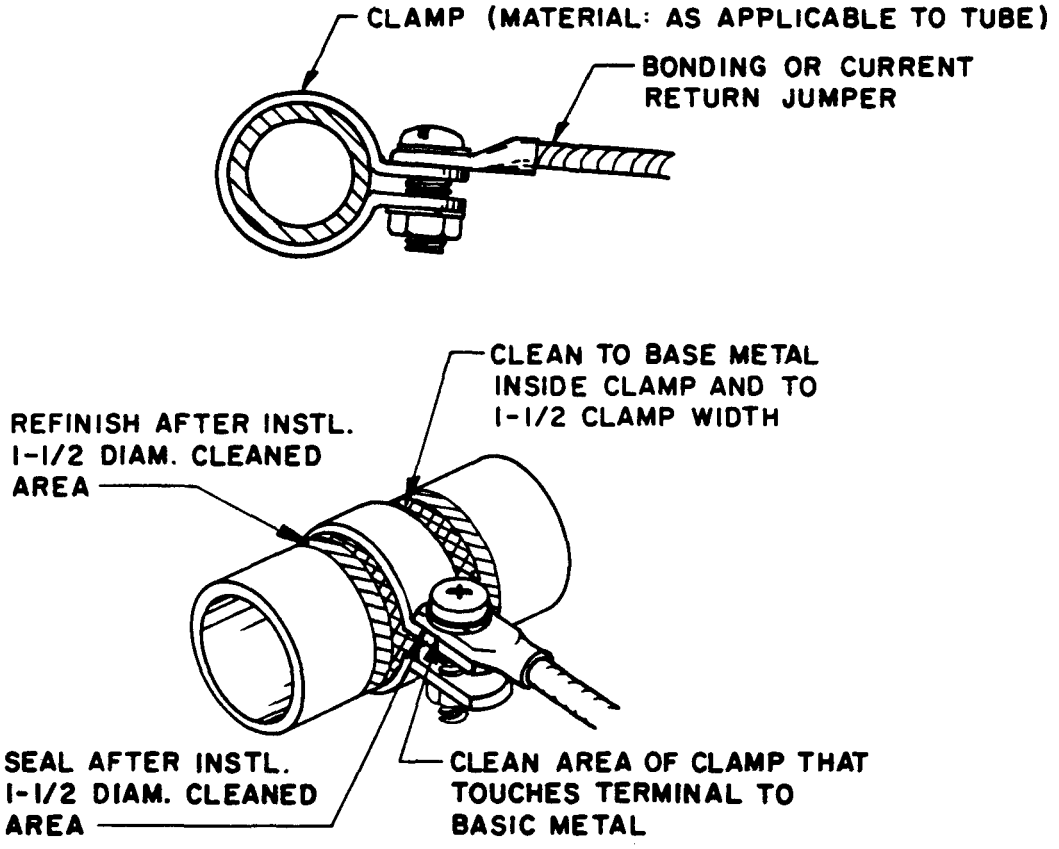

Figure 5-92. Bonding to rigid conduit. (Source: ref 5-6)

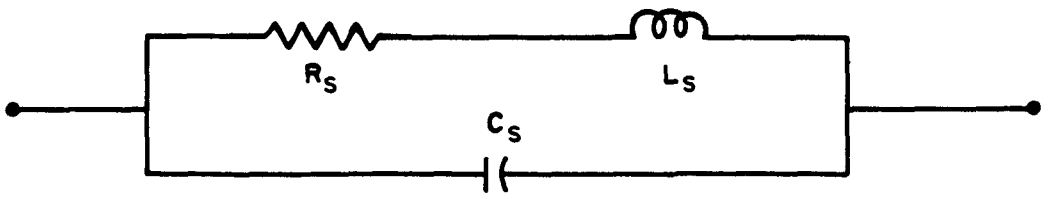

Figure 5-93. Equivalent circuit for bonding strap. (Source: ref 5-6)

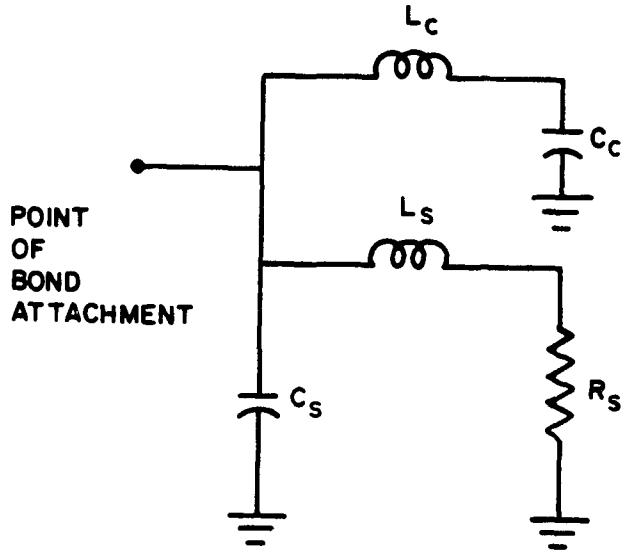

Figure 5-94. True equivalent circuit of a bonded system. (Source: ref 5-6)

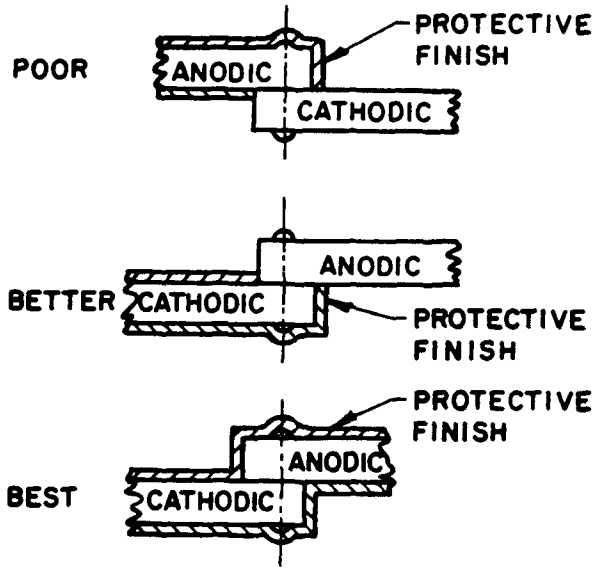

Figure 5-95. Techniques for protecting bonds between dissimilar metals. (Source: ref 5-6)

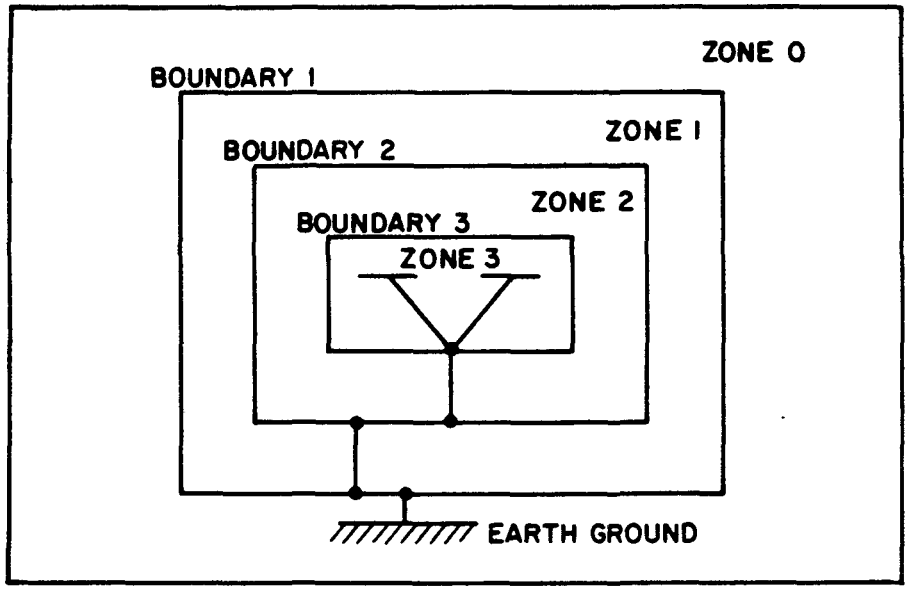

Figure 5-96. Zonal grounding.

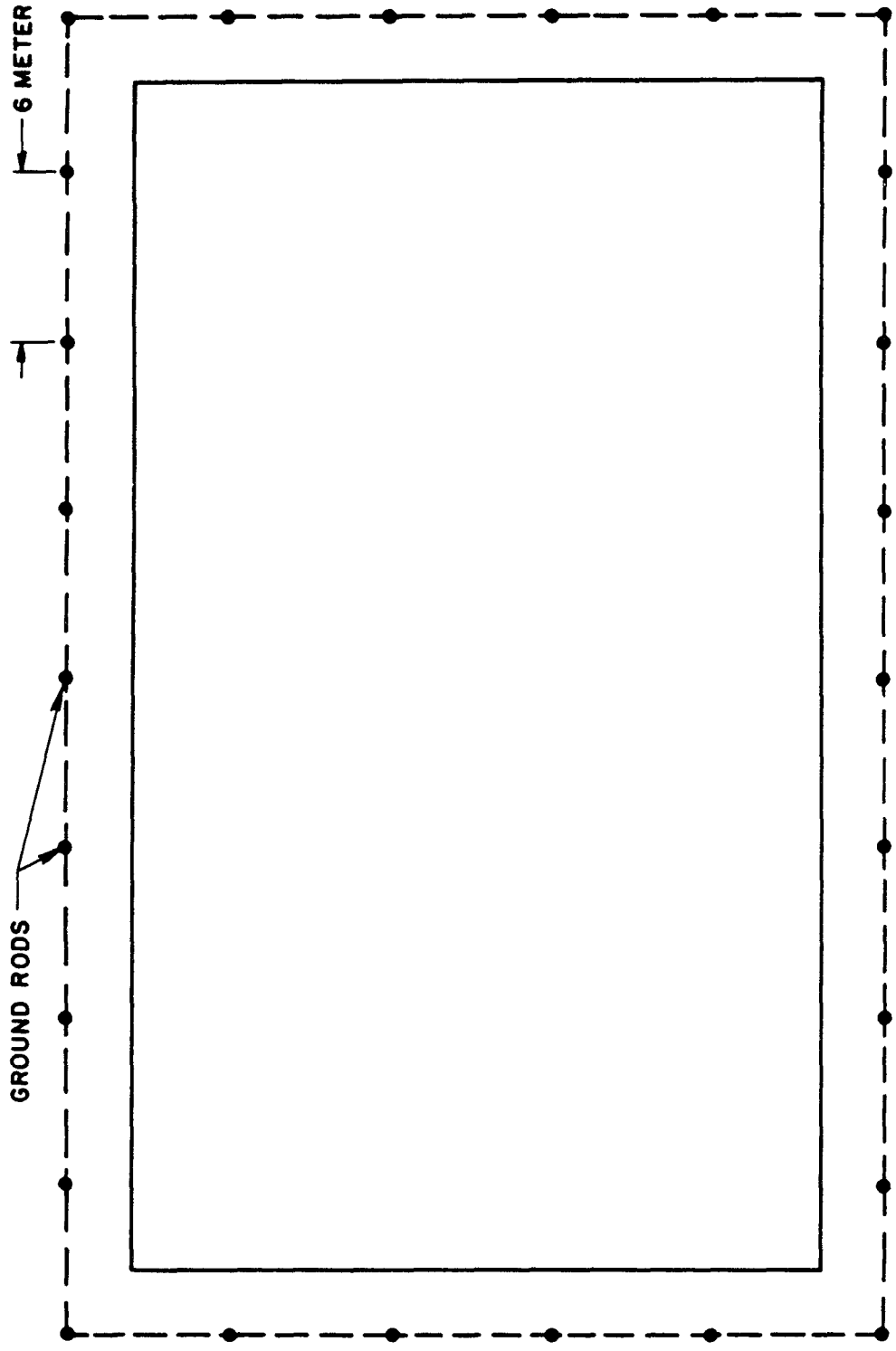

Figure 5-97. Minimum earth electrode system configuration for rectangular-shaped facility. (Source: ref 5-6)

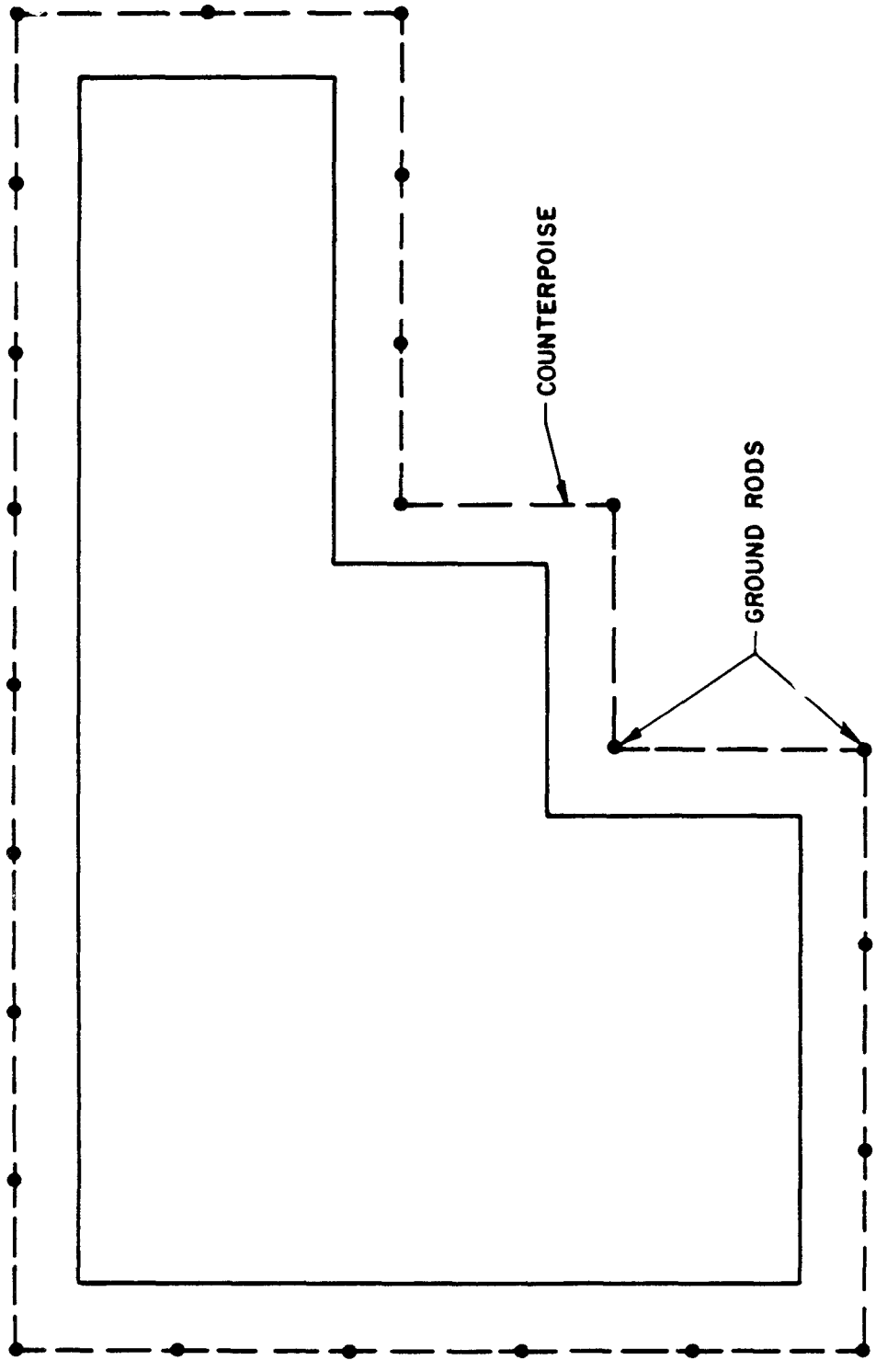

Figure 5-98. Electrode configuration for irregular-shaped facility. (Source: ref 5-6)

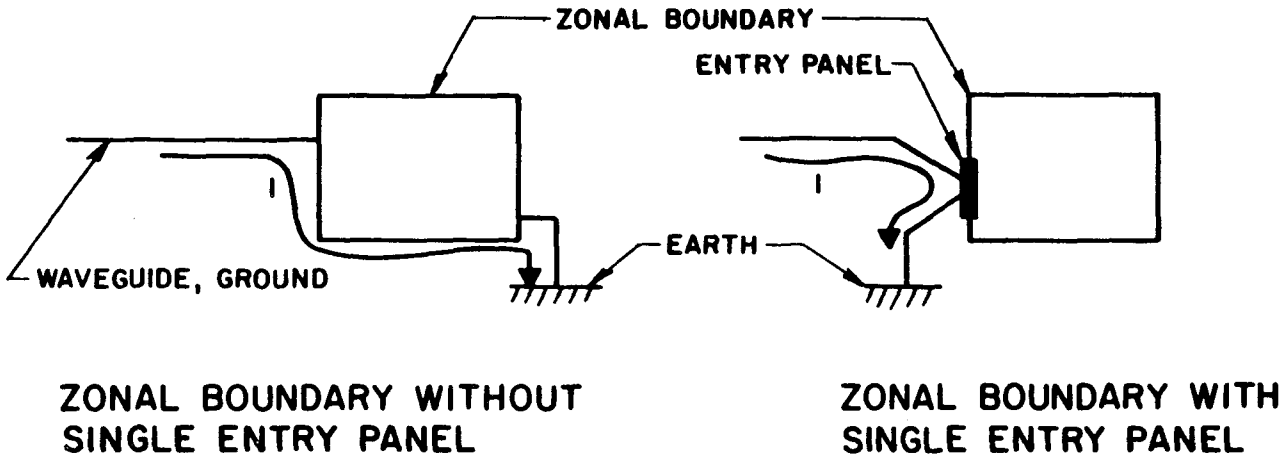

Figure 5-99. Current path on zonal boundaries.

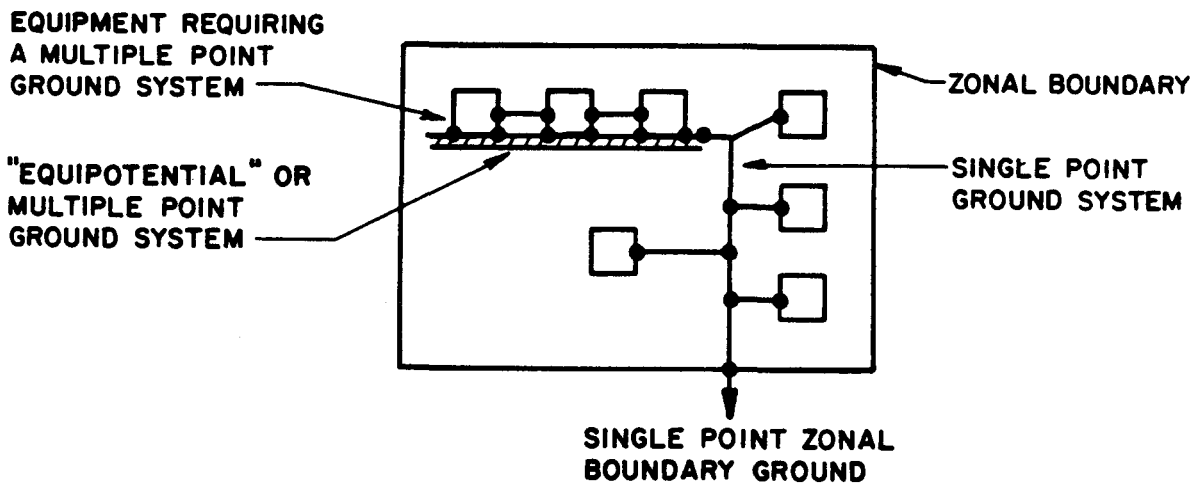

Figure 5-100. Typial hybrid ground configuration.

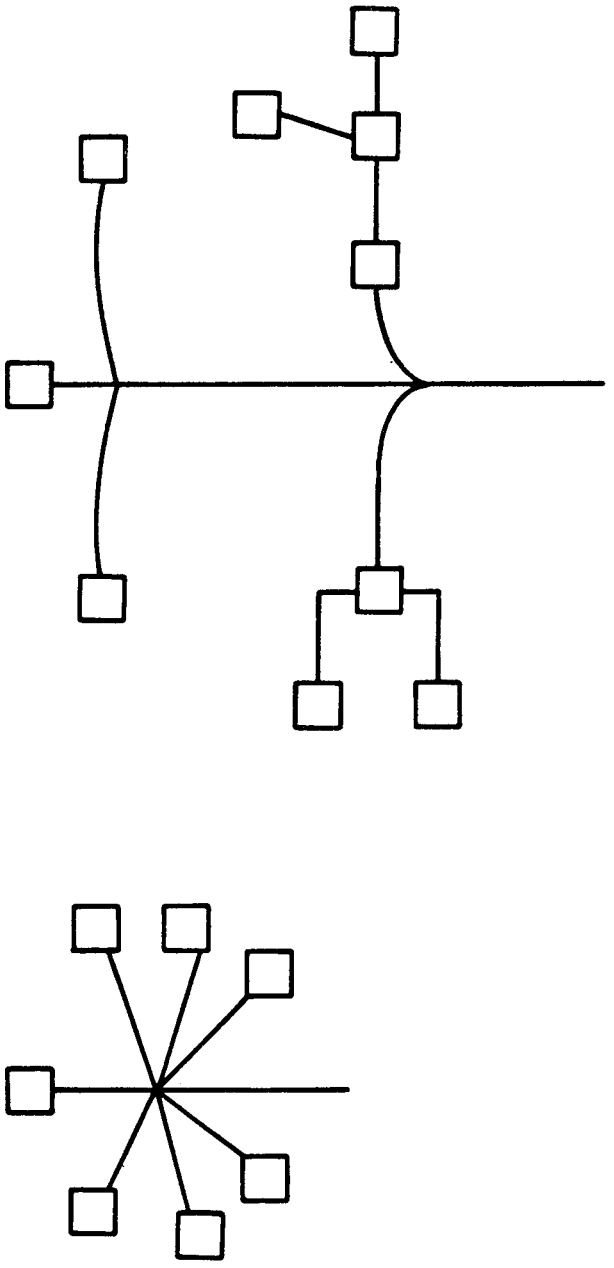

Figure 5-101. Typical ground configurations for HEMP protection.