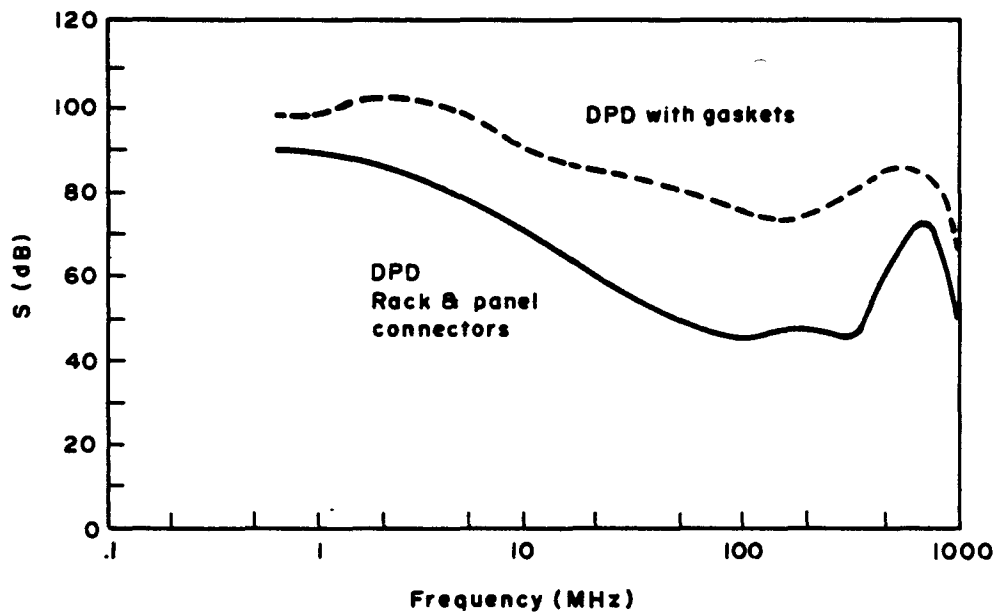

Figure 5-56. Effect of adding shielding gaskets on connector shielding effectiveness. (Source: ref 5-16)

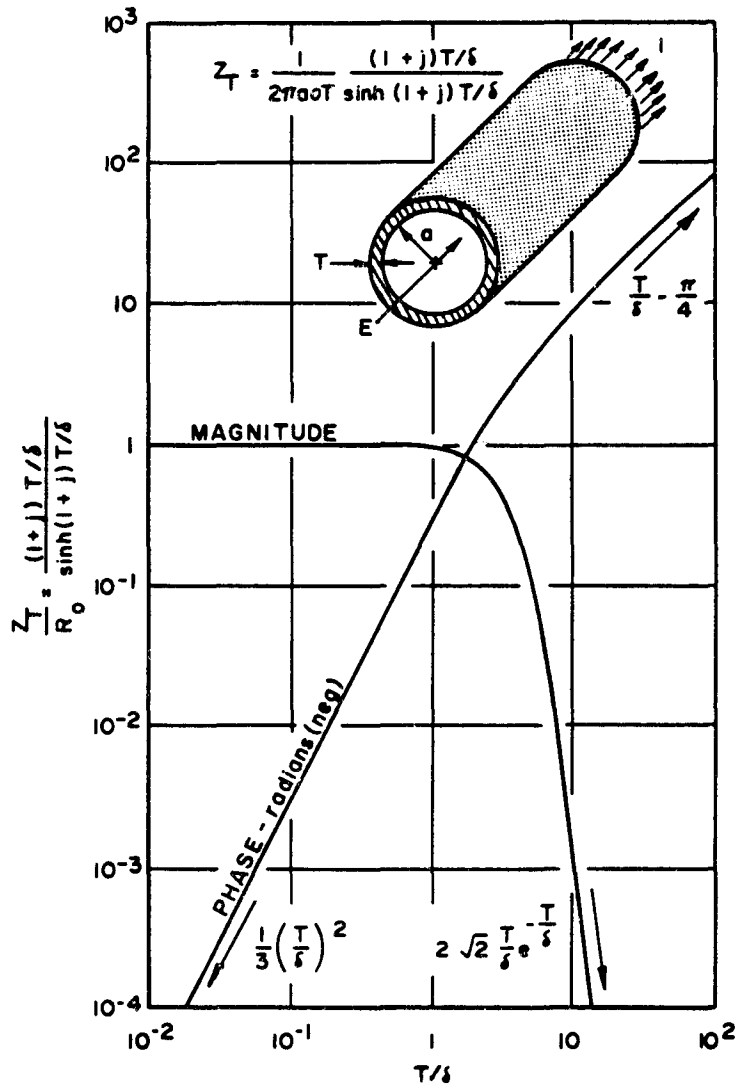

Figure 5-57. Normalized transfer impedance for solid cylindrical shields. (Source: ref 5-31)

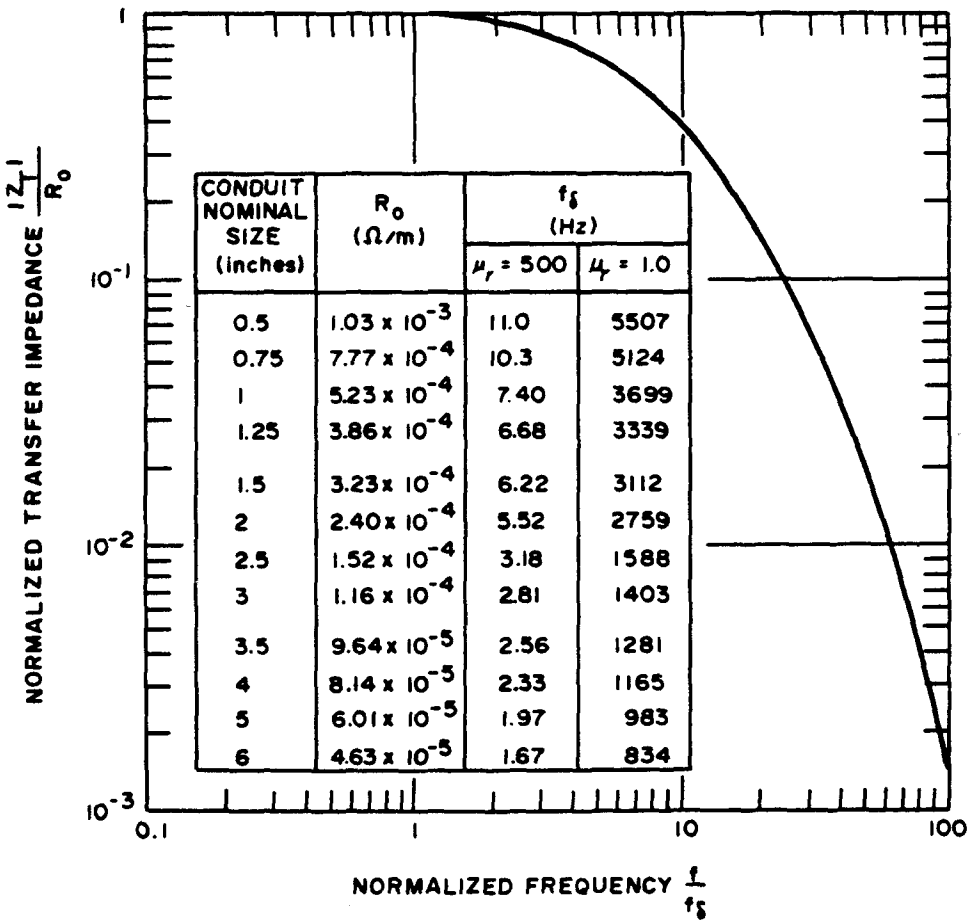

CONDUIT NOMINAL SIZE (inches)	R_o (Ω/m)	f_δ (Hz)	
		$\mu_r = 500$	$\mu_r = 1.0$
0.5	1.03×10^{-3}	11.0	5507
0.75	7.77×10^{-4}	10.3	5124
1	5.23×10^{-4}	7.40	3699
1.25	3.86×10^{-4}	6.68	3339
1.5	3.23×10^{-4}	6.22	3112
2	2.40×10^{-4}	5.52	2759
2.5	1.52×10^{-4}	3.18	1588
3	1.16×10^{-4}	2.81	1403
3.5	9.64×10^{-5}	2.56	1281
4	8.14×10^{-5}	2.33	1165
5	6.01×10^{-5}	1.97	983
6	4.63×10^{-5}	1.67	834

Figure 5-58. Magnitude of the transfer impedance of rigid steel conduit. (Source: ref 5-31)

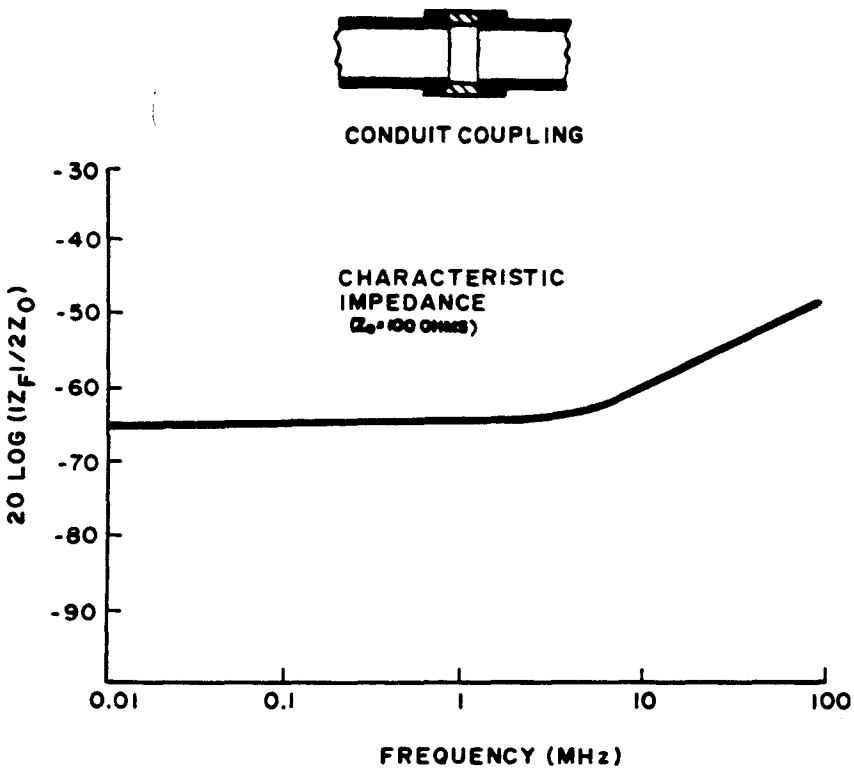

Figure 5-59. Flaw impedance (Z_F) of typical coupling. (Source: ref 5-17)

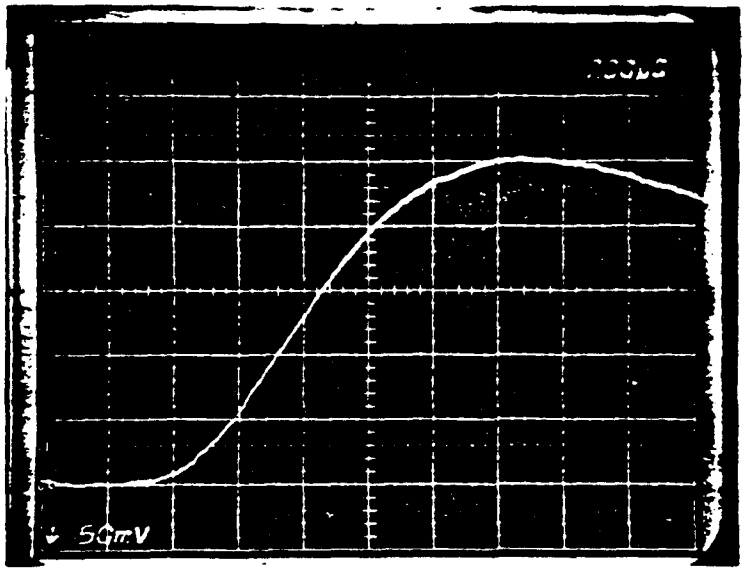

(a) Vertical: 1000 x 50 mV/div
Horizontal: 200 µsec/div

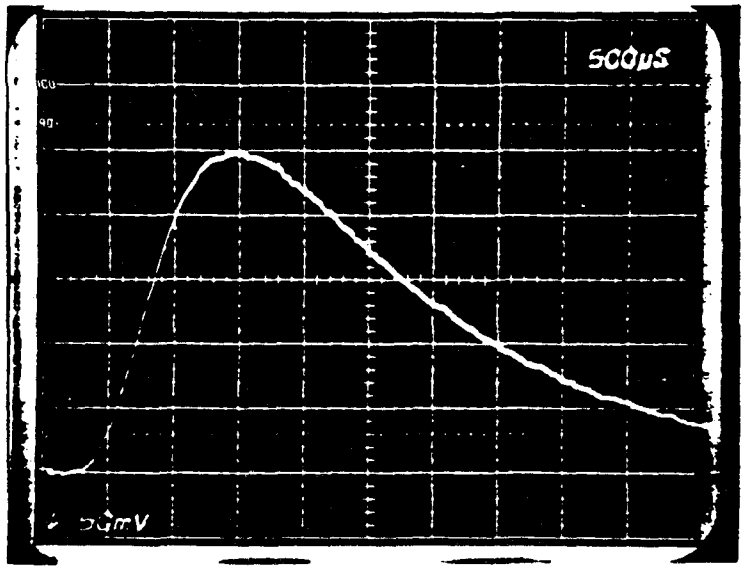

(b) Vertical: 1000 x 50 mV/div
Horizontal: 500 µsec/div

Figure 5-60. Diffusion signal for 1-inch galvanized steel conduit showing sense wire voltage.

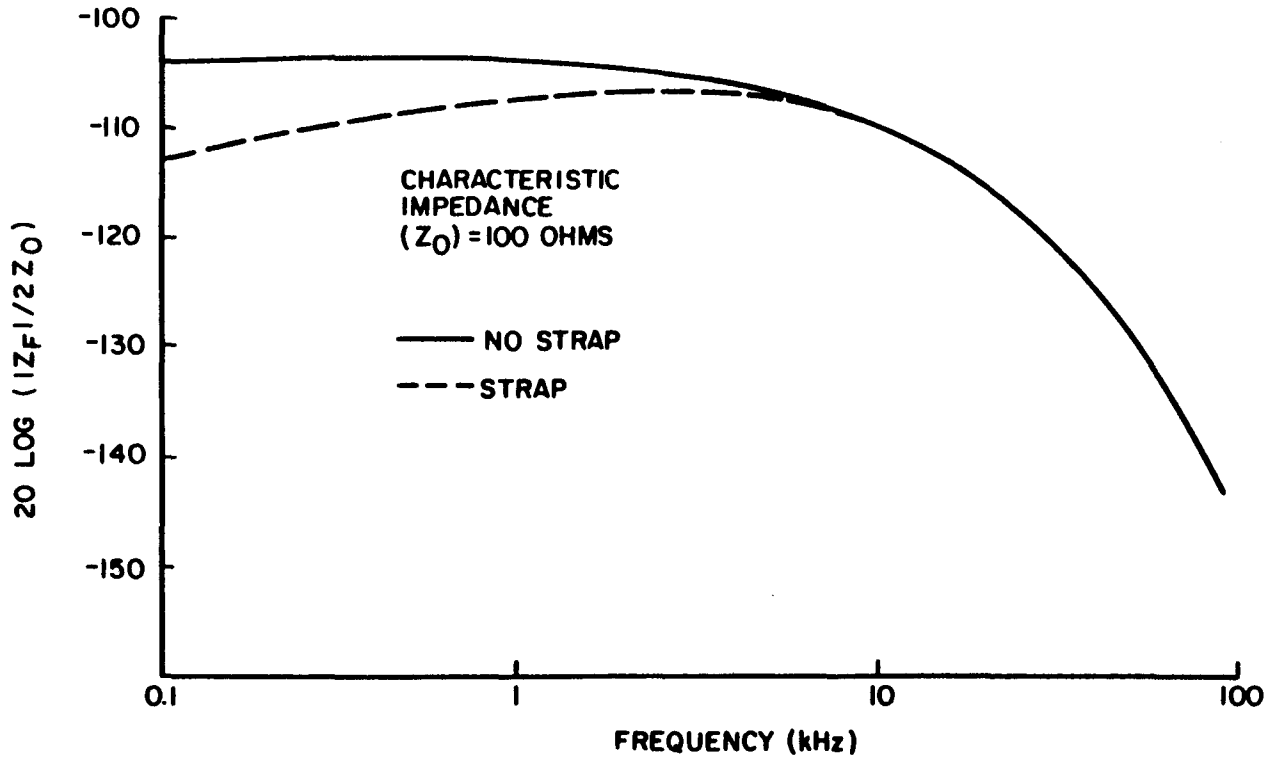

Figure 5-61. Flaw impedance (Z_F) of 0.038-millimeter (0.015-inch) wall flex-joint with and without copper strap. (Source: ref 5-17)

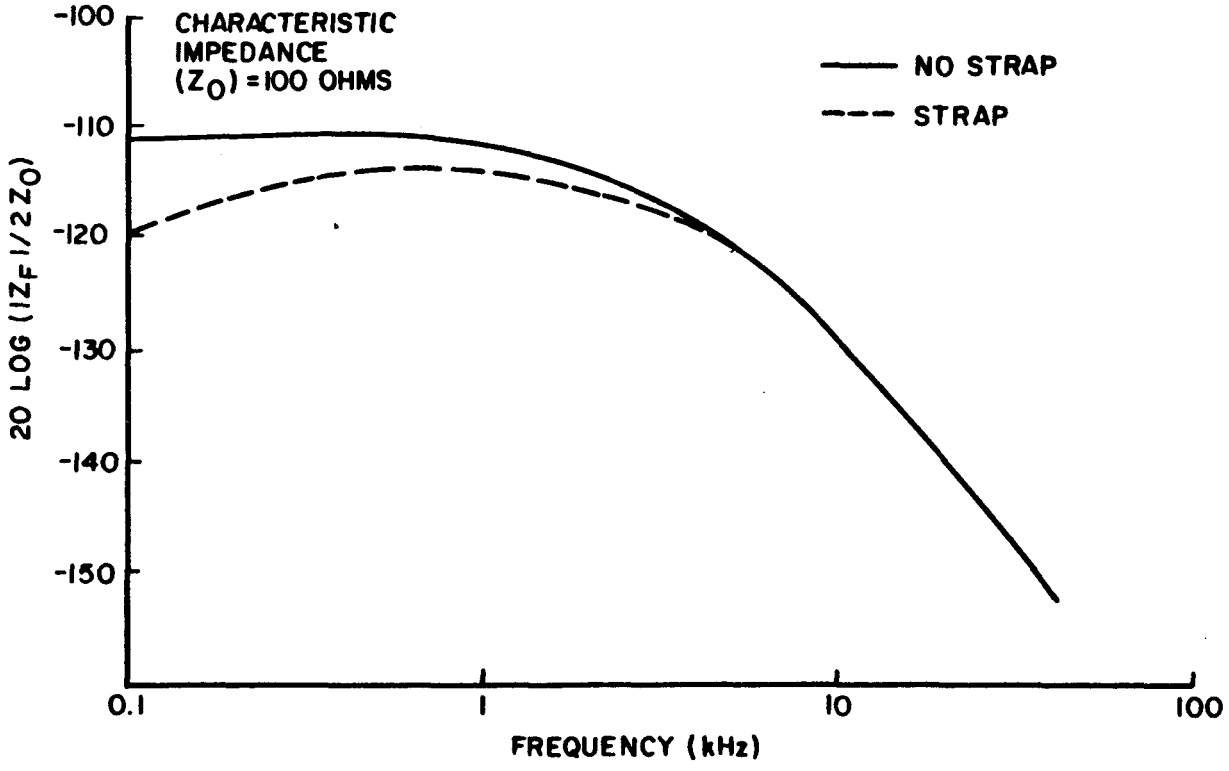

Figure 5-62. Flaw impedance (Z_F) of 0.76-millimeter (0.03-inch) wall flex-joint with and without copper strap. (Source: ref 5-17)

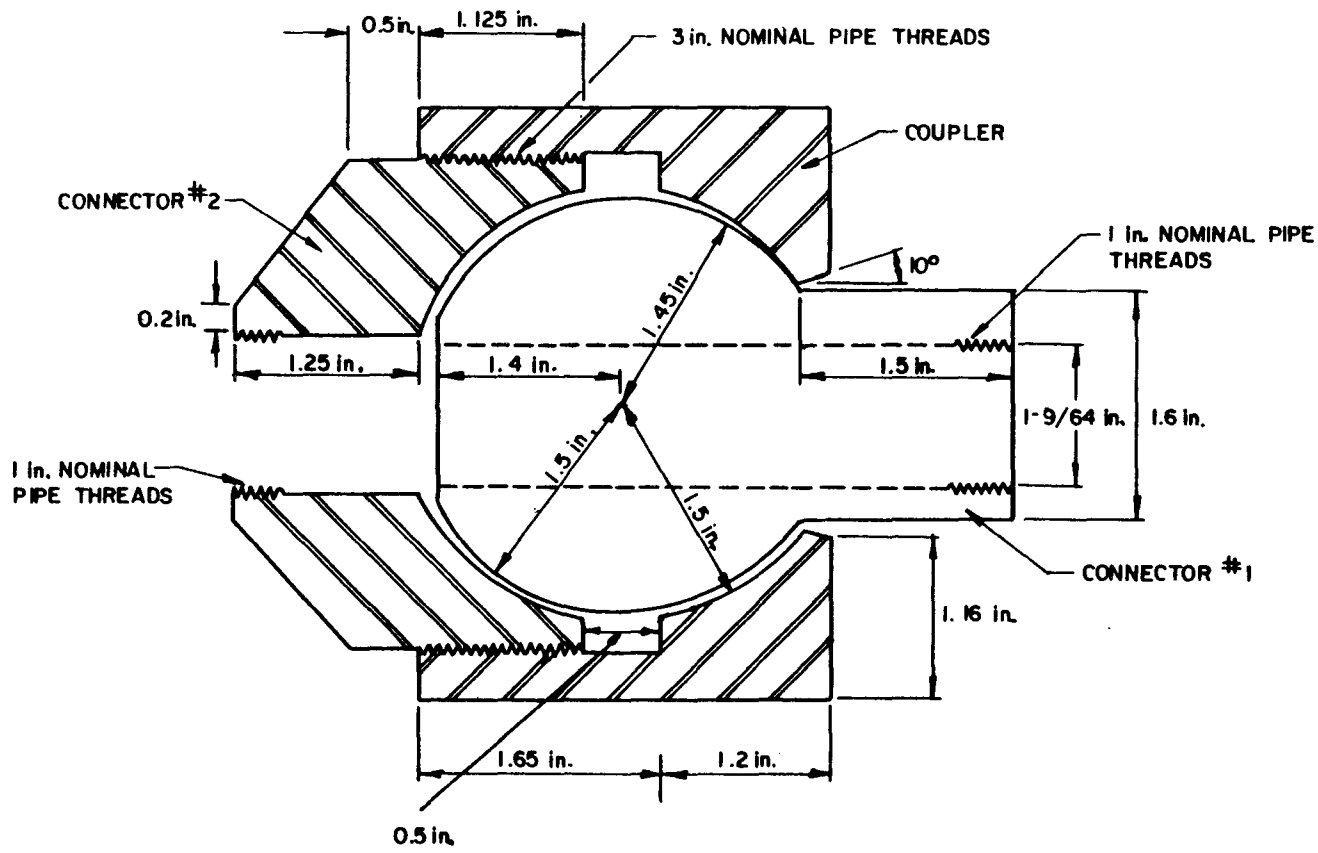

Figure 5-63. Experimental HEMP hardened union. (Source: ref 5-17)

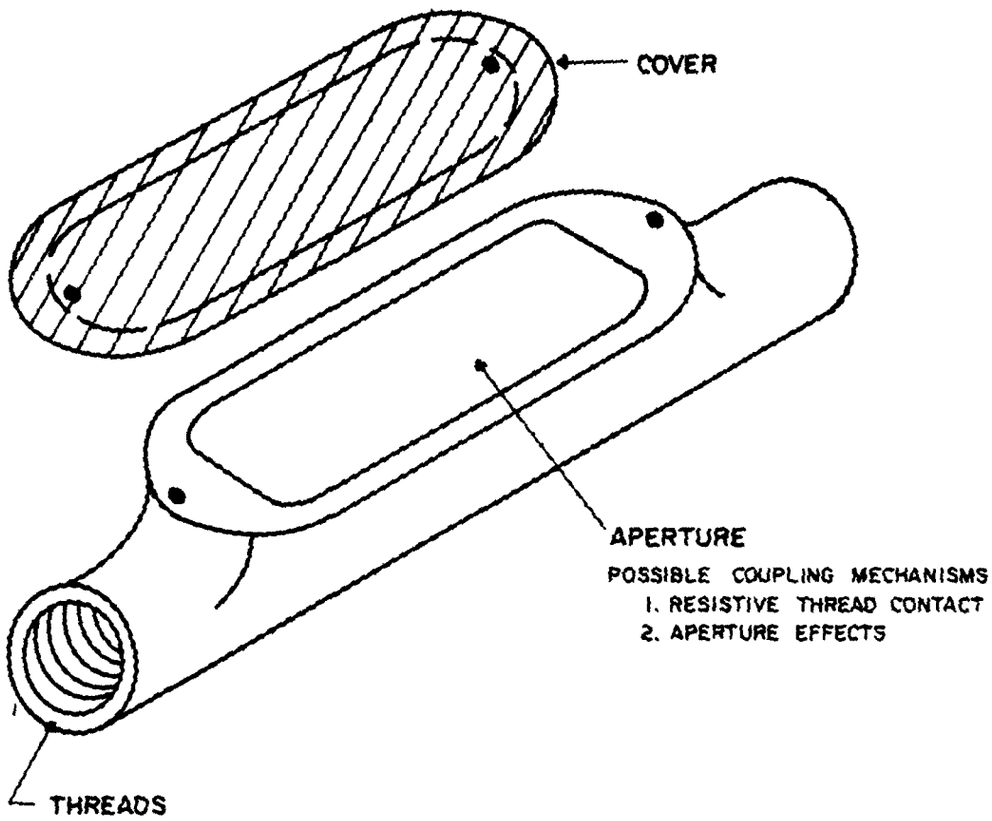

Figure 5-64. Type C conduit body. (Source: ref 5-17)

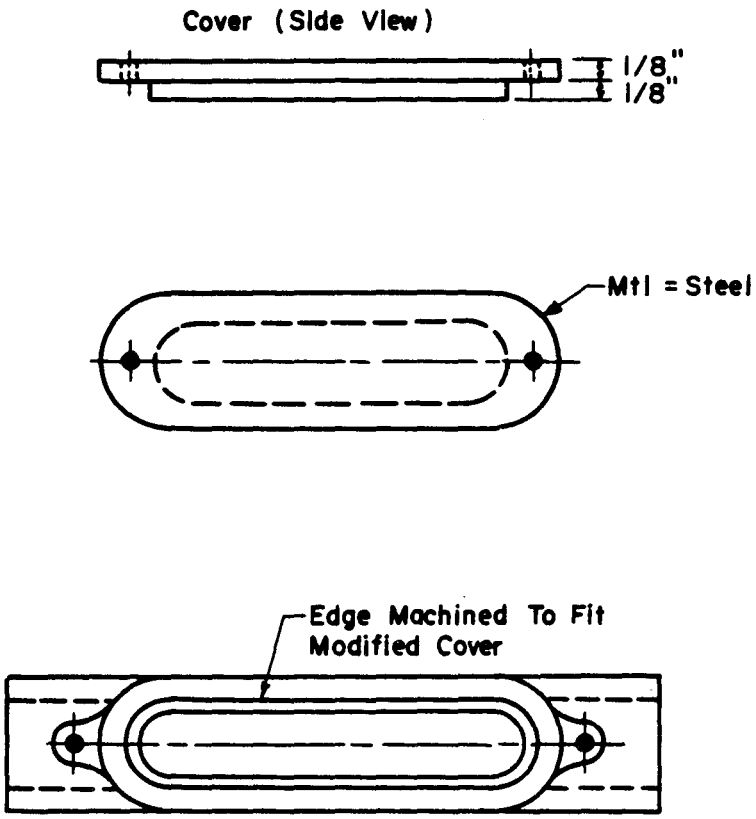

Figure 5-65. Machined conduit body cover for HEMP hardening. (Source: ref 5-17)

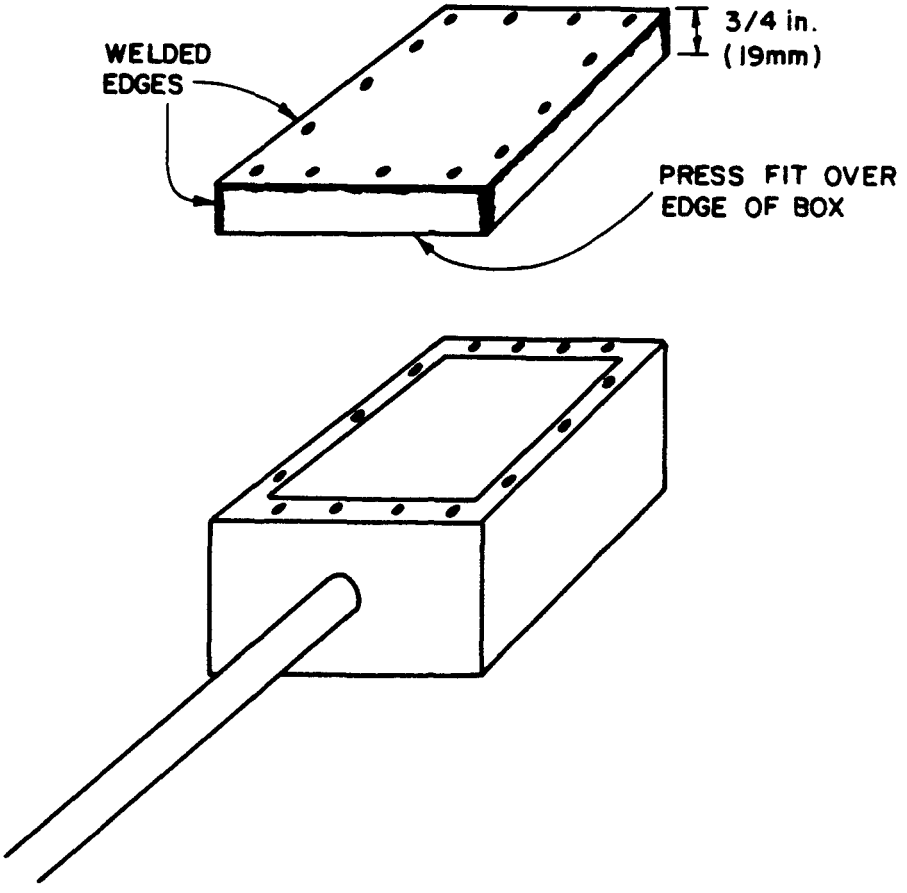

Figure 5-66. "Wrap-around" junction box cover. (Source: ref 5-17)

This page not used.

This page not used.

This page not used.

This page not used.

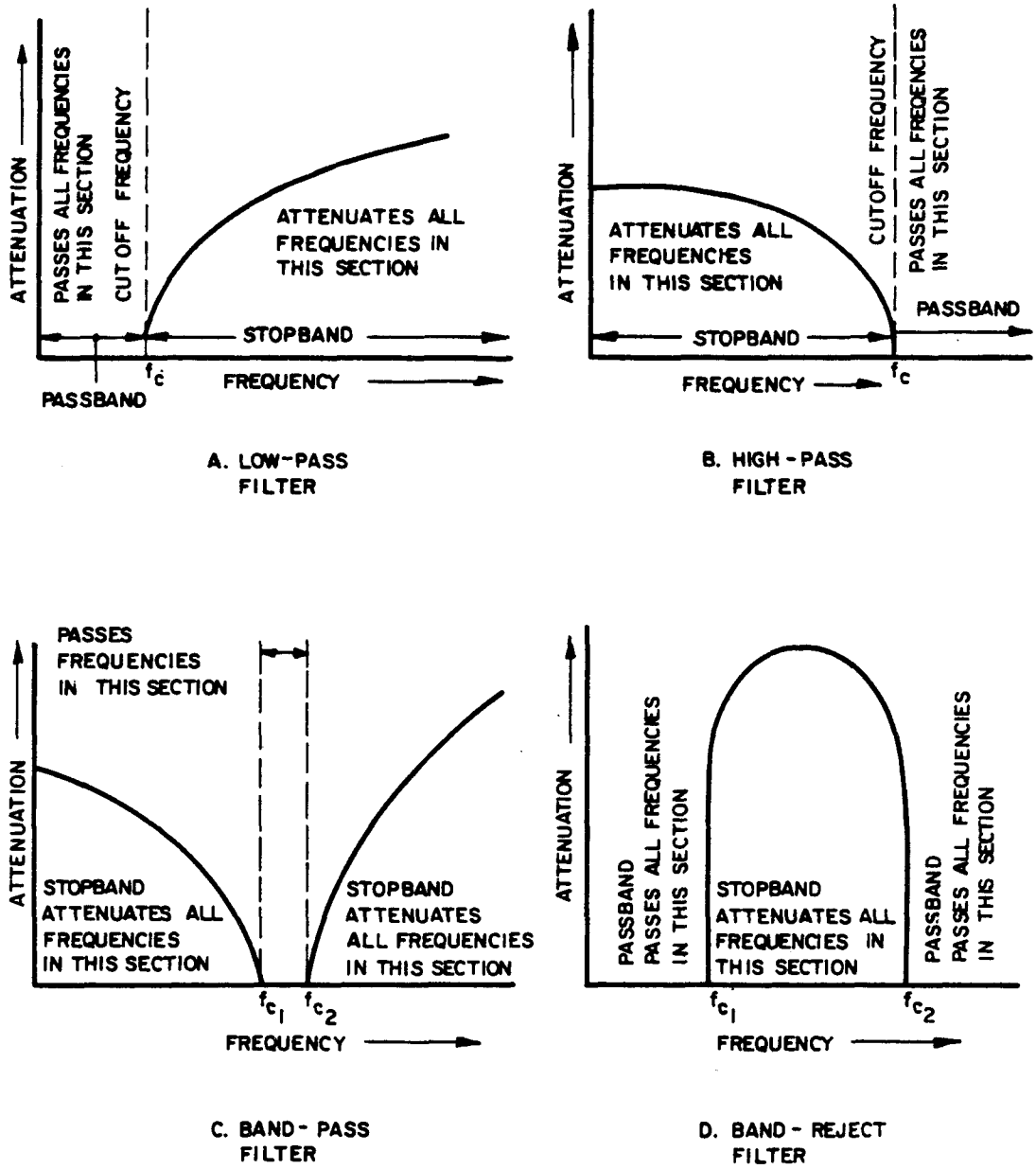

Figure 5-71. The four basic filter classes. (Source: ref 5-30)

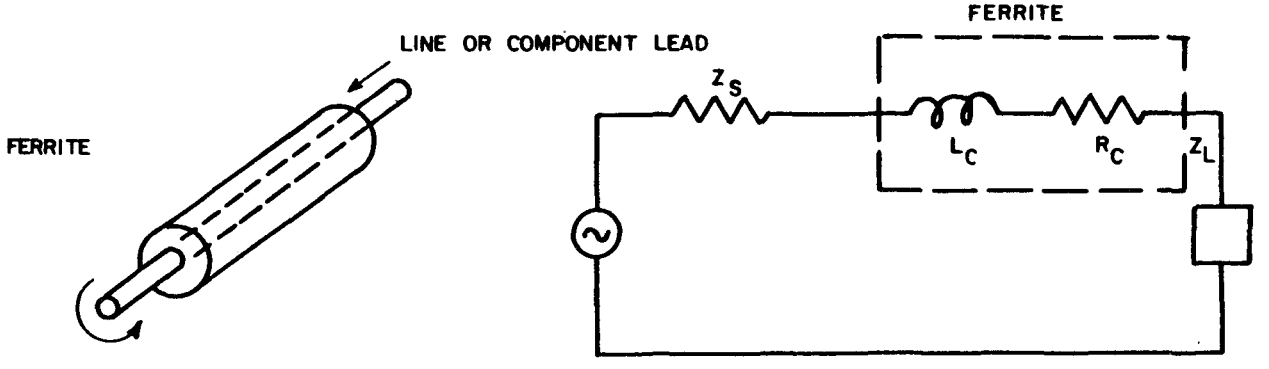

Figure 5-72. Ferrite bead on wire and ferrite bead equivalent circuit. (Source: ref 5-32)

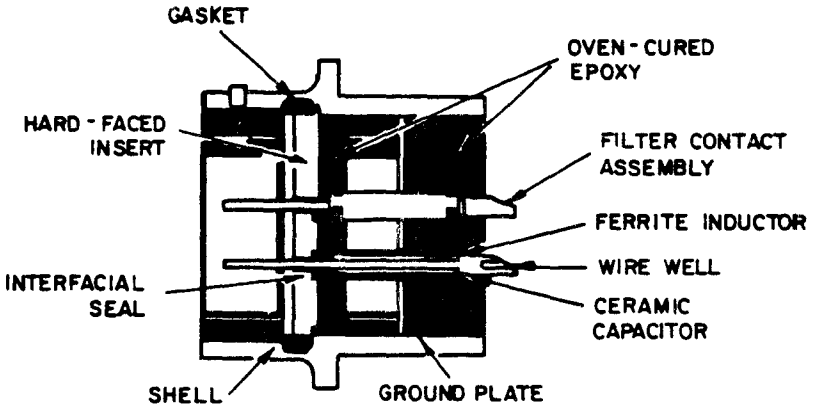

INTERNAL CONSTRUCTION OF A FILTER-PIN CONNECTOR CONTAINING PASSIVE ELEMENTS

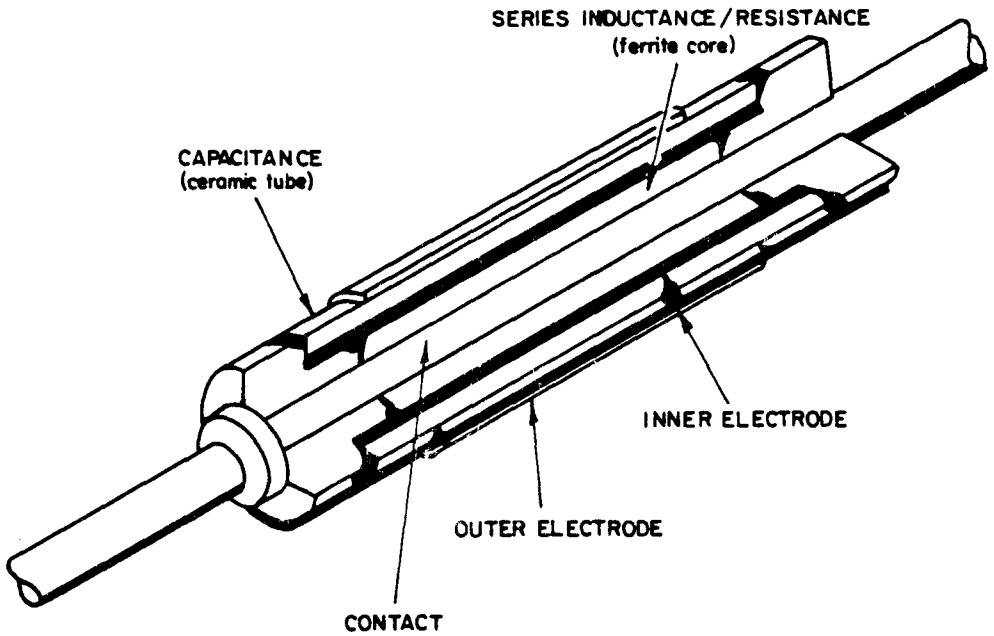

FILTER-PIN CONSTRUCTION CONTAINING PASSIVE ELEMENTS

Figure 5-73. Filter pin connector design. (Source: ref 5-7)

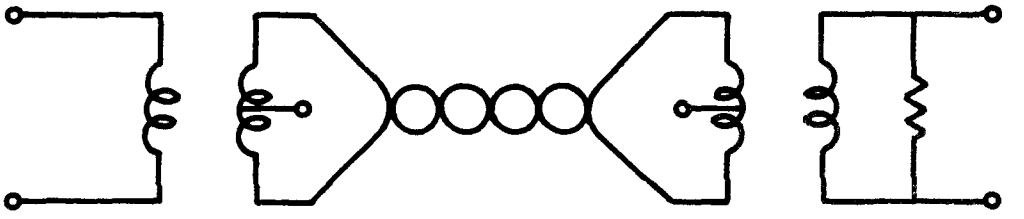

SHUNT CONFIGURATION

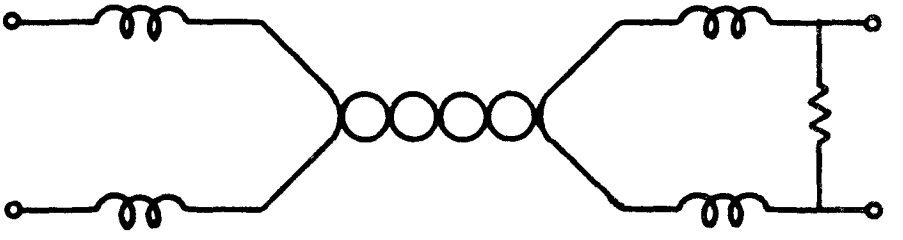

SERIES CONFIGURATION

Figure 5-74. Shunt and series transformer wiring configuration. (Source: ref 5-32)

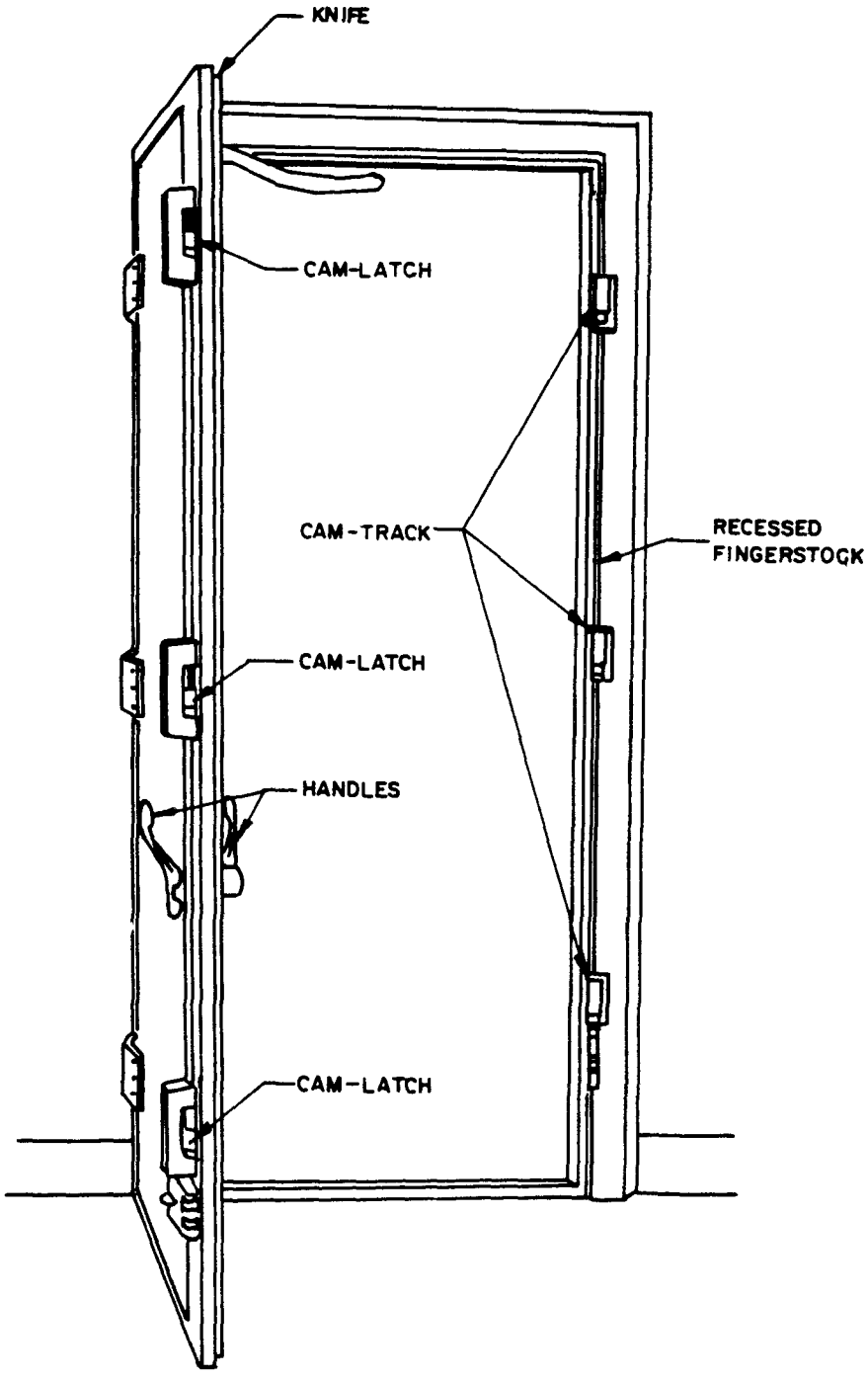

Figure 5-75. Typical shielded door closures. (sheet 1 of 2)

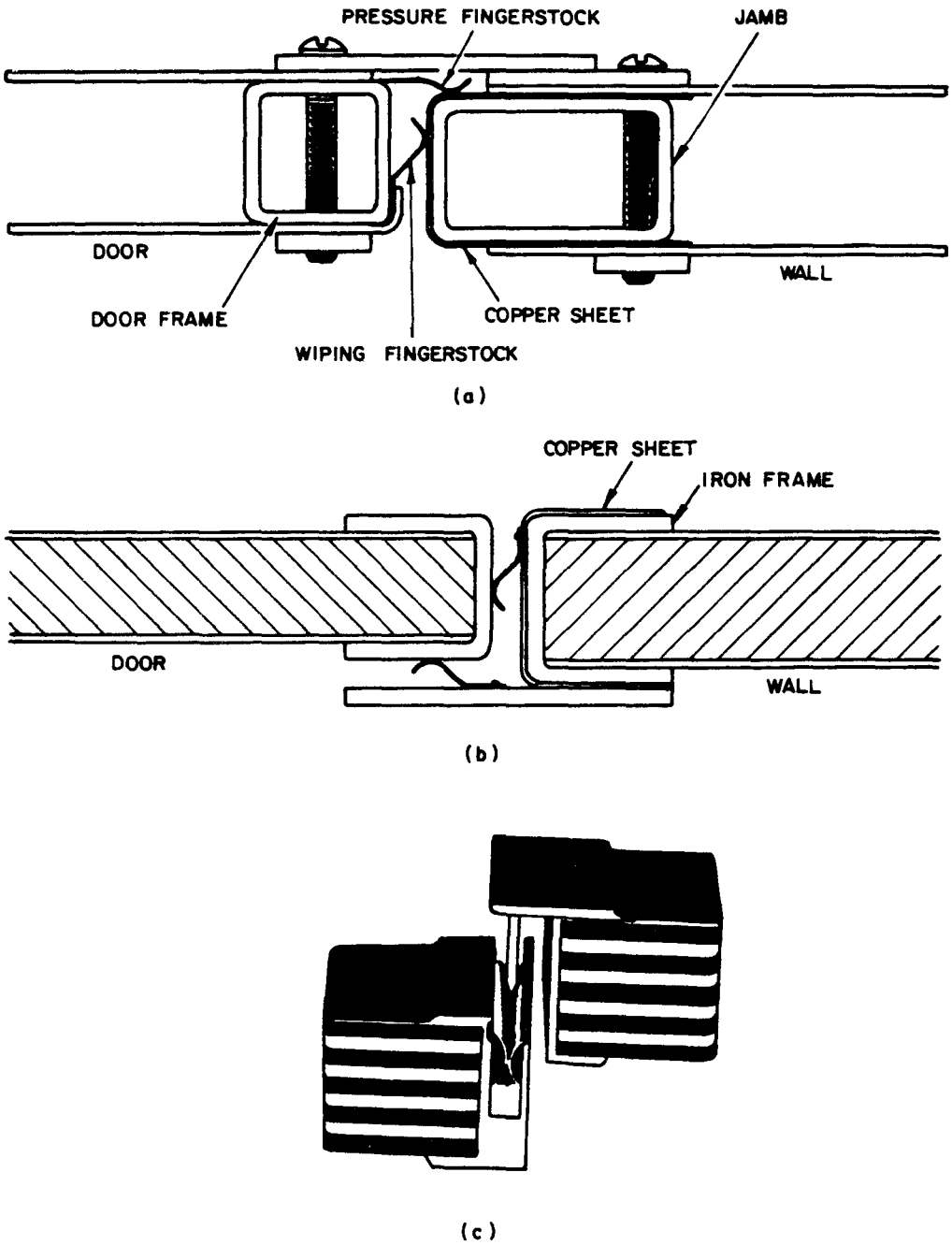

Figure 5-75. Typical shielded door closures. (sheet 2 of 2)

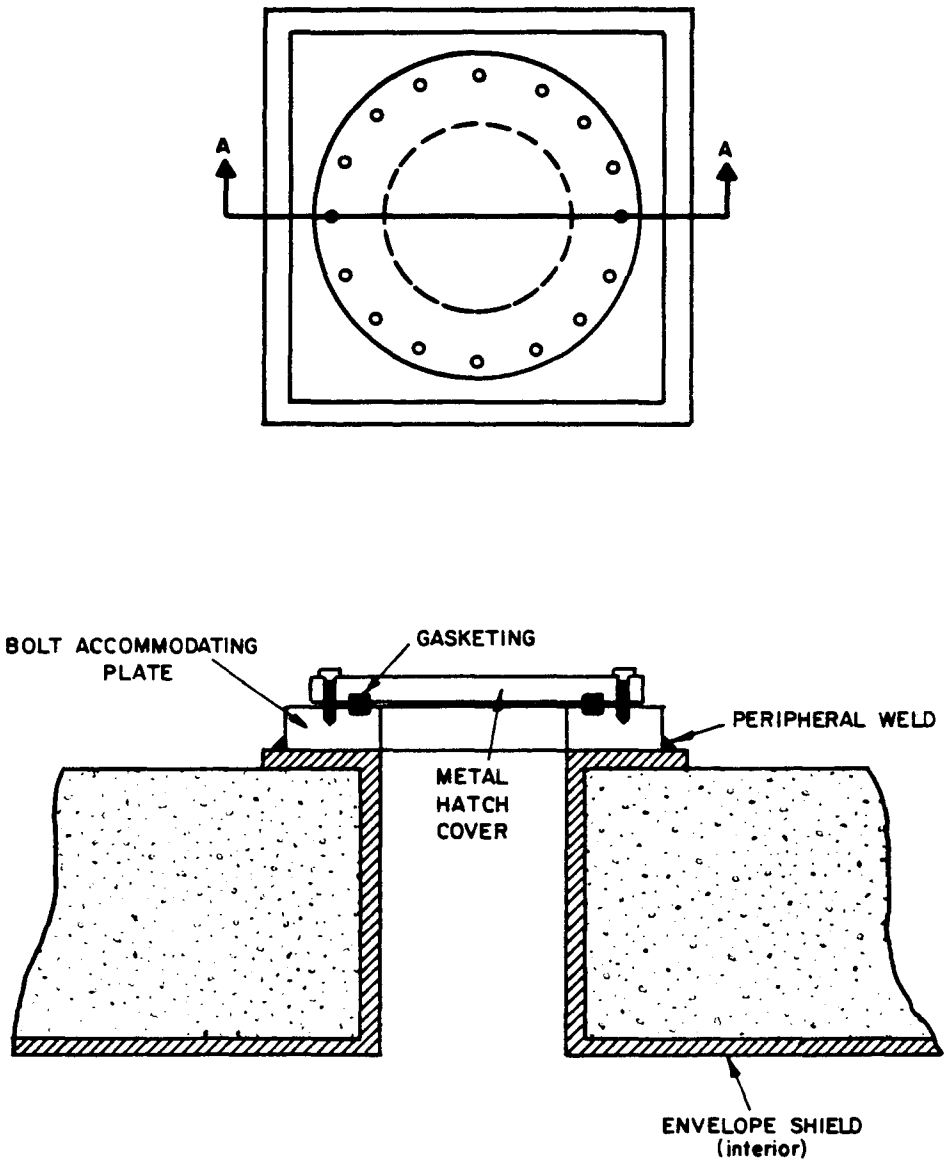

Figure 5-76. Emergency escape hatch configuration. (Source: ref 5-7)

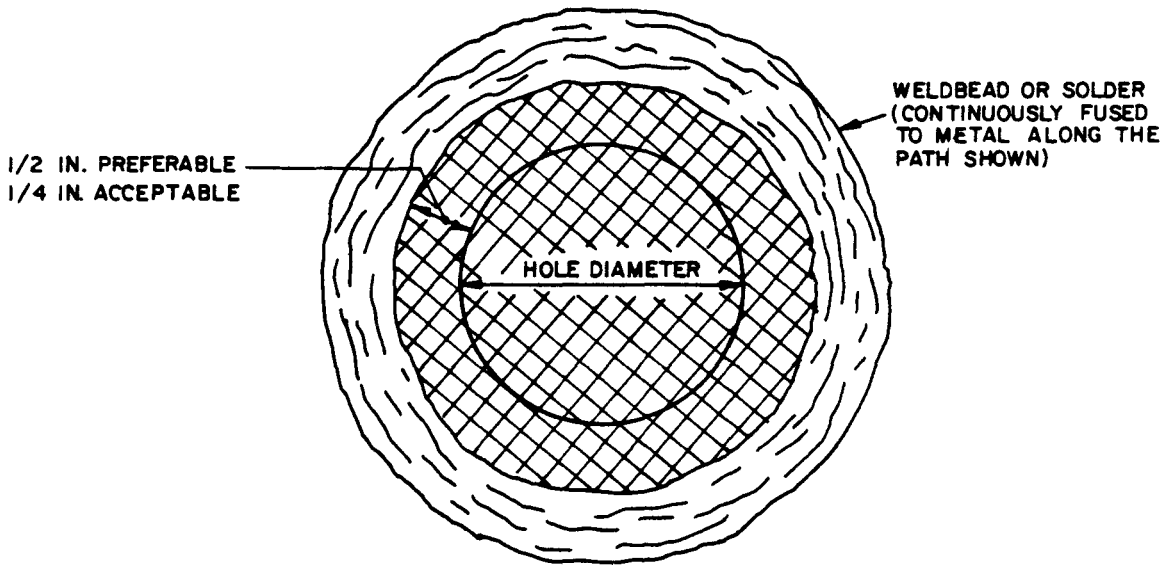

Figure 5-77. Typical welded screen installation over a ventilation aperture. (Source: ref 5-3)

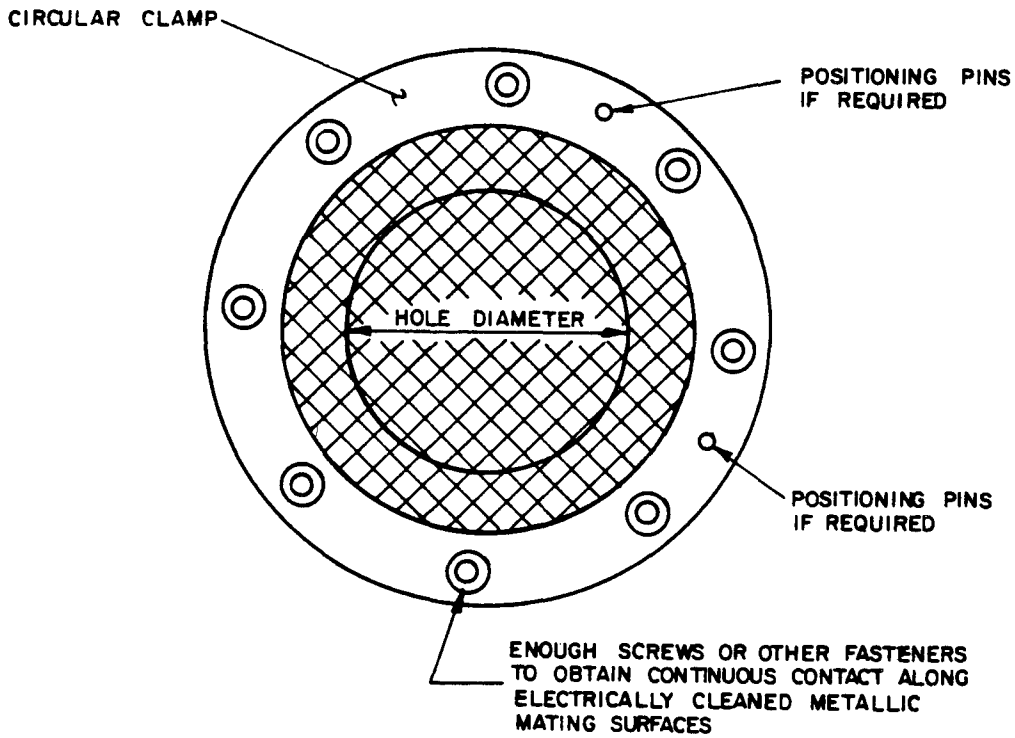

Figure 5-78. Typical clamped screen installation over a ventilation aperture. (Source: ref 5-3)

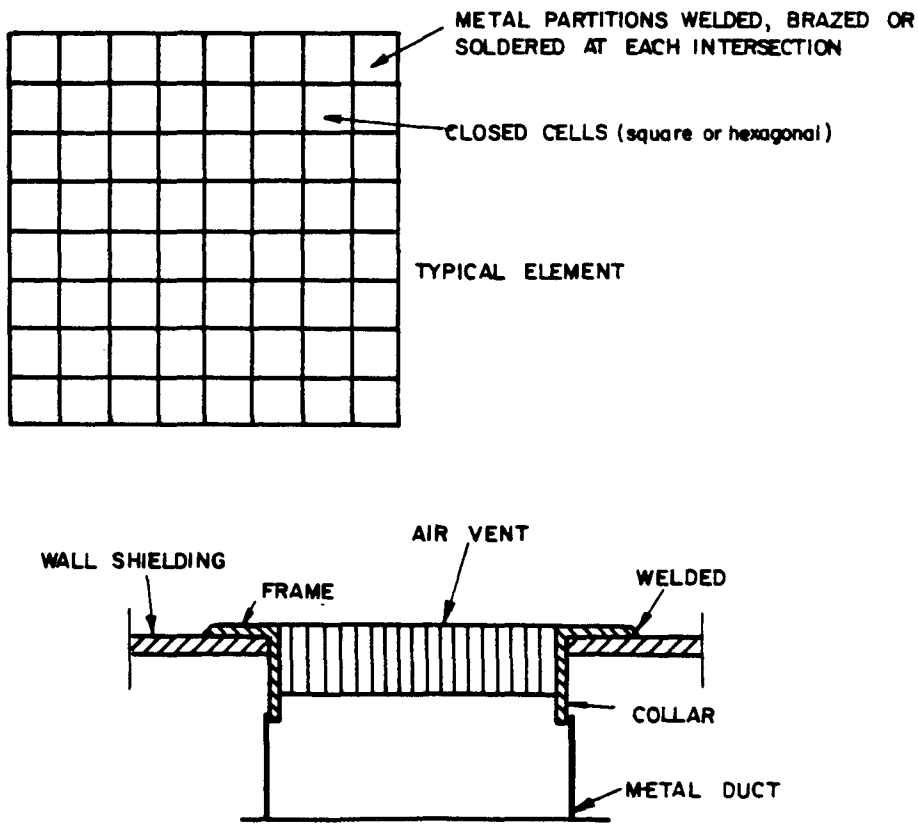

Figure 5-79. Honeycomb material for shielding air vents. (Source: ref 5-7)

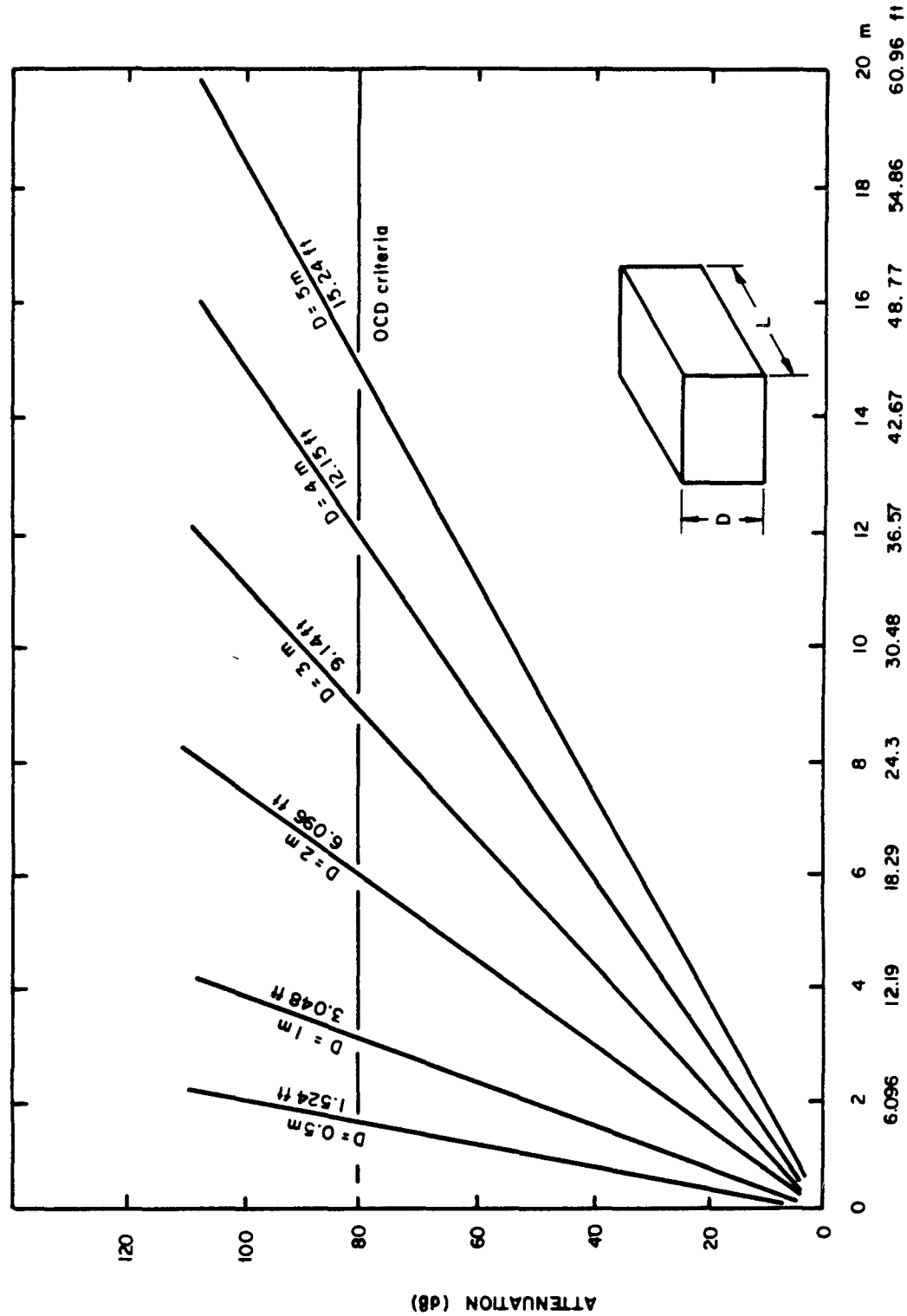

Figure 5-80. Waveguide attenuation as a function of waveguide dimensions. (Source: ref 5-28)

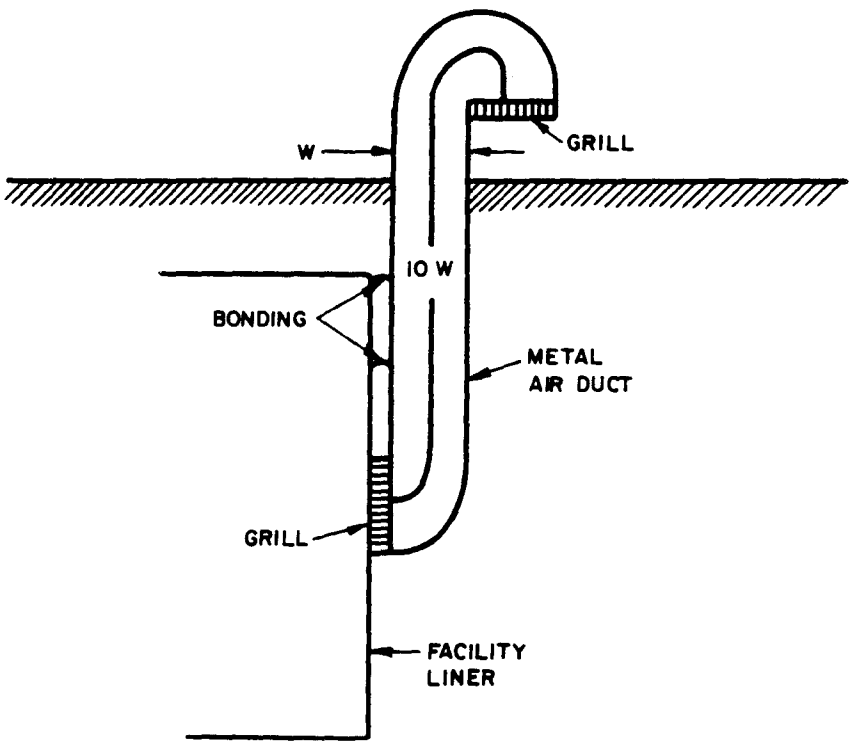

Figure 5-81. Air vent HEMP protection design. (Source: ref 5-7)

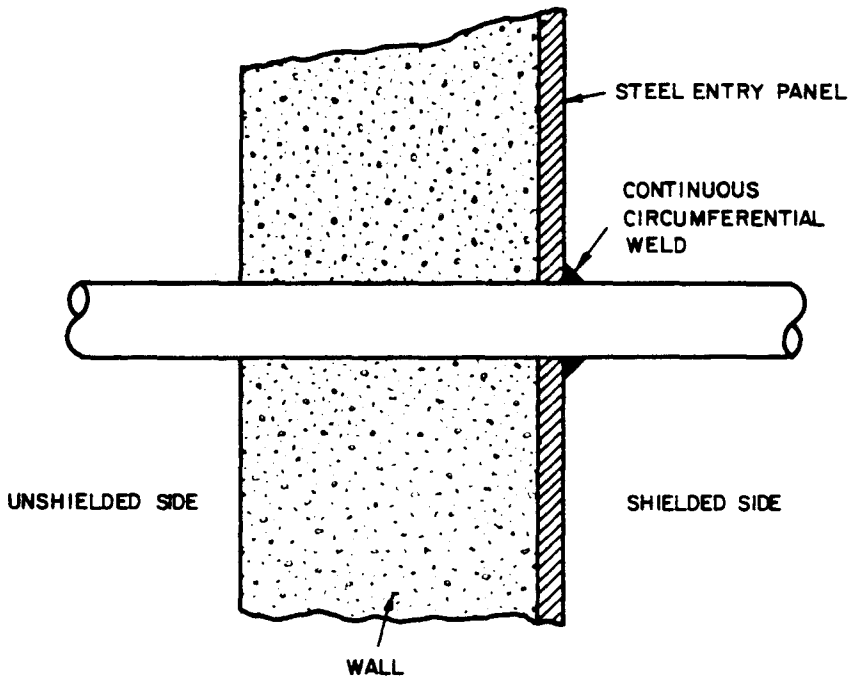

Figure 5-82. Conduit or metal pipe penetration design. (Source: ref 5-7)

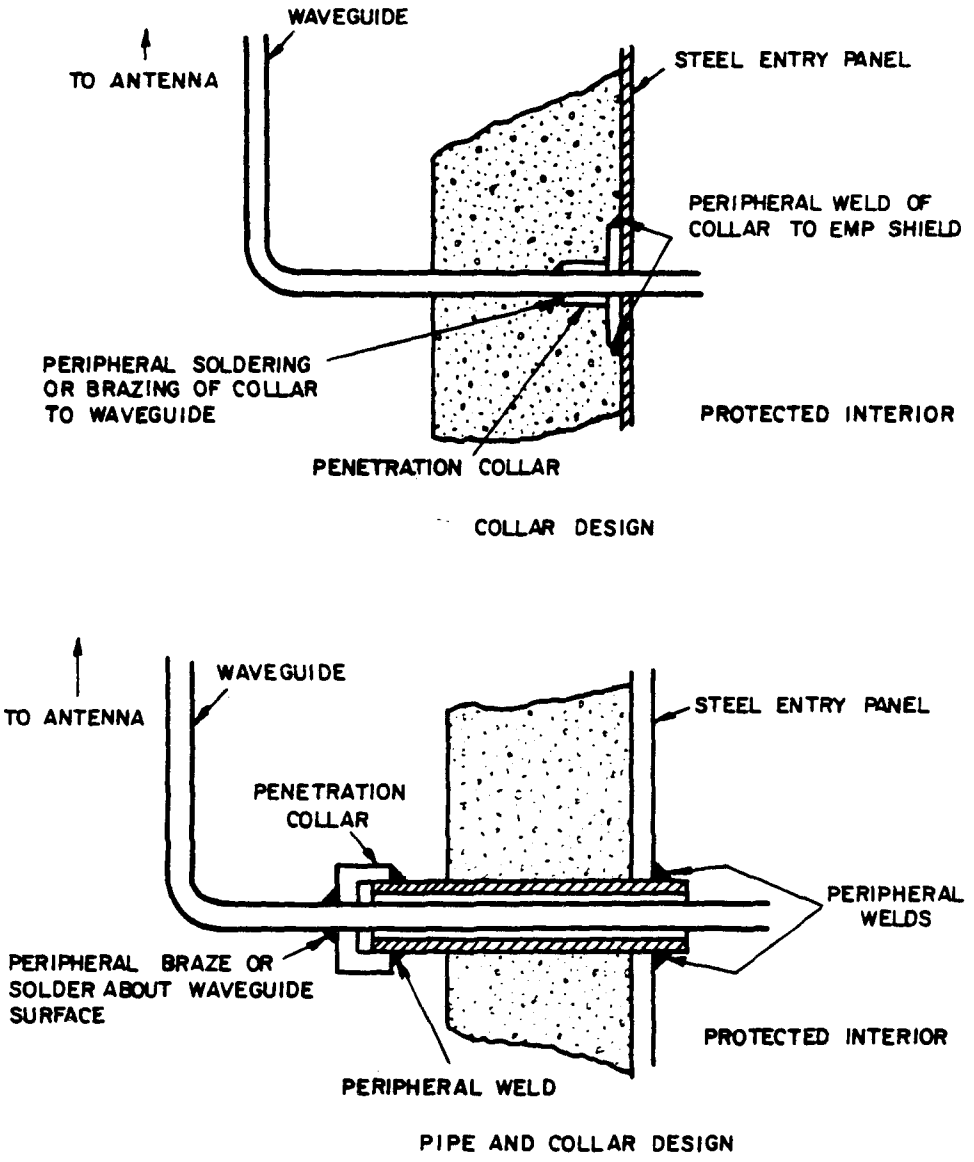

Figure 5-83. HEMP protection for waveguide entry. (Source: ref 5-7)

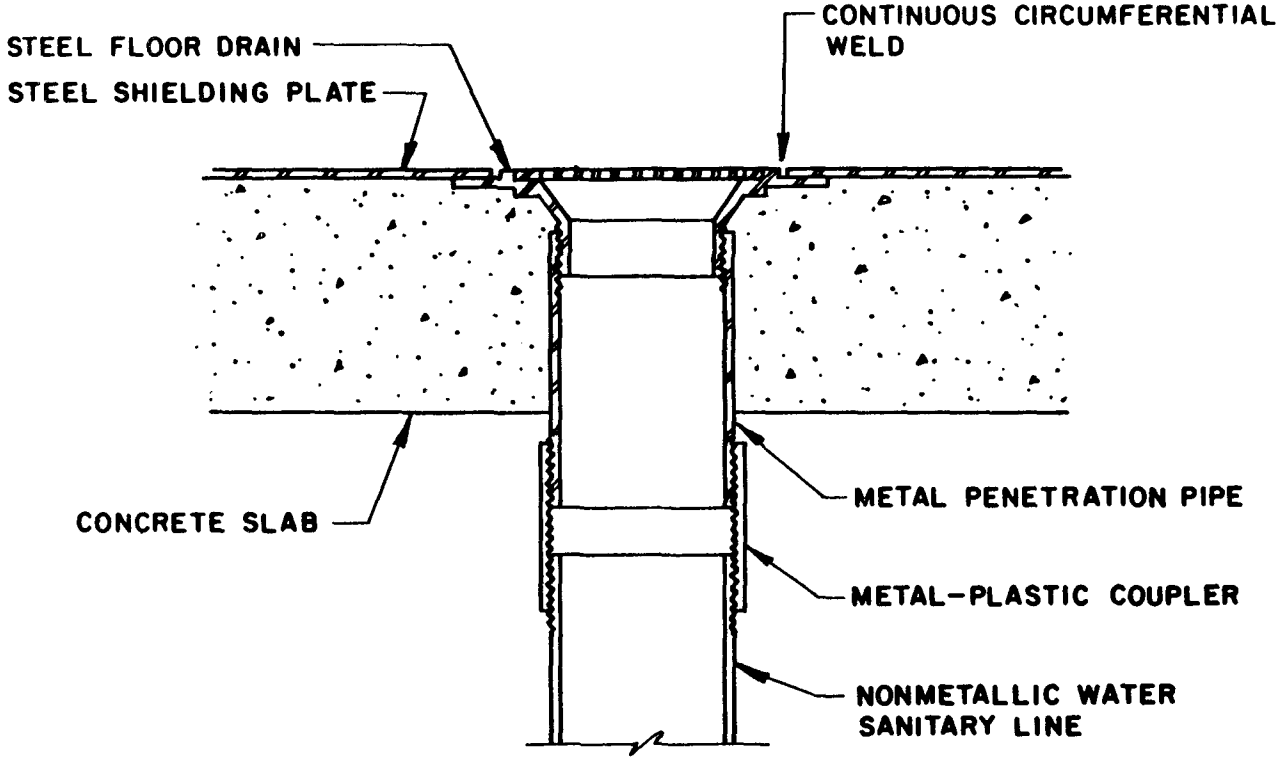

FLOOR DRAIN AND PIPE PENETRATION

Figure 5-84. Plastic pipe termination practices. (Source: ref 5-7) (sheet 1 of 2)

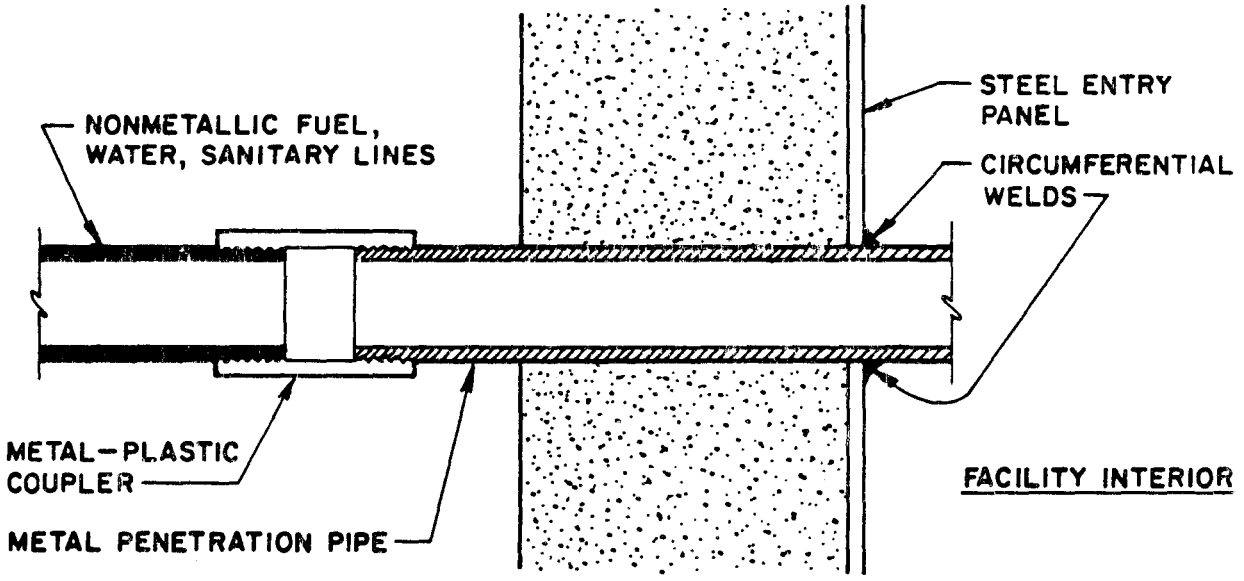

PIPE TERMINATION

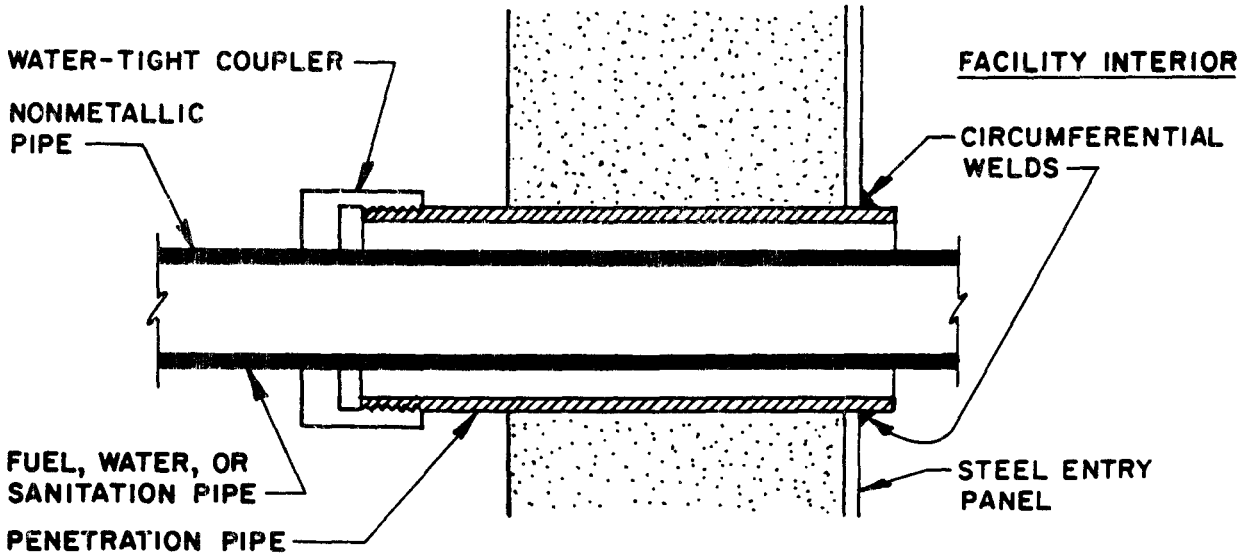

PIPE FEEDTHROUGH

Figure 5-84. Plastic pipe termination practices. (Source: ref 5-7) (sheet 2 of 2)

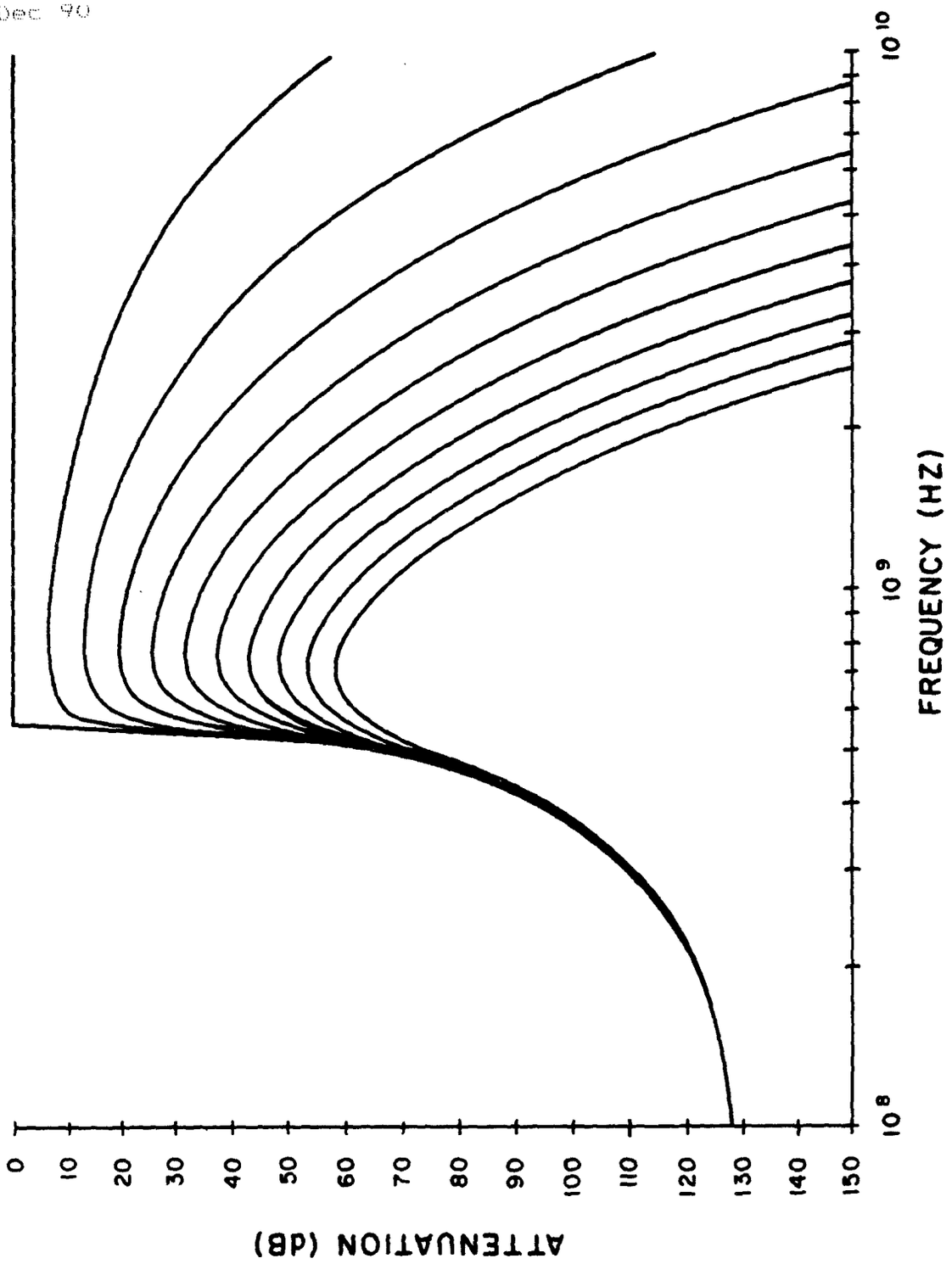

Figure 5-85. Theoretical attenuation of the TE_{11} mode for a 1.5-inch (3.8-centimeter) internal diameter pipe with distilled water for various loss tangents. (Source: ref 5-20)

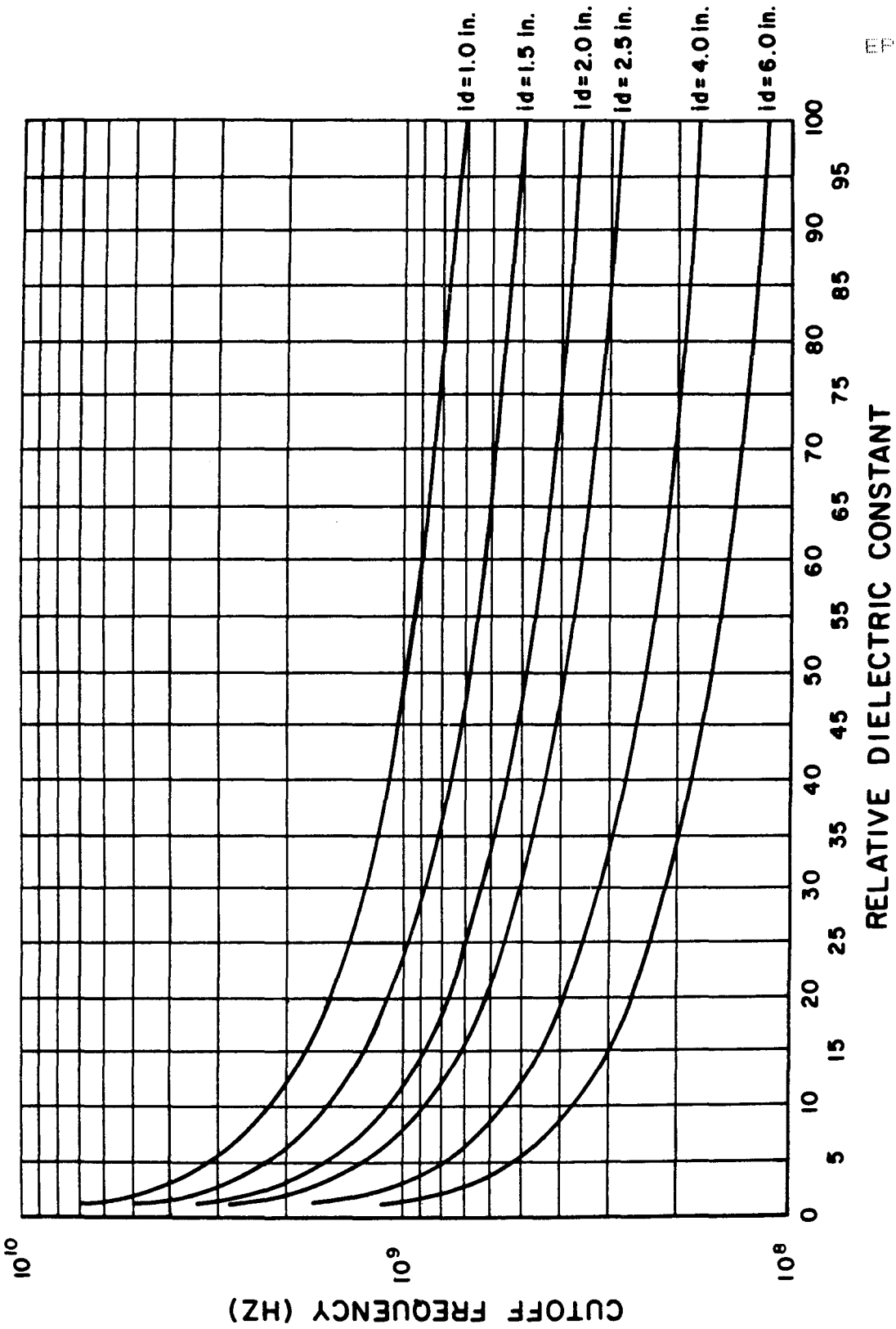

Figure 5-86. Cutoff frequency versus relative dielectric constant for various pipe diameters. (Source: ref 5-20)

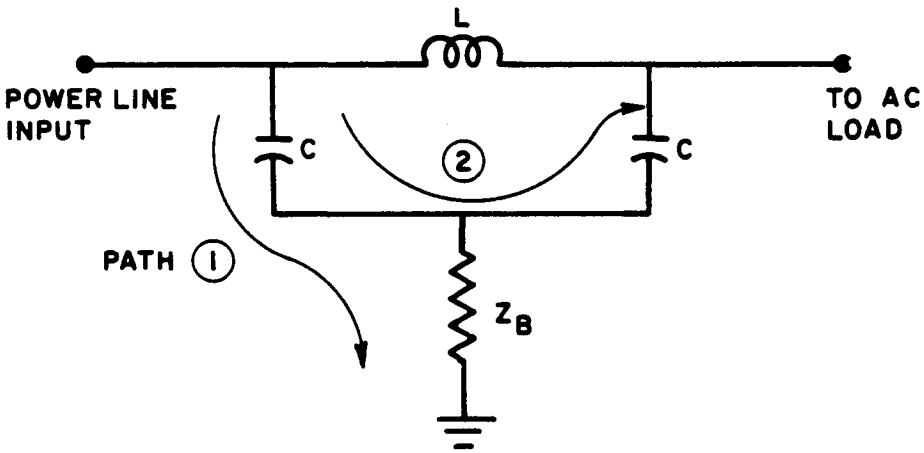

Figure 5-87. Effects of poor bonding on the performance of a power line filter. (Source: ref 5-6)

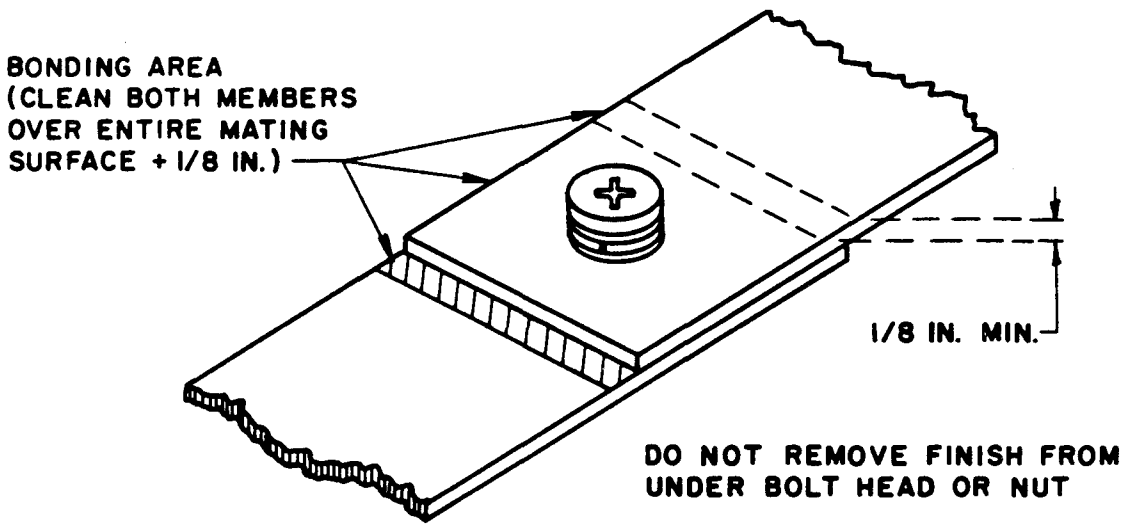

Figure 5-88. Bolted bond between flat bars. (Source: ref 5-6)

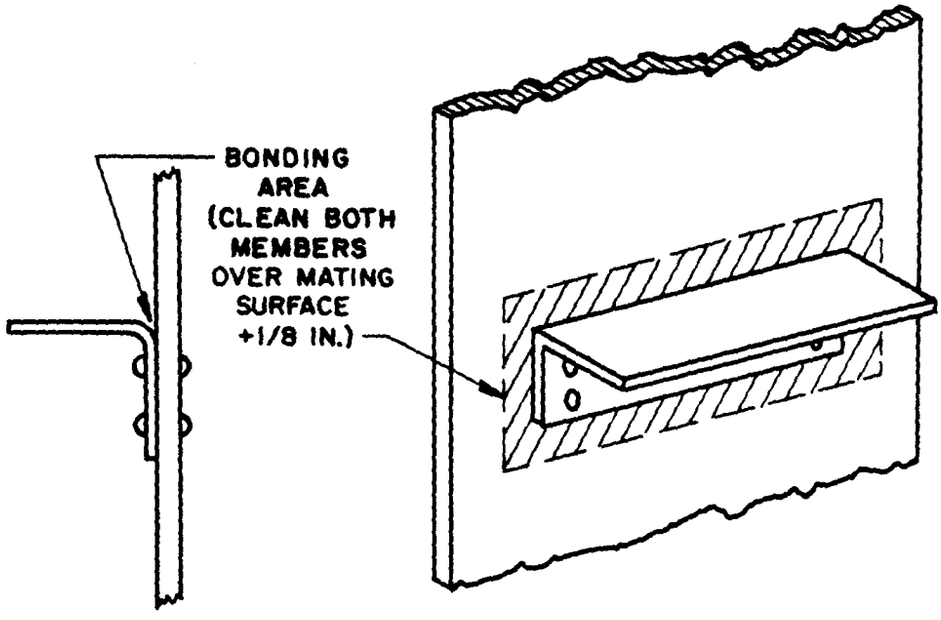

Figure 5-89. Bracket installation (bolt). (Source: ref 5-6)

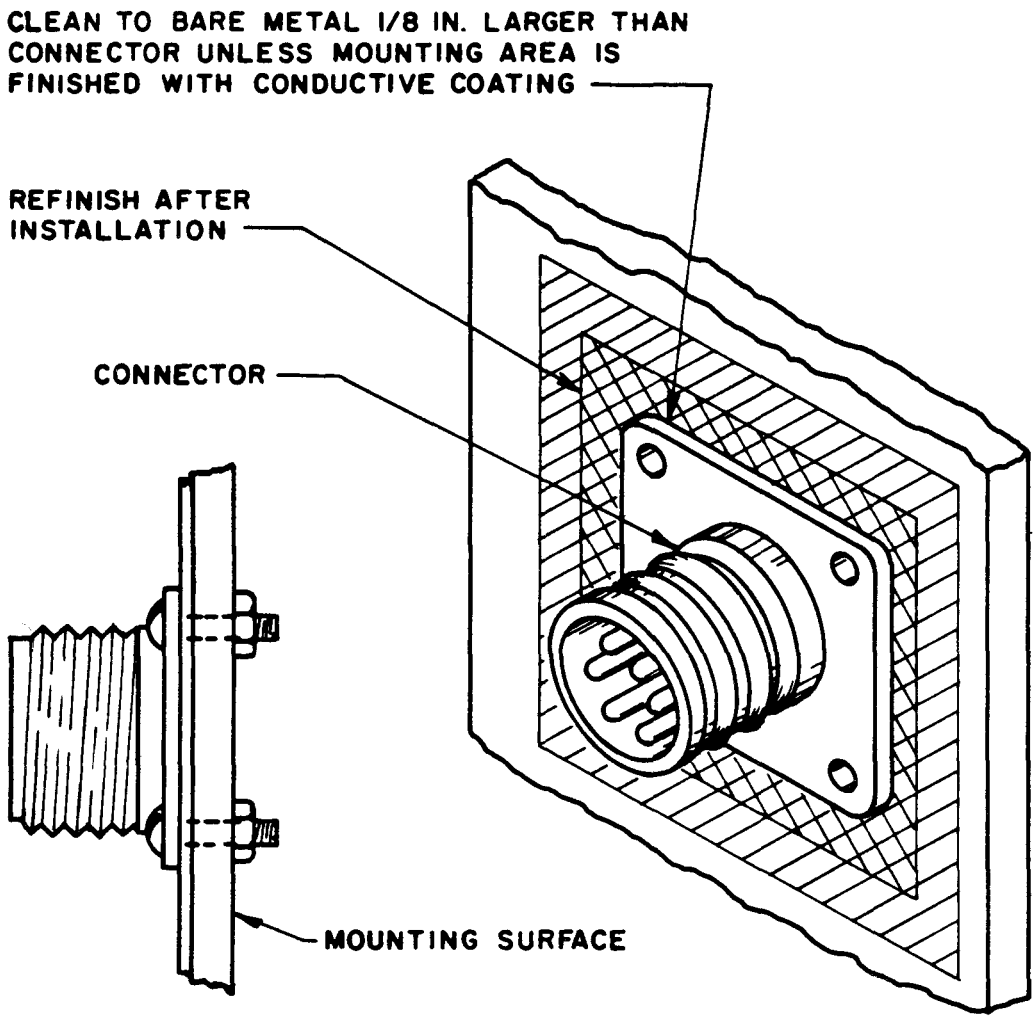

Figure 5-90. Bonding of connector to mounting surface. (Source: ref 5-6)

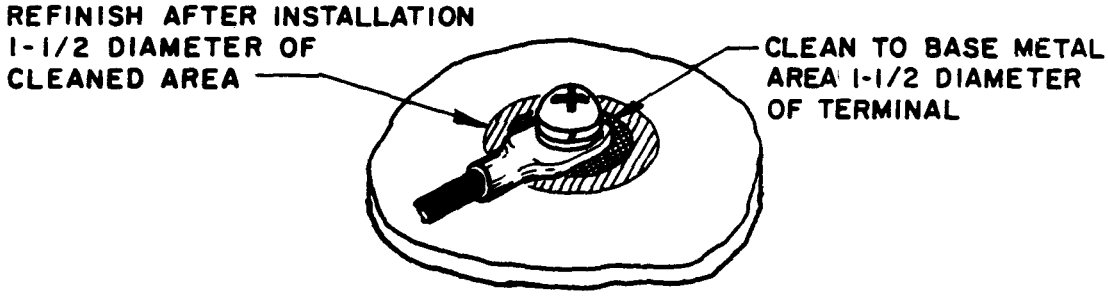

Figure 5-91. Bolting of bonding jumpers to flat surface. (Source: ref 5-6)

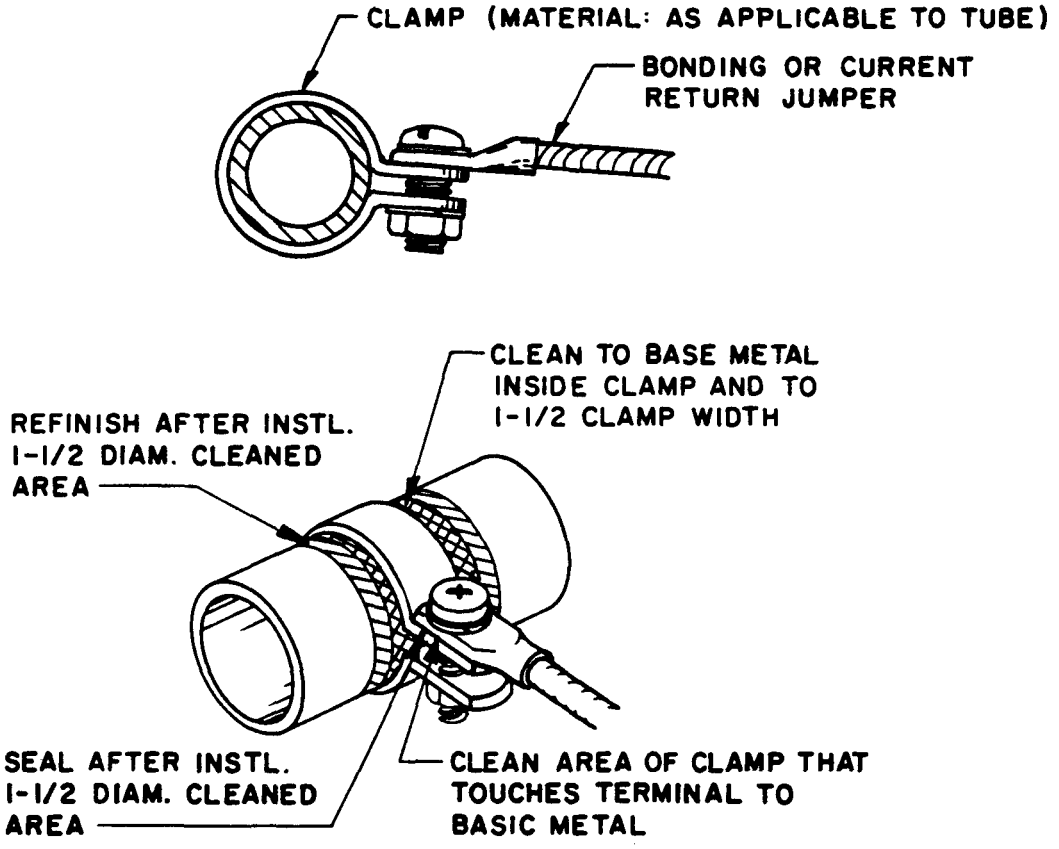

Figure 5-92. Bonding to rigid conduit. (Source: ref 5-6)

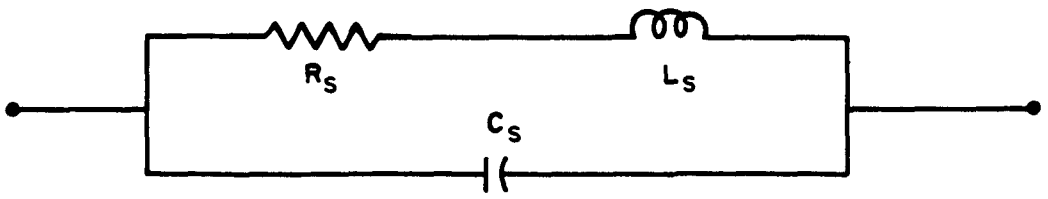

Figure 5-93. Equivalent circuit for bonding strap. (Source: ref 5-6)

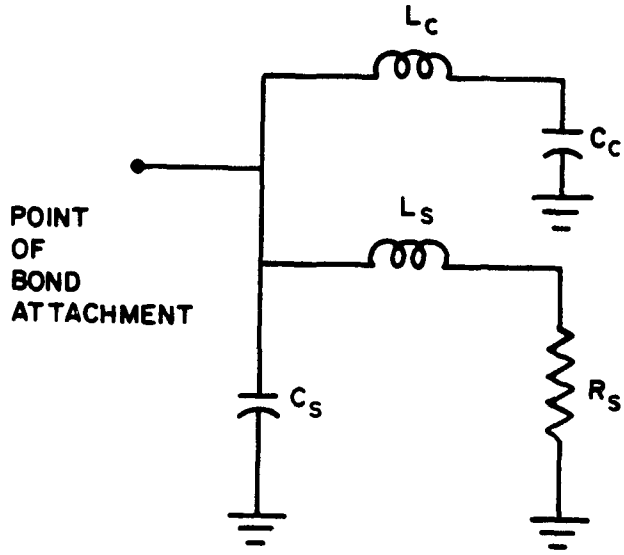

Figure 5-94. True equivalent circuit of a bonded system. (Source: ref 5-6)

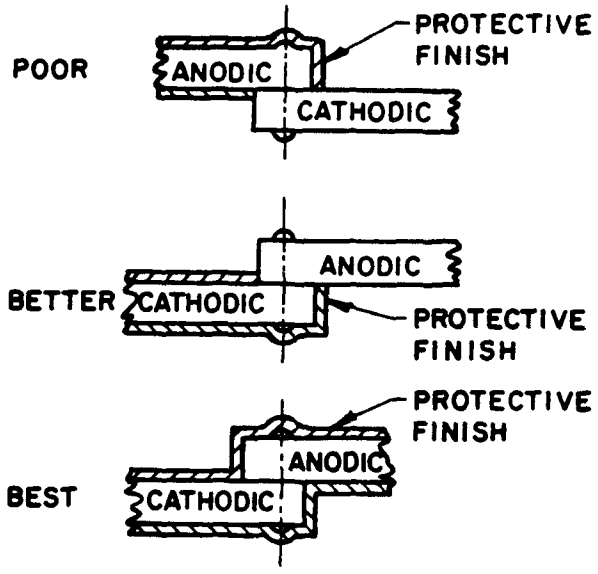

Figure 5-95. Techniques for protecting bonds between dissimilar metals. (Source: ref 5-6)

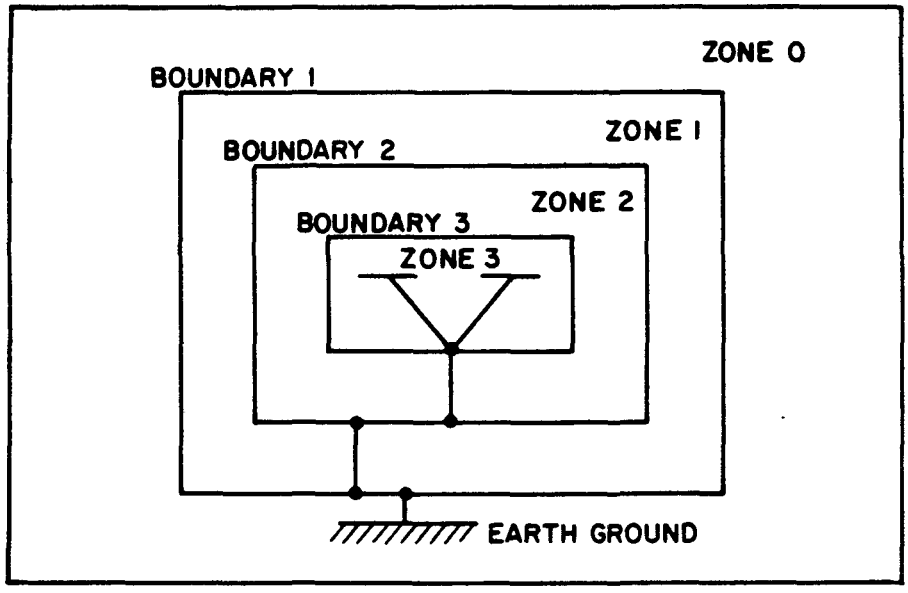

Figure 5-96. Zonal grounding.

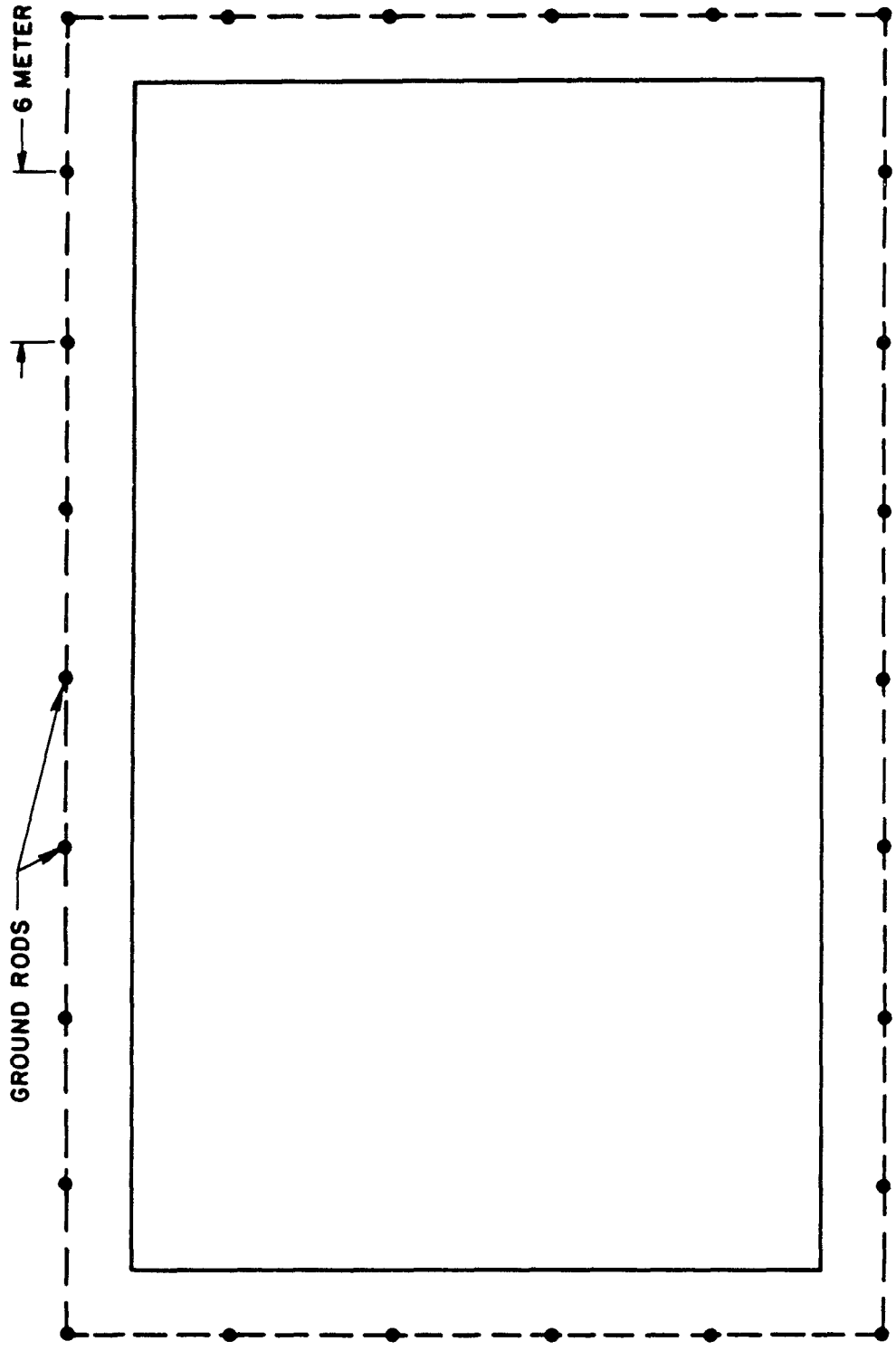

Figure 5-97. Minimum earth electrode system configuration for rectangular-shaped facility. (Source: ref 5-6)

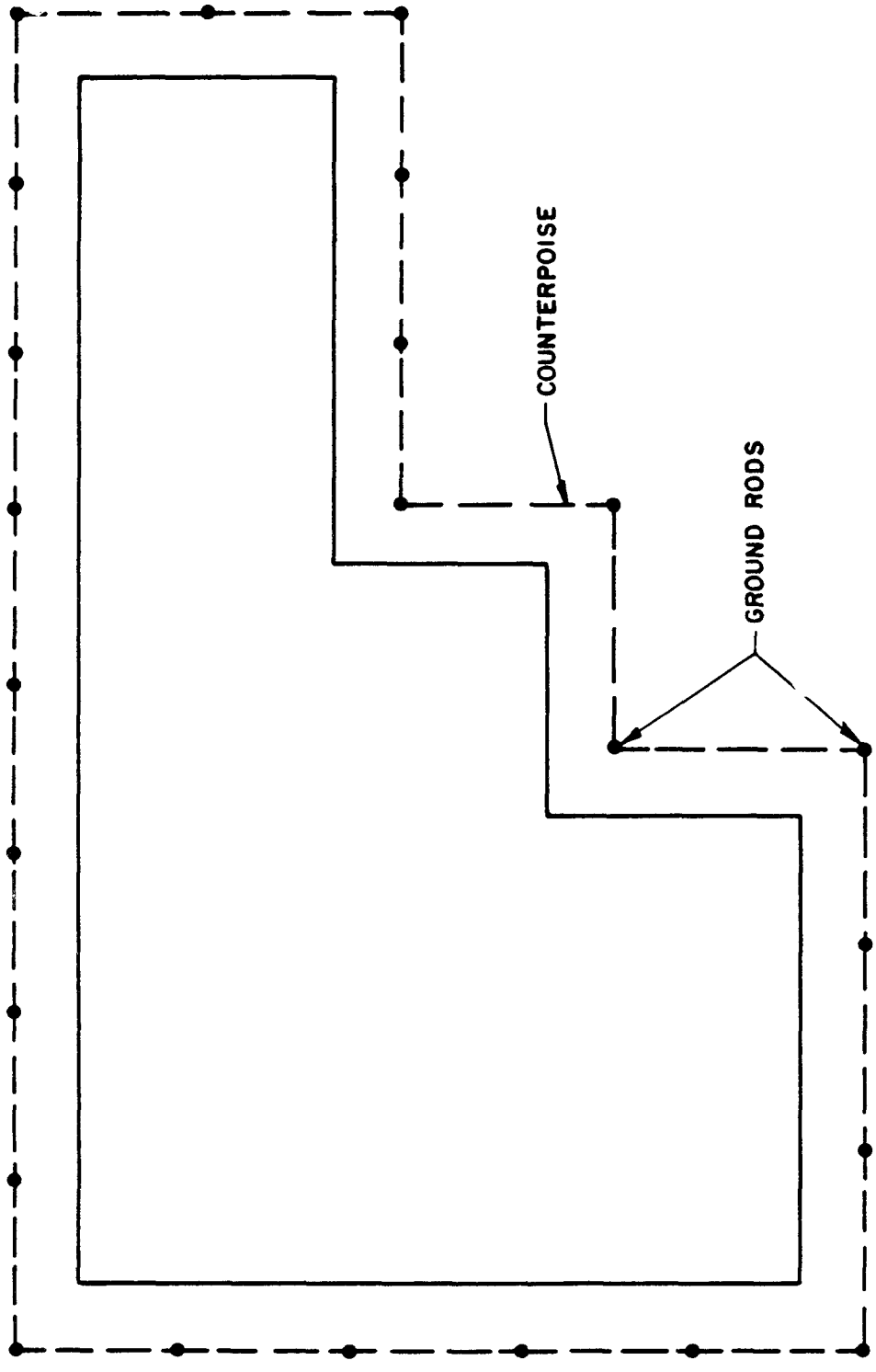

Figure 5-98. Electrode configuration for irregular-shaped facility. (Source: ref 5-6)

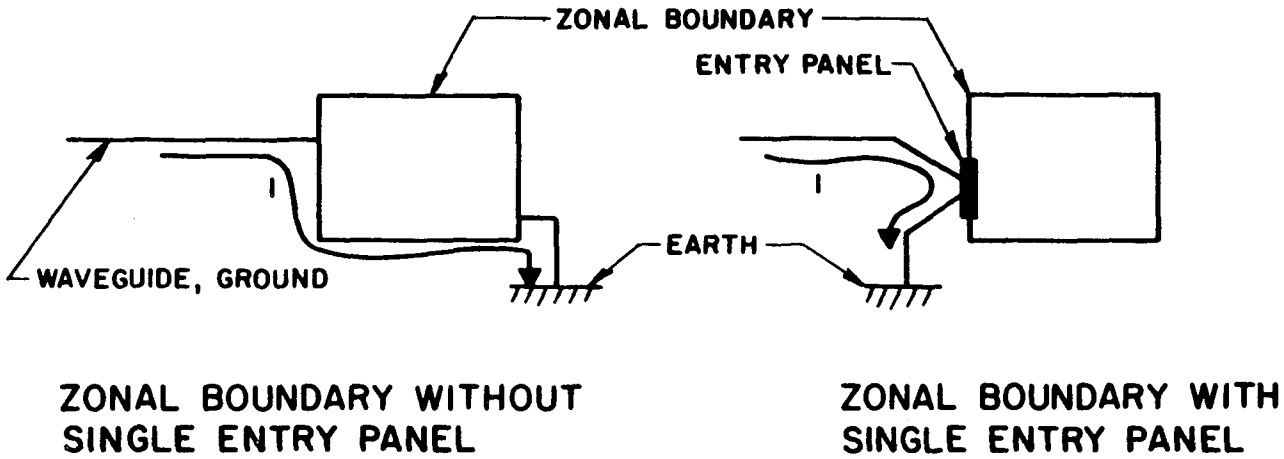

Figure 5-99. Current path on zonal boundaries.

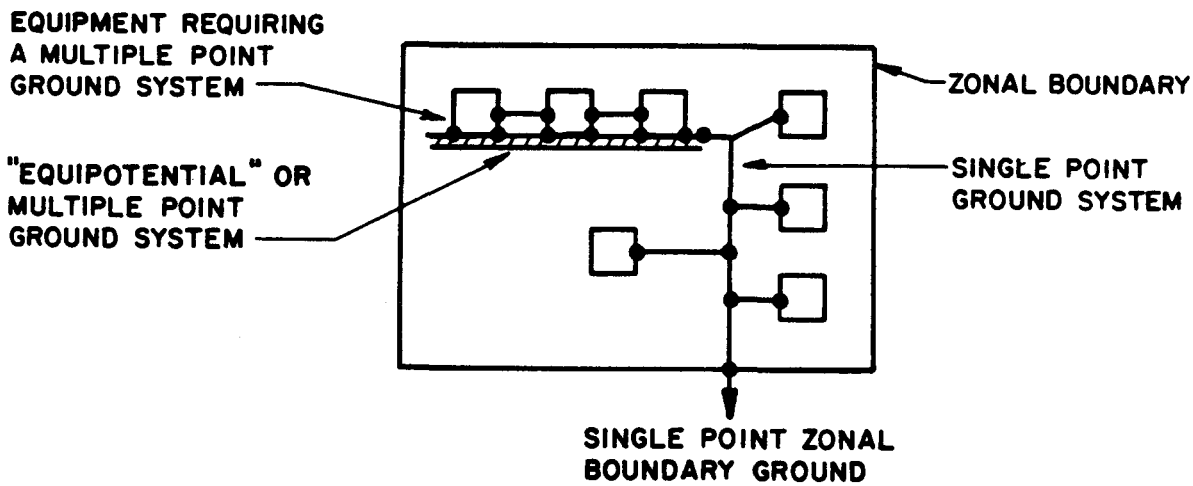

Figure 5-100. Typial hybrid ground configuration.

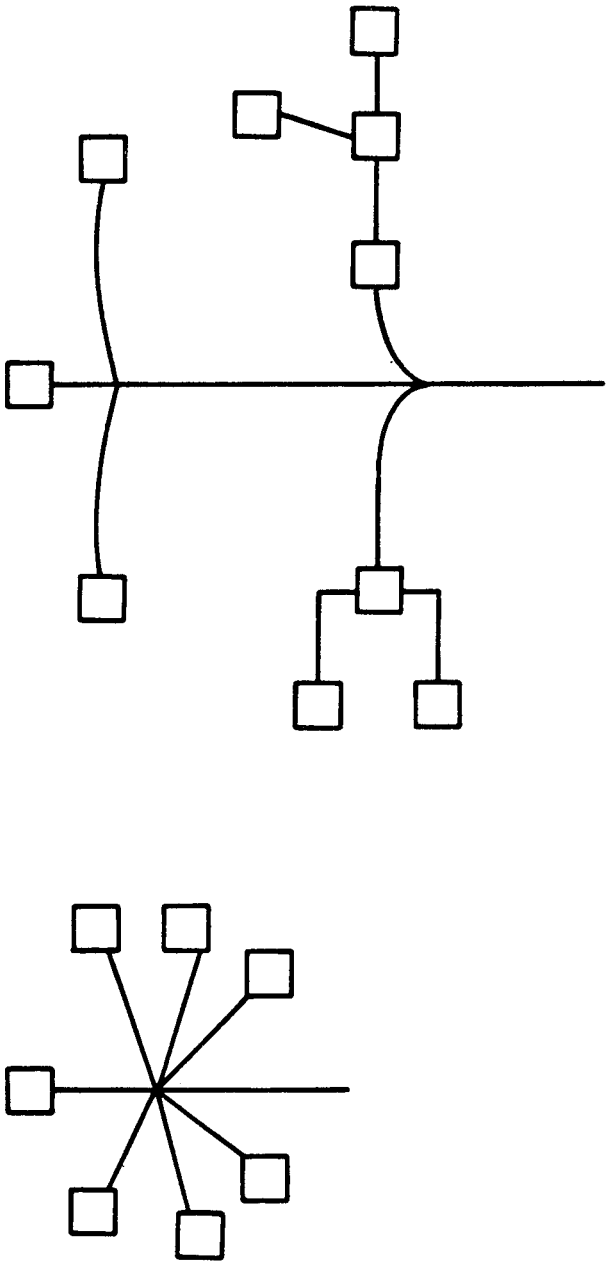

Figure 5-101. Typical ground configurations for HEMP protection.