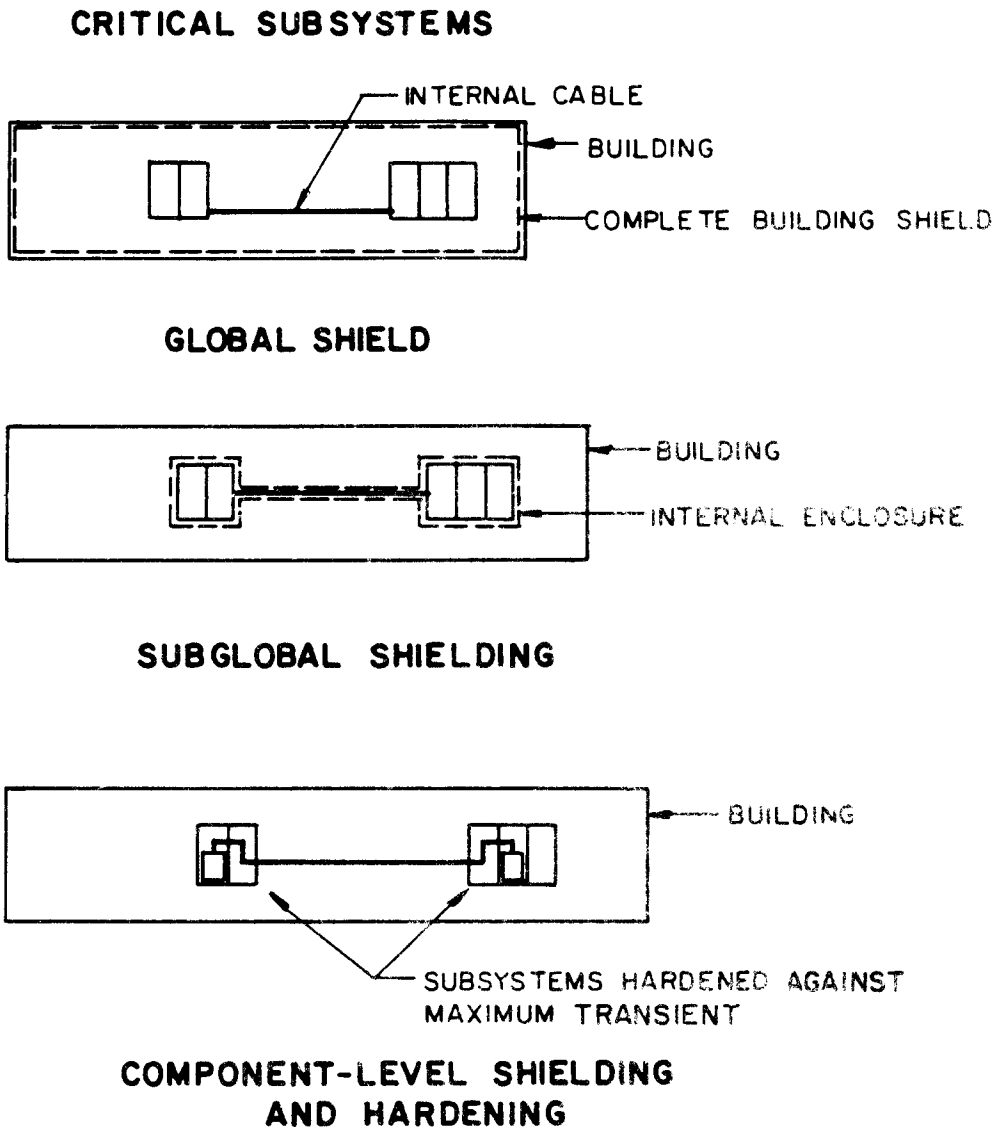

Figure 3-1. Building examples showing three concepts for critical equipment protection.

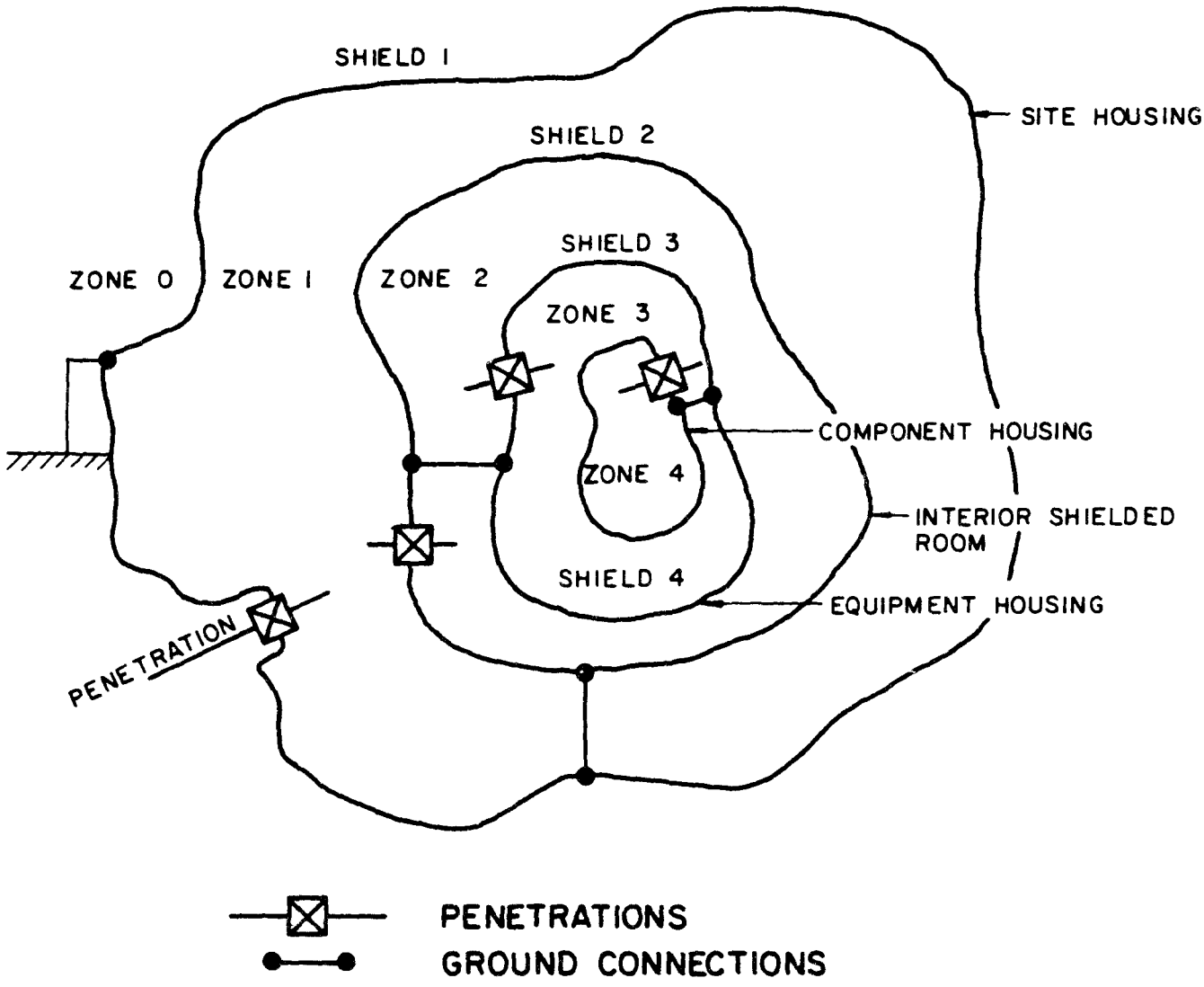

Figure 3-2. Zonal shielding concept.

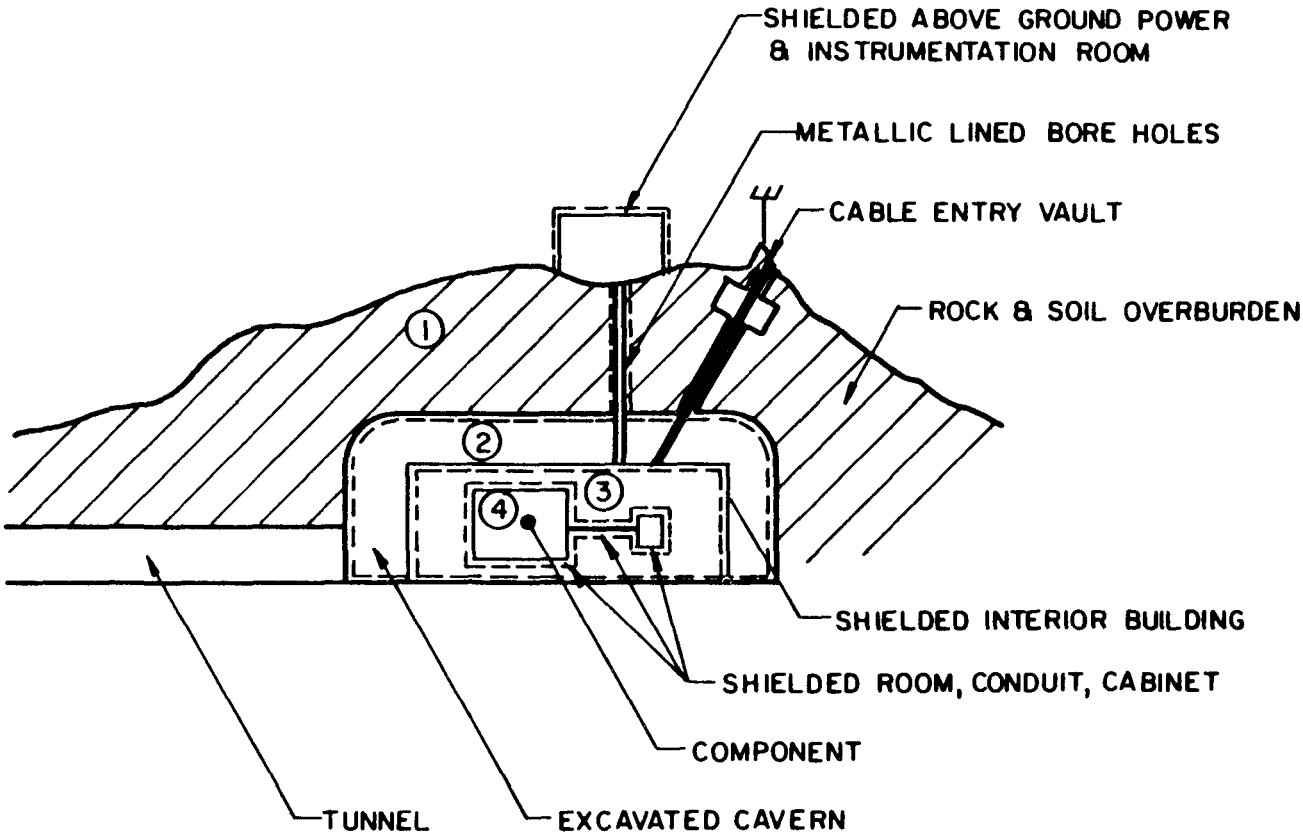

Figure 3-3. Underground facility with four zones.

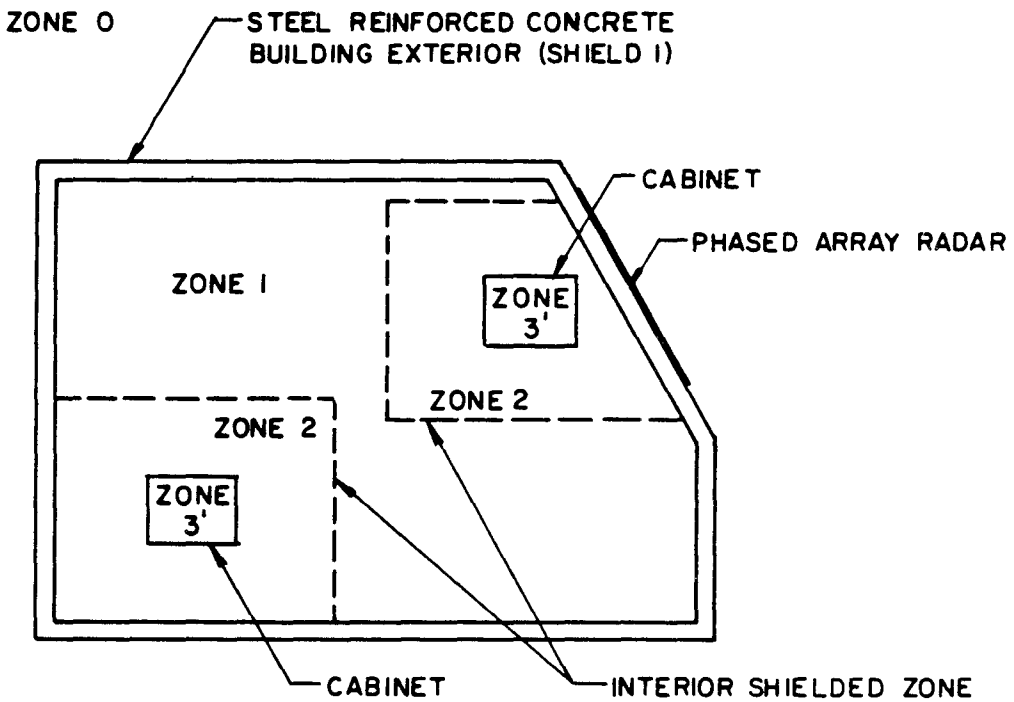

Figure 3-4. Zonal shielding concept with steel-reinforced concrete as shield 1.

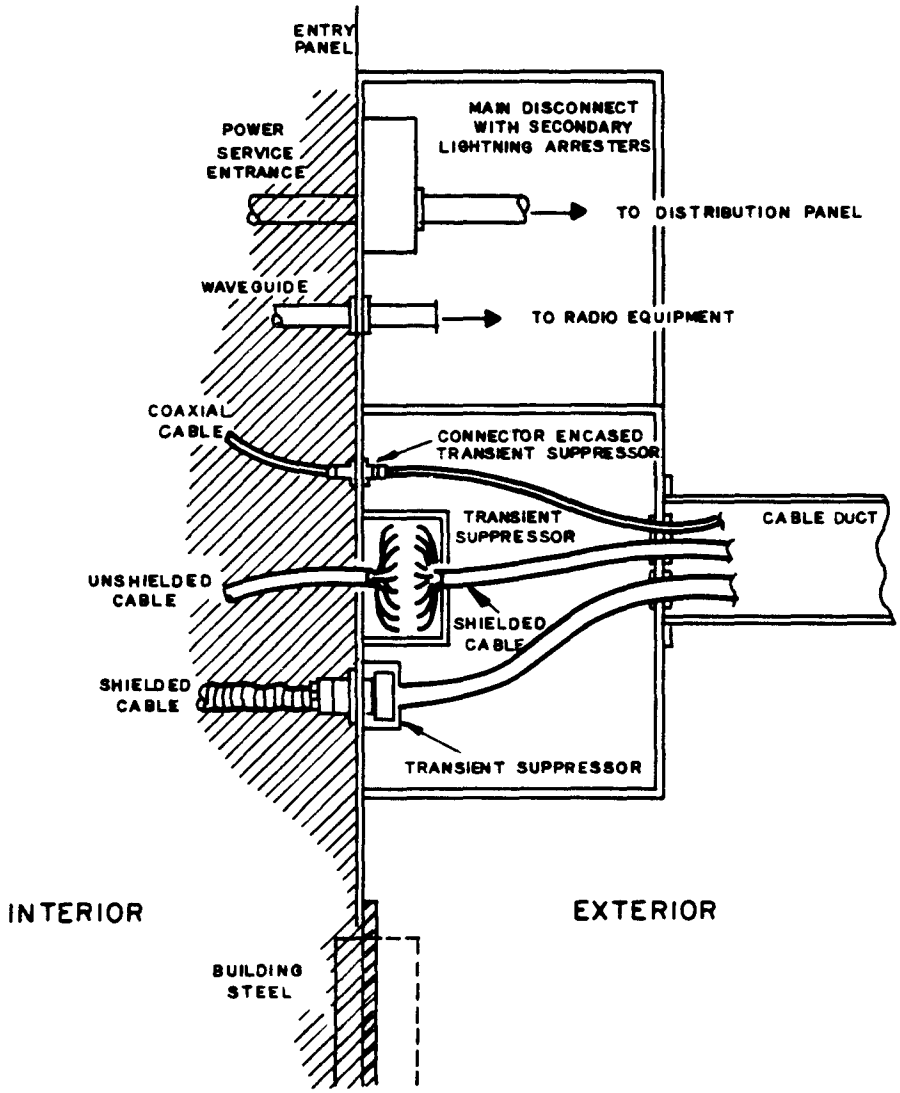

Figure 3-5. Shielded enclosure: cable entry vault.

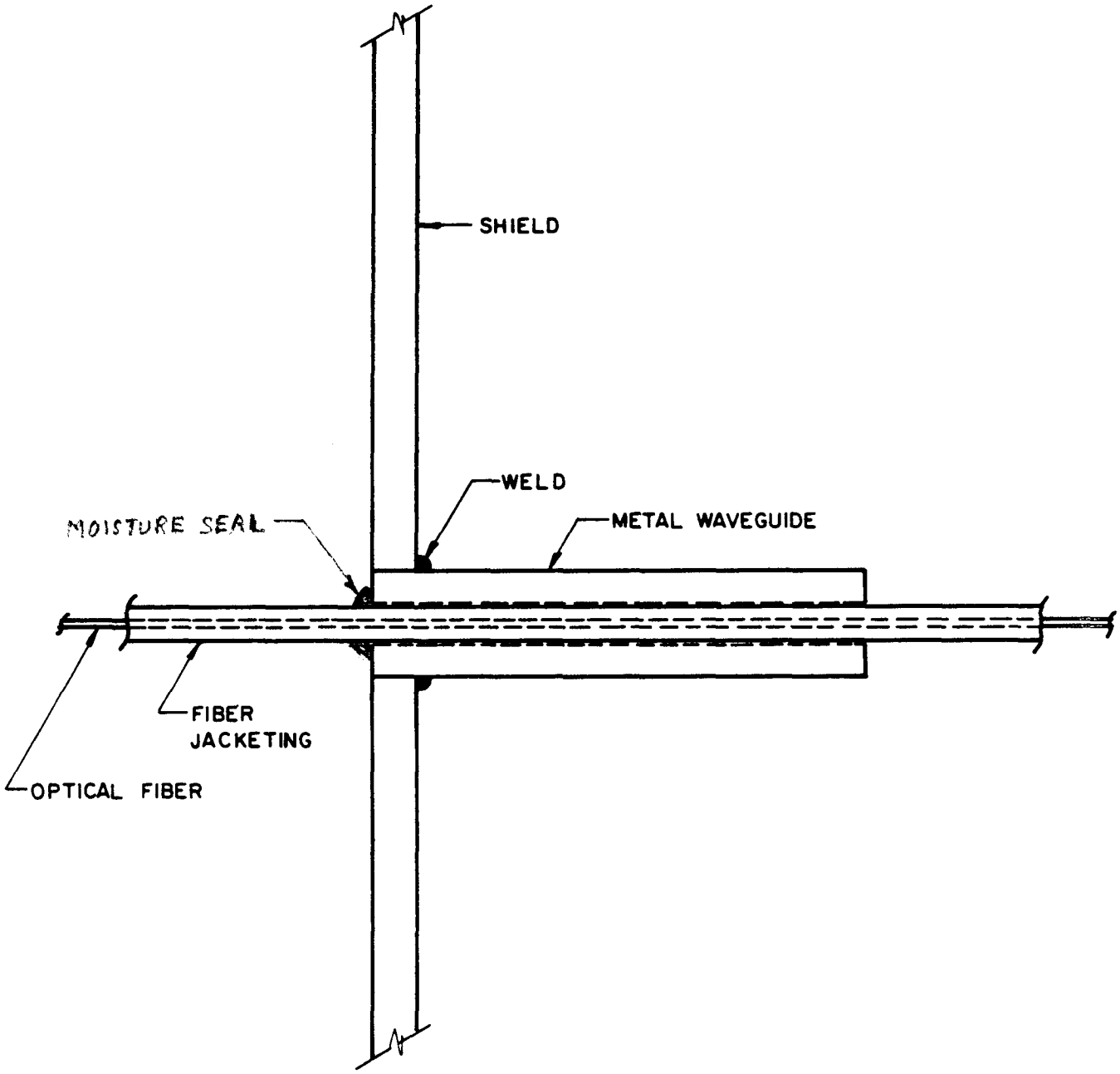

Figure 3-6. Optical fiber shield penetration.