Table 6-1. Test applicability

	Concept exploration phase	Concept validations phase	Design development phase	Construction/ installation phase	Operation and support phase
Objective	o Evaluate design alternatives o Establish protection requirements	o Validate selected approach	o Validate selected approach/ designs	o Quality assurance o Hardness assessment and verification test o Product acceptance	o Hardness surveillance
Analysis/ test approaches	Laboratory tests: o SE/leakage o Large loop o Helmholtz coil o Parallel plate o Radiated fields o Strip line o Small loop o Radiated fields o Strip line o Cables o Triaxial o Quadraxial o Coaxial o Susceptibility o Current injection o Coupling o Scale modeling	Prototype laboratory tests: o SE/leakage o Large loop o Helmoltz coil o Parallel plate o Radiated fields o Strip line o Small loop o Radiated fields o Strip line o Cables o Triaxial o Quadraxial o Coaxial o Susceptibility o Current injection o Coupling o Scale modeling	Laboratory tests: o SE/leakage (as before) o Protection element design o Direct injection	QA/acceptance tests: o Shield fabrication o Seam sniffer o Visual inspection o Small loop o Radiated o High/low impedance o Aperture treatment o Radiated o Strip line o Penetrations o Shield tech. o Current injection o TPDs o Current injection Verification tests: o EMP large volume simulators o CW radiated o Parallel plate o Current injection	SE: o Seam sniffer o Built-in Helmholtz coils o CW illuminators o Built-in local current sources Cables: o Current injection o Built-in sense drive wires TPD: o Current injection o Ground bond tests

Table 6-2. Summary of existing bounded-wave simulators

Name*	Location	Wave-form	Polar-ization	Magnitude	Interaction volume	Status
ALECS	Kirtland AFB, NM	Exo**	V	50 kV/m	30x30x10 m	Operational
ARES	Kirtland AFB, NM	Exo	V	70 kV/m	40x30x20 m	Operational
TRESTLE	Kirtland AFB, NM	Exo	V	50 kV/m	80x80x75 m	Operational
TEFS	WSMR, NM	Exo	V,H	65 kV/m	40x40x10 m	Operational
TEFS	NSWC/WOL, MD	Exo	V,H	50 kV/m	Modular	Operational

*ALECS = AFWL/LASL Electromagnetic Calibration and Simulation Facility; ARES = Advanced Research EMP Simulator; TEFS = Transportable Electromagnetic Field Simulator.
**HEMP double exponential.

Table 6-3. Summary of radiating wave simulators

Name*	Location	Wave-form	POL**	Direct wave magnitude/distance	Interaction area (~P1. wave)	Angle of arrival	Status
RES I	Portable, Kirtland AFB, NM	Exo***	H	1000 V/m @ 500 m	100 m	Any	Deactivated
RES II	Portable, Kirtland AFB, NM	Exo	V	1000 V/m @ 500 m	100 m	Any	Deactivated
VPD	Kirtland AFB, NM	Exo	V	3 kV/m @ 200 m	Area directly below antenna (non-planar)	Grazing	Operational
HPD	Kirtland AFB, NM	Exo	H	50 kV/m @ 9 m HAC+	ditto	normal	Operational
HDL Biconic	HDL, Woodbridge, VA	Exo	H	15 kV/m @ 100 m	~200 m	10° @ 200 m	Operational
AESOP	HDL, Woodbridge, VA	Exo	H	50 kV/m @ 50 m	~200 m	10° @ 200 m	Operational
VEMPS	HDL Woodbridge, VA	Exo	V	5 kV/m @ 25 m (0.25 MV pulser)	~100 m	Grazing	Operational
EMPRESS	NSWC Solomons, MD	Exo	H	2.2 kV/m @ 300 m (16 m HAG)	~300 m	8° @ 300 m	Operational
EMPRESS	NSWC Solomons, MD	Sur-face	V	4 kV/m @ 300 m	~300 m	Grazing	Operational
EMPSAC	NSWC/NATC Patuxent, MD	Exo	H	8.5 kV/m @ 50 m	~25-50 m	17° @ 50 m	Operational
NAVES	NSWC/NATC Patuxent, MD	Exo	V	11 kV/m @ 50 m	25-50 m	Grazing	In construction
TEMPS	DNA, transport-able	Exo	H	50 kV/m @ 50 m 12.5 kV/m @ 200 m	200 m	10° @ 200 m	Operational

*RES I & II = Radiating Electromagnetic Simulators; VPD = vertically polarized dipole; HDL = Harry Diamond Laboratories; AESOP - Army Electromagnetic Simulator Operations Facility; VEMPS = Vertical Electromagnetic Simulator; EMPRESS = Electromagnetic Pulse Radiation Environment Simulator for Ships; EMPSAC = EMP Simulator for Aircraft; NAVES = Navy EM Simulator; TEMPS = transportable EMP simulator.
**POL = polarization
***Exo = HEMP double exponential.
+Directly below antenna.

Table 6-4. Scaling relationships

Model size	$D_s = \frac{D_a}{M}$
Frequency	$w_s = Mw_a$
Conductivity	$c_s = Mc_a$
Permittivity	$p_s = p_a$
Permeability	$u_s = u_a$
Propagation loss	$a_s = Ma_a$
Propagation phase	$B_s = MB_a$

Table 6-5. Summary of quality assurance test methods (source: ref 6-4)

Fixture type	Environment	Injection method	Fixture termination	Cable	Verification	Assurance	Surveillance	Maintenance	Response measurement (A)	Excitation measurement (B)	Measure of shielding effectiveness
Quadraxial (trough): Four concentric conductors with cable conductors and shield forming innermost pair. Direct current injection into No. 3. Conductor with return divided between cable shield and outer conductor.	CW	Direct, cable shield external return	Matched	Optional	X	X			Core current and/or voltage	Shield current	A/B
Triaxial: Three concentric conductors with cable conductor and shield forming innermost pair. Cable and/or connector shield are common to both inner and outer coaxial chamber. One chamber is connected to the generator, the other to the receiver. Other chamber may be driven. Receiver may be at generator end, or at opposite end.	Pulse CW	Direct, cable shield, external or internal return	Matched	Optional or short	X	X			Core current and/or voltage	Shield current	A/B
Coaxial: Two concentric conductors, formed by cable conductors and shield. Driven between shield and conductors. Measure external field (sniffer).	CW	Direct internal return	N/A	Short	X	X	X	X	External field	Core current or voltage	A/B
System Level: Environment applied to shielding system either as a radiated field or as a current density on the outer shield enclosure. Measure response at several points inside system. Additional tests are required to isolate points of entry.	Pulse CW	Direct or radiated exposure of system enclosure	N/A	Open and short			X		Core current and voltage	Shield current or field	A/B

Table 6-6. Comparison summary of shielding effectiveness test methods (source: ref 6-9)

Parameter specified in document	Test categories											
	Magnetic field				Electric field			Plane wave (ultrahigh frequency)			Plane wave (microwave)	
	IEEE 299	IEEE 299	MIL-STD -285	NSA 65-6*	IEEE 299	MIL-STD -285	NSA 65-6*	IEEE 299	MIL-STD -285	NSA 65-6*	IEEE 299	MIL-STD -285
Test frequency or frequency range	100 Hz to 200 KHz	100 Hz to 20 MHz	150 KHz to 200 KHz	1 KHz, 10 KHz, 100 KHz & 1 MHz	-	200 KHz, 1 MHz, & 18 MHz	1 KHz, 10 KHz, 100 KHz, 1 MHz & 10 MHz	300 MHz to 1 GHz	400 MHz	100 MHz, 400 MHz & 1 GHz	1.7 GHz to 12.4 GHz	-
Test Method	Large Loop	Small Loop	Loop test (low impedance magnetic field)	Loop test	-	Rod radiator test (high impedance electric field)	Monopole test (electric field)	Dipole test (ultrahigh frequency)	Dipole test (attenuation test for plane waves)	Tuned horizontal dipole test (plane wave)	Microwave test	-
Primary components tested	Shielded enclosures	Shielded enclosure plus doors, welds, and electrical & air duct filter enclosures	Shielded enclosure	Shielded enclosure	-	Shielded enclosure	Shielded enclosure	Shielded enclosure	Shielded enclosure	Shielded enclosure	Shielded enclosure	-
Secondary components tested	Doors, welds and electrical filter and air duct filter enclosures	Welds	**	**	-	**	**	Door seams, electrical and air duct filter panels, air-vent areas, panel seams, & coaxial cable fittings	**		Door seams, electrical and air duct filter panels, air-vent areas, panel seams, & coaxial cable fittings	-

*All power line filters shall be tested for voltage drop (not to exceed 1%) under full load. They must be operated under full load for ten hours before testing. The increase in temperature of the outer case during this period must not exceed 25°C above the ambient temperature of the room.

**Test method does not contain preliminary procedures for checking enclosure components for leaks which are to be repaired before conducting primary test.

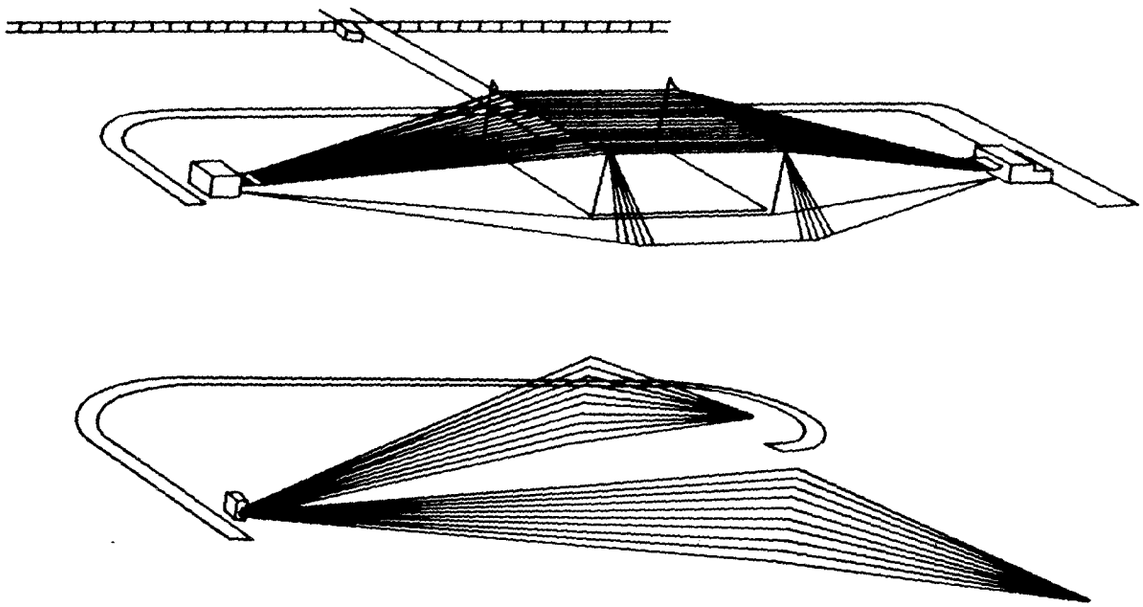

Figure 6-1. Bounded wave simulators.

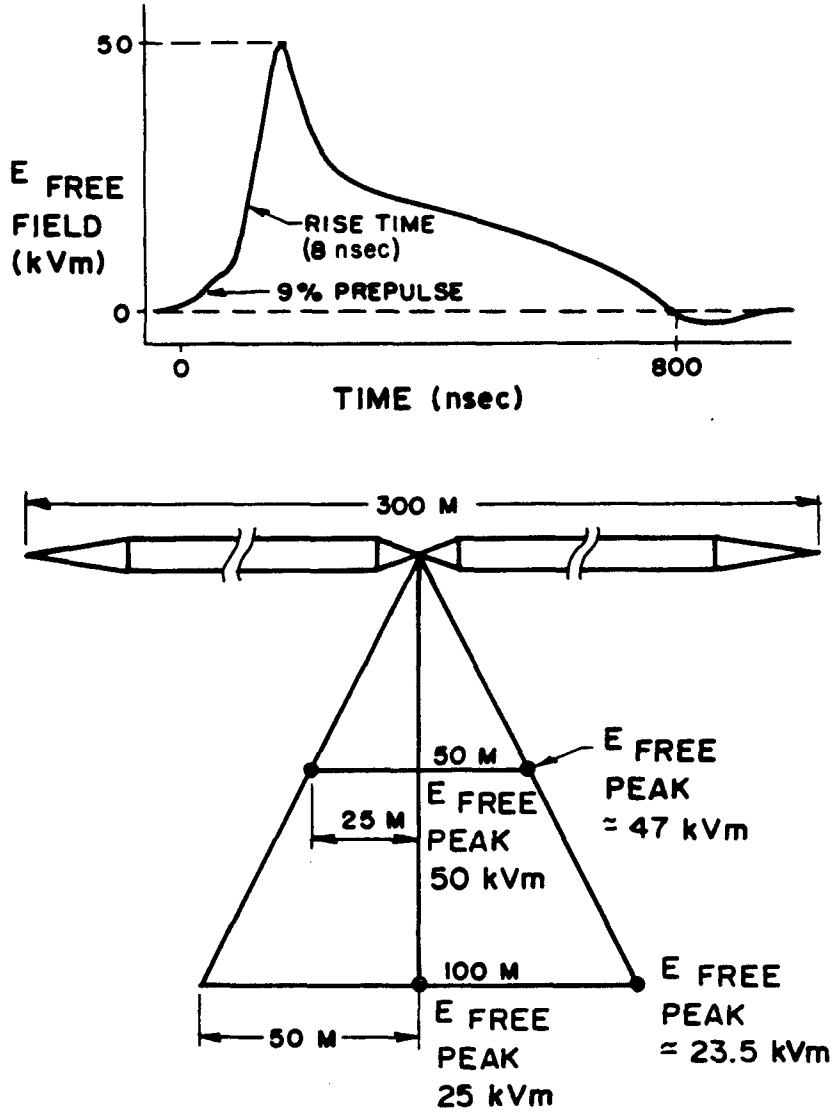

Figure 6-2. Pulsed radiated wave simulators. (sheet 1 of 2)

VEMPS CONSIST OF THE FOLLOW SUBSYSTEMS:

- 80-KV POWER SUPPLY
- 20-M-HIGH VERTICAL ANTENNA
- UNDERGROUND POWER SUPPLY
- GROUND PLANE

VEMPS ANTENNA PARAMETERS

OVERALL HEIGHT:	20 M
LOWER CONE ANGLE:	56 DEGREES
UPPER CONE ANGLE:	14 DEGREES
MAXIMUM DIAMETER:	4 M

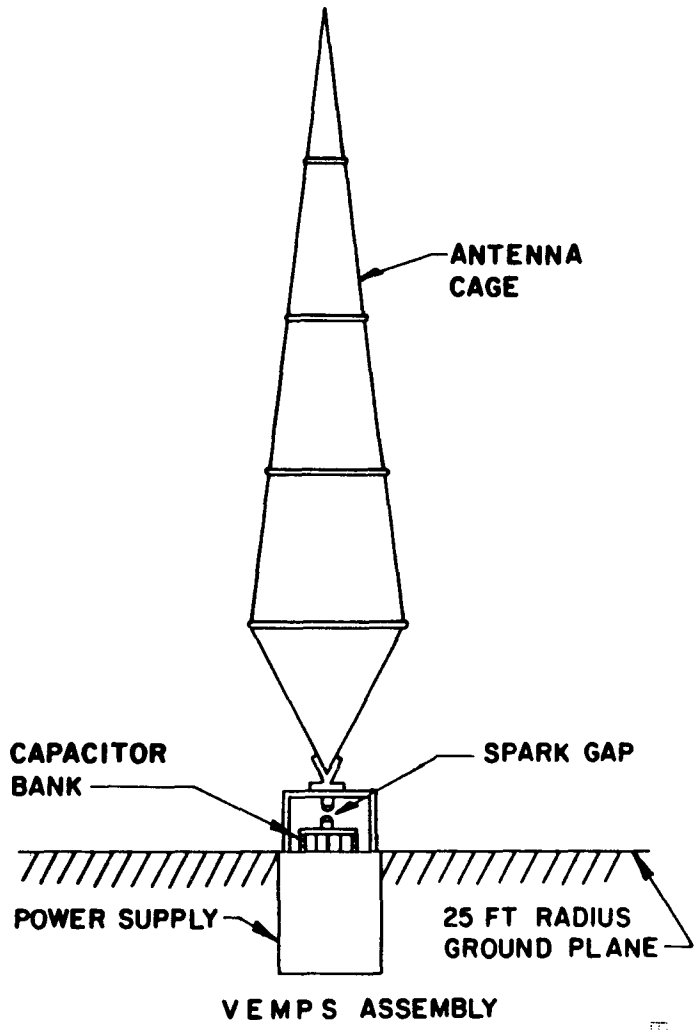

Figure 6-2. Pulsed radiated wave simulators. (sheet 2 of 2)

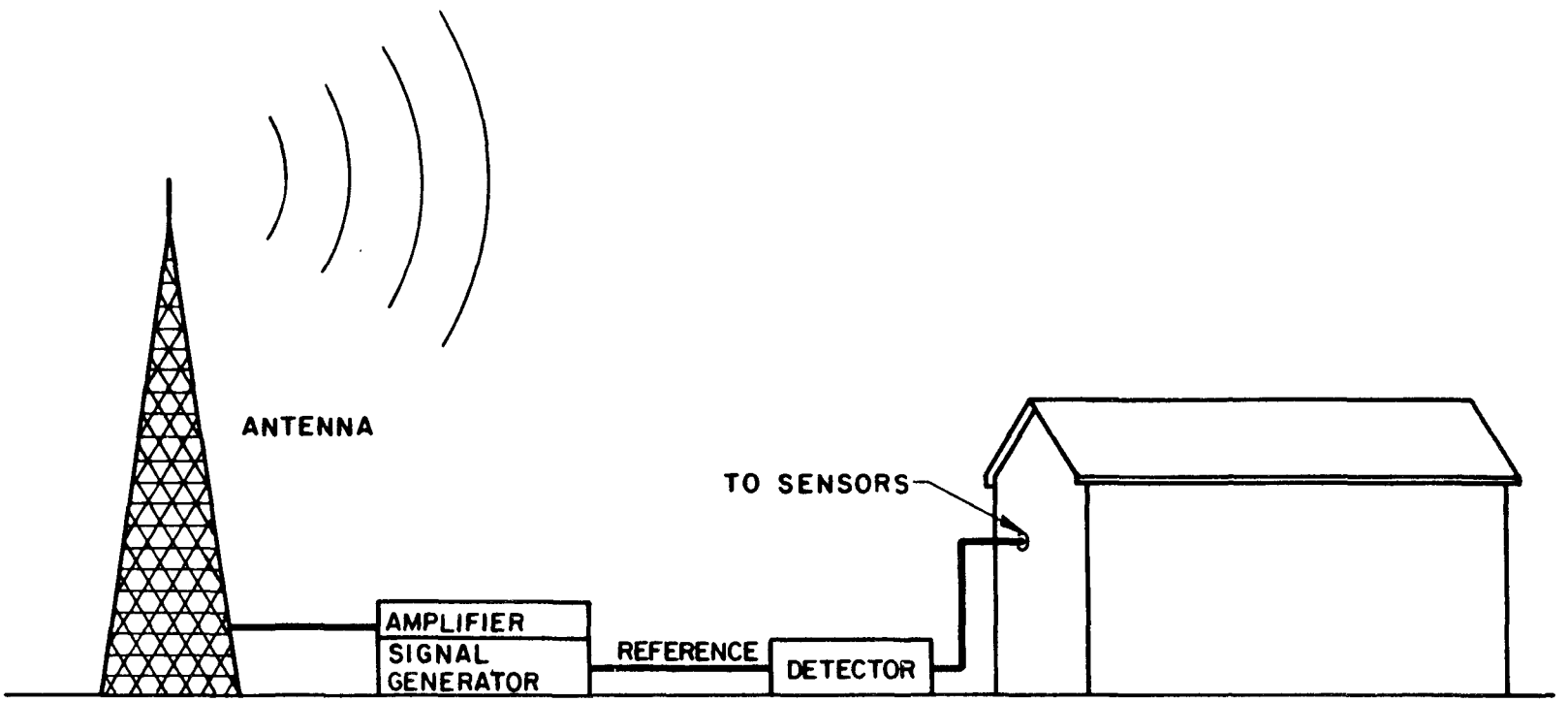

Figure 6-3. Continuous wave testing--CW test configuration.

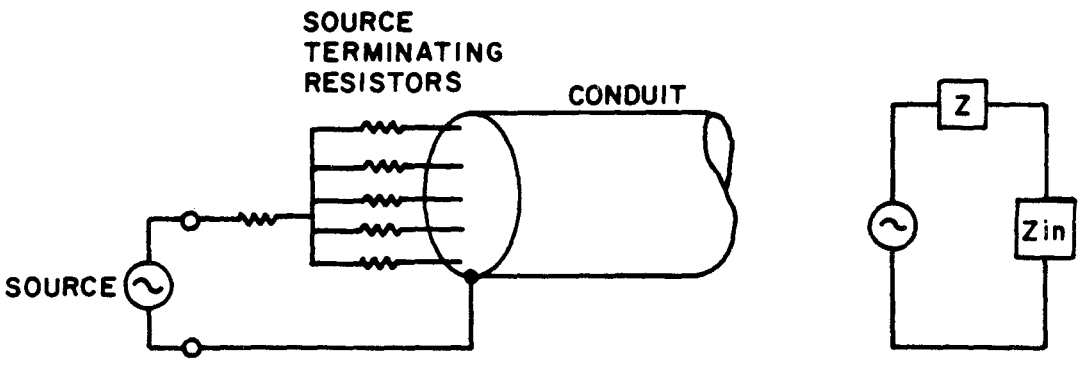

Figure 6-4. Direct current injection testing.

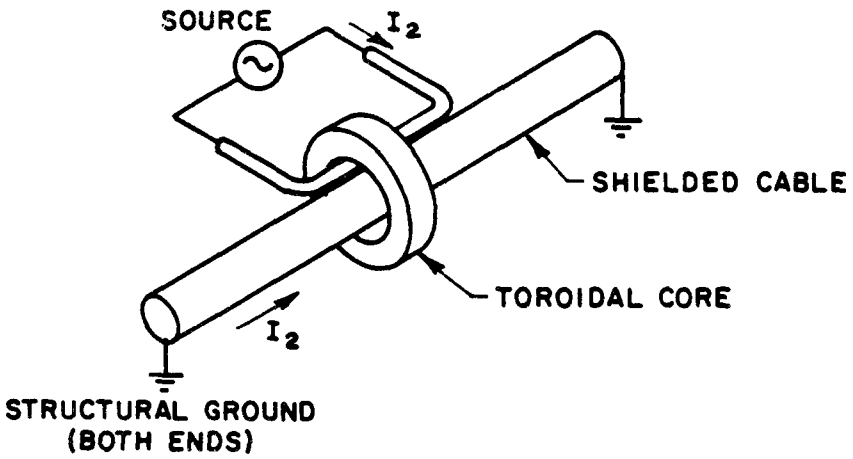

Figure 6-5. Inductive current injection testing.

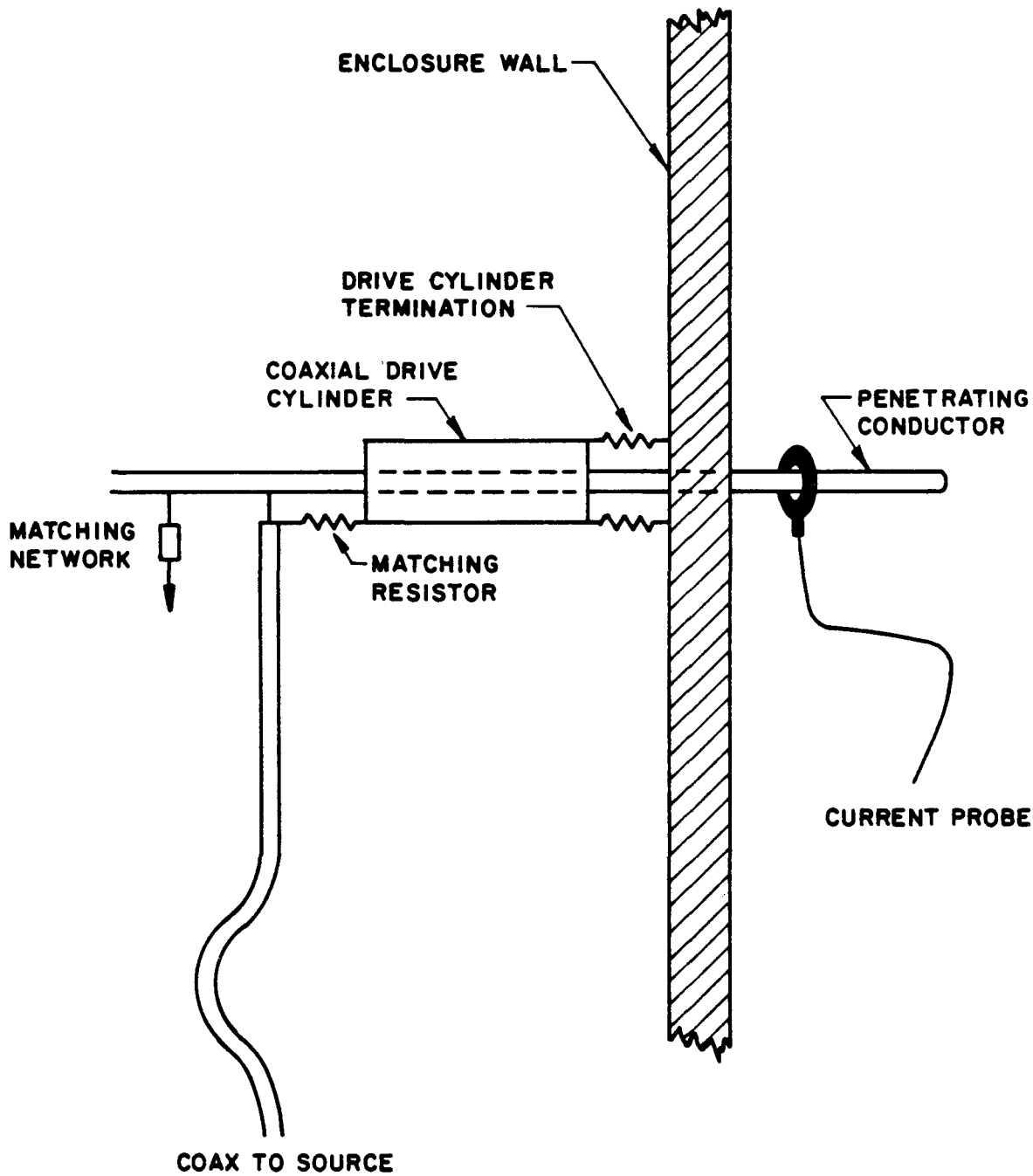

Figure 6-6. Direct drive test for penetrating conductor (conceptual sketch).

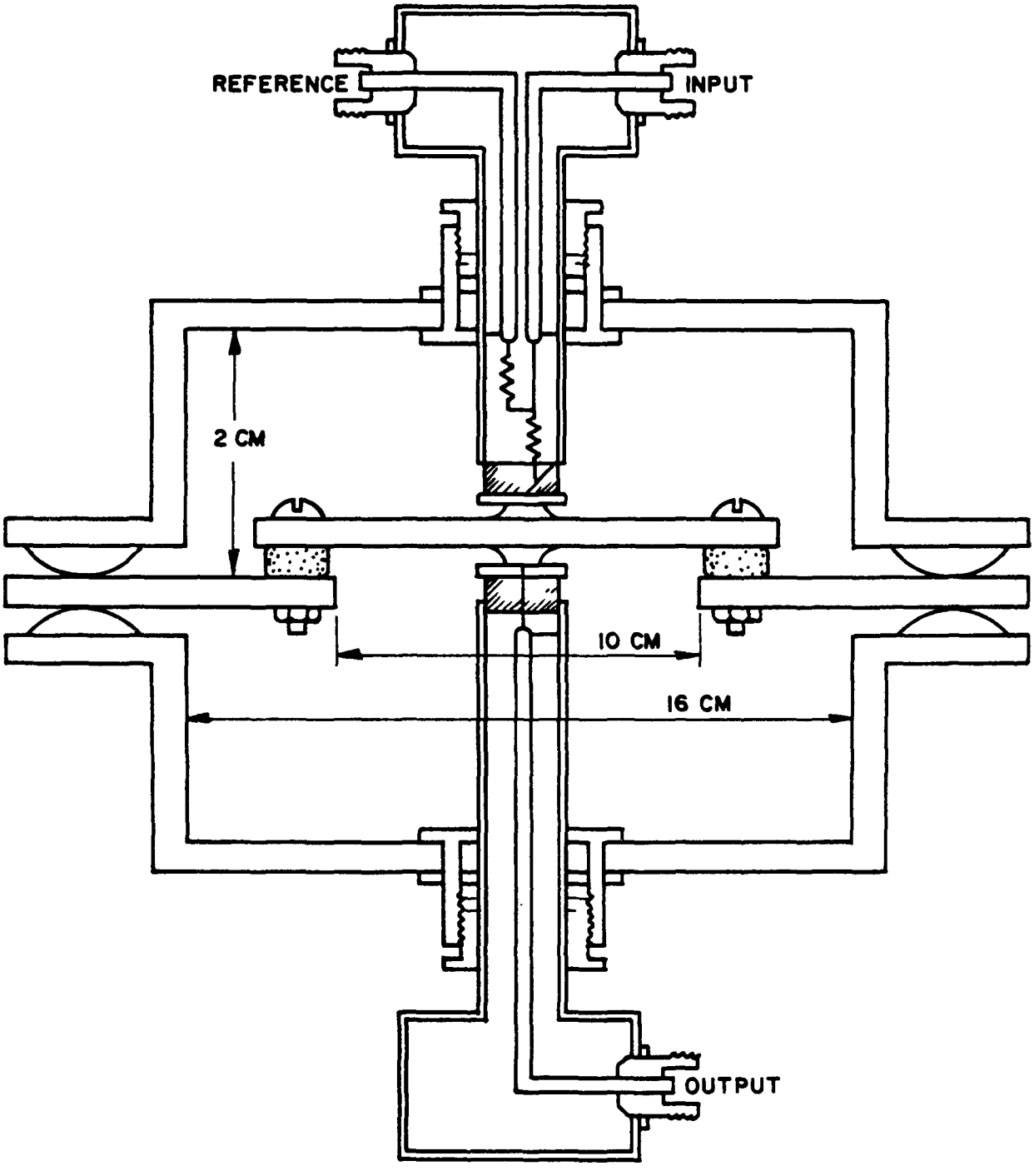

Figure 6-7. Transfer impedance/admittance test setup.

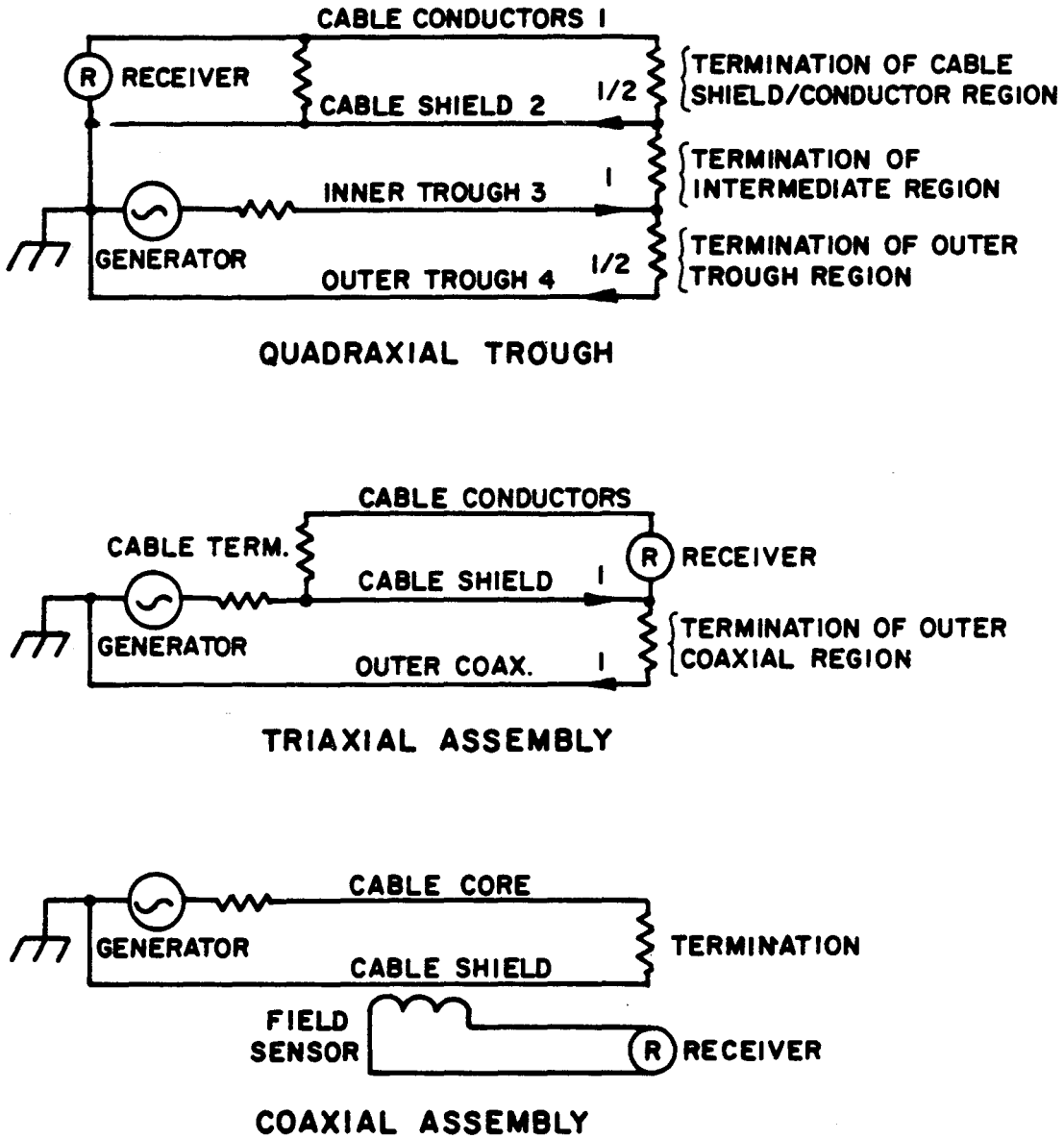

Figure 6-8. Alternative demonstration and test methods.

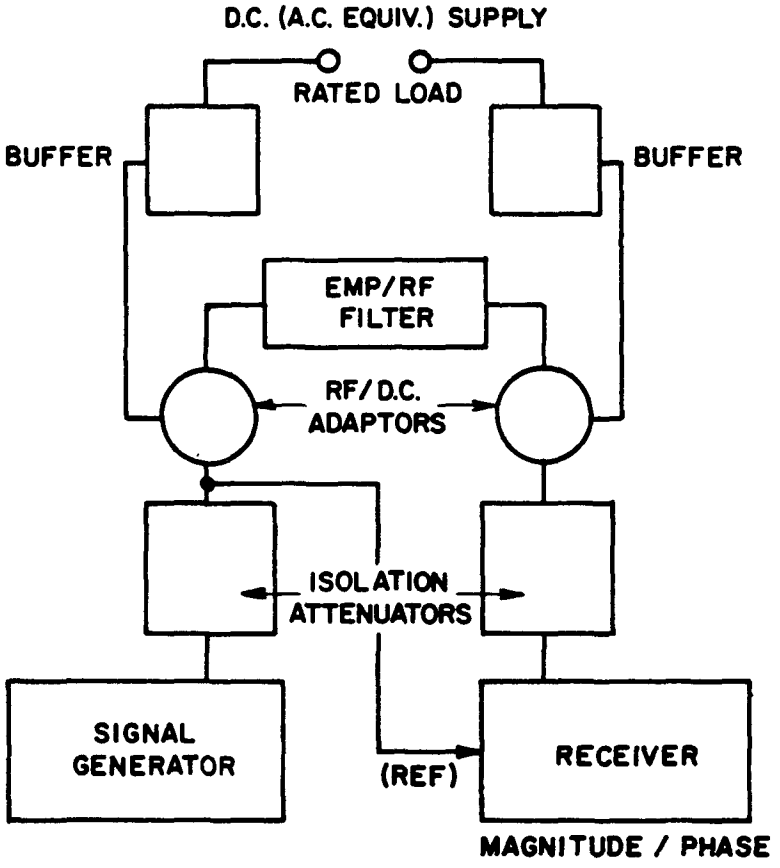

Figure 6-9. Response characteristic measurement.

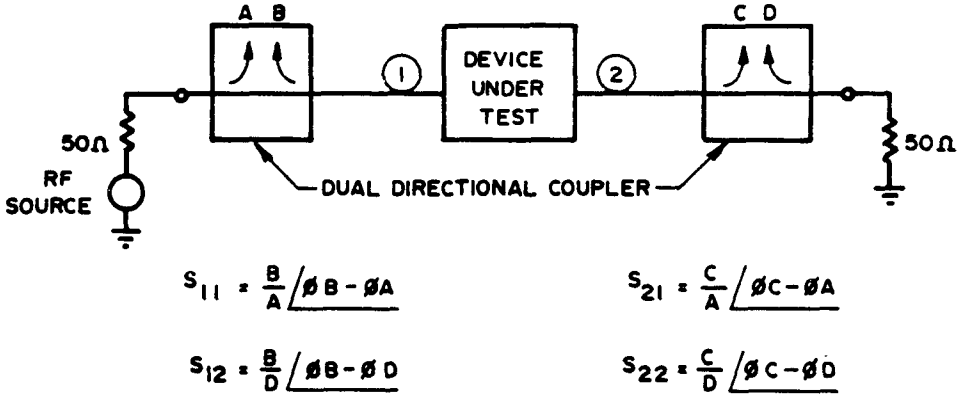

Figure 6-10. Standard circuit for measuring S parameters.

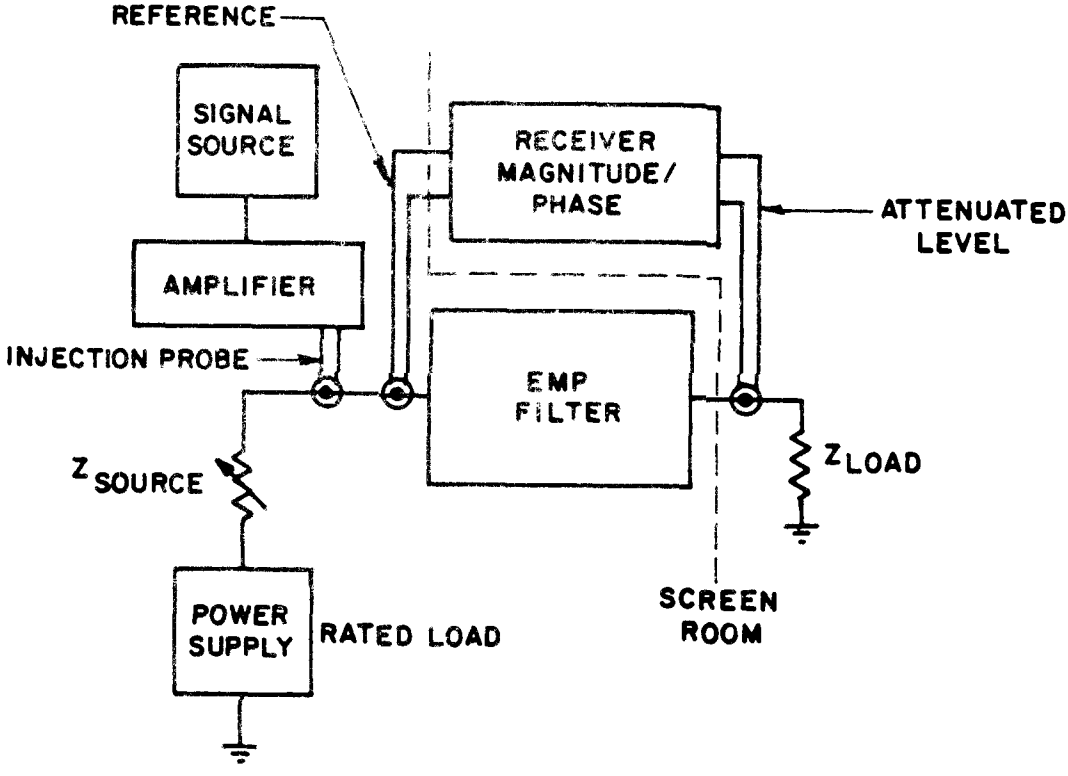

Figure 6-11. Response measurement. (Source: ref 6-4)

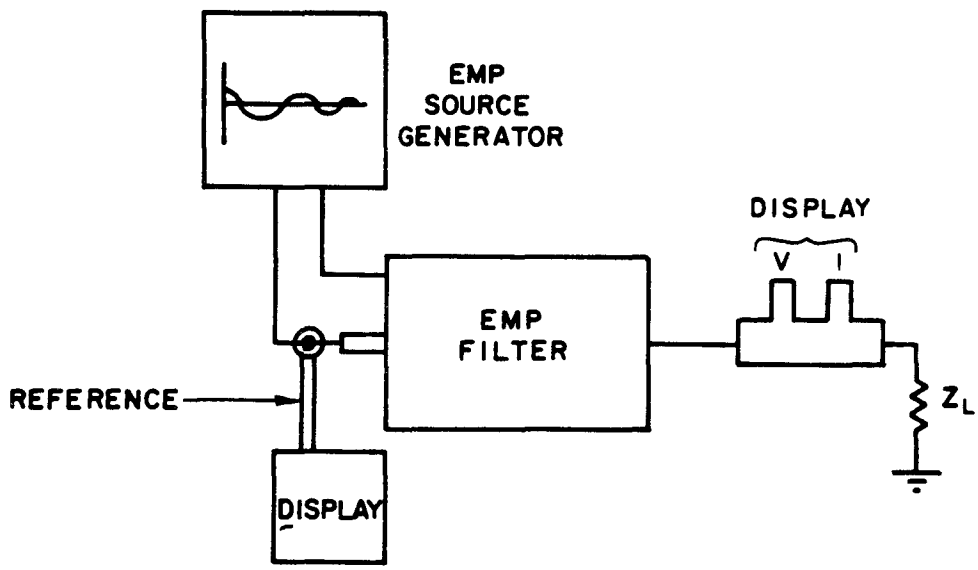

Figure 6-12. HEMP stress test. (Source: ref 6-4)

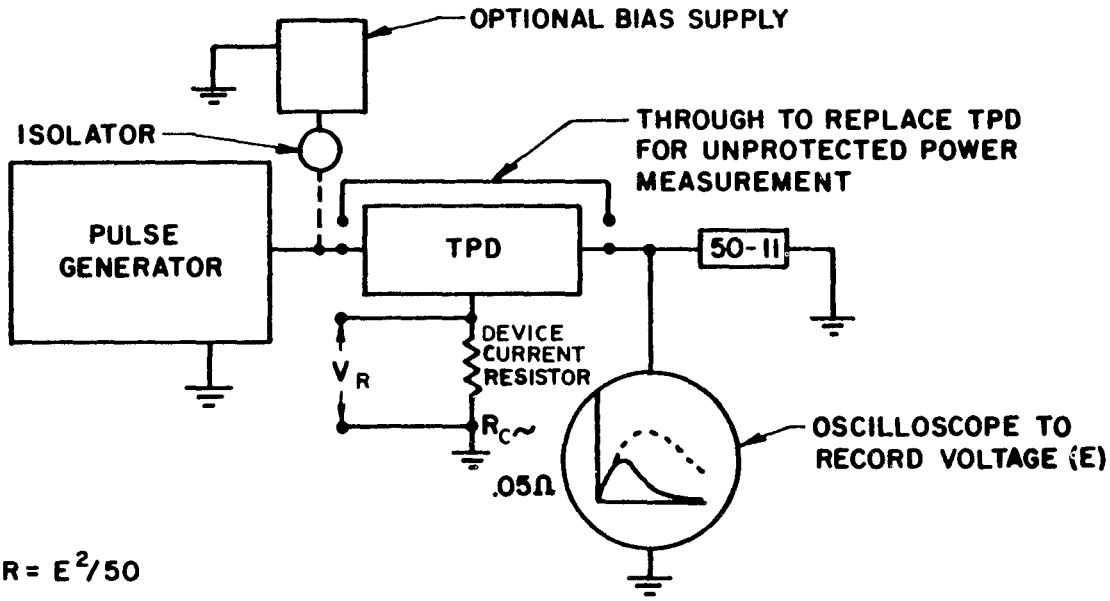

POWER = $E^2/50$

V_R USED TO DETERMINE TIME DENOTED AS t_{10} WHEN DEVICE CURRENT ≈ 10 AMPS

OPERATING IMPEDANCE = $Z_{10} - \frac{E(t_{10})}{10}$

Figure 6-13. TPD power attenuation test. (Source: ref 6-4)

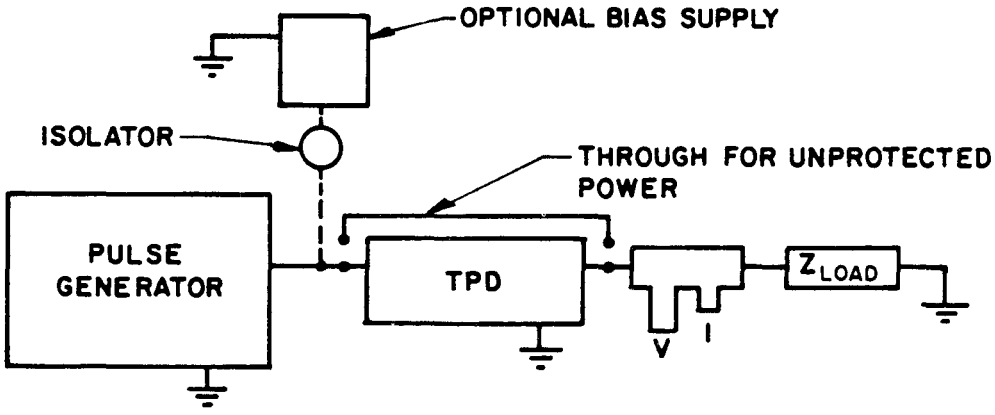

Figure 6-14. Alternative power attenuation test using simulated subsystem impedance. (Source: ref 6-4)

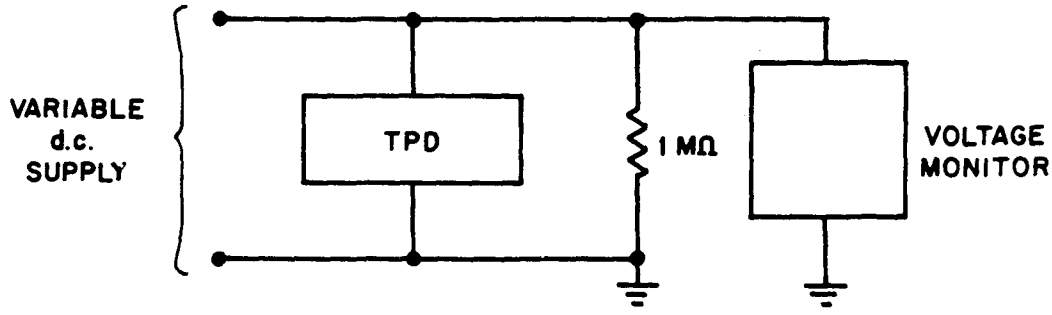

Figure 6-15. Static breakdown voltage measurement. (Source: ref 6-4)

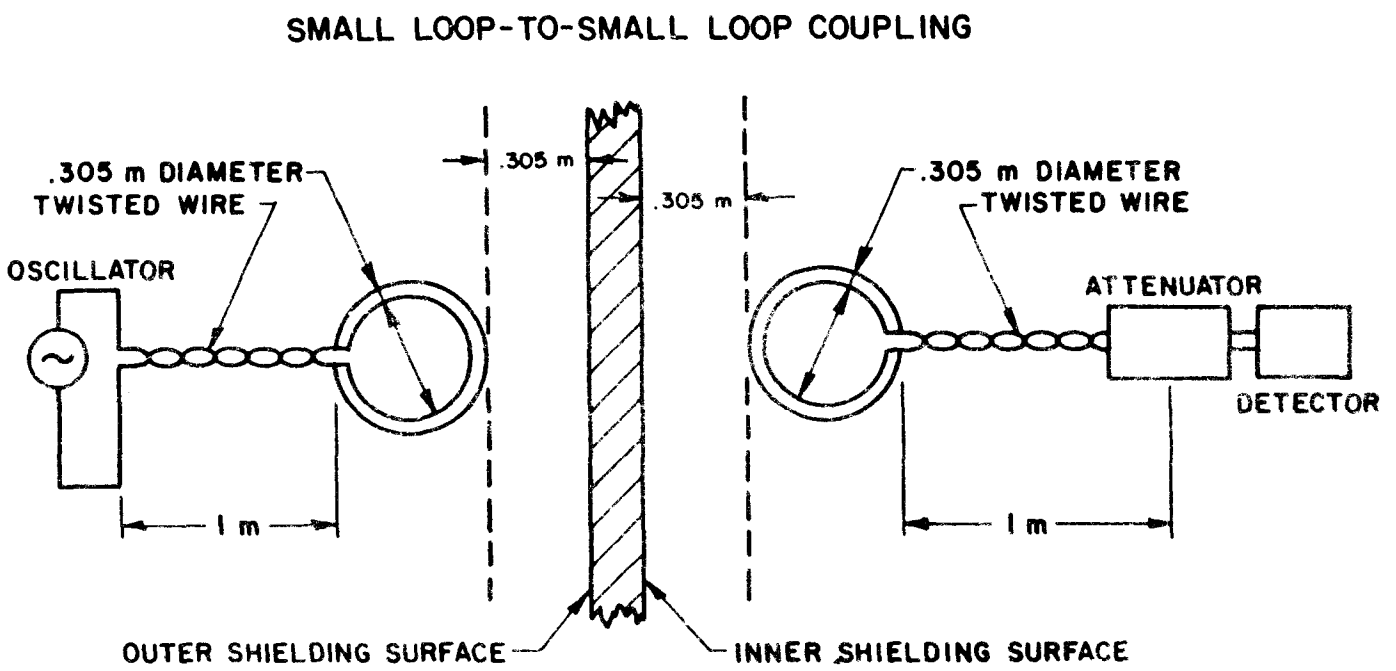

Figure 6-16. Small-loop-to-small-loop test setup. (Source: ref 6-4)

EP 1110-3-2
31 Dec 90

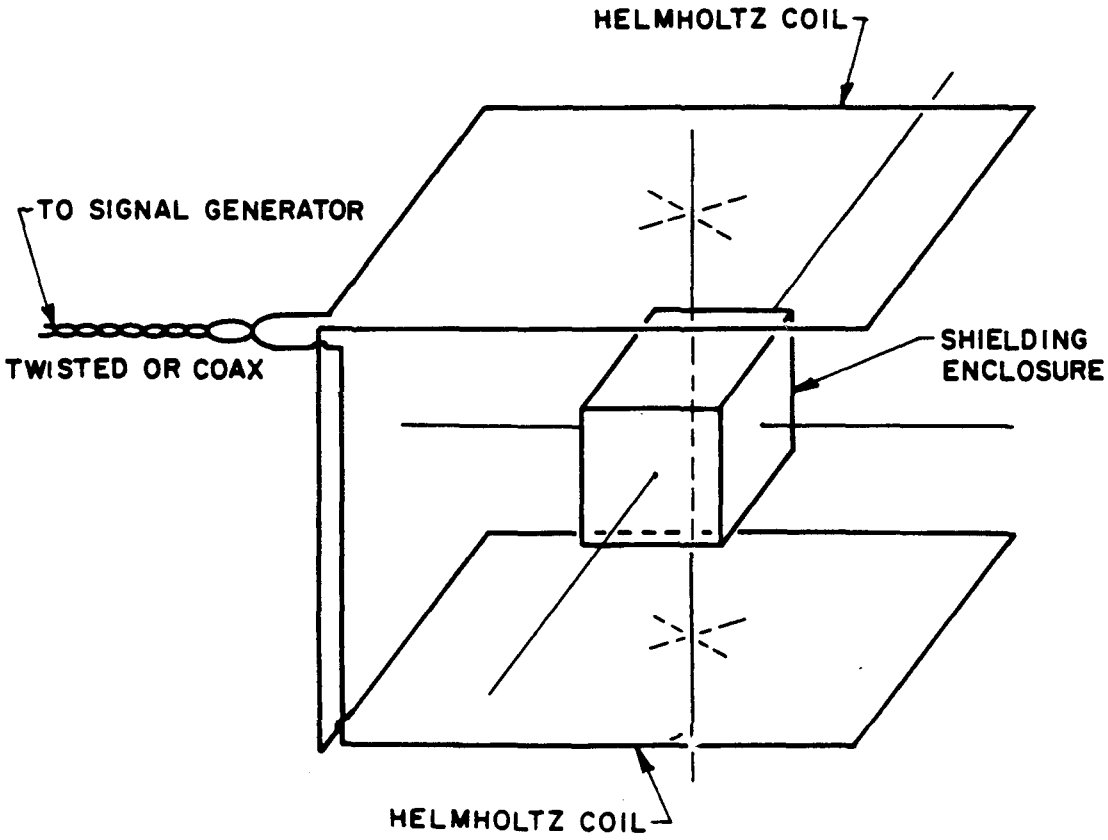

Figure 6-18. Test setup for Helmholtz coil field generation. (Source: ref 6-4)

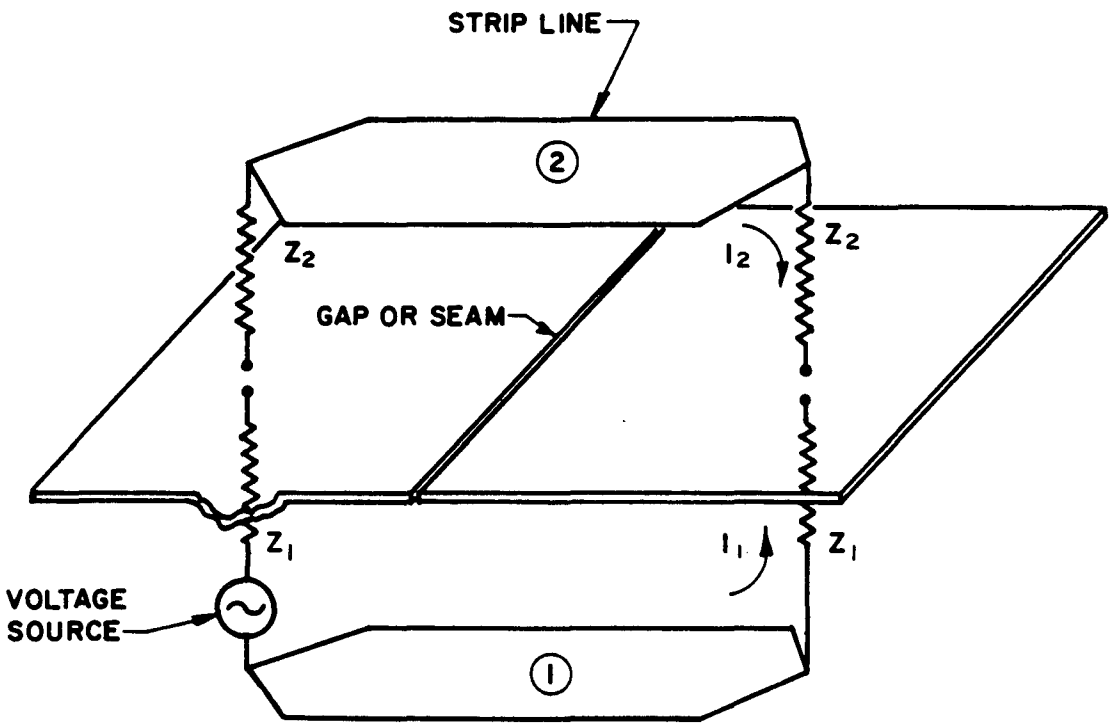

Z_1 MATCHED TERMINATIONS OF STRIPLINE 1

Z_2 MATCHED TERMINATIONS OF STRIPLINE 2

$$A = 20 \log \left| \frac{I_1}{I_2} \right|$$

Figure 6-19. Parallel strip line technique. (Source: ref 6-4)

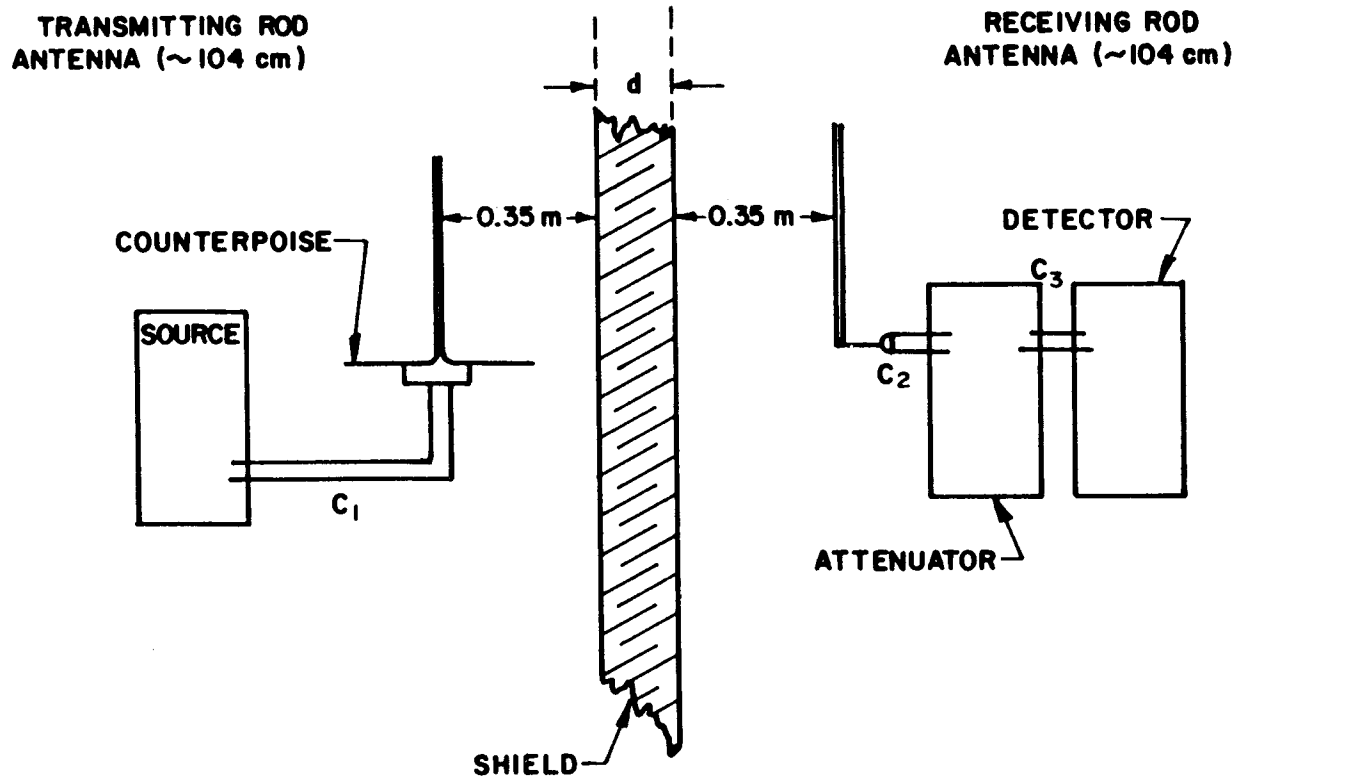

C_1, C_2, C_3 ARE SHIELDED TRANSMISSION LINE CABLES KEPT SHORT AS POSSIBLE AND USED ONLY IF NECESSARY.

d IS THE SHIELD THICKNESS.

Figure 6-20. Attenuation measurement--high-impedance electric field. (Source: ref 6-4)

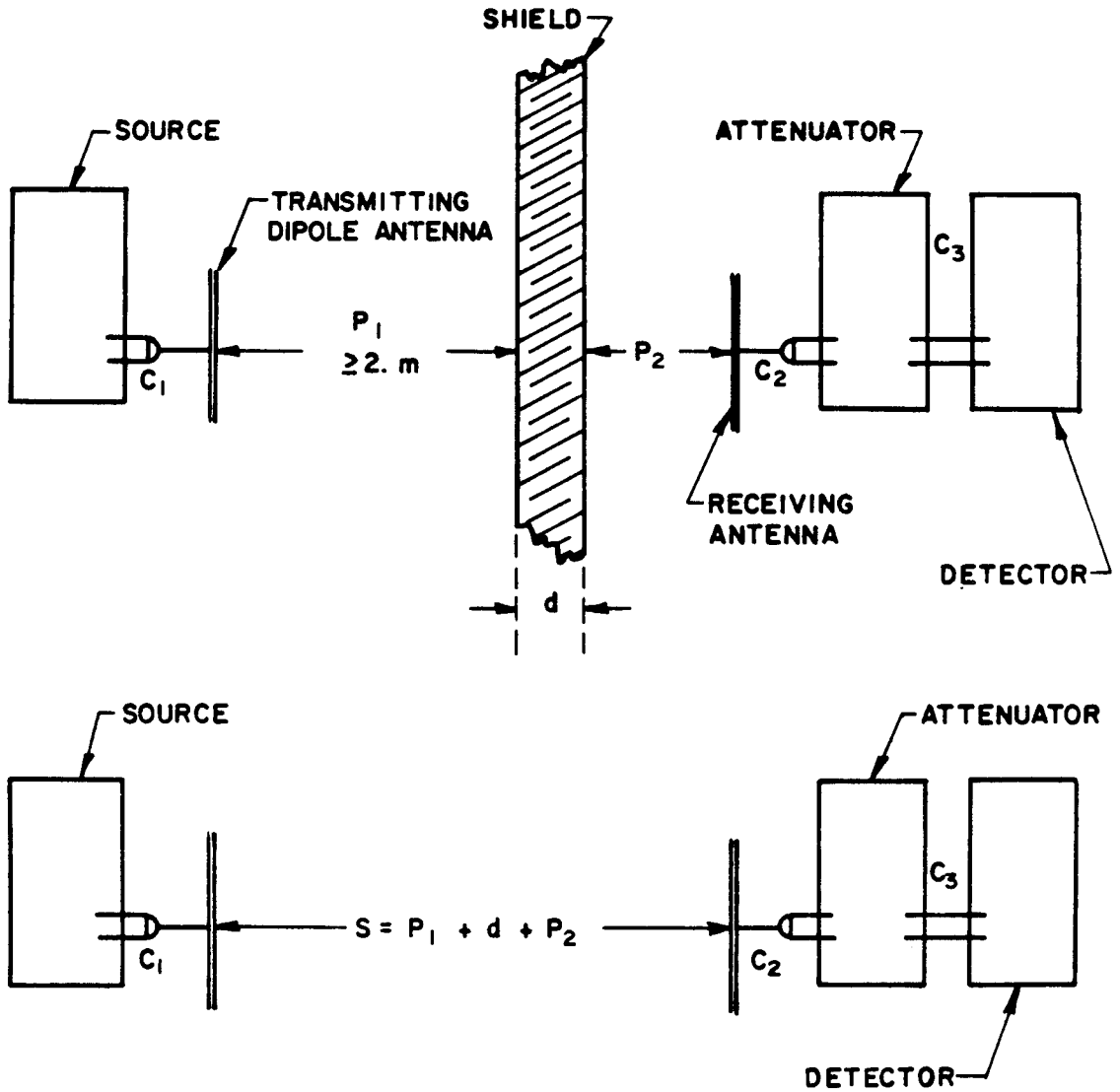

C_1, C_2, C_3 = shielded transmission line cables kept short as possible and used only if necessary.

d = shield thickness

P_1 = position of transmitting antenna (2 m minimum). This distance shall be as great as possible, limited only by the power of the source.

P_2 = receiving antenna placed such that a maximum indication of the detector is obtained (5cm minimum).

Figure 6-21. Attenuation test for plane waves (wave impedance = 377 ohms). (Source: ref 6-4)

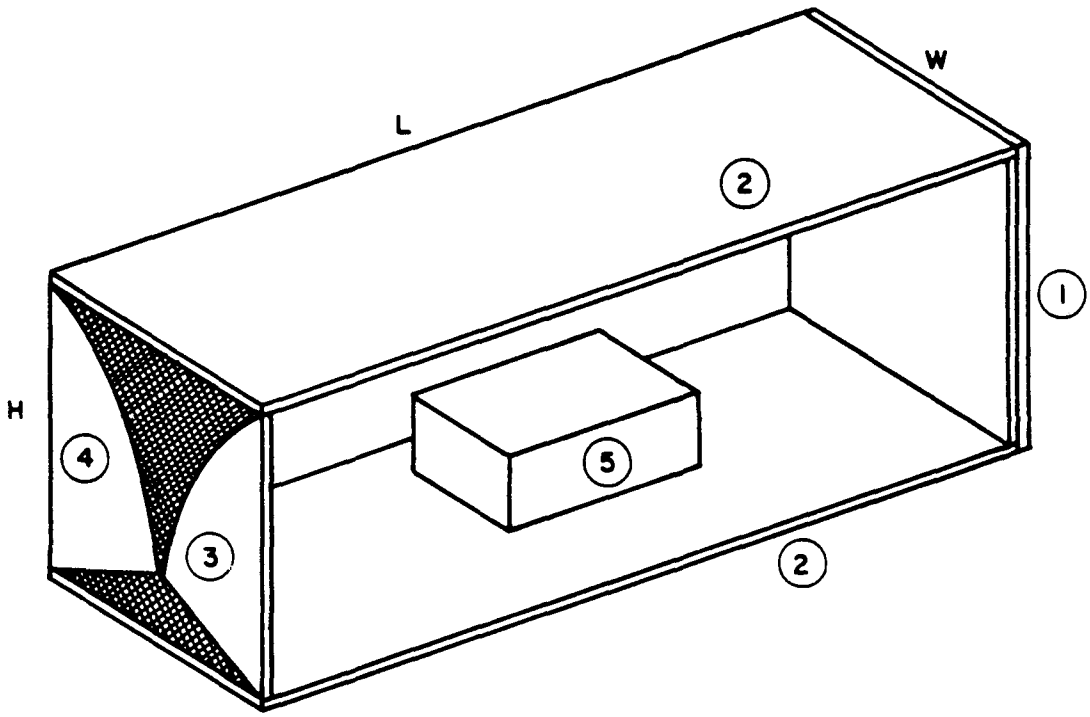

(1) Termination, separated layers of 377-ohm conductive plastic film, joined at ends and connected to conductive planes.

(2) Conductive planes, aluminum slotted longitudinally 1/2 in. o.c.

(3) Input connector, BNC or N-Type.

(4) Wave launcher, 1/16 in. copper on 1/2 in. plexiglass (~log curve).

(5) Test enclosure.

Figure 6-22. Parallel plate line. (Source: ref 6-4)

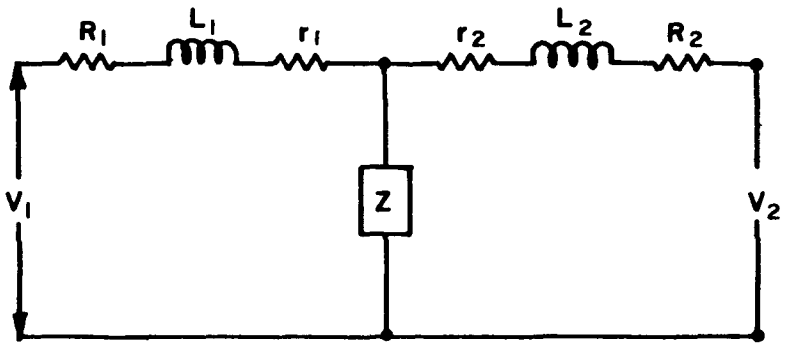

Equivalent Circuit of Measuring Device

R_1, R_2 = series isolation resistors
r_1, r_2 = connection resistances
L_1, L_2 = connection stray inductances
Z = unknown bond impedance
V_1 = input voltage
V_2 = output voltage

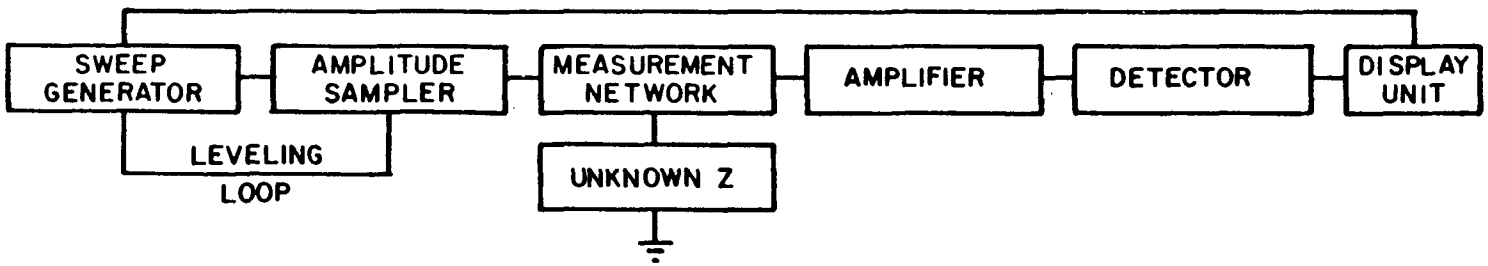

Block Diagram of Sweep Frequency Measurement System

Figure 6-23. Sweep frequency bonding measurement system. (Source: ref 6-4)