CHAPTER 6

EMP AND TEMPEST TESTING REQUIREMENTS

6-1. Outline. This chapter is organized as follows:

6-1. Outline
6-2. Introduction
- *a. Why testing is needed*
- *b. TEMPEST measures*
- *c. Quality assurance (QA) testing*
- *d. Acceptance testing*
- *e. Hardness assessment and validation testing*
- *f. Life-cycle testing*

6-3. Testing requirements vs facility mission
6-4. Susceptibility testing
- *a. Purpose*
- *b. Data analysis susceptibility testing*
  - *(1) Data research*
  - *(2) Analytical modeling*
- *c. Susceptibility testing process*
  - *(1) Importance of early testing*
  - *(2) Laboratory testing*
  - *(3) Cable tests*
  - *(4) Current injection sources*
  - *(5) Scale modeling*

6-5. Quality assurance testing
- *a. Purpose*
- *b. Visual inspection and submittal review*
  - *(1) Inspection principles*
  - *(2) Submarine analogy*
  - *(3) Inspection process*
- *c. QA testing methods*
  - *(1) "Sniffer" testing*
  - *(2) Dye penetrant test*
  - *(3) Limited RFI attenuation testing*
  - *(4) Independence of test organization*

6-6. Acceptance testing
- *a. Purpose*
- *b. Types of tests*
- *c. Optional tests*
  - *(1) Sources of EM illumination*
  - *(2) Direct injection technique*
  - *(3) When cable testing is required*
  - *(4) Checks of completed facility*

6-7. Hardness assessment and validation testing (HAVT)
- *a. Purpose*
- *b. HAVT procedure*

(1) Ideal procedure
(2) Testing the building
(3) Radiating EMP simulators
(4) Limitations of simulators
(5) Data and communication lines
(6) Time and expense of tests
6-8. Life-cycle testing
a. Purpose
b. Test methods
(1) Repeat of acceptance tests
(2) Performance degradation
(3) Buried facilities
6-9. Test methodology
a. Summary of test approaches
b. HEMP field simulation
c. Scale-model testing
d. Direct injection testing
e. Shielding effectiveness testing
f. Laboratory testing
6-10. Free-field illuminators
a. Simulated HEMP properties
(1) Subthreat amplitude testing
(2) Drawbacks of subthreat amplitude testing
b. Waveshapes
(1) Representative waveforms
(2) Nonrepresentative pulse testing
(3) Continuous wave (CW) testing
(4) Drawbacks of CW testing
c. Spatial coverage
d. Large-volume EMP simulators
(1) Free-field simulators
(2) Bounded-wave simulators
(3) Pulsed radiated simulators
(4) Continuous wave (CW) excitation
e. Scale model testing
(1) Purpose
(2) When used
(3) Limitations of scaling
(4) Frequency domain of scaled tests
(5) Effect of scaling on parameters
6-11. Current injection testing
a. Purpose
(1) Transfer functions
(2) Thresholds and uncertainties
(3) Effect of several terminals
b. Direct injection
c. Inductive injection
(1) Current transformer
(2) Advantages of inductive injection

(3) Other methods
d. Methods of current injection testing
(1) Penetrating conductor drive test
(2) Gasketed access panels
(3) Seam sniffer test
(4) EMP cable shield assembly tests
(5) Nonconducting data links
(6) EMP and TEMPEST filter tests
(7) Conducted transient HEMP environment test
(8) Terminal protection device (TPD) tests
6-12. Shielding effectiveness testing
a. Overview
(1) Three types of SE tests
(2) Choice of measurement method
(3) Overall enclosure SE
b. Procedure and description
(1) Low-impedance (magnetic) field SE
(2) High-impedance (electric) field SE
(3) Plane wave SE
c. SE testing summary
6-13. Bonding impedance measurements
a. Purpose
b. Available techniques
c. When performed
d. Q-factor comparison
e. Balanced bridge measurements
f. Insertion loss
(1) Principle of insertion loss
(2) Advantage of method
6-14. Cited references
6-15. Uncited references

6-2. Introduction. From concept definition to design, construction, and the life-cycle phases of HEMP-hardened and TEMPEST-protected facilities, certain testing is required. HEMP hardening, TEMPEST protection, or both may be required for the facility.

a. Why testing is needed. First, testing is needed to identify equipment susceptibilities and to establish hardness requirements, then to prove the concept and model the facility to HEMP. From this testing, the HEMP hardening requirements are developed, the analysis is tested, and shield system modeled and proven. This first phase of testing is called "susceptibility testing."

b. TEMPEST measures. The TEMPEST preventive measures discussed in chapter 8 will determine the shielding requirements.

c. Quality assurance (QA) testing. The second phase of testing begins during construction and is called "quality assurance (QA)" testing. QA testing includes submittal review, material inspection, fabrication and

installation inspection, and onsite testing. QA testing ensures that the specifications for HEMP hardness and TEMPEST protection are fully met.

d. Acceptance testing. The third phase of testing is called "acceptance testing." Acceptance testing is composed of MIL-SPEC-220A and MIL-STD-285 testing, which ensure that the completed facility meets the HEMP hardness and TEMPEST protection requirements. Acceptance testing marks the point at which the user accepts the facility from the construction agency as meeting the required specifications.

e. Hardness assessment and validation testing. The fourth phase of testing begins at or near construction completion and is called "hardness assessment and validation testing (HAVT)" for HEMP and certification tests and procedures for TEMPEST. HAVT is a program that seeks to prove that the method of hardening devised in the concept definition phase has attained the level of hardness required. It consists of various test methods that simulate a HEMP event in conjunction with mathematical analysis. The TEMPEST certification testing requirements and procedures are classified, and the user should refer to the NSA documents for this information.

f. Life-cycle testing. The final phase of testing, life-cycle testing, begins after construction ends and continues throughout the life of the facility. Testing is a combination of a regular maintenance and inspection program and periodic testing of the HEMP and TEMPEST systems to ensure that they retain the original protection requirements throughout the facility life-cycle. This testing includes regular low-level testing of the HEMP hardening components and occasional major testing efforts similar to an HAVT program and TEMPEST shield effectiveness tests to verify that shielding levels are maintained.

6-3. Testing requirements versus facility mission. HEMP and TEMPEST testing requirements vary with the scale and mission of the facility. In general, if the facility is very large in scale and/or very critical in mission, HAVT and susceptibility testing programs are required. If the facility's mission is minor in scale and not extremely critical in terms of mission, HVAT, susceptibility and shield effectiveness testing programs may not be necessary. For small facilities or those for which the mission is not extremely critical, QA, acceptance, and some limited life-cycle testing are required as described in this chapter. For very critical mission sites or very large-scale HEMP systems, complete susceptibility, HAVT, and shield effectiveness testing programs are required along with QA, acceptance, and indepth life-cycle test programs. Table 6-1 summarizes test applicability.

6-4. Susceptibility testing.

a. Purpose. There are three essential reasons to conduct susceptibility testing, which are to establish: the threat in terms of EMP coupling to the facility, the level of equipment sensitivity to the derived threat in terms of damage and upset from ambient to worst case threat, and the required

protection level in terms of decibels required to meet mission requirements, and then to model the protection scheme versus the threat as a check prior to final design. Susceptibility is the testing responsibility of the Government, though it is often done by contract.

b. Data and analysis susceptibility testing. These tests involve analytical modeling, and actual testing to check data and analysis accuracy.

(1) Data research. Data research consists of a documentation search through lessons learned in past similar projects, susceptibility figures for equipment impacted by EMP that will be used in the project, and other useful data such as EMP protection methods in the R&D stage that may be considered for the project.

(2) Analytical modeling. Analytical modeling consists of mathematical calculations, computer codes, and analysis, which usually forms the bulk of the threat resolution. Specialists in EMP phenomenology perform this analysis and generate testing requirements to validate their results.

c. Susceptibility testing process.

(1) Importance of early testing. Susceptibility testing helps the designer evaluate and select the best design option before freezing the design and beginning the construction or fabrication phase. Component and equipment testing provide the information needed to derive protection requirements and prepare specifications for vendor-supplied or specially fabricated protective elements such as EMP/EMI filters, surge arresters, and combinations of these devices. At the facility level, laboratory tests usually are done on mockups, scale models, and fabricated sections of larger structures. For electronic/electrical hardware, the testing may involve components, subassemblies, assemblies,equipments, subsystems, and even whole systems depending on the test requirements, size, availability, etc.

(2) Laboratory testing. Several test techniques are readily adapted to laboratory testing. For measuring the shielding effectiveness of small (equipment enclosures) to room-size enclosures, the large loop test, Helmholtz coil test, parallel plate transmission line, or even radiated sources (continuous wave [CW] or pulse) may be used. Door and seam leakage can be measured using the small loop-to-loop or antenna-to-antenna tests from MIL-STD 285 (ref 6-1) or IEEE 299 (ref 6-2) from low frequencies (a few kilohertz) through the microwave range (gigahertz). The "seam sniffer" can also be used as a qualitative test for door and seam leakage.

(3) Cable tests. Cable (for braided shields, foil shields, and conduits) and connector effectiveness can be measured in the laboratory using the "quadraxial" or "triaxial" test technique. These techniques measure the transfer impedance of the cable assembly which is useful in determining terminal protection requirements. The transfer impedance is directly related to the SE analytically. To measure cable EM radiation, the coaxial test method

also can be used in the laboratory in conjunction with the "seam sniffer" or some other receiver.

(4) Current injection sources. Current injection sources also are useful in laboratory testing. Both direct injection and cable-driving techniques are used to determine the susceptibility of equipment interface circuits to EM-induced transients. The type of source (that is, the waveform) to be used should be determined based on the coupling analysis. These current injection sources also can be used to evaluate the SE of terminal protection devices (TPDs) such as surge arresters and filters. Care must be taken when testing TPDs to prevent their partial degradation (shortened lifetime).

(5) Scale modeling. Scale modeling is another useful way to validate coupling analyses and determine system and/or facility responses to an incident EM field.

6-5. Quality assurance testing.

a. Purpose. QA testing ensures that the intent of the design drawings and specifications are met during construction of the facility. QA for EMP and TEMPEST is an extension of the normal QA procedures in any construction project. QA testing for EMP and TEMPEST validates that the EMP and TEMPEST system is constructed per the design and meets the protection levels required. It is a process of visual inspection of fabrication, construction, and materials, review of EMP and TEMPEST construction submittals, and onsite testing throughout the construction phase.

b. Visual inspection and submittal review. On every project, an inspector will be assigned by the Government for QA purposes. This inspector must become familiar with basic EMP protection methods and must have a source of EMP expertise for the questions that usually arise during construction regarding substitution, construction methods, and engineering changes.

(1) Inspection principles. The basic principles of inspection for high-quality shielding constructions are quite simple and can be learned easily. They consist of a basic knowledge of welding and welding inspection, a working knowledge of HEMP and TEMPEST criteria and how it couples with a facility, and a better than fair measure of common sense.

(2) Submarine analogy. In general, the inspector needs to know only that EMP is an electrical threat which is analogous to water around a submarine: the submarine is the facility and the water is the EMP threat. Conversely, the air in the submarine is the electromagnetic radiation. To keep EMP out and the EM radiation in, the inspector must ensure that all penetrations of the shield (hull) are sealed in some manner. This is done with EMP and TEMPEST filters on conductive lines, EMP and TEMPEST waveguides on utility entrances (gas, water, oil, etc.), fiber optic lines for control and communication lines (or filters), WBC filters for ventilation penetrations, and RFI-tight doors and hatches for personnel entry. It is not

necessary to understand the physics which make these devices work--only that they are in place and RFI-tight at their joint with the shield by proper attachment (weld or gasket). Common sense is far more important than an in-depth knowledge of physics. In the case of submittal review or complicated EMP and TEMPEST problem areas, however, an EMP/TEMPEST expert must be available to the inspector to provide comments and recommendations based on the intent of the design drawings and specifications and his or her own knowledge of EMP and TEMPEST protection methods.

(3) Inspection process. The EMP/TEMPEST expert need not be located onsite and need only spend a limited portion of time for submittal review, construction inspection of critical phases, and EMP/TEMPEST problem resolution. The construction inspector is usually well qualified with the above knowledge to handle day-to-day construction inspection of the EMP/TEMPEST system.

c. QA testing methods. QA testing consists of shielding effectiveness leak detection system (SELDS or "sniffer testing"), or dye penetrant testing, and some MIL-STD-285 type antenna/receiver attenuation testing. All welds should be 100 percent visually inspected.

(1) "Sniffer" testing. SELDS testing is used to test high-quality floor shield seams (100 percent) and also serves as acceptance testing for floors since they are impossible to test once covered by the interior finish. The SELDS technique or similar "sniffer" tests detect defects in shield continuity and are described in detail later in this chapter. These tests are used to test 100 percent of the wall seams, critical penetrations, and roof seams to find and correct repetitive problems early in the construction phase. Two items are of special note. First, these tests should be conducted prior to interior finish, or the finish may have to be disassembled to repair and retest defects. Second, the acceptance testing described in paragraph 6-6 should also be completed as much as possible before the interior/exterior finish is applied.

(2) Dye penetrant test. The dye penetrant test is a simple procedure using white and blue dye (usually) to show weld defects. It should be conducted at random sites or where visual inspection of welds has indicated that a problem may exist or in corners where SELDS testing cannot be performed.

(3) Limited RFI attenuation testing. Limited RFI attenuation testing as described in MIL-STD-285 may be required to test WBC assemblies or door installation onsite if there is reason to believe some problem may exist.

(4) Independence of test organization. Usually an independent test organization is furnished by the contractor for both QA and acceptance testing as set forth in the specifications.

6-6. Acceptance testing.

a. Purpose. The purpose of acceptance testing is to confirm that the constructed facility with all of its penetrations and protective devices in place meets the hardness requirements as stated in the specifications. The MIL-STD-285, MIL-SPEC-220A, and SELDS tests comprise the set of acceptance tests. Based on the uniqueness of the facility or mission, other testing methods may be substituted.

b. Types of tests. The standard EMP and TEMPEST specifications include MIL-SPEC-220A, which describes factory testing for EMP and TEMPEST filters. Also included as a minimum is the MIL-STD-285 test to assess the RFI tightness of a facility as a whole. In brief, the test works by placing an antenna on the in/out side of the facility and a receiver on the other side and measuring the attenuation of the shield to see if it meets the specification. (See MIL-STD-285 for details.) This test evaluates every facet of the facility except for EMP and TEMPEST filters (power/commo) and is used as an acceptance test for the facility as a whole in terms of the EMP and TEMPEST protection system. The test should be performed such that every seam is tested and all penetrations are closely tested. The contractor must correct all deficiencies and then retest the deficient areas. Other tests may be used as necessary for the unique requirements of each facility. This paragraph has described the minimum standard. Paragraph c below describes in detail other testing that may be required. Normally, acceptance testing is done by an independent agency contracted by the contractor as described in the specifications.

c. Optional tests.

(1) Source of EM illumination. For individually shielded elements/subsystems, the SE can be determined using Helmholtz coil illuminators, parallel plate transmission lines, or radiated sources. These sources of EM illumination can be quite small in terms of the working volume since only "box" size units will be evaluated. The "box" can be exposed to any polarization or angle of arrival by rotating the unit being tested.

(2) Direct injection techniques. TPD (filters and surge arresters) SE and subsystem susceptibility at the interfaces (cable connectors) can be measured by direct current injection techniques. As in the case of laboratory testing, the level of threat derived through analysis can be used to assess shield performance. This threat level should be increased in amplitude by the specified design margin (DM) to ensure the DM has been achieved. These tests should be done on prototype equipment at 100 percent of interface circuits.

(3) When cable testing is required. Cable tests are required only if they are delivered as part of the subsystem and are exposed to the HEMP threat. If the facility uses envelope shielding and interior fields are reduced to a "safe" level, no cable testing is required. If cable testing is needed for cables that exit the facility, the same approaches as described in paragraph 6-3 for susceptibility testing can be used.

(4) Checks of completed facility. Facility checks on completed facility construction should include preliminary (before installation of equipment) SE tests on the facility shield and on secondary shields inside the facility such as that for electrical conduit and interior shielded enclosures (including the entry vault). In addition, cable grouping/configuration control should be inspected and nonelectrical and electrical (power) penetration treatments should be inspected and subjected to penetration tests. EMI doors, vents, and other apertures also should be inspected and tested. Penetration control for facility-installed (in the entry vault) TPDs and nonconductive data lines (fiber optic links) should be tested. These tests must be performed on all penetrations.

6-7. Hardness assessment and validation testing.

a. Purpose. HAVT is a post-construction test program conducted by the Government to evaluate the actual HEMP protection provided by design and construction. It ensures that the design requirements have been met and that the full constructed facility meets predicted hardness levels. It also validates predicted coupling paths and equipment susceptibility. HAVT is a program that generally is used only for very large and/or vital mission facilities. This testing is done at the end of construction/fabrication and equipment installation, but before turning over the facility to the user for the operation and maintenance (O&M) phase. The tests should show that the facility as built performs its design function.

b. HAVT procedure.

(1) Ideal procedure. Ideally, it is desirable to illuminate the entire facility, including external cables (power and communication), with an EMP simulator that can produce the threat waveform at threat amplitude. However, state-of-the-art EMP simulators do not permit such a test. Threat-level EMP simulators can produce only the threat criteria amplitude over compact structures or systems (for example, vehicles, small buildings, and missiles). In many cases, the facility under test must be in the near field of a radiating simulator, which means plane wave field propagation is not achieved.

(2) Testing the building. To test the building, both bounded-wave and radiating-type EMP simulators can be used. Bounded wave simulators are parallel plate transmission lines. These lines use an upper conducting surface (wires) over the building and a ground plane on the Earth's surface to which the building is bonded. For good field uniformity, the building should be less than two-thirds the vertical height of the simulator. The illuminator for this system is constructed onsite. To test various angles of arrival, the illuminator must be oriented in several ways.

(3) Radiating EMP simulators. Radiating EMP simulators are large dipole antennas over ground. They can produce threat-level fields at close ranges (50 meters on center line for the transportable EMP simulator [TEMPS]).

However, this range is in the near field and, therefore, except for small facilities, field uniformity or peak field time of arrival is sacrificed.

(4) Limitations of simulators. Neither the bounded-wave nor radiating threat-level simulator can fully illuminate the external penetrants (such as cables and pipes) to certify overall performance. Illumination for larger areas is possible with either pulse- or CW-type radiating sources, but field amplitude is sacrificed. For testing SE, low-level illumination is adequate. The test system, however, must have a dynamic range greater than the SE level. The drawback with low-level testing is that nonlinear TPD effectiveness is not determined. Also, since these TPDs are nonlinear, analytical extrapolation is not adequate. Ferromagnetic material shields also have nonlinear properties (that is, reduced magnetic permeability at high field levels) which would not be assessed at low-level testing. The SE for these shields can be estimated analytically.

(5) Data and communication lines. Penetrants such as data and communication lines are best evaluated using current injection simulators in a cable injection mode. With this method, the simulator signal is induced on the cable shield or pipe and the system response is measured. Current injection simulators are available[4] that can be synchronized to the radiating or bounded-wave simulators or as multiple injection sources to achieve more realism in a certification test. These current injection sources can evaluate TPD performance, including the DMs in most cases.

(6) Time and expense of tests. The test approaches discussed are all very expensive and take a long time to perform. However, if facility certification (with high confidence) is required, they are necessary. These tests can be done while the facility is operating (power "on") and while it is quiescent (power "off") to evaluate temporary upset as well as damage.

6-8. Life-cycle testing.

a. Purpose. The purpose of life-cycle testing is to provide tangible evidence that the EMP shielding system and protective devices have not degraded unacceptable over time. Life-cycle testing needs should be established at the design stage and kept as simple as possible. Intermittent low-level testing of critical penetrations such as RFI doors should be a part of scheduled maintenance procedures. Over longer periods of 5 years or more (depending on mission criticality), a major test program should evaluate the shield as a whole, focusing on known weak points. Paragraph b below describes test methods that may be employed.

b. Test methods.

---

[4]At the Harry Diamond Laboratories/Woodbridge, VA, facility.

(1) Repeat of acceptance tests. In maintaining a facility, the main concerns are the facility shield, cable shields, and penetration control (TPDs and entry vault area). These elements could be retested using the same approaches as described for the certification tests (that is, large area threat-level simulators and current injection devices). This testing would recertify the facility and would be an absolute quantitative measure of facility performance. However, these methods do not permit testing by onsite personnel; the simulators must be brought to the site and erected, and as a result, the cost would be excessive.

(2) Performance degradation. For the recurring periodic surveillance, it is not necessary to measure the absolute performance. What is of primary concern is the possible performance degradation since the facility was certified operational. Thus, these hardness surveillance (HS) tests can be done at a few frequencies and compared with baseline data taken at the time of certification. SE tests on the facility shield can be performed using low-level continuous wave (CW) illuminators. Cable shield and TPDs can be tested using current injection sources. Doors, apertures, and seams can be assessed using the seam sniffer or small-loop tests. This discussion assumes there is access to the facility shield and penetrants as with above-ground facilities.

(3) Buried facilities. In buried facilities, access to the shield and cables is not possible--especially when an outside envelope shield is used. Therefore, the HS approach must be modified. SE of the facility shield could still be tested by CW measurements but the power level or receiver sensitivity (test system dynamic range) may have to be increased. Seam sniffer tests could not be used, but the Helmholtz coil approach could if the exciting Helmholtz coil is installed during construction as a permanent fixture on the structure with the drive terminals accessible. Localized sources also could be used if they are installed at the time of construction. Cable tests may require sense or drive wires inside the cable shield to measure shield SE, with external CW illumination to drive the cables or magnetic loop sensors to sense the leakage during source wire driving. These built-in test approaches will depend on the facility design and therefore no specific approach can be recommended; care must be taken to ensure that the TEMPEST requirements are not compromised. The options must be considered at the time of facility design and the best method selected on a case-by-case basis.

6-9. Test methodology.

a. Summary of test approaches. The various HEMP tests fall into five general classes as summarized below.

b. HEMP field simulation. These tests require large simulators that can illuminate the entire system or subsystem with the required EM fields. HEMP simulation is used to determine coupling paths and levels and to validate hardness.

c. Scale-model testing. During the design phase, testing a scale model of the facility is a cost-effective way of determining potential HEMP problems. For these tests, a scale model of the system must be constructed. The model is illuminated with scaled EM fields (including rise time, fall time, amplitude, and other parameters) and the model response is measured. The response of the real system is then predicted analytically. Scale model testing is used to determine coupling to enclosures, to help conduct full-scale testing, and to assess the effects of changes in design.

d. Direct injection testing. Current injection testing consists of inducing or direct-driving currents on conductors. It is used to determine transfer functions and to measure upset and damage thresholds along with their uncertainties.

e. Shielding effectiveness testing. SE testing as discussed here refers to methods of testing a shield using CW without using HEMP field simulators. Relatively small, low-cost instruments and antennas can be used to probe seams, openings, and gaskets. These methods often are used to measure shield quality during fabrication/construction and degradation over time.

f. Laboratory testing. It is often desirable to perform laboratory tests to evaluate specific designs prior to facility construction.

6-10. Free-field illuminators.

a. Simulated HEMP properties. Several HEMP tests can be classed by the properties of theu simulated HEMP. The pulse amplitude can be threat or sub-threat. The waveshape can be a representative pulse (similar to threat criteria waveform), nonrepresentative pulse, or CW. For pulse-type simulators, the condition of wave planarity (close approximation to a plane wave) must be met. This condition is achieved by the simulator design in bounded-wave simulators, but requires the test object to be in the antenna far field for radiating pulse simulators. Pulsed fields are measured in the time domain. In the case of CW, measurements are taken in the frequency domain. Therefore, in addition to the requirement of being in the antenna far field to achieve wave planarity, there is a requirement to measure both the amplitude and phase at each frequency of the coupled or free-field signal so that the time domain response can be reconstructed. The repetition rate of pulse-type simulators can be single-shot or repetitive pulse. Any of these methods can be used with any of the testing tools to be described later. Some of these methods, though, may always be used with specific testing tools. Each method has advantages and drawbacks as discussed in the rest of this chapter.

(1) Subthreat amplitude testing. Most tests can be done at subthreat or threat amplitude. Subthreat amplitude testing is useful because currents and voltages in a linear system are roughly proportional to the EM field that induces them. Coupling tests can be done at a factor below the expected threat amplitude and the resulting currents and voltages can be scaled up by that same factor for linear systems. The equipment used in subthreat

amplitude tests (either CW or pulse) is less expensive and more readily available than that needed for threat amplitude testing. Subthreat amplitude testing can be done repetitively because the capacitive pulse generator needs less time to charge for lower amplitude pulses. Subthreat amplitude testing can also be done while the system operates without damaging the equipment.

(2) Drawbacks of subthreat amplitude testing. Subthreat amplitude testing has several drawbacks. These translate into advantages for threat amplitude testing. First, the induced currents and voltages are only roughly proportional to the EM field that induces them. No exact proportionality exists because, in nonlinear systems, the load impedance can vary as a function of the voltage across it. This property is one of the main operating principles of transient suppressors--an exponential decrease in resistance when the voltage rises above the firing voltage. Subthreat amplitude testing generally will not reach this voltage level and thus, cannot test transient suppressor response. For this reason, threat amplitude testing has a higher confidence level, especially during the hardness validation. If a system survives several tests using amplitude pulses and shows no damage, it can be considered hard to the test environment. The test environment must be analytically related to the actual threat to obtain final certification of system hardness. Subthreat amplitude testing, in contrast, is often used to determine coupling at the terminals of equipment and components and to validate analyses. The scaled-up data are then compared with threshold values to determine protection requirements. One final advantage of threat amplitude testing is that measurement equipment can quickly detect any significant coupling. The same coupling, scaled down by a factor of 10 or 100, could be undetectable or obscured by noise.

b. Waveshapes

(1) Representative waveforms. The most clearcut testing is by representative waveforms (similar in waveshape to threat criteria waveforms). The amount of analysis required is less and confidence is higher than for nonrepresentative pulse waveforms or continuous wave tests. The simulators currently available produce the double exponential HEMP waveform. Simulator upgrades are in progress to produce the MIL-STD-2169 HEMP wave forms.

(2) Nonrepresentative pulse testing. Nonrepresentative pulse testing is mainly used because threat waveforms are hard to duplicate. Although a nonrepresentative pulse has a waveshape different from the threat criteria waveform, it must contain all spectral components of the threat criteria waveform. Cheaper, more readily available equipment can produce a pulse similar in amplitude and duration, but not in shape. The drawback is that thorough analysis is required to relate the response of a nonrepresentative pulse to the threat criteria pulse response.

(3) Continuous wave (CW) testing. CW testing uses many discrete frequency waves or a swept frequency source within the illuminator bandwidth to excite the system and the response is measured at each frequency. Fourier

transform methods can be used to find the time domain response for any arbitrary waveshape using the measured data base. To determine the time domain response using Fourier transform methods, both amplitude and phase data are required at each frequency. CW testing allows the use of sensitive measurement equipment through synchronous detection and/or signal integration techniques, which, in turn, allows testing at very low amplitudes. Also, continuous wave illumination allows nonstop probing of terminals to measure coupling. The instruments are more easily adjusted so the quality of data is improved, resulting in shorter test times. CW testing directly supports an analysis method that models the system as a network of resistances, inductances, and capacitances, with the analysis performed in the frequency domain. These system elements can be determined from CW testing. Nonlinear transient suppressors can then be modeled and added to the system model and the system response determined as a function of frequency. The time domain response can be derived analytically and related to the threat.

(4) Drawbacks of CW testing. CW testing has several drawbacks not found with pulse testing. It can be a long process, unless computerized, because the response must be measured for many frequencies. Also, the phase of the measured response data must be recorded as well as the amplitude. The phase information is required to determine the time domain or transient response of the system.

c. Spatial coverage. Perhaps the most limiting factor of simulated HEMP testing is the spatial coverage. It is not possible with present EMP simulators to illuminate large areas (for example, several acres) to threat-level HEMP fields. The field strength declines as 1/R (in the far field), where R is the distance from the source. For radiating simulators (pulse or CW), far-field testing is required to obtain the necessary planarity of the EM wave. Thus, different parts of a large system will see different field levels. Also, the radiation-ground interaction causes polarization changes and other contaminating effects. It is not possible to illuminate miles of power or communications lines, which would be necessary to evaluate HEMP threat transients at a penetration using bounded-wave or radiating types of EMP simulators. Penetrations due to long lines can be evaluated using current injection methods in which the HEMP-induced transient injected is determined through analysis or through coupling tests with the EMP free-field simulators (see para 6-11). Details of spatial coverage will be given as each simulator is discussed.

d. Large-volume EMP simulators. Full-scale illumination is usually done at the system or subsystem level using EMP free-field simulators. It is used to determine coupling at all levels of a system for analysis validation. It is also used after construction is complete to demonstrate the hardness of a system as part of the validation process. Since nonlinear transient suppressors are widely used for hardening, threat amplitude testing is usually needed to validate hardness at a high level of confidence. High-level testing of long lines is done by pulsed current injection at the facility entry panel. Field simulators can produce either horizontally or vertically polarized

waves. If the coupling is known for both polarizations, it can be found for any polarization. It is likely, though not certain, that a system which is hard for both polarizations is hard for any polarization. Other polarizations can be obtained by using different simulators or by using different simulator-to-system orientations. To evaluate the coupling for various angles of arrival (both vertical and horizontal), the relative positions of the simulator and the facility under test must be changed. Several angles of arrival should be used to obtain the maximum coupling to the facility and to assess all possible ports of entry (all sides of the facility as a minimum).

(1) Free-field simulators. There are three basic kinds of free-field simulators for illuminating full-scale systems (at least for relatively compact systems). Bounded wave simulators are so called because the waves are mostly confined to a definite volume. This efficient use of energy makes these simulators well suited for threat amplitude testing. Pulsed radiated simulators also can be used for threat amplitude testing. They can handle larger systems, but the pulse amplitude decreases as 1/R (in the far field), where R is the distance from the simulator. Close to the simulator, the fields do not approximate plane waves well, so there is always a tradeoff between amplitude and good plane wave approximation. CW radiators produce very low amplitude, discrete frequency waves over a wide frequency range. The field amplitude declines as 1/R (in the far field) as with pulsed radiated simulators with which the plane wave approximation is realized. Different radiators are used for different frequency ranges. These simulators are specially made to produce CWs.

(2) Bounded-wave simulators. Figure 6-1 shows two bounded wave simulators that produce vertically (top) and horizontally (bottom) polarized waves. The pulses start at one end, travel the length of the simulator, and are absorbed. The wire spacing must be small compared with the highest frequency to be generated. Some bounded wave simulators are made of solid sheet metal. Each simulator has a certain working volume in which a relatively uniform field can be produced. This volume ranges from 10,000 to 500,000 square meters for existing simulators. The field is not completely confined to this working volume, is not a perfect plane wave, and does not have exactly the same amplitude and polarization everywhere within the working volume. Also, testing a large system causes distortion that would not occur in a real HEMP environment. Despite these problems, the bounded wave simulators model HEMP better than any of the other methods to be discussed. Existing bounded wave simulators include ALECS, ARES, and TRESTLE at Kirtland AFB, TEFS at WSMR, and TEFS at NSWC/WOL. Table 6-2 summarizes the properties of these simulators.

(3) Pulsed radiated simulators. Figure 6-2 shows two common pulsed radiated wave simulators. The 20-meter-high inverted cone-shaped monopole produces vertically polarized waves. An example of this type of equipment is the Vertical Electro-Magnetic Simulator (VEMPS). A small horizontal component may be present, depending on the ground conductivity, if no ground plane is provided. In some simulators (such as EMPRESS I), an antenna is attached to

the top of the cone and extended horizontally some distance. It is terminated with resistive elements to the ground. The cone produces the high frequencies (greater than 1 megahertz) needed for short rise time and the horizontally extended antenna produces the lower frequencies. The 300-meter-long dipole produces mostly horizontally polarized waves. One such simulator is the Army EMP Simulator Operation (AESOP). A vertically polarized component of the wave is introduced off the antenna center line. Field maps are available for all the simulators listed in table 6-3. Like the inverted, cone-shaped monopole, the conic section produces high frequencies and the horizontal antennas produce the lower frequencies. Both simulators produce a radiated pulse whose amplitude varies roughly as (sin theta)/R, where theta is the angle away from the conic monopole or dipole and R is the distance from it. Ground effects make amplitudes deviate from this formula and also distort the waveshapes and polarization. Close to the simulator, the radiated pulse is not a plane wave. Therefore, a system under test must be placed at some distance to approximate a plane wave. Existing pulsed radiated wave simulators include the VPD and the HPD at Kirtland AFB, NM; the Harry Diamond Laboratories (HDL) biconic, AESOP, and VEMPS, at HDL, Woodbridge, VA; EMPRESS at NSWC, Solomons, MD; EMPSAC and NAVES at NSWC/NATC, Patuxent, MD; and TEMPS, a transportable simulator. (See table 6-3.)

(4) Continuous wave (CW) excitation. CW testing is used for both qualitative and quantitative measurement of coupling and SE. CW testing can measure only linear system parameters. Figure 6-3 shows a typical CW test configuration for measuring the coupling to a missile. The test system includes: signal source, amplifier, antenna, sensor, and detector. Note that a reference signal is needed to provide phase data. CW testing is usually done at several frequencies or using a swept signal across the HEMP spectrum.

e. Scale model testing.

(1) Purpose. Although limited, this is a useful coupling and analytical validation tool. It is mainly used to empirically estimate fields, currents, and voltages outside enclosures. Coupling on exterior cables and antennas can be measured easily. These cable and antenna currents can then be simulated by current injection for the real system to find the system response. Scale model testing can also be used before real system testing to give a rough idea of what results to expect or to aid in the design. It can show the worst-case direction of arrival and can help in placing the sensors and simulator.

(2) When used. Scale model testing can be done during the design phase for a system when other tests would not be possible. It can spot problems in the HEMP hardness design early enough to permit inexpensive modifications. It can also be used to assess various design modifications that could correct the problems. Two other advantages of scale model testing are that it is adaptable to very large systems and is low in cost.

(3) Limitations of scaling. Scaling, however, is suited only for testing external coupling on the system's exterior boundary. Building material also limits the use of scale model testing. For example, if the real system uses an unusual material, such as a special composite, the EM properties (conductivity, permittivity, and permeability) of the material do not scale in a simple way. Also, seam construction may be hard to scale. Scale models thus are most useful for metallic, enclosed systems such as aircraft, missiles, shielded enclosures, and power distribution systems.

(4) Frequency domain of scaled tests. Scale model testing is done only in the frequency domain (pulse or CW testing). If a system is scaled by 1/2, CW frequencies must be doubled. In terms of pulse excitation for a double-exponential waveform, this is the same as cutting the rise time in half (plus adjusting the deviation and fall time).

(5) Effect of scaling on parameters. Table 6-4 shows how various parameters are affected when a system is scaled down by a factor of M. Typically, a scaling factor less than 50 is used. For large systems, it is best to use a larger scaling factor, but this is not always possible. The main drawback to scaling up the frequency is that rise times must be scaled down and rise times less than 10^{-10} seconds are very hard to produce unless one shifts to a different frequency domain. Another problem is that the conductivity of the material used to construct the scale model should be scaled up. Earth is usually modeled with ordinary soil, but with salt added to raise its conductivity. For other materials, such as steel or copper, the conductivity cannot be scaled properly because there is no material with a large enough conductivity. There is a way to partly solve this problem for building walls or shielding, however. The scaling needs for conductivity and thickness can be ignored as long as their product is kept the same. This method at least scales the conductance correctly.

6-11. Current injection testing.

a. Purpose. Current injection testing has two main uses: to determine transfer functions and equipment susceptibility thresholds.

(1) Transfer functions. To find transfer functions, pulses usually are used, but CWs will also work. Given the coupling on cables and other conductors penetrating an enclosure, a transfer function gives the voltage and/or current at the terminals of equipment and components inside the enclosure. Transfer functions will generally be linear unless transient suppressors are present. The complete calculation of a nonlinear transfer function requires measurements at many amplitudes. However, the usual practice is to determine the transfer functions only for the induced threat amplitudes. The exterior coupling to conductors entering enclosures can be found by analysis, scale model testing, or field simulation.

(2) Thresholds and uncertainties. The other use of current injection testing is to measure susceptibility thresholds and threshold uncertainties

for equipment parts and semiconductors. This test can usually be done in the laboratory and pulses are always used. Several identical items are subjected to increasing levels of current or voltage until they fail. More than one item is tested so that the threshold and its uncertainty can both be found. These data can be cataloged and are useful in designing new systems, equipment, and components. They also allow thresholds and uncertainties to be estimated for existing items.

(3) Effect of several terminals. Both uses of current injection testing become more complex when several terminals must be injected. A building with many types of penetrations or an integrated circuit with 10 or 20 terminals presents problems. These tests are especially difficult if all the terminals must be injected at once with a different amplitude pulses, each with a different phase. Current injection can be done directly onto conductors that carry signals or it can be coupled inductively onto these conductors. The best method will depend on local conditions; for example, direct injection tests require that a cable be disconnected.

b. Direct injection. Figure 6-4 shows one way to inject current directly onto the signal-carrying conductors in a cable. The impedance matrix simulates the normal impedances between the conductors and between the conductors and the ground. For shielded cables, the shield can be used as the return path. In some cases, wires or groups of wires may need individual injection to obtain good simulation. In this type of testing, the cable to be tested must be disconnected as mentioned in paragraph a (3) above. This setup may not be acceptable if it produces significant changes in the operation of any connected equipment. One way to avoid this situation is to leave the cable connected and inject current onto the wires through capacitors. The capacitors let the circuiate normally. However, with this setup, the injected current will move in both directions on the wires. Therefore, care must be taken to interpret the results correctly.

c. Inductive injection.

(1) Current transformer. Figure 6-5 shows a way to inject current onto a cable by using a current transformer. In most cases, the transformer induces currents onto the cable shield and the shield induces the current onto the internal conductor according to the cable transfer impedance.

(2) Advantages of inductive injection. Inductive injection requires larger currents than are used in direct injection, since the shield typically gives more than 20 decibels of isolation. However, this method has several advantages. Impedances between the wires and between the wires and ground do not have to be determined and simulated. The cable does not have to be disconnected, and current induction onto the internal wires better simulates an actual HEMP environment.

(3) Other methods. Several other methods use this same principle. In one, wires are placed next to the cable to be injected. Currents produced in

these wires will induce currents in the cable in much the same way as a transformer, but with no need for a toroidal current transformer. Another method is to inject a current directly onto the cable shield, which induces a current on the internal conductors.

d. Methods of current injection testing. Current injection tests are commonly used to assess penetrations and other discontinuities in a shielded enclosure. Included are bonding tests of penetrating conductors, bonding impedance measurements for enclosure attachments to ground, transfer impedance measurements and other common tests for cable shield assemblies, fiber optic data links, EMP/EMI filters, and terminal protection devices. It should be noted that some current injection tests may disrupt normal facility operations. TPD tests also could result in equipment damage. Therefore, tests on an operating facility must be scheduled for the "off" times, conducted on a different channel, or otherwise arranged to avoid interference. In the case of TPD tests, if potential damage to equipment cannot be allowed, the equipment must be disconnected and replaced with an equivalent load. If the equipment is not sensitive to voltage breakdown at the test voltage, limiting the current may be enough protection.

(1) Penetrating conductor drive test.

(a) The direct drive test is an effective measure of current attenuation due to bonding the cable shield or penetrating conductor at the enclosure wall. Direct drive testing can be used over a range of frequencies below 10 megahertz.

(b) Figure 6-6 shows a typical setup for the direct drive test. The source can be any signal generator with enough output to conduct the test. The detector is a current probe. The shield of the coaxial feed line is connected to the coaxial drive cylinder through a matching resistor to terminate the generator output. The coaxial drive cylinder is a split cylinder that can be clamped around the penetrating conductor. This cyliner terminates at the shielding wall in the characteristic impedance for the transmission line formed by the penetrating conductor and the drive cylinder.

(c) This method measures the attenuation of conducted current induced on the penetrator. The attenuation provided is defined by--

$$A = 20 \log \frac{I_1}{I_2} \text{ db} \qquad \text{(eq 6-1)}$$

where I_1 is the current on the external part of the conductor and I_2 is the current passed through to the inside of the enclosure.

(d) A realistic test configuration requires careful simulation of the source impedance and distributed coupling events. It also may be hard to obtain matching networks that will maintain good operating conditions for the test at higher frequencies (above 30 megahertz). Besides difficulty in matching the impedance for this test, explaining test results at high frequencies (above about 10 megahertz) is a problem. Therefore, care must be taken if these tests are used above 10 megahertz.

(2) Gasketed access panels. Transfer impedance and transfer admittance of gasketed access panels.

(a) EM energy can pass through an imperfect shield seam (gasket) by three different coupling mechanisms: diffusion, magnetic field coupling, and electric field coupling.

(b) The first two mechanisms can be grouped together and their effect can be represented by a transfer impedance. The third can be represented by a transfer admittance. In general, how well a shield performs can be shown by combining the transfer impedance with the transfer admittance. However, the transfer admittance leakage term is small compared with the transfer impedance term. Hence, only a method for measuring the transfer impedance is discussed here.

(c) The transfer impedance of an element (for example, an access panel, or port) is independent of how the shield assembly is incorporated into an overall shielding system. Transfer impedances can be measured in a test fixture and the results can be used in analyses of the system's overall shielding performance. The test fixture is of coaxial geometry, fully enclosing the shielding element being tested.

(d) Figure 6-7 shows the setup for measuring the transfer impedance of a gasketed access panel. External surfaces of the panel and shield carry a current, I_0. This current must flow across the seam before returning to the signal generator. A voltage, V, is induced between the panel, seam, or aperture being tested and the shield. This voltage is then measured by a suitable detector. (This method is documented in ref 6-3.)

(e) The frequency range of validity for the coaxial test fixture is limited by the transverse electromagnetic (TEM) propagation properties of the fixture. At an upper bound frequency for which the wavelength is about equal to the circumference of the fixture's base, higher order modes appear. These modes disrupt measurement reliability. Hence, the frequency is limited on the higher end such that the wavelength is greater than the circumference of the fixture. The frequency range for this test is then from d.c. to the upper bound frequency (about 500 megahertz).

(f) This technique does not directly measure the SE of a given seam, access panel, ventilation panel, or other leakage point. It does measure the leakage due to surface currents on the enclosure. Results of measurements

from this method therefore must be explained in terms of new specifications for allowed transfer impedance or the results must be converted to an attenuation factor. Assuming the latter, since it is easier to measure and interpret the voltage ratio of applied voltage to that detected inside the shield, the attenuation factor is approximately--

$$V_2/V_1 = 50\ w^2\ C_1 C_2 Z_T \qquad \text{(eq 6-2)}$$

where V_2 is the output voltage; V_1 is the input voltage; w is the radian frequency; C_1 is the capacitance per unit area between the shield and the outer shield environment; C_2 is the capacitance per unit area between the shield and the inner conductors of the test fixture; and Z_T is the transfer impedance.

(3) Seam sniffer test.

(a) This test is a qualitative evaluation of SE. It requires a strong source of low-frequency exciting current on the enclosure (not necessarily in the HEMP spectrum) and the "seam sniffer" as a receiver for detecting leaks. The source is usually connected across opposite corners of a shielded enclosure with a magnetic field leakage detector probe (seam sniffer) inside to scan for anomalies (magnetic field leakage). To use a seam sniffer, the seams to be tested must be accessible.

(b) Advantages of this type of test are its simplicity, low cost, and the speed with which it can be performed. Also, these tests can be done at both subsystem and system enclosure levels, providing a method which is useful over the life of the system. The purpose of seam sniffer tests is to detect field leakage in a shielded system. They do not measure the plane wave SE of the enclosure. The seam sniffer is a useful tool in hardness surveillance to detect degradation of enclosure SE. In this testing phase, measured values are compared with baseline data for the enclosure.

(c) The sniffer also can be used to detect leakage of shielded cables/connectors by driving an internal source wire with a current generator and measuring the external magnetic fields.

(d) Another use for the sniffer is to measure leakage at door seals, access panel gaskets, and other points which results from surface currents induced on the enclosure.

(e) Commercially available sniffer models operate only at a single frequency, which somewhat limits their usefulness in determining leakage over the HEMP spectrum. However, if baseline data are available, degradation can be detected easily.

(4) EMP cable shield assembly tests.

(a) Performance requirements. Cable shield assembly performance requirements can be verified by combining analysis with tests. The type of analysis and test--and the balance between the two--will depend on the performance requirements for the cable shield assembly. A test specification will be derived from the performance specification. Verification of the test specification will, in turn, allow verification of the performance specification through an analysis connecting the two. The accuracy of the verification therefore depends on test and analysis accuracy. The analysis and associated test requirements depend on the following factors: kind of performance specification, cable configuration (one-dimensional or multidimensional), environment (wide-band pulse or narrow-band pulse), and test configuration (method of excitation, cable termination [shield and internal], configuration of internal conductors, and measurements). These factors are not all independent. For example, the test configuration depends partly on the environment.

(b) Performance specification. Each specification describes the performance level environment and accuracy to which the performance must conform. The performance specifications can be stated in terms of either transfer impedance or SE. The verification test will depend on the category and measurement technique.

(c) Cable configuration. Cables can be divided into two categories: one- and multidimensional types. The one-dimensional category includes all cables that have only two ports (connectors). The multidimensional category includes all cables with more than two ports. Branched cables and multiport harnesses fall into the second class. The object of the verification test is to expose each section of the shield to a controlled, measurable environment. This goal becomes harder to meet as the dimensionality of the cable increases.

(d) Cable environments. The cable shield environments used in the test can be divided into two categories: narrow-band CW or broadband pulse. CW environments are preferred due to the relative simplicity of the required instruments. However, both the amplitude and phase of internal-conductor-induced voltages and currents must be measured to assess the time doman (pulse) response. Various components of the environment can be used in the test, including E-field, H-field, conducted current, and any combination.

(e) Excitation method. The cable and connector shields can be driven in one of three configurations using: 7 quadraxial, triaxial, and coaxial test fixtures. These configurations usually are coupled directly to

the environment generator. The environment can thus be classified as a conducted surface environment.

(f) Terminations. Terminations of the inside cable conductors can vary among short, open, and matched terminations of the coaxial regions formed by the test fixture. Matched terminations are preferred to eliminate reflectors on the cable.

(g) Demonstration and test methods. Table 6-5 lists different methods for doing demonstrations and tests for quality assurance. An electrical schematic of the three cable-only methods is shown in figure 6-8. The system-level method applies to a wide range of shielding elements. Hence, it cannot be shown by a simple diagram. However, it is a good alternative for ensuring quality after production. Direct injection can be used in all cases. An internal return can be used in the triaxial configuration; it is required in the coaxial configuration. However, the generator and receiver locations could be exchanged to yield a configuration in which the shield is exposed to a localized field and the response is measured in terms of the internal currents, voltages, or both. The system-level configuration can use direct or radiated methods of exposure. The cable complexity is limited in the quadraxial and triaxial configurations. Although fixtures have been built to test branched cables in each of these configurations, the cost increases for very complex cables. The fixture termination often is the characteristic impedance of the fixture. However, in the triaxial configuration, a shorted termination often is used along with pulse excitation. Cable terminations are optional. Open, short, matched, actual cable loads, or all four are possible in all test configurations. However, the shorted terminal configuration usually is used in the coaxial test. The response measurement depends on the terminal configuration in all but the coaxial method. In this method, the measured component is usually a magnetic field. The E-field component could also be measured, though, depending on conditions.

(5) Nonconducting data links. Nonconducting data links are a desirable alternative to conducting cables in many applications. Since fiber optic cables and dielectric waveguides are nonconductors, HEMP and TEMPEST fields will not couple to them and hence no surface current is induced if the fiber optic cable or dielectric waveguide is not covered by a metal layer for physical protection. For the nonconducting case, the HEMP and TEMPEST protection is reduced to control over the POE of the link into a shielded enclosure. Nonconducting links of the type referred to (optical or dielectric waveguide) are afforded POE control by waveguide-beyond-cutoff entry tubes through the enclosure wall. These entry tubes are apertures and are tested using the aperture test techniques discussed in paragraph 6-10. To evaluate leakage of these entry tubes properly, they must be filled with the dielectric material used for the data link because the tube plus data cable represent a dielectrically filled waveguide which affects the cutoff frequency.

(6) EMP and TEMPEST filter tests.

(a) Response characteristics. The standard approach for measuring the response characteristics of an EMP filter is shown in figure 6-9. The signal generator should either be swept through the entire frequency range of the pass and stop bands of the filter or enough discrete frequency points should be measured to construct a smooth, continuous response characteristic. The d.c. supply should be set to deliver the full rated d.c. load or the d.c. equivalent RMS for a.c. filters. Buffers in the d.c. circuit are provided to isolate the d.c. supply from the RF signal. The receiver measures the filter's attenuation as the magnitude 10 log P_{INPUT}/P_{OUTPUT}. For filters that will be used to pass digital information, the receiver will measure the phase difference of the input and output signals. This phase difference can be used to find the frequency-dependent delay curve for the filter. For filters designed to transmit a.c. or d.c. power, the voltage drop can be measured as described in MIL-F-15733 (ref 6-4) or by the response measurement shown in figure 6-9. The main drawback of this method is that it uses matched input and output terminations for the filter. When active loads are connected to the filter, they will not remain matched over the entire HEMP and TEMPEST spectrum and the response to actual load conditions will be unknown. Another method is to make a detailed network synthesis to generate the response characteristic. In this case, the scattering ("S") parameters of the filter are obtained through reflectivity measurements using the test setup shown in figure 6-10. The filter response for any load (active or passive) can then be determined analytically. The "S" parameters reduce to voltage reflection and transmission coefficients when characteristic load and source impedances are used (ref 6-5).

(b) Dielectric withstanding voltage. This test can be done as described in MIL-F-15733. The dielectric withstanding test voltage should be 2000 volts or greater.

(c) Source-load impedances. The response characteristic also can be measured using the instruments shown in figure 6-11 to determine the effects of variable impedances. Characteristics should be measured for the frequency range representing the entire pass and stop bands of the filter. The output data will be much like that described in paragraph (a) above. If the response characteristics are measured this way, the test prescribed in (a) above can be ignored.

(7) Conducted transient HEMP environment test. The test configuration shown in figure 6-12 can be used to subject the EMP filter to the transient environment caused by a HEMP. The detector should be used to ensure that no undue saturation effects occur. The filter should be exposed to a prescribed set of damped sinusoidal drive waveforms, as determined from the HEMP cable-induced analysis:

$$F_{1-N}\ (Q_{1,N})\ A_{1-N} \qquad \text{(eq 6-3)}$$

where F_{1-N} is a set of fundamental frequencies as a function of damping, Q_{1-N},
and amplitude, A_{1-N}. After this test, the response characteristic should be verified as described in paragraph d above.

(8) Terminal protection device (TPD) tests. To ensure that the EMP TPD conforms to the manufacturer's specifications throughout its life cycle, quality assurance and HS requirements should be developed as described in paragraphs (a) through (k) below. The inspection procedures are divided into three groups: visual inspection, analysis, and testing. Compliance with each specific TPD requirement depends on one or more of these classes. In some instances, different inspection requirements are stated.

(a) Transient power reduction. The EMP transient power reduction of the TPD should be measured for performance evaluation as shown in figure 6-13. The optional bias supply should be set to give the full rated load or the d.c. equivalent (RMS) for a.c. circuits. These values should be measured to assist in device selection during the design phase. A similar test using current injection sources should be performed during the certification phase to ensure proper installation of the TPD. If the configuration shown in figure 6-13 is used, the protected and unprotected powers can be found from--

$$P = E^2/R \qquad \text{(eq 6-4)}$$

where P is the protected or unprotected power in watts; E^2 is the area under the square of the voltage-versus-time curve; and R is the load, with 50 ohms chosen for convenience. Since MOV service life can be reduced by these tests, it is recommended that a current-limiting resistor be placed in series with the source (more than 100 K ohms) and only the breakdown observed. The pulse generator must be able to supply a square-wave pulse with the following characteristics: risetime, 4 kilovolts/nanosecond maximum; amplitude, 3 to 5 times the TPD static breakdown as a minimum; and pulse width, 10 microseconds. The pulse test should be conducted a minimum of 5 times on a statistically significant sample for each device to determine average operating characteristics. Lead lengths in the test fixture must be kept short (low inductance) to characterize the TPD (ref 6-5). Power line surge arrester tests on an active power line must be synchronized to the 60-hertz power line voltage to avoid problems with power follow-through currents. To do this, the direct injection pulser is synchronized to fire at the zero crossing of the 60-hertz signal. Due to the short duration of the HEMP injection pulse synchronized to the zero crossing, the surge arrester will recover (extinguish), removing the possibility of follow-through currents. This method should be followed for all TPD tests on active power lines. Power reduction also can be measured using the setup shown in figure 6-14. In this case, the load should simulate the actual protected subsystem impedance. The power can be found from--

$$P = \text{integral, from } 0 \text{ to } t_D\text{, of } V(t)\ i(t)\ dt \qquad \text{(eq 6-5)}$$

where $t1_D$ is pulse duration and the power-versus-time curve is the point-by-point product of the voltage (V(t)) and current (i(t)) versus time curves.

(b) Impulse ratio. The static (d.c.) breakdown voltage should be measured using the setup shown in figure 6-15. The impulse ratio should be calculated as the ratio of the voltage at which breakdown occurred in the test described in (a) above to the d.c. voltage at which breakdown occurs as measured in figure 6-15. The impulse ratio represents the response time performance of the device when subjected to the fast rate of rise-time pulses. This ratio is a good indicator of how the device will respond to the HEMP-induced signal. It should be measured for several different rate-of-rise pulses to evaluate the protective system design. The impulse ratio is given by--

$$IR = \frac{V_{b\ impulse}}{v_{SB}} \qquad \text{(eq 6-6)}$$

where $V_{b\ impulse}$ = voltage of breakdown for a given impulse rise time and v_{SB} = voltage for static breakdown.

(c) Clamping voltage. This is the steady-state voltage appearing across the device after breakdown has occurred, as determined from the voltage curve given in paragraph (a) above.

(d) Operating impedance. This is defined as the ratio of device voltage to device current at rated current through the device.

(e) Bipolar performance. The pulse power attenuation should be measured as described in (a) above for both positive and negative pulse polarities for bipolar devices. For unipolar devices, the inability to suppress surges of opposite polarity is evident from the TPD's physical/electronic properties.

(f) Isolation impedance. The isolation impedance of the TPD should be measured using an impedance bridge. This measurement should be taken after the normal operating voltage has been applied for a minimum of 1 minute. Both the device resistance and the capacitance should be determined.

(g) Turn-off characteristics. If the optional d.c. supply is used as in (a) above, the turn-off time can be measured directly from the voltage curve for different bias conditions. If the optional d.c. supply in (a) above is not used, the operating circuit can be analyzed to ensure that the breakdown will not be sustained due to the normal characteristic voltage level and source impedance.

(h) Shunt capacitance. The shunt capacitance should be measured as in paragraph (f) above using a capacitance bridge.

(i) Insulation resistance. The TPD insulation resistance can be considered satisfactory if no external breakdown occurs during the pulse power test (para (a) above) and if the sample devices continue to operate within specifications after 5 pulses.

(j) Environment. The TPD should be tested as described in MIL-STD-202 (ref 6-6), for proper operation under natural environmental conditions.

(k) Grounding, mounting, and lead length. Visual checks should be done to ensure proper grounding and mounting as required. A visual check should also be done to ensure a minimum lead length in installations. The lead length-to-width rates should be such as to provide a low inductance band (length less than 3 times width).

6-12. Shielding effectiveness testing.

a. Overview.

(1) Three types of SE tests. Among the enclosure tests that call for the production and measurement of EM and RF fields are three types of SE tests. These tests correspond to three types of fields. The impedance of the EM and RF fields is given by the ratio E/H, where E and H are the magnitudes of the electric and magnetic fields, respectively. For low-impedance fields, this ratio is small; thus, low-impedance fields are termed "magnetic." If the ratio is large, E is much larger than H and the high-impedance field is termed "electric." When the ratio of E to H is equal to the impedance of the medium in which the field exists, the wave is called a "plane wave."

(a) The field impedance can be related to the nature of the field's source. In general, plane wave excitation results from fields for which sources are spatially far from the object being excited. "Far" is a relative measure that depends on field frequency.

(b) In contrast, electric or magnetic fields are important for closer object-to-source distances. Thus, for HEMP, the system outer skin will be excited mainly by far-field plane waves whereas internal enclosures are excited by fields generated nearby, such as fields that result from openings and those caused by currents flowing on cable shields. When external system surfaces diffract and reflect the EM energies, these "secondary" sources will result in near-field electric/magnetic waves.

(2) Choice of measurement method. Another factor has bearing on the choice of measurement method according to field type. In general, the SE of an enclosure will be least for magnetic fields at low frequencies (less than

100 kilohertz). The plane wave SE and electric field SE increase in that order.

(3) Overall enclosure SE. An enclosure can be formed from several different shielding materials of differing SE. The overall SE for the enclosure will be compromised by the need for certain points of entry (POEs) as well as undesired leaks at joints, openings (apertures), and access panels. Verification tests are done mainly to assess the SE of an overall enclosure, such as a shielded drawer, rack bay, or enclosed system, rather than to assess the intrinsic SE of a given material. Therefore, tests on the POEs in an enclosure are normally emphasized.

b. Procedure and description. Standard test procedures are MIL-STD-285, IEEE-229, and NSA-No. 65-6 (ref 6-7). A good comparison and review of these methods are in reference 6-8. The first two methods are being revised to reflect the use of more modern test equipment and antennas. The most recent method should be used for testing. Further guidance on these methods is in reference 6-9.

(1) Low-impedance (magnetic) field SE. The SE of low-impedance fields can be measured in the frequency range of 100 hertz to 10 megahertz. It should be noted that these tests do not provide the plane wave SE of the enclosure but are useful in quality assurance of the structure as built. The tests described for this measurement are the small-loop-to-small-loop, Helmholtz coil, and parallel strip line methods. The proper frequency range for each method is noted under the related paragraphs below. These methods require a calibrated 50-ohm step attenuator. A calibrated signal generator can be used to calibrate the attenuator. This attenuator should be suitable for measuring insertion losses above the shielding requirements specified for the tested element.

(a) Small-loop-to-small-loop method. This test evaluates the enclosure response to sources near its walls and is especially useful for assessing doors, seams, bonds, and absorption loss of the material. The small-loop-to-small-loop test provides a uniform measurement from 100 hertz to about 10 megahertz. Figure 6-16 shows the equipment arrangement for this test. An option to this test setup might be an XY plotter, which would be used along with the receiver to record the attenuation at a prescribed set of receiving antenna locations to determine the peak and minimum attenuations as well as an average value. The transmitting antenna must be located external to the enclosure and placed 0.305 meter from the wall tested. The receiving antenna must be inside the wall being tested (fig 6-16). The receiver loop should be oriented for maximum coupling to the transmitter loop for each measurement location. Low-impedance shield leakage tests should be done at the following places: parallel to vertical seams at a minimum of three points along the longitudinal axis of the enclosure; parallel to horizontal seams at a minimum of two points around the enclosure; parallel to opening seams of all access panels and doors; and centered over each type of window or aperture. Figure 6-17 shows typical proposed measurement points for access panels and

corners of the enclosure. The figure also indicates the distances antennas are to be placed from the seam being tested. An option is to use an XY plotter (para (1) above) and scan the detecting loop over a prescribed test path. SE would be recorded as a function of position inside the enclosures. The attenuation (peak, minimum, and average) can be read directly from the plot, provided the plotter was calibrated correctly. The SE for this procedure is defined as the decibel setting of the attenuator needed to obtain a constant reference level at the detector with and without the shielding. The attenuation is--

$$A = 20 \log_{10} (E_1/E_2) \qquad \text{(eq 6-7)}$$

where E_2 and E_1 are the voltages induced in the receiving antenna with the shielding in place and with it removed, respectively, without changing the relative separation or remaining environment between the antennas. To measure E_1 (no shielding between antennas), the antennas must be placed in the same relative position with respect to each other as well as to the cables and equipment required in the test. The setup is the same for measuring E_2. Care must be taken to ensure that E_1 is measured at a point relatively free of reflections. There are several advantages to this method. The impedance of the fields radiated by the loop can be calculated by well known formulas, thus making overall theoretical calculations easier. Also, since the impedance of the field is a function of the loops' separation, the impedance level can be varied by spacing the loops closer or farther apart. The small-loop method can be used on widely varying sizes of enclosures, from system to drawer levels. Another good point of this method is that a small detecting loop minimizes the effect of instruments on the measurement. In addition, fields can be produced either inside or outside the enclosure so the experimental setup is flexible. Finally, no special equipment is needed for this test and the setup is relatively simple. Some severe drawbacks of the small-loop test tend to negate the advantages. First, the generated field is highly nonuniform. Hence, unless accurate alignment is maintained between transmitting and receiving antennas at each test point, the SE measurements will be hard to interpret. Also, because the field is nonuniform, it is difficult to illuminate hard-to-reach joints, making them harder to test. Another drawback is poor dynamic range, which results from inadequate field strength for a detector at a distance much greater than the loop diameter. The field coupled between two loops at close spacing varies inversely as the cube of the loop centers' separation. Thus, small errors in the measurement of loop spacing may cause errors in seam leakage measurements, making results less repeatable. Repeatability for this method is normally ±3 decibels, depending on the operator's skill. There are frequency limitations as well. For example, large errors can occur if a singly loaded loop is used unless its diameter is less than 0.01 wavelength. Hence, for a 12-inch receiving loop, accuracy can be kept within acceptable limits only at frequencies lower than 10 megahertz.

(b) Helmholtz coil to small loop method. This method produces a uniform field distribution over the entire enclosure, with coils completely surrounding the shield enclosure. The method measures SE from 3 kilohertz to 1 megahertz when SE is as defined for the small-loop method. Figure 6-18 shows the equipment arrangement for this test. The small-loop detector can be either a small-diameter loop (circumference small compared with a wavelength at the test frequency) as in the small-loop-to-loop test or a seam sniffer. The seam sniffer has its own display; for the loop-type test, see the detector instrumentation described for the small-loop-to-loop test. The Helmholtz coil method is useful for detecting leakage of the enclosure due to seams, doors, panels, and other apertures, but does not provide the plane wave SE of the enclosure. Therefore, it is a good tool for QA and HS. It is also useful as an HS tool for comparing measured values with the baseline data. As figure 6-18 shows, the method applies only to accessible free-standing enclosures. It could be applied to facilities for HS or inaccessible enclosures if the loops were installed permanently on the facility/enclosure with drive terminals accessible. Specific advantages of this method are the following. The field uniformity is good over a relatively large area and the intensity of the generated field is fairly strong, giving good dynamic range. Locating seam and joint defects is made easier by the field uniformity. Therefore, measurement time and cost are relatively low compared with other methods. Also, because the orientation and position of the Helmholtz coil remain constant, the measurement is very repeatable. One of the biggest drawbacks of this method is the relatively complex test setup. The size of the test enclosure is limited with increased frequency (loop circumference must be small compared with test frequency wavelength) because field uniformity can only be maintained by reducing the Helmholtz coil dimension at higher frequencies. Perhaps even more important is that leakage can be detected through seams and joints that are parallel to the direction of current flow in the Helmholtz coil. Therefore, to ensure that the total enclosure is covered, at least three orientations of the coil are needed. These correspond to three orthogonal orientations of all leaky joints. Another consideration in evaluating this method is that it is clumsy to use with large and even medium-sized enclosures. The size of the Helmholtz coil needed for a uniform field can become quite large for many test setups, which limits the upper frequency for testing.

(c) Parallel strip line method. This method is essentially a current injection scheme in which a current is induced on one side of the enclosure and detected on the other. As an alternative to the methods just discussed, it is well suited for testing seams and joints (ref 6-10). A shortcoming of this method is that the plane wave SE is not determined--only the attenuation through the surface and leakage at joints and bonds is assessed. The parallel strip line method measures SE from 3 kilohertz to 30 megahertz. Figure 6-19 shows the typical test arrangement for this method. The load resistors usually are 50 ohms with a 50-ohm signal generator as the source. Typical points where measurements should be taken are access panels and doors, bonding seams, and gaps. The drive and coupled currents are measured with a standard commercial current probe. This parallel strip line

method measures attenuation due to the enclosure material (absorption loss caused by skin effect) and leakage due to joints, gaps, seams, and other POEs. The attenuation is given by--

$$A = 20 \log_{10} \left(\frac{I_1}{I_2} \right) \qquad \text{(eq 6-8)}$$

where I_1 is induced test current and I_2 is the measured current transferred through the surface. This method has advantages mainly in that it uses direct drive, in which the shield elements under test are tightly coupled to the test source. This tight coupling provides a low-cost, efficient, fairly simple technique. Other advantages are the ready supply of test equipment and the direct use of test results in evaluating the leakage of joints, seams, and other areas. The parallel strip line method allows specifications to be set and tested before the system is built. This allows design changes before and during system construction. Some major drawbacks of this method result from the following properties. The method is hard to use at high frequencies (above 30 megahertz). Also, it tests only the penetration loss through the enclosure surface due to diffusion and leakage at joints and seams. When the enclosure is illuminated by radiated waves, this method does not account for the reflection loss of the surface, which can be substantial compared with the penetration loss. In general, this method is best suited for testing seams, joints, and other leakage points of an enclosure during all phases of the system's life cycle. The seam sniffer approach is simpler to use in detecting seam leaks but is not as well controlled.

(2) High impedance (electric) field SE.

(a) The method most commonly used for measuring the SE of enclosures with high-impedance fields is the antenna-to-antenna test described in MIL-STD-285 (ref 6-2). Test frequencies are limited to 15 megahertz due to the standard test arrangement. For a high-impedance field, (beta)r = 2(pi)r/wavelength <<1. For the antenna-to-enclosure distance specified in MIL-STD-285 (r = 12 inches), the frequency is limited to 15 ohms to maintain high impedance. The range can be extended to higher frequencies by using antennas with larger apertures (for example, parallel plate lines with open load impedance) to generate a field impedance that differs from the plane wave impedance of 377 ohms. At high frequencies for which standing waves can affect measurement accuracy, a method for averaging may improve results.

(b) The leakage due to high-impedance fields can be measured for an enclosure in the frequency range of 3 kilohertz to 100 megahertz using the antenna-to-antenna method and adjusting the antenna's length and distance from the enclosure. This tests the performance of shielded walls located near the electric field source. It is especially useful for testing seams, gaps, and

bonding joints. Since very little leakage of this type occurs below 10 megahertz, tests should be conducted only above 10 megahertz.

(c) Figure 6-20 shows the equipment arrangement for this test. Details can be found in MIL-STD-285.

(d) The transmitting antenna must be placed outside the enclosure, 0.35 meter from the shielded wall. The receiving antenna must be inside the enclosure, 0.35 meter from the wall. The receiving antenna is placed inside to minimize interference from other sources that would influence the measurements. The antennas must be oriented (vertical and horizontal polarizations) for maximum signal in each measurement of E_2.

(e) High-impedance field leakage tests should be done at the following locations: parallel to vertical seams at a minimum of X points along the longitudinal axis of the enclosure; parallel to horizontal seams at several points around the enclosure; parallel to opening seams of all access panels and doors at several points; and centered over each type of window or aperture. The number of test points is a matter of engineering judgment based on seam length, seam fastener spacing and related factors.

(f) The shield leakage for this procedure is defined as in the small-loop method (para 1 above).

(g) This method is useful for the following reasons. First, the wave impedance from a dipole can be calculated easily from well established formulas. The wave impedance of a dipole (Z_D) is given by--

$$Z_D - \frac{E(\text{theta})}{H(\text{phi})} = n \left(\frac{1 + jBr - B^2r^2}{jBr - B^2r^2} \right) \qquad \text{(eq 6-9)}$$

where theta and phi are coordinate system variables; n is 377 ohms; B is (pi)/wavelength; and r is the distance from the antenna. In addition, the test equipment is readily available and the setup is relatively simple. Another good point is the large range of enclosure sizes that can be tested.

(h) This method also has drawbacks. The field is very nonuniform, which makes test results hard to interpret. Also, monopole antennas can receive reflections from the local environment, making reliable and repeatable measurements quite difficult. In addition, the monopole is subject to the same narrow bandwidth as the dipole. Finally, for good shields, a large dynamic range is required.

(3) Plane wave SE. SE measurements using plane waves provide both the reflection and absorption loss of an enclosure. The plane wave SE can be measured using the methods described in paragraphs (a) and (b) below.

(a) Antenna method. This method uses common sensors such as rod, dipole, horn, or other directional antennas for detection. Common types of source antennas used are: small-loop, monopole, dipole, conical logarithmic spiral, pyramidal horn, and log periodic. This method measures an enclosure's SE from 100 kilohertz to 1000 megahertz. At the lower frequencies, the loop, rod, or dipole antenna can be used. At higher frequencies, horn log-spiral or log-periodic antennas are used. Figure 6-21 is a sample setup using a dipole antenna. Other antenna setups are similar with possible variations in the relative separation of antennas and shielding enclosure wall. Antennas shall be oriented (vertical or horizontal polarization) for maximum coupled signal in each frequency measurement of E_2 for the shielding enclosure. Plane wave SE tests should be done at the following locations: centered at the midpoint along the longitudinal axis of the enclosure, both sides, and centered along the lateral axis of the enclosures, both sides. The SE for the antenna method is, again, as defined for the small-loop test. To achieve the required plane wave field, the test object must be in the far field of the antenna. To achieve the required dynamic range, high output power or good receiver sensitivity is required. An alternative is to use a phase-locked receiver so very narror bandwidths and a wide dynamic range can be achieved. The antenna method can be assessed based on the types of antennas used to generate and detect the fields. The small-loop antenna method is subject to the same basic advantages and drawbacks as the small-loop-to-small-loop method for low-impedance fields. Advantages of using monopole and dipole antennas are test simplicity, readily available equipment, and easily tuned antennas. Shortcomings are its susceptibility to reflections from local objects, observers, and other environments, making measurements less repeatable and less reliable. Also, the impedance of the dipole may change with application configuration, leading to a loss of antenna efficiency. Another drawback of this method is the relatively narrow antenna bandwidths which make it necessary to use adjustable antennas or several antennas. With conical logarithmic spiral antennas, the main advantages are increased antenna bandwidth and the ability to generate circularly polarized fields that minimize the seam directionality effects found with linearly polarized waves. A rather severe drawback of this method is the large size of antenna needed for most of the HEMP spectrum.

(b) The parallel plate method. This method generates uniform fields of low impedance, high impedance, or plane wave, depending on how the parallel plate line is terminated at the load end. Termination in a short circuit yields a low-impedance field; termination in an open circuit gives a high-impedance field; and termination in the line's characteristic impedance produces a plane wave impedance field. This method has greatest use in testing relatively small enclosures due to implementation problems associated with constructing large volume parallel plate lines. For large enclosures, it is possible to use the conducting floor as the lower plate (that is, the enclosure bonded to the lower plate of the line). The SE measurement range is from 3 kilohertz to 20 gigahertz. Figure 6-22 shows a typical test setup for the parallel plate method. The detector is a small-loop antenna with attenuator and receiver inside the enclosure. More complete details of this

method and how to construct the parallel plate transmission line can be found in Air Force Systems Command Handbook DH 1-4 (ref 6-11) or in AFWL Sensor Simulation Notes (ref 6-5). Measurements shall be taken with the enclosure oriented in the following directions: longitudinal axis parallel to the axis of the parallel plate; longitudinal axis perpendicular to the axis of the parallel plate; and lateral axis perpendicular to the axis of the parallel plate. The SE for this method is defined by equation 6-7. Care must be taken that the relative dimensions of the enclosure under test do not exceed approximately two-thirds the height of the parallel plate line. This method may be the best overall test for enclosure SE. There is no limit to enclosure size as long as the height restriction is met. Thus, very large lines are needed for large enclosures. One of the main advantages is that the field generated is relatively uniform within the bounds of the practical parallel region. For large enclosure measurements, a practical parallel strip line can be constructed of a few (four or five) parallel wires placed along either side of the enclosure. Other advantagess of this method include all of those for the loop antenna tests as well as several more related to commercially available field sensors developed jointly by AFWL and the EG&G Corporation. An important feature of the sensors is that they can be calibrated based on theory with a high level of accuracy. In addition, these sensors are standard in the EMP community and are very credible. They offer a wide, useful bandwidth with more predictable performance than other loop test methods. The main disadvantage is a relatively poor response at low frequencies.

c. SE testing summary. Table 6-6 is a general summary of the frequency ranges and uses of the tests specified in MIL-STD-285, IEEE 299, and NSA-No. 65-6. In military HEMP and TEMPEST shielding, MIL-STD-285 often is the specified test. However, practical testing guidance is presented more clearly in IEEE 299. The NSA specification is normally cited for testing enclosures that house electronic equipment and that produce their own EM emanations. In this case, the shielded enclosure is used chiefly to reduce the equipment-produced emanations.

6-13. Bonding impedance measurements.

a. Purpose. The purpose of bonding impedance measurements is to ensure that a low-impedance connection is obtained to the system ground. This connection is required for all protection components that must be ground-referenced, such as filter elements and surge arresters.

b. Available techniques. Several test techniques are available, including Q factor measurements of a resonant circuit with and without the unknown impedance, balanced bridge measurements, and insertion loss measurements.

c. When performed. These bond impedance measurements should be performed as part of the QA testing during the equipment installation/ facility construction phase and whenever protection components or equipments are removed or replaced as part of the HS/HM activity.

d. Q factor comparison. This method tests bonding impedance by incorporating the bonding conductor into a resonant circuit and relating the change in the Q of the circuit to the proper impedance value. The major advantage of this test are its usefulness during the full life cycle of the system and the relatively low cost of these measurements.

e. Balanced bridge method. This is a standard method for measuring impedances in which the unknown bond impedance is compared with a known value in a balanced bridge configuration. The advantage of this method is much the same as for Q factor comparison (para d above). A constraint is that, at high frequencies, measurements are limited to 1 ohm or greater. In addition, measurement of lower impedances requires lower operating frequencies.

f. Insertion loss. In this method, the unknown bond impedance is used as a shunt element of a "tee" attenuator. The attenuator is connected between a source and load of known impedance in which the resulting insertion loss can be related to the magnitude of the unknown bond impedance. Figure 6-23 depicts this measurement.

(1) Principle of insertion loss. The insertion loss method is based on the principle that if the shunt arm impedance of a tee attenuator is low compared to the series arm impedances, the current through the shunt arm will essentially be constant for varying values of shunt arm impedance. For a fixed imput voltage to the attenuator, changes in the output voltage are proportional to changes in the shunt arm impedance. The unknown bond impedance is then given by (assuming $R_1 > r_1 + jwL_1 + Z$, $R_2 > r_2 + jwL_2$ and a 50-ohm load resistive)--

$$Z = \frac{R_1 \ (R_2 + 50)}{50} \ \left(\frac{V_o}{V_1} \right) \qquad \text{(eq 6-10)}$$

where Z is bond impedance; R_1 and R_2 are isolation resistors; V_o is the applied drive voltage; and V_1 is output voltage.

(2) Advantage of method. A special advantage of this method is that the measurement system can be used for swept frequency measurements, as indicated in figure 6-23, at great savings in cost and time (ref 6-12).

6-14. Cited references.

6-1. Military Standard (MIL-STD) 285, Method of Attenuation Measurements for Electromagnetic Shielding Enclosures for Electric Test Purposes (U.S. Department of Defense, 25 June 1956).

6-2. Institute of Electrical and Electronic Engineers (IEEE) Standard 299, Recommended Practice for Measurement of Shielding Effectiveness of High Performance Shielding Enclosures (1969).

6-3. DNA EMP Preferred Test Procedures, DNA 32864 (Defense Nuclear Agency [DNA], February 1977).

6-4. MIL-F-15733, General Specifications for Radio Frequency Interference Filters (U.S. Department of Defense, 15 June 1982).

6-5. AFWL Sensor and Simulation Notes (SSN) Nos. 21, 52-55, 68, 90, 95, 103, 115, 118 (U.S. Air Force Weapons Laboratory).

6-6. MIL-STD-202, Test Methods for Electronic and Electrical Component Parts (U.S. Department of Defense, 21 October 1982).

6-7. NACSEM 5204, Appendix B, Specification NSA No. 65-6, National Security Agency Specification for RF Shielded Enclosures for Communications Equipment: General Specification.

6-8. Document Review, Standard Shielding Effectiveness Test Methods, Test Method 19 (U.S. Army Corps of Engineers, 31 May 1972).

6-9. Axford, R., R. McCormack, and R. Mittra, Evaluation of Applicability of CW EMI/RFI Shielding Effectiveness Test Techniques to Assessment of EMP Hardness of Tactical Shelters, Technical Report M-307 (U.S. Army Construction Engineering Research Laboratory, March 1982).

6-10. Electromagnetic Pulse (EMP) Specification Applications Handbook, AFWL Technical Report 79-162 (U.S. Air Force Weapons Laboratory, May 1980).

6-11. Electromagnetic Compatibility, Air Force Systems Command Handbook DH 1-4, DN6B1 (U.S. Air Force, January 1969).

6-12. Derny, H.W., and K.G. Beyers, A Sweep Frequency Technique for the Measurement of Bonding Impedance Over an Extended Frequency Range (EMI Symposium, 1967).

6-13. Madle, P.J., Transfer Impedance and Transfer Admittance on Gasketed Panel Assemblies; Honeycomb Air-Vent Assemblies, IEEE International Symposium on EMC (1976).

6-15. Uncited references.

BDM Corporation, DNA EMP Course Study Guide, Draft (Defense Nuclear Agency [DNA], April 1983).

Jobe, D. J., The Electromagnetic Incompatibility of EMI Filter Test Methods and Test Results, IEEE EMC Symposium Record (1968).

Table 6-1. Test applicability

	Concept exploration phase	Concept validations phase	Design development phase	Construction/ installation phase	Operation and support phase
Objective	o Evaluate design alternatives o Establish protection requirements	o Validate selected approach	o Validate selected approach/ designs	o Quality assurance o Hardness assessment and verification test o Product acceptance	o Hardness surveillance
Analysis/ test approaches	Laboratory tests: o SE/leakage o Large loop o Helmholtz coil o Parallel plate o Radiated fields o Strip line o Small loop o Radiated fields o Strip line o Cables o Triaxial o Quadraxial o Coaxial o Susceptibility o Current injection o Coupling o Scale modeling	Prototype laboratory tests: o SE/leakage o Large loop o Helmoltz coil o Parallel plate o Radiated fields o Strip line o Small loop o Radiated fields o Strip line o Cables o Triaxial o Quadraxial o Coaxial o Susceptibility o Current injection o Coupling o Scale modeling	Laboratory tests: o SE/leakage (as before) o Protection element design o Direct injection	QA/acceptance tests: o Shield fabrication o Seam sniffer o Visual inspection o Small loop o Radiated o High/low impedance o Aperture treatment o Radiated o Strip line o Penetrations o Shield tech. o Current injection o TPDs o Current injection Verification tests: o EMP large volume simulators o CW radiated o Parallel plate o Current injection	SE: o Seam sniffer o Built-in Helmholtz coils o CW illuminators o Built-in local current sources Cables: o Current injection o Built-in sense drive wires TPD: o Current injection o Ground bond tests

Table 6-2. Summary of existing bounded-wave simulators

Name*	Location	Wave-form	Polar-ization	Magnitude	Interaction volume	Status
ALECS	Kirtland AFB, NM	Exo**	V	50 kV/m	30x30x10 m	Operational
ARES	Kirtland AFB, NM	Exo	V	70 kV/m	40x30x20 m	Operational
TRESTLE	Kirtland AFB, NM	Exo	V	50 kV/m	80x80x75 m	Operational
TEFS	WSMR, NM	Exo	V,H	65 kV/m	40x40x10 m	Operational
TEFS	NSWC/WOL, MD	Exo	V,H	50 kV/m	Modular	Operational

*ALECS = AFWL/LASL Electromagnetic Calibration and Simulation Facility; ARES = Advanced Research EMP Simulator; TEFS = Transportable Electromagnetic Field Simulator.
**HEMP double exponential.

Table 6-3. Summary of radiating wave simulators

Name*	Location	Wave-form	POL**	Direct wave magnitude/distance	Interaction area (~P1. wave)	Angle of arrival	Status
RES I	Portable, Kirtland AFB, NM	Exo***	H	1000 V/m @ 500 m	100 m	Any	Deactivated
RES II	Portable, Kirtland AFB, NM	Exo	V	1000 V/m @ 500 m	100 m	Any	Deactivated
VPD	Kirtland AFB, NM	Exo	V	3 kV/m @ 200 m	Area directly below antenna (non-planar)	Grazing	Operational
HPD	Kirtland AFB, NM	Exo	H	50 kV/m @ 9 m HAC+	ditto	normal	Operational
HDL Biconic	HDL, Woodbridge, VA	Exo	H	15 kV/m @ 100 m	~200 m	10° @ 200 m	Operational
AESOP	HDL, Woodbridge, VA	Exo	H	50 kV/m @ 50 m	~200 m	10° @ 200 m	Operational
VEMPS	HDL Woodbridge, VA	Exo	V	5 kV/m @ 25 m (0.25 MV pulser)	~100 m	Grazing	Operational
EMPRESS	NSWC Solomons, MD	Exo	H	2.2 kV/m @ 300 m (16 m HAG)	~300 m	8° @ 300 m	Operational
EMPRESS	NSWC Solomons, MD	Sur-face	V	4 kV/m @ 300 m	~300 m	Grazing	Operational
EMPSAC	NSWC/NATC Patuxent, MD	Exo	H	8.5 kV/m @ 50 m	~25-50 m	17° @ 50 m	Operational
NAVES	NSWC/NATC Patuxent, MD	Exo	V	11 kV/m @ 50 m	25-50 m	Grazing	In construction
TEMPS	DNA, transport-able	Exo	H	50 kV/m @ 50 m 12.5 kV/m @ 200 m	200 m	10° @ 200 m	Operational

*RES I & II = Radiating Electromagnetic Simulators; VPD = vertically polarized dipole; HDL = Harry Diamond Laboratories; AESOP - Army Electromagnetic Simulator Operations Facility; VEMPS = Vertical Electromagnetic Simulator; EMPRESS = Electromagnetic Pulse Radiation Environment Simulator for Ships; EMPSAC = EMP Simulator for Aircraft; NAVES = Navy EM Simulator; TEMPS = transportable EMP simulator.
**POL = polarization
***Exo = HEMP double exponential.
+Directly below antenna.

Table 6-4. Scaling relationships

Model size	$D_s = \frac{D_a}{M}$
Frequency	$w_s = Mw_a$
Conductivity	$c_s = Mc_a$
Permittivity	$p_s = p_a$
Permeability	$u_s = u_a$
Propagation loss	$a_s = Ma_a$
Propagation phase	$B_s = MB_a$

Table 6-5. Summary of quality assurance test methods (source: ref 6-4)

Fixture type	Environment	Injection method	Fixture termination	Cable	Verification	Assurance	Surveillance	Maintenance	Response measurement (A)	Excitation measurement (B)	Measure of shielding effectiveness
Quadraxial (trough): Four concentric conductors with cable conductors and shield forming innermost pair. Direct current injection into No. 3. Conductor with return divided between cable shield and outer conductor.	CW	Direct, cable shield external return	Matched	Optional	X	X			Core current and/or voltage	Shield current	A/B
Triaxial: Three concentric conductors with cable conductor and shield forming innermost pair. Cable and/or connector shield are common to both inner and outer coaxial chamber. One chamber is connected to the generator, the other to the receiver. Other chamber may be driven. Receiver may be at generator end, or at opposite end.	Pulse CW	Direct, cable shield, external or internal return	Matched	Optional or short	X	X			Core current and/or voltage	Shield current	A/B
Coaxial: Two concentric conductors, formed by cable conductors and shield. Driven between shield and conductors. Measure external field (sniffer).	CW	Direct internal return	N/A	Short	X	X	X	X	External field	Core current or voltage	A/B
System Level: Environment applied to shielding system either as a radiated field or as a current density on the outer shield enclosure. Measure response at several points inside system. Additional tests are required to isolate points of entry.	Pulse CW	Direct or radiated exposure of system enclosure	N/A	Open and short			X		Core current and voltage	Shield current or field	A/B

Table 6-6. Comparison summary of shielding effectiveness test methods (source: ref 6-9)

Parameter specified in document	Test categories											
	Magnetic field				Electric field			Plane wave (ultrahigh frequency)			Plane wave (microwave)	
	IEEE 299	IEEE 299	MIL-STD -285	NSA 65-6*	IEEE 299	MIL-STD -285	NSA 65-6*	IEEE 299	MIL-STD -285	NSA 65-6*	IEEE 299	MIL-STD -285
Test frequency or frequency range	100 Hz to 200 KHz	100 Hz to 20 MHz	150 KHz to 200 KHz	1 KHz, 10 KHz, 100 KHz & 1 MHz	-	200 KHz, 1 MHz, & 18 MHz	1 KHz, 10 KHz, 100 KHz, 1 MHz & 10 MHz	300 MHz to 1 GHz	400 MHz	100 MHz, 400 MHz & 1 GHz	1.7 GHz to 12.4 GHz	-
Test Method	Large Loop	Small Loop	Loop test (low impedance magnetic field)	Loop test	-	Rod radiator test (high impedance electric field)	Monopole test (electric field)	Dipole test (ultrahigh frequency)	Dipole test (attenuation test for plane waves)	Tuned horizontal dipole test (plane wave)	Microwave test	-
Primary components tested	Shielded enclosures	Shielded enclosure plus doors, welds, and electrical & air duct filter enclosures	Shielded enclosure	Shielded enclosure	-	Shielded enclosure	Shielded enclosure	Shielded enclosure	Shielded enclosure	Shielded enclosure	Shielded enclosure	-
Secondary components tested	Doors, welds and electrical filter and air duct filter enclosures	Welds	**	**	-	**	**	Door seams, electrical and air duct filter panels, air-vent areas, panel seams, & coaxial cable fittings	**		Door seams, electrical and air duct filter panels, air-vent areas, panel seams, & coaxial cable fittings	-

*All power line filters shall be tested for voltage drop (not to exceed 1%) under full load. They must be operated under full load for ten hours before testing. The increase in temperature of the outer case during this period must not exceed 25°C above the ambient temperature of the room.

**Test method does not contain preliminary procedures for checking enclosure components for leaks which are to be repaired before conducting primary test.

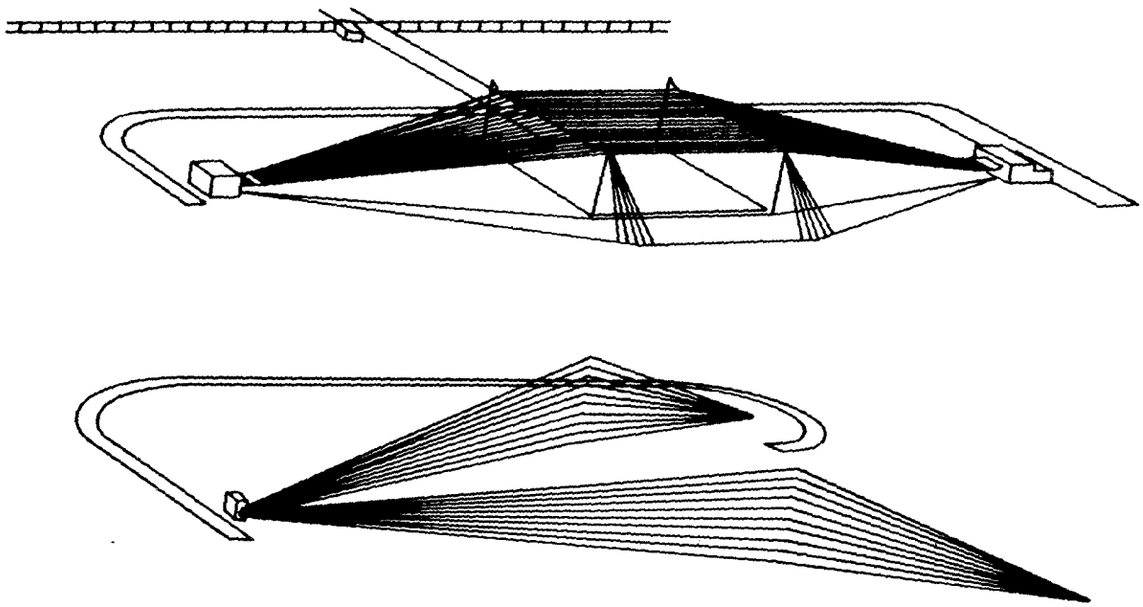

Figure 6-1. Bounded wave simulators.

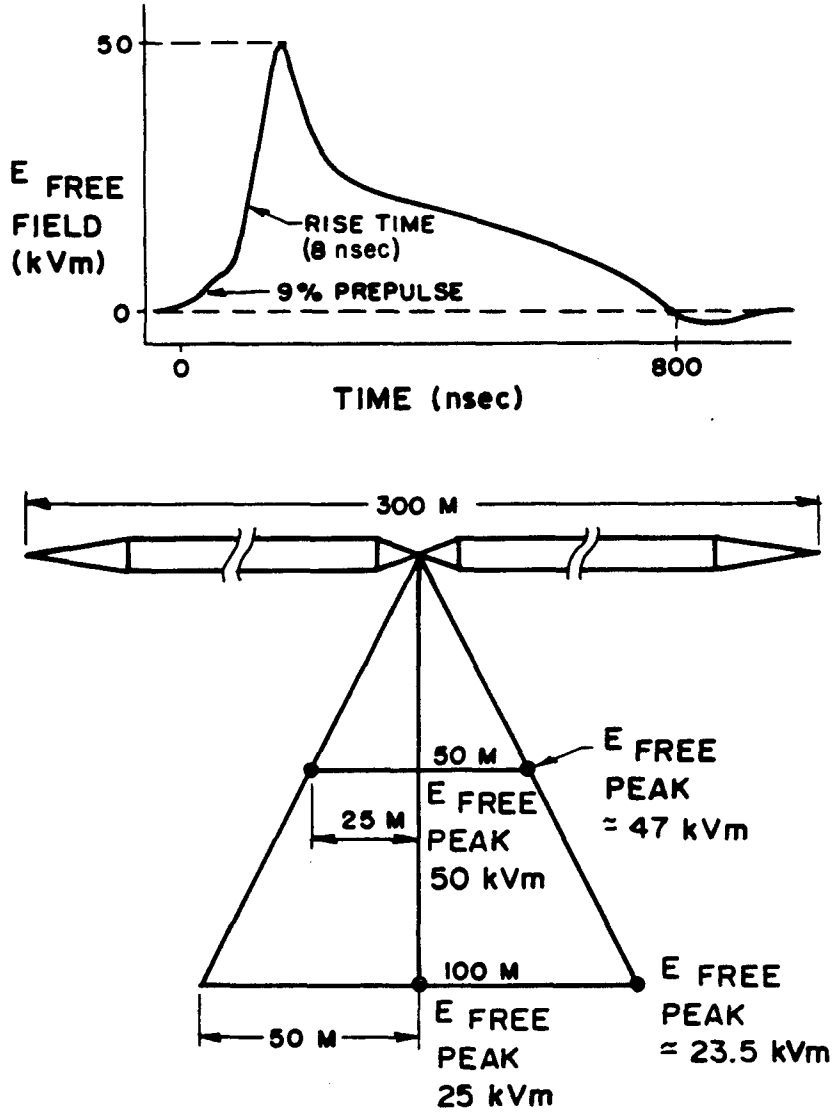

Figure 6-2. Pulsed radiated wave simulators. (sheet 1 of 2)

VEMPS CONSIST OF THE FOLLOW SUBSYSTEMS:

- 80-KV POWER SUPPLY
- 20-M-HIGH VERTICAL ANTENNA
- UNDERGROUND POWER SUPPLY
- GROUND PLANE

VEMPS ANTENNA PARAMETERS

OVERALL HEIGHT:	20 M
LOWER CONE ANGLE:	56 DEGREES
UPPER CONE ANGLE:	14 DEGREES
MAXIMUM DIAMETER:	4 M

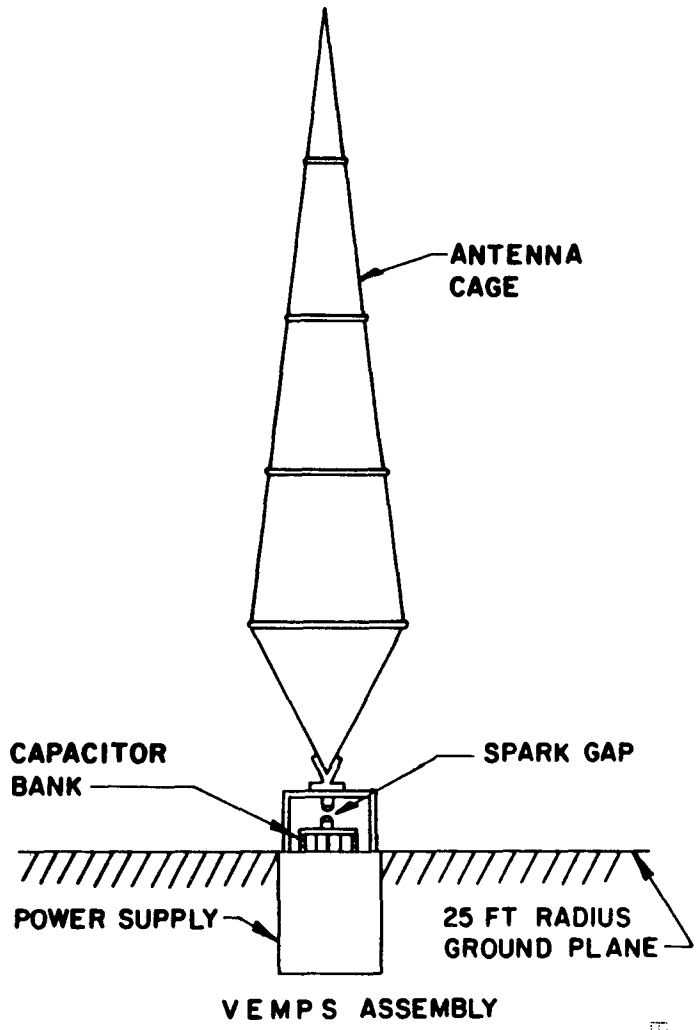

Figure 6-2. Pulsed radiated wave simulators. (sheet 2 of 2)

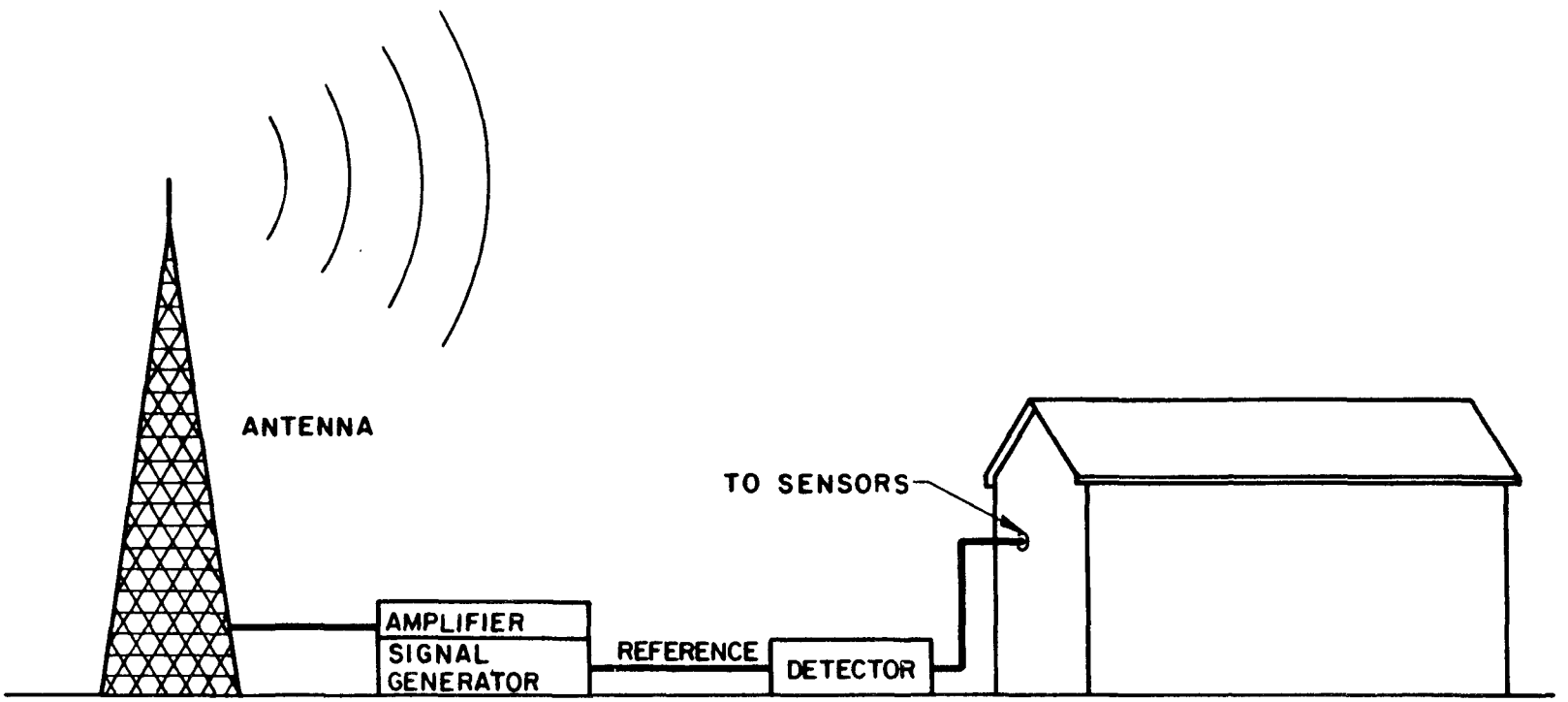

Figure 6-3. Continuous wave testing--CW test configuration.

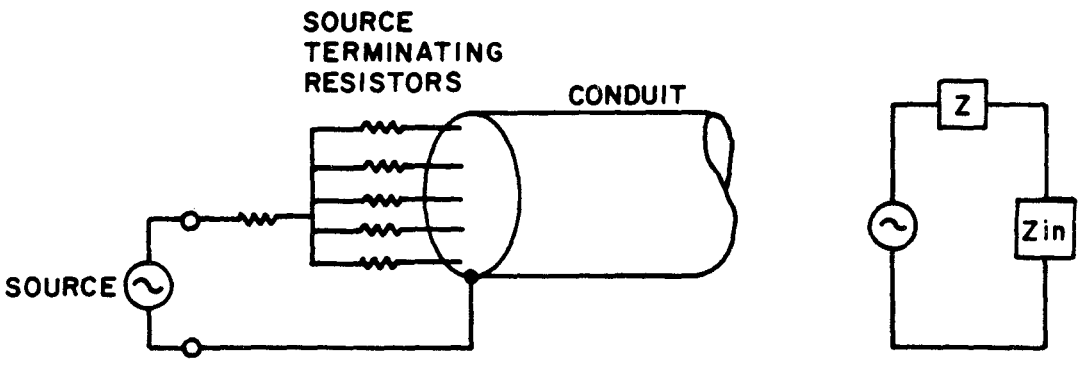

Figure 6-4. Direct current injection testing.

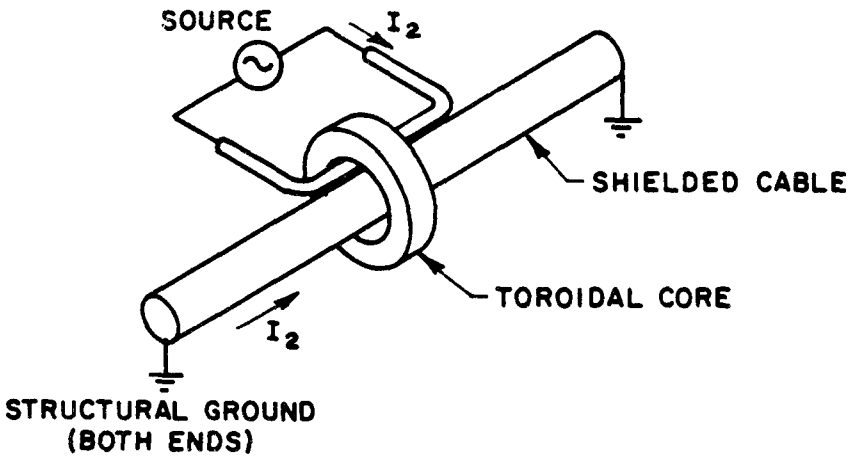

Figure 6-5. Inductive current injection testing.

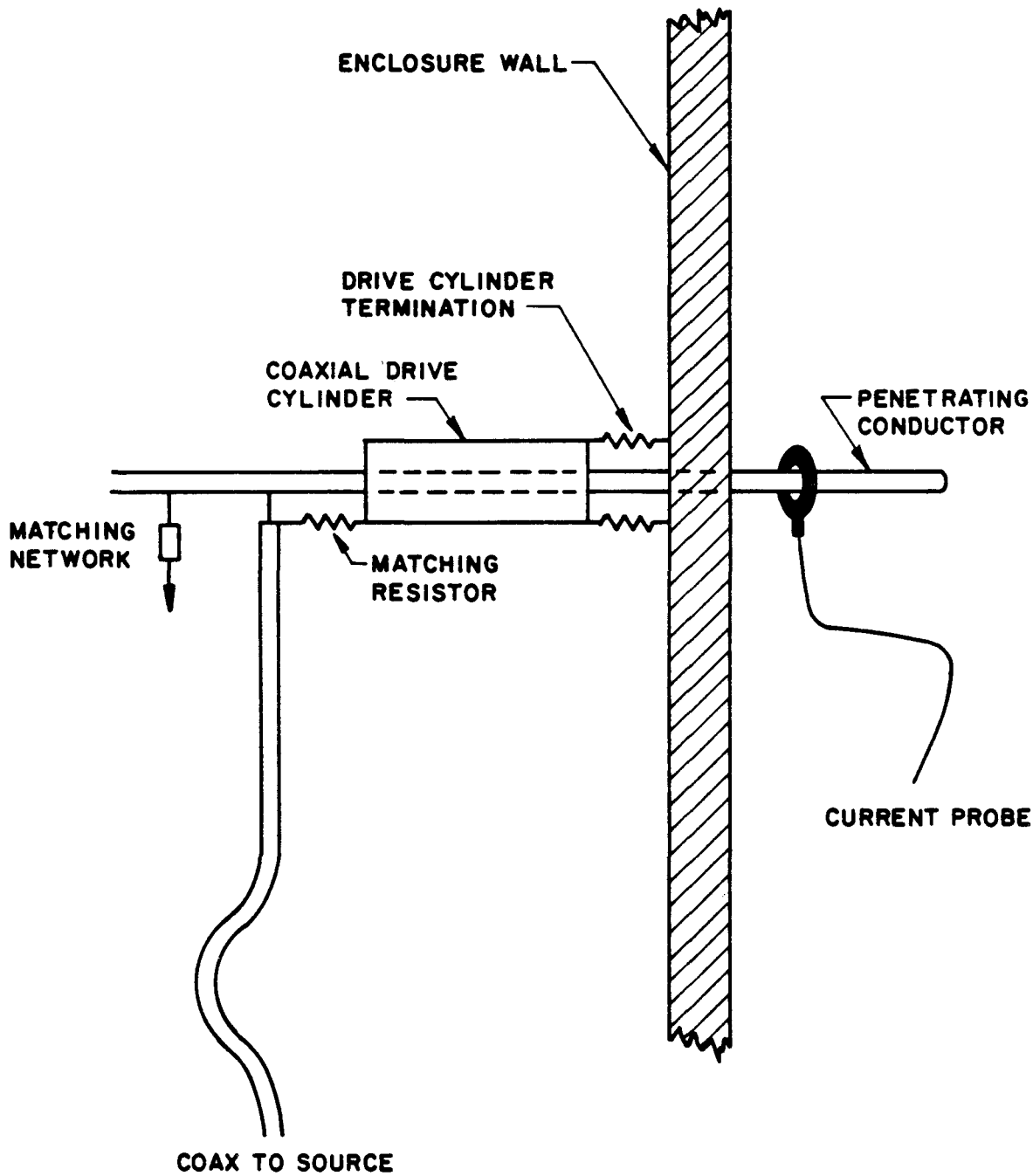

Figure 6-6. Direct drive test for penetrating conductor (conceptual sketch).

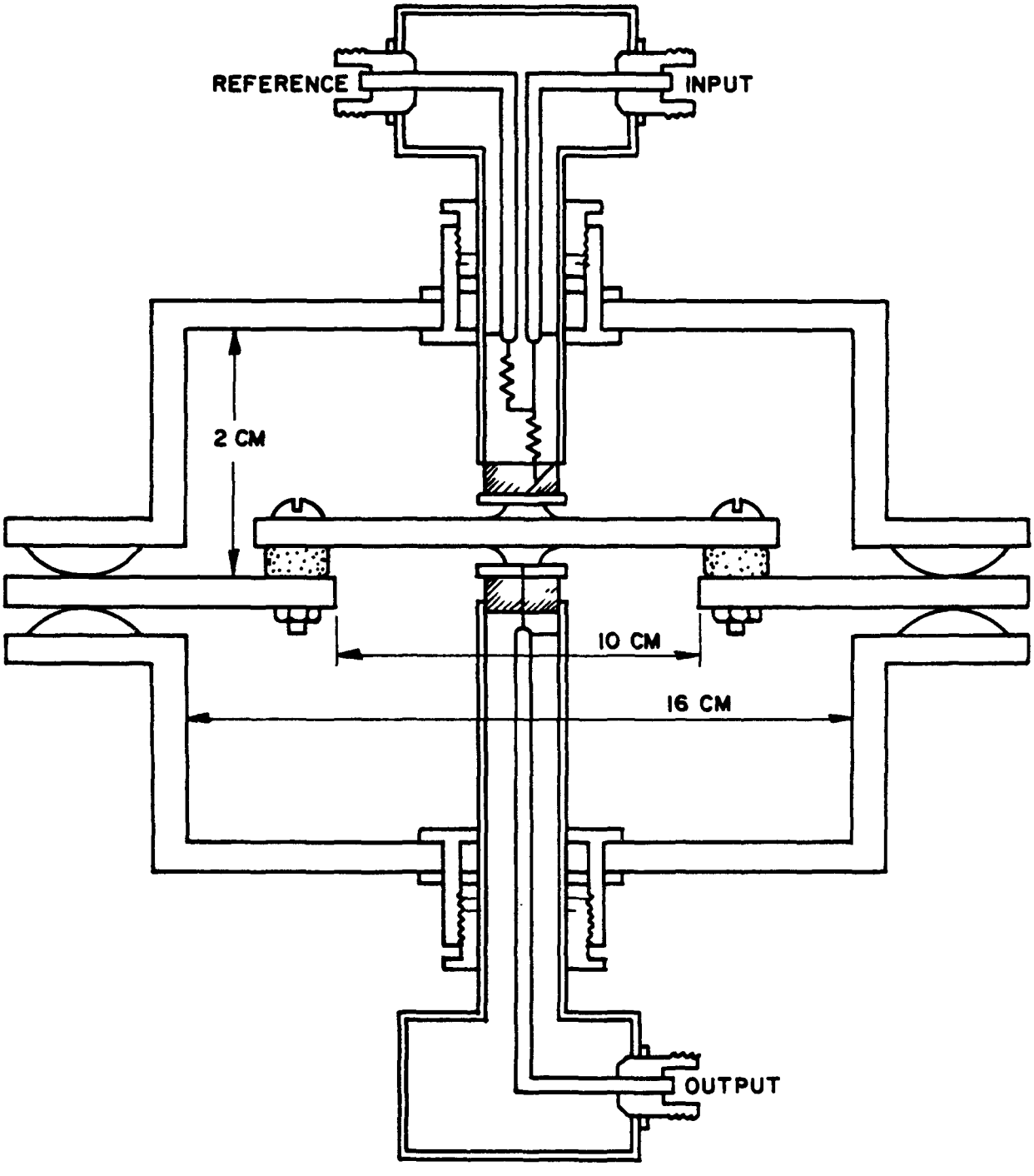

Figure 6-7. Transfer impedance/admittance test setup.

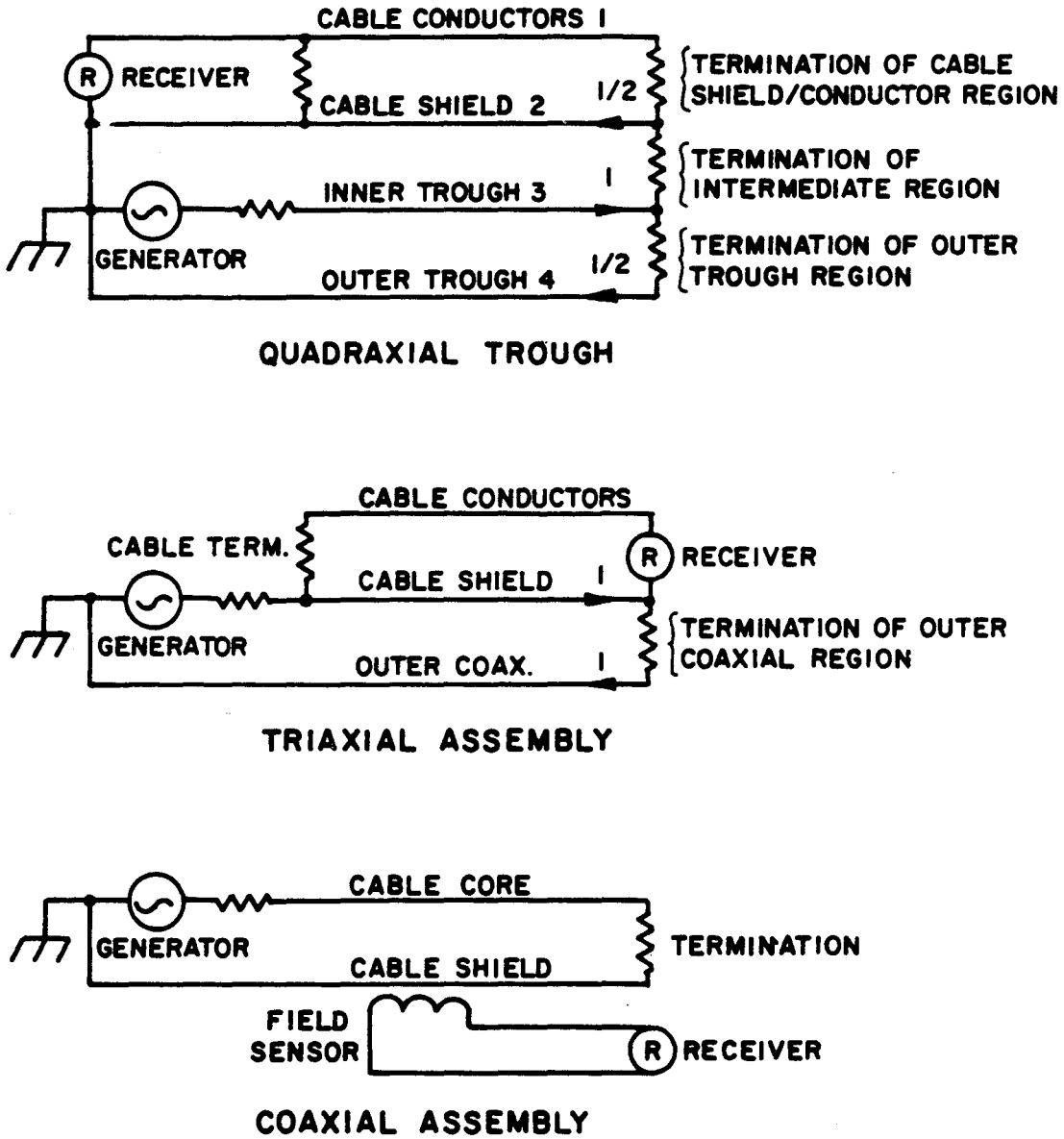

Figure 6-8. Alternative demonstration and test methods.

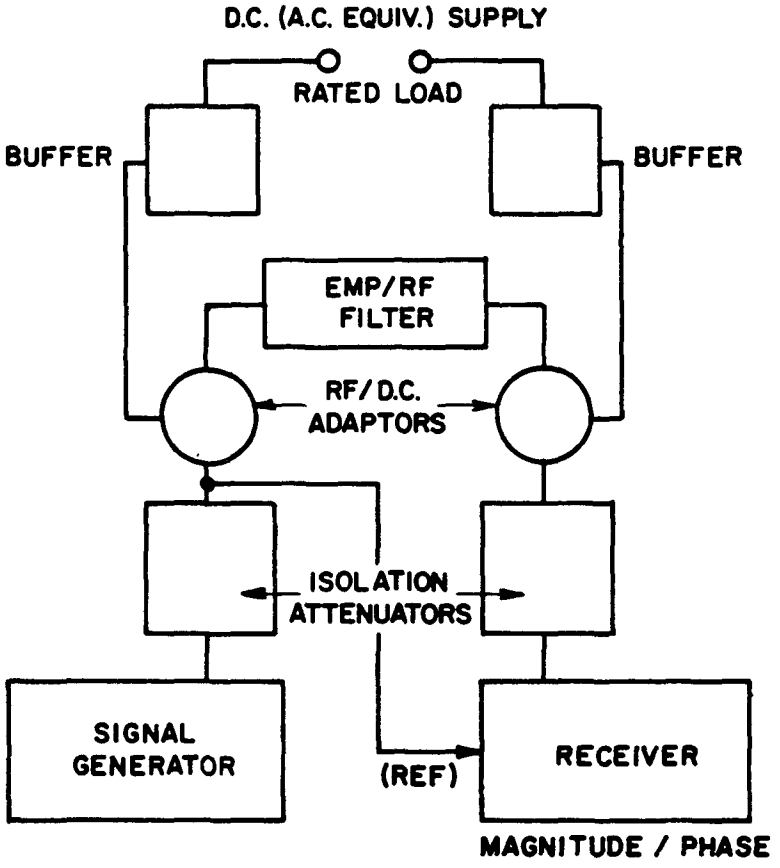

Figure 6-9. Response characteristic measurement.

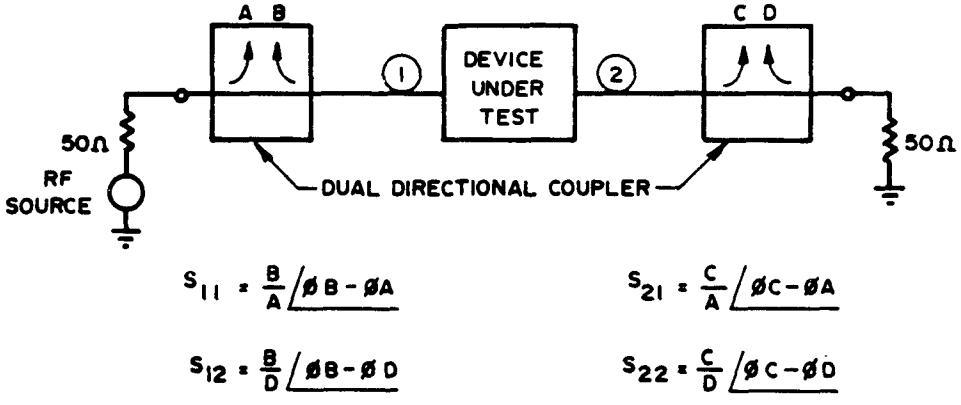

Figure 6-10. Standard circuit for measuring S parameters.

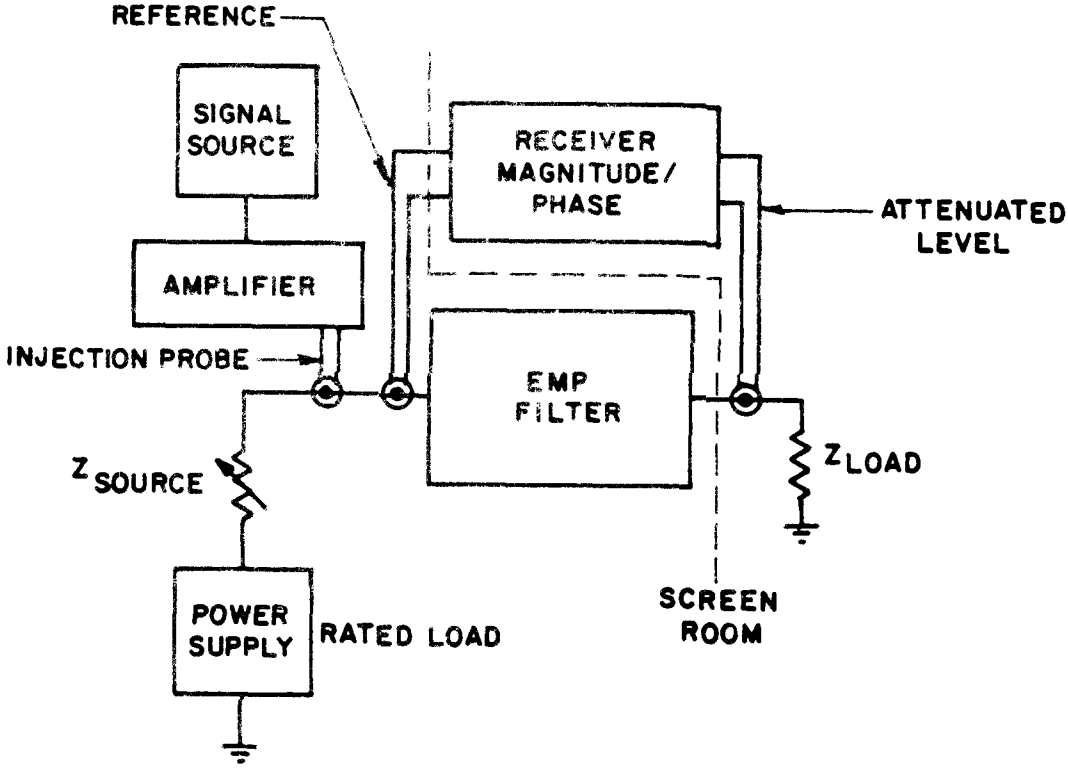

Figure 6-11. Response measurement. (Source: ref 6-4)

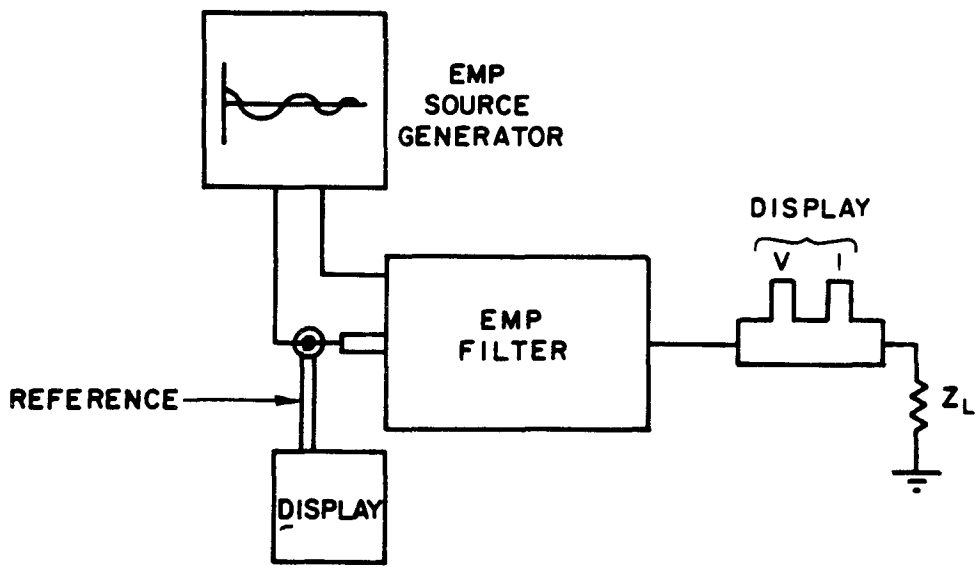

Figure 6-12. HEMP stress test. (Source: ref 6-4)

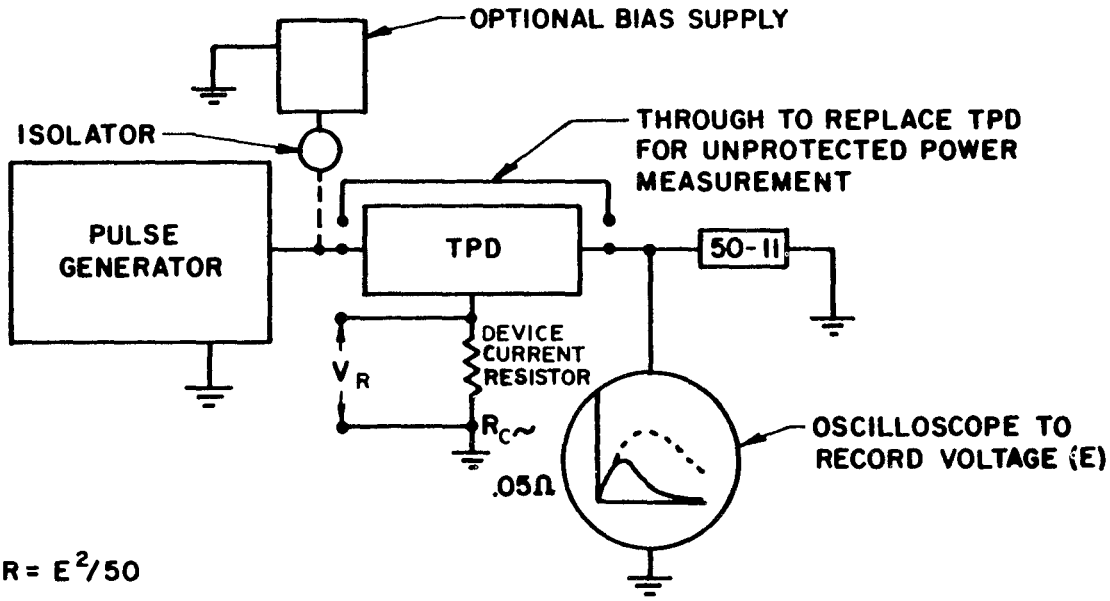

POWER = $E^2/50$

V_R USED TO DETERMINE TIME DENOTED AS t_{10} WHEN DEVICE CURRENT ≈ 10 AMPS

OPERATING IMPEDANCE = $Z_{10} - \frac{E(t_{10})}{10}$

Figure 6-13. TPD power attenuation test. (Source: ref 6-4)

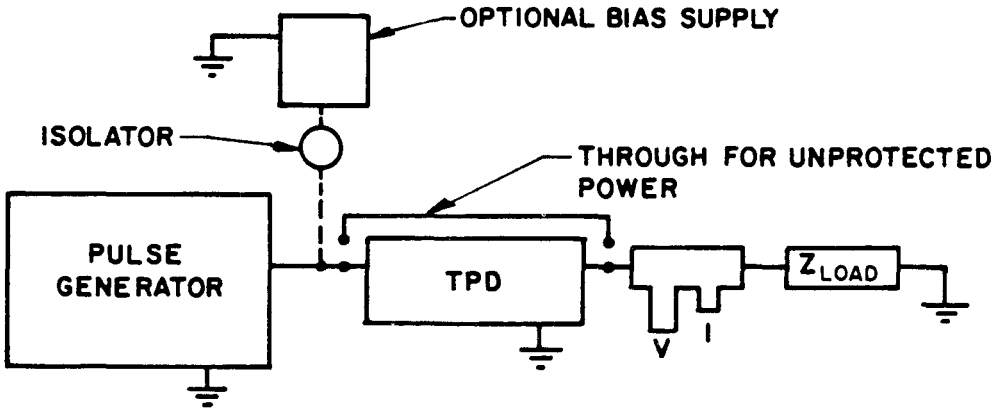

Figure 6-14. Alternative power attenuation test using simulated subsystem impedance. (Source: ref 6-4)

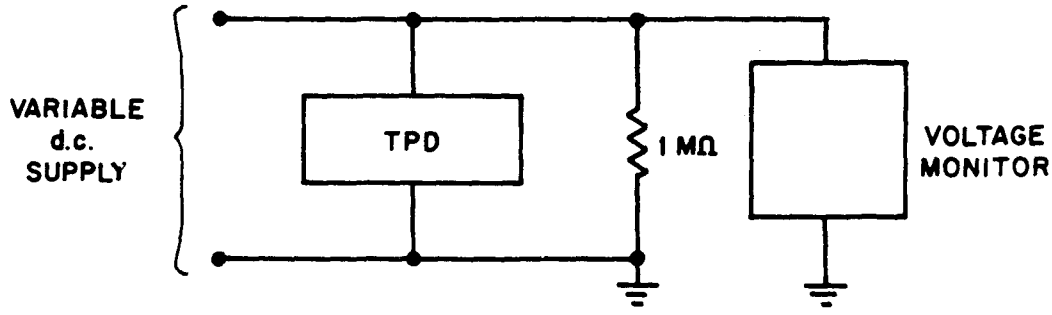

Figure 6-15. Static breakdown voltage measurement. (Source: ref 6-4)

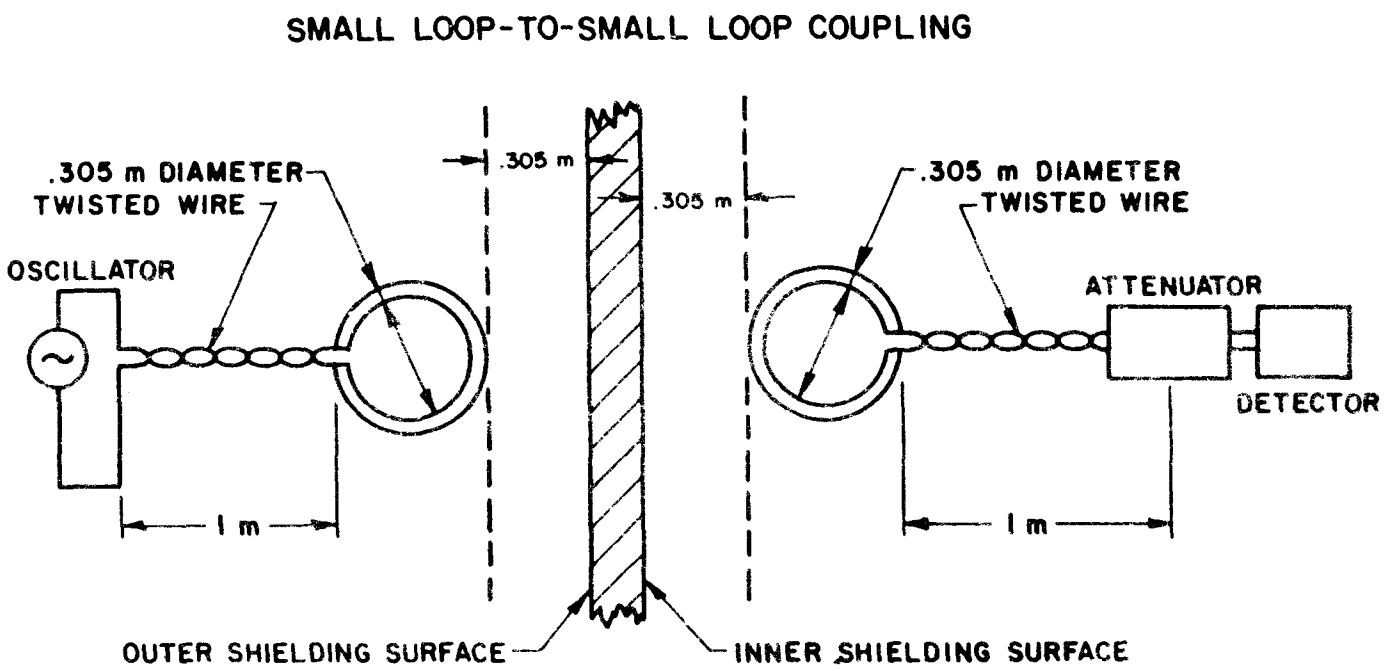

Figure 6-16. Small-loop-to-small-loop test setup. (Source: ref 6-4)

EP 1110-3-2
31 Dec 90

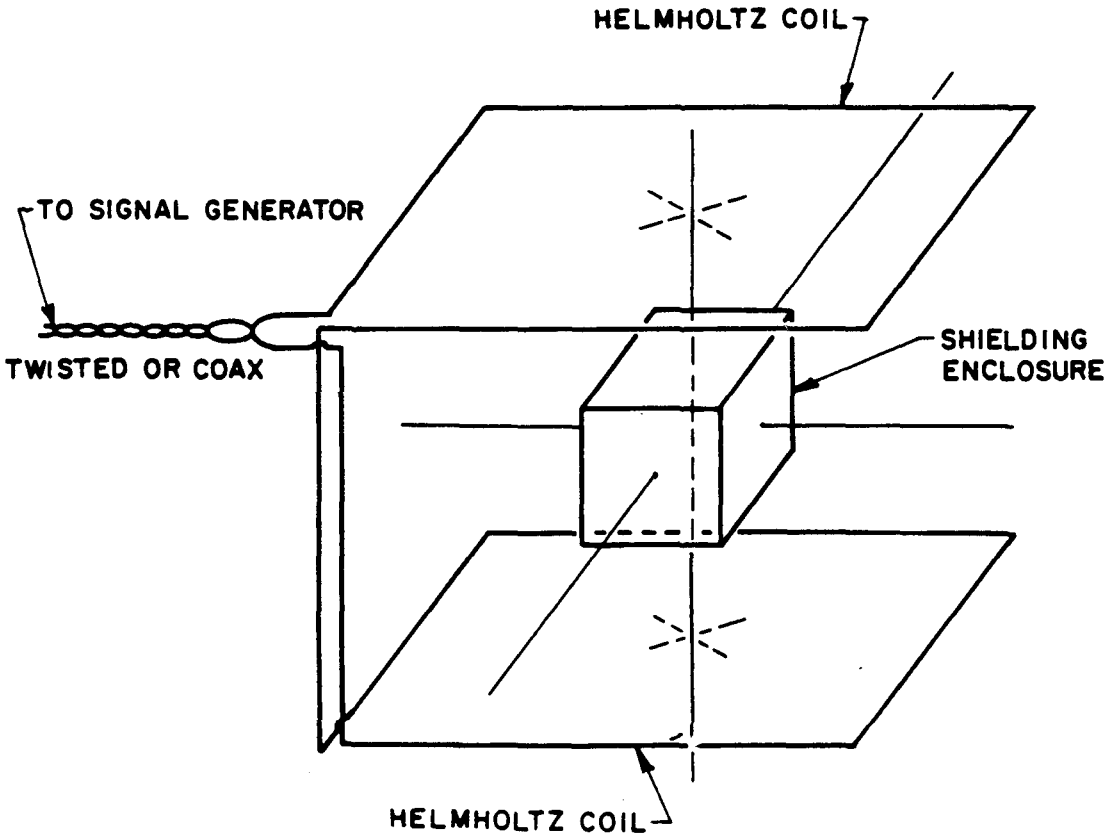

Figure 6-18. Test setup for Helmholtz coil field generation. (Source: ref 6-4)

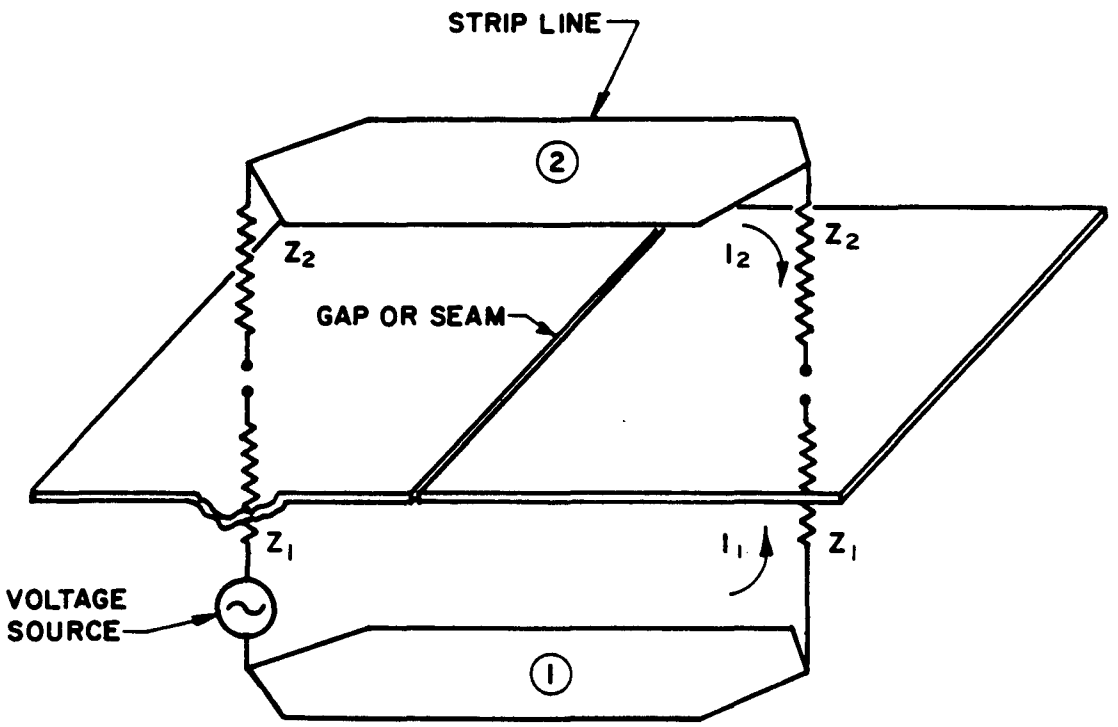

Z_1 MATCHED TERMINATIONS OF STRIPLINE 1

Z_2 MATCHED TERMINATIONS OF STRIPLINE 2

$$A = 20 \log \left| \frac{I_1}{I_2} \right|$$

Figure 6-19. Parallel strip line technique. (Source: ref 6-4)

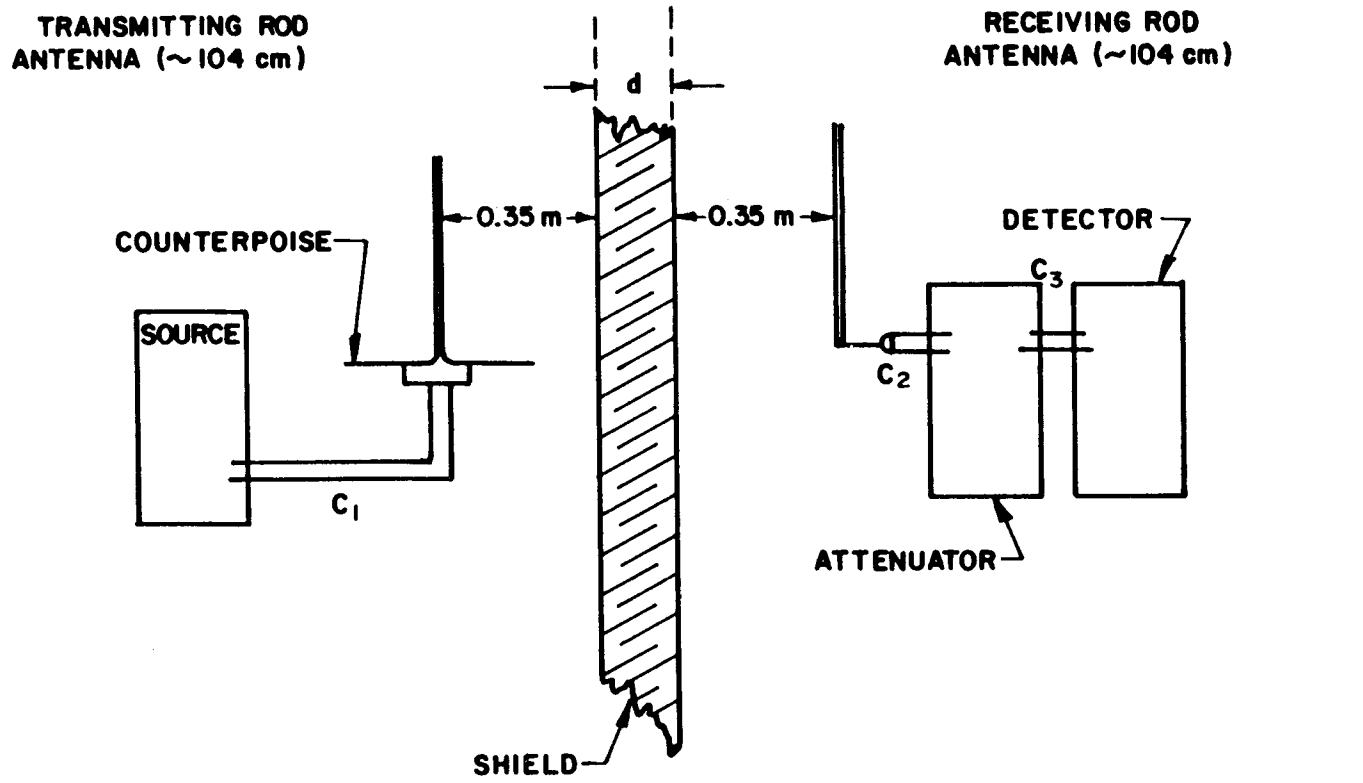

C_1, C_2, C_3 ARE SHIELDED TRANSMISSION LINE CABLES KEPT SHORT AS POSSIBLE AND USED ONLY IF NECESSARY.

d IS THE SHIELD THICKNESS.

Figure 6-20. Attenuation measurement--high-impedance electric field. (Source: ref 6-4)

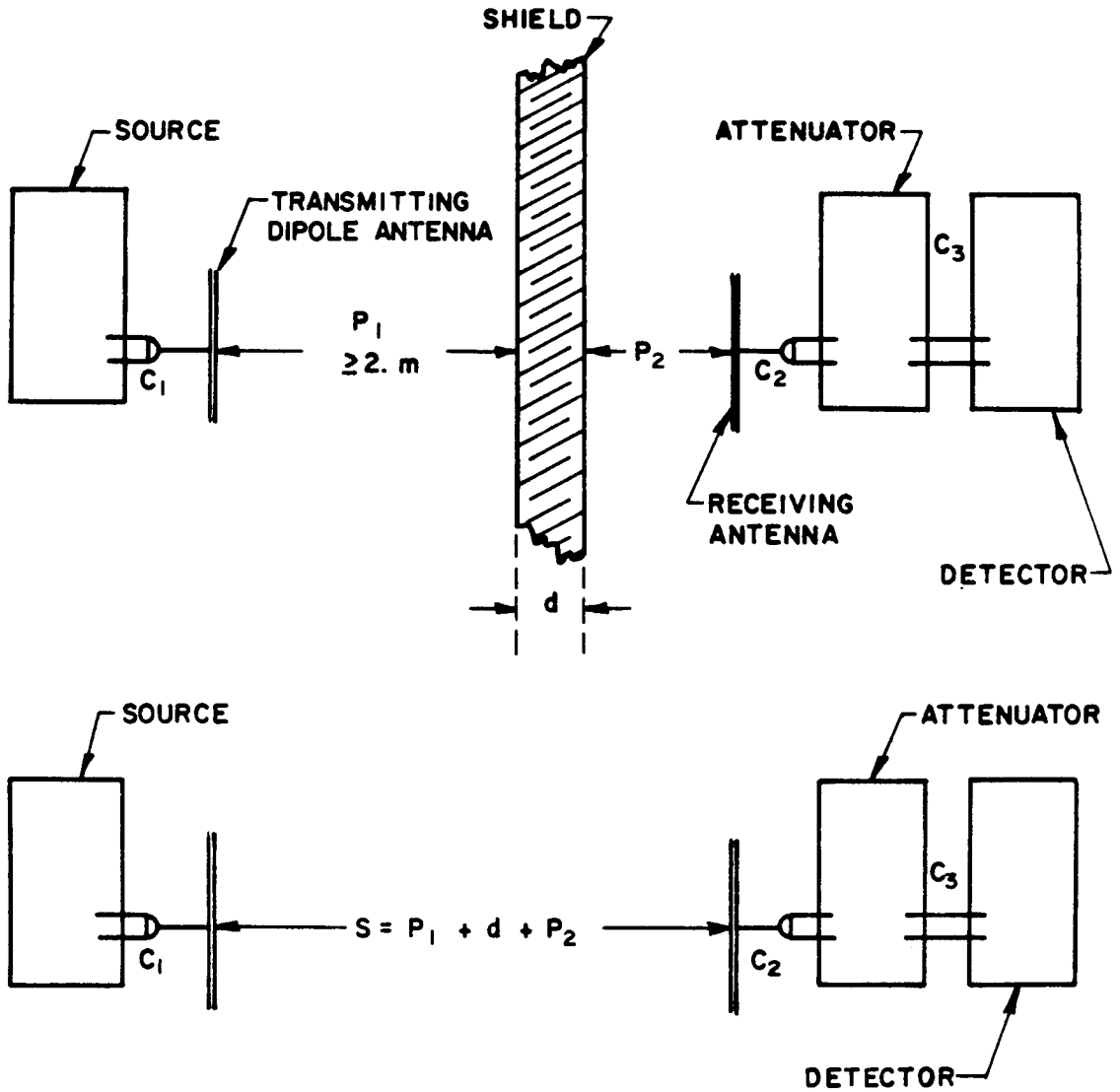

C_1, C_2, C_3 = shielded transmission line cables kept short as possible and used only if necessary.

d = shield thickness

P_1 = position of transmitting antenna (2 m minimum). This distance shall be as great as possible, limited only by the power of the source.

P_2 = receiving antenna placed such that a maximum indication of the detector is obtained (5cm minimum).

Figure 6-21. Attenuation test for plane waves (wave impedance = 377 ohms). (Source: ref 6-4)

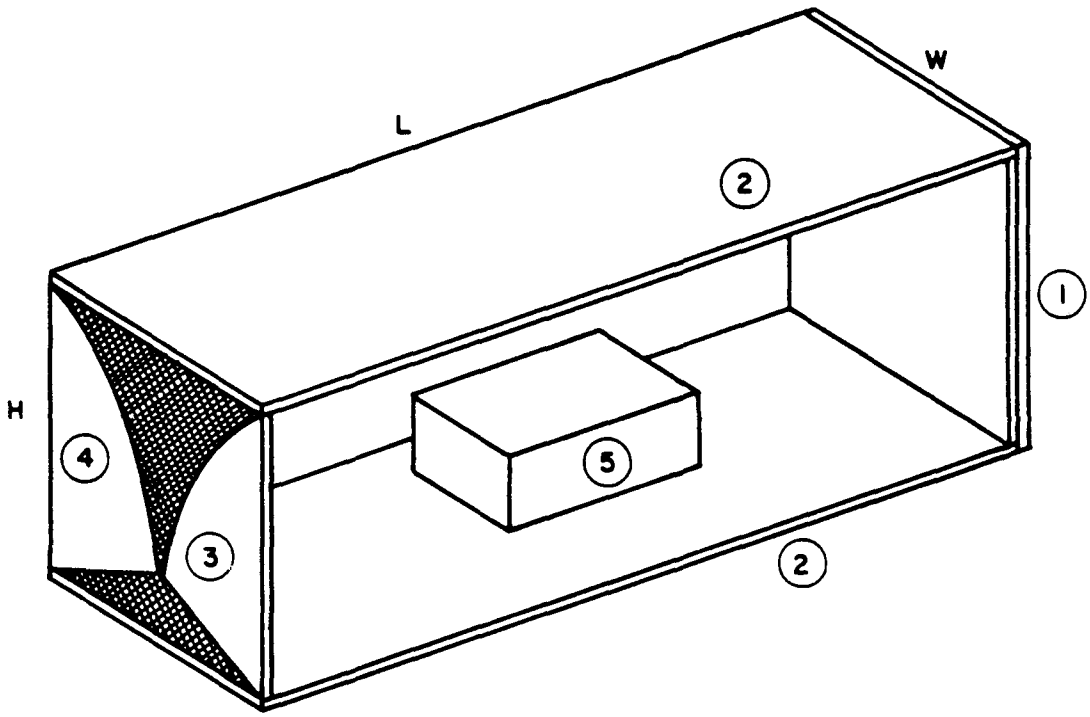

(1) Termination, separated layers of 377-ohm conductive plastic film, joined at ends and connected to conductive planes.

(2) Conductive planes, aluminum slotted longitudinally 1/2 in. o.c.

(3) Input connector, BNC or N-Type.

(4) Wave launcher, 1/16 in. copper on 1/2 in. plexiglass (~log curve).

(5) Test enclosure.

Figure 6-22. Parallel plate line. (Source: ref 6-4)

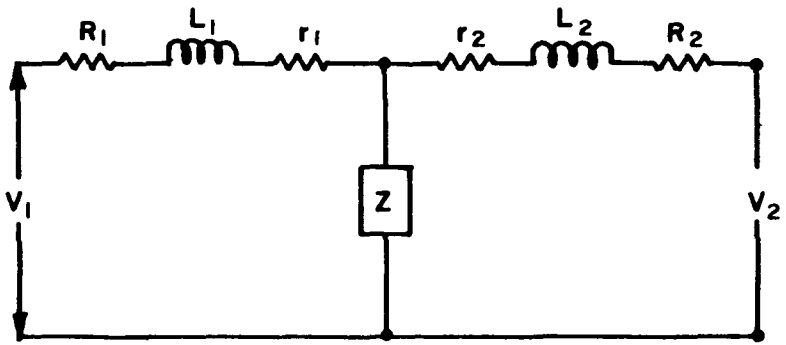

Equivalent Circuit of Measuring Device

R_1, R_2 = series isolation resistors
r_1, r_2 = connection resistances
L_1, L_2 = connection stray inductances
Z = unknown bond impedance
V_1 = input voltage
V_2 = output voltage

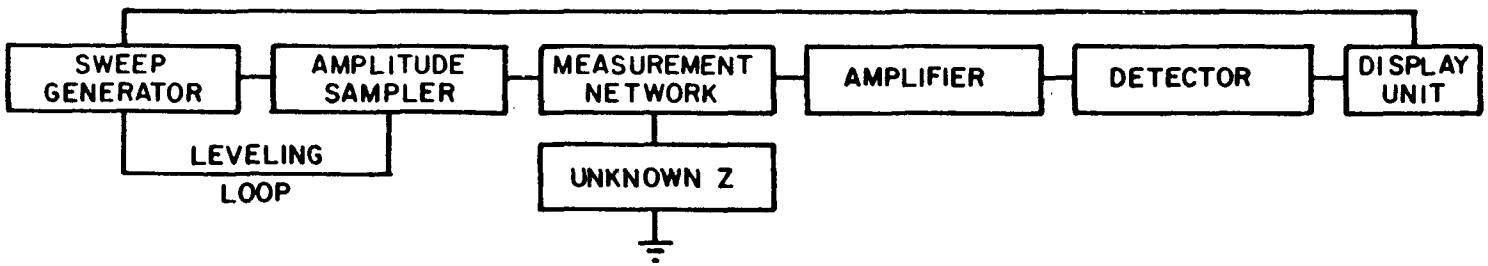

Block Diagram of Sweep Frequency Measurement System

Figure 6-23. Sweep frequency bonding measurement system. (Source: ref 6-4)