CONTENTS

I-1. Introduction..... I-1
I-2. Contour Area Methods..... I-1
I-3. Cross-sectional Area Methods..... I-3
I-4. Combination Cross section-Contour Area Method..... I-6
I-5. Accuracy of Methods..... I-6
I-6. Normal Usage..... I-6

LIST OF FIGURES

Figure I-1. Reservoir area versus elevation (from item 2, Appendix A, courtesy of The American Society of Civil Engineers)..... I-2

Figure I-2. Modified prismoidal method (from item 2, Appendix A, courtesy of The American Society of Civil Engineers)..... I-2

Figure I-3. Cross-sectional area versus distance from dam (from item 2, Appendix A, courtesy of The American Society of Civil Engineers)..... I-4

Figure I-4. Eakin's range end method (from item 2, Appendix A, courtesy of The American Society of Civil Engineers)..... I-5

APPENDIX I

RESERVOIR CAPACITY AND STORAGE DEPLETION COMPUTATIONS

I-1. Introduction. The most commonly used method for calculating volume of sediment deposits is by subtracting the resurvey capacity from the original capacity. Heinemann and Rausch [28] stated that the sediment deposits may change in average density because of compaction between successive surveys and could possible give erroneous sedimentation rates (usually in weight/time) if the differences in successive reservoir capacities is used and adjustments are not made to the density. This problem is eliminated if the average density of the deposits for the time period is known.

I-2. Contour Area Methods. The contour area methods are based upon the assumption that the area encompassed by a contour line and the contour interval can adequately represent the volume between any successive contour elevations. The smaller the contour interval the more accurate is the method. Experience has shown that 2-ft contour intervals are adequate for most volume computations. There are four contour area methods: Stage-area, modified prismoidal, average contour area, and Simpson's rule.

a. Stage-Area Method. This method requires an accurate stage-area curve. The stage-area curve is developed by planimetering the area inside a contour line and plotting it against the contour elevation as shown in Figure I-1. Reservoir volume is calculated by integrating the area between this "contour-area curve" and the y-axis as indicated by the shaded area of Figure I-1 [2].

b. Modified Prismoidal Method. This method is based upon an averaging of the areas of two successive contour lines and a geometric mean area all multiplied by the contour interval to obtain the volume between the contour elevations. Figure I-2 shows the concept for this method [2]. It is expressed mathematical as

$$V = (L / 3)*(A + SQRT(A*B) + B) \qquad \text{(I-1)}$$

where

V = Volume between two contour elevations
L = Contour interval
A = Area of lower contour
B = Area of upper contour

c. Average Contour Area Method. This method uses the averaging of two contour areas multiplied by the contour interval and is represented by the following equation. The variables are the same as in the modified prismoidal method.

$$V = (L/2)(A + B) \qquad \text{(I-2)}$$

d. Simpson's Rule. This method requires the contour interval to be constant if using contour-area data. If cross section-area data is used, the cross sections must be parallel and evenly spaced. Both require an even number of segments; therefore, if there is an odd number of segments, another

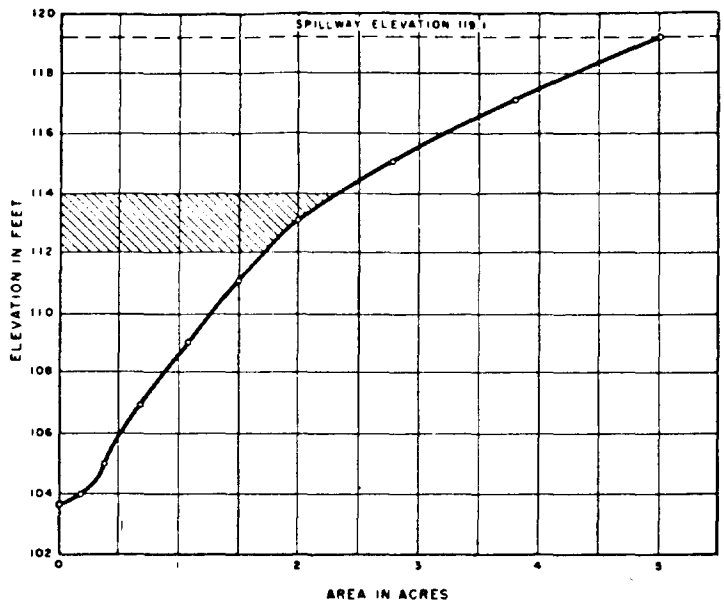

Figure I-1. Reservoir area versus elevation (from item 2, Appendix A, courtesy of The American Society of Civil Engineers)

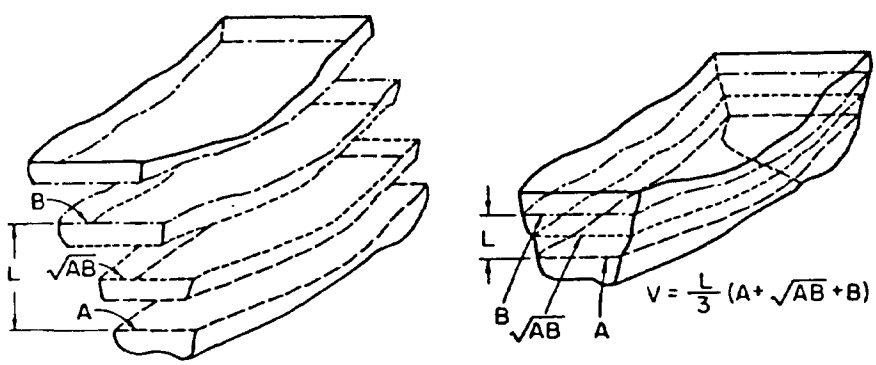

Figure I-2. Modified prismoidal method (from item 2, Appendix A, courtesy of The American Society of Civil Engineers)

method must be used for the last interval. The general equation is:

$$V = (1/3)h\ [Ao + An + 4(A1 + A3 + \ldots + An\text{-}1) + 2(A2 + A4 + \ldots An\text{-}2)] \qquad \text{(I-3)}$$

where

V = capacity in acre feet
A = area of contour or cross section in acres
h = interval spacing between contours or cross sections
n = total number of contours or cross sections

I-3. Cross-Sectional Area Methods. Cross-sectional area methods require the areas of cross sections (ranges) and distance between them which necessitates the careful selection of range location and orientation to properly represent the topography. Four basic methods use cross-sectional areas: Average end area, cross-sectional area versus distance from dam, Eakin's range end formula, and Simpson's rule. Simpson's rule using cross-sectional area has previously been described under Contour-Area Methods.

a. Average End Area Method. Use of this method involves averaging the end areas of successive ranges and multiplying by the distance between the ranges to obtain the intermediate volume. The total volume is computed by adding each intermediate volume for the entire reservoir length.

b. Cross-Sectional Area Versus Distance From Dam. A plot of cross-sectional area (ordinate) versus distance from the dam (abscissa) is first constructed in this method. A smooth curve, Figure I-3, is drawn through the plotted points and the area under the curve represents the total volume. An assumption is made that the cross sections are oriented parallel to the dam and the distance from the dam is represented by a line perpendicular to the dam and cross section [2].

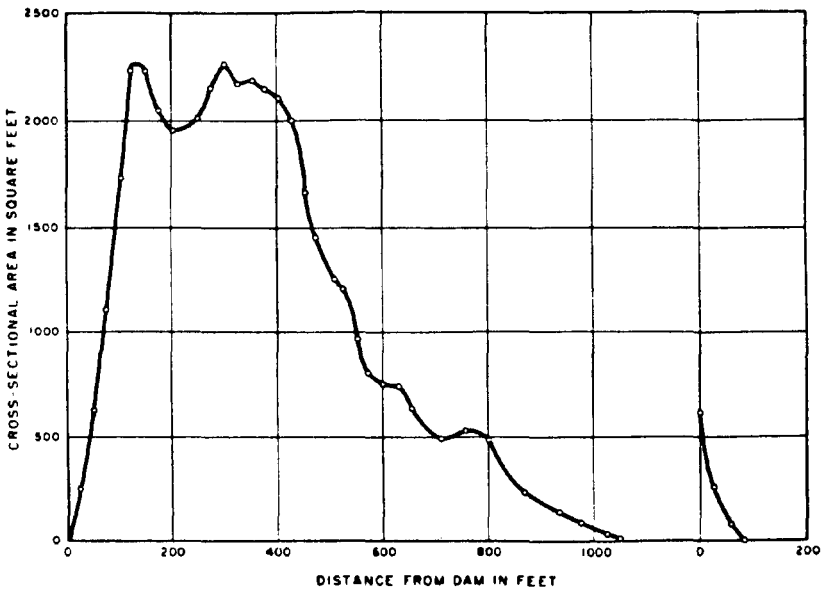

Figure I-3. Cross-sectional area versus distance from dam (from item 2, Appendix A, courtesy of The American Society of Civil Engineers)

c. Eakin's Range End Formula. Eakin's [19] method is an adaptation of the prismoidal formula and is shown in Figure I-4. The basic equation is:

$$V = (A/3)*[(E1+E2)/(W1+W2)] + (A'/3)*[(E1+E2)/(W1+W2)] + (h3*E3 + h4*E4)/3*43560] \quad \text{(I-4)}$$

where

V = capacity between ranges, in acre-feet

A = total surface area of the segment at crest contour elevation, in acres

A' = total surface area of quadrilateral (abcd) formed by the intersections of the range with the crest elevation in acres

E = range cross sectional area below crest elevation, in square feet

W = width of range at crest elevation

h = perpendicular distance from a tributary range to the junction of the tributary with the main stem or to the junction of the tributary with the downstream range, which ever is shorter, in feet. See Figure I-4.

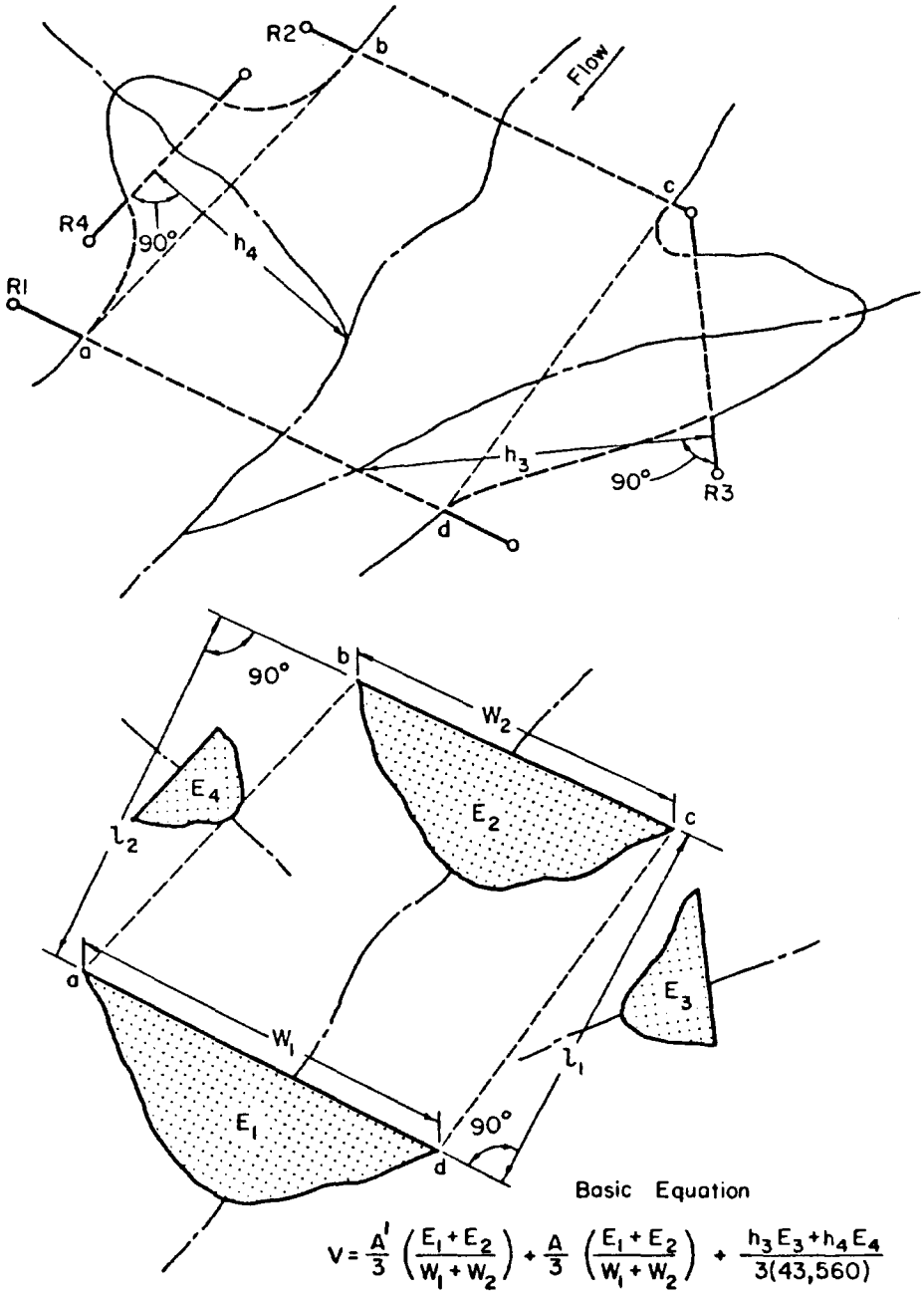

Figure I-4. Eakin's range end method (from item 2, Appendix A, courtesy of The American Society of Civil Engineers)

If the ranges are not parallel, A′ must be computed by substitution of line

segments ab and cd by 12 and 11 respectively,

where

11 = perpendicular distance from the downstream range to the upstream range at its intersection (right side looking upstream) with the crest elevation

12 = perpendicular distance from the upstream range to the downstream range at its intersection (left side looking upstream) with the dam crest elevation

d. The last term in Eakin's formula contains the contributing volume from the most downstream tributary range to the main stem and may be omitted if there are no tributaries with the ranges. The formula can be applied again from the downstream tributary range to the next upstream tributary range if there are more than one tributary range.

I-4. Combination Cross Section-Contour Area Method. Burrell [11] developed a constant factor method which uses both contour and cross-section area information to directly compute deposited sediment volumes. In his method, the volume portion between ranges and bounded by the dam crest elevation is termed a segment and that portion in the segment between contour planes is termed a subsegment. The volume of each subsegment is then defined as:

$$Vs = Vo * (As' + As") / (Ao' + Ao") \qquad \text{(I-5)}$$
$$= F * (As' + As")$$

where

F = Vo / (Ao' + Ao")
Vs = sediment deposited in a subsegment
Vo = original segment volume
Ao = original cross section area
As = sediment area of subsegment
' = upstream cross section
" = downstream cross section

I-5. Accuracy of Methods. Heinemann and Dvorak [27] determined reservoir capacity of several small reservoirs using stage-area modified prismoidal, Eakin's range formula, Simpson's Rule (range cross-sectional area method), average contour area, and cross-sectional area versus distance from dam methods. They found all these methods to be fairly accurate with the greatest deviation coming from comparisons of skewed and parallel ranges depicting the same reservoir shape. They also considered the stage-area method to be the most direct, simple, accurate and uniformly adaptable method.

I-6. Normal usage. The stage area, prismoidal, average contour area, average end area, Eakin's Range End formula and Combination cross-section contour area methods are restricted for use by the spacing or orientation of sediment ranges. Contour methods are generally used for original volume computation because of availability of contour maps or the relative ease of obtaining more accurate contour maps by aerial photometric procedures. Cross-sectional area

methods are generally used for resurveys because reservoir ranges, which are used in these methods, have previously been established.