APPENDIX F

Maintenance Scheduling for Mechanical Equipment Bureau of Reclamation FIST 4-1A January 2009

RECLAMATION
Managing Water in the West

Facilities Instructions, Standards, and Techniques
Volume 4-1A – Revised 2009

Maintenance Scheduling for Mechanical Equipment

U.S. Department of the Interior
Bureau of Reclamation
Denver, Colorado

January 2009

REPORT DOCUMENTATION PAGE

Form Approved
OMB No. 0704-0188

Public reporting burden for this collection of information is estimated to average 1 hour per response, including the time for reviewing instructions, searching existing data sources, gathering and maintaining the data needed, and completing and reviewing this collection of information. Send comments regarding this burden estimate or any other aspect of this collection of information, including suggestions for reducing this burden to Department of Defense, Washington Headquarters Services, Directorate for Information Operations and Reports (0704-0188), 1215 Jefferson Davis Highway, Suite 1204, Arlington, VA 22202-4302. Respondents should be aware that notwithstanding any other provision of law, no person shall be subject to any penalty for failing to comply with a collection of information if it does not display a currently valid OMB control number. **PLEASE DO NOT RETURN YOUR FORM TO THE ABOVE ADDRESS.**

1. REPORT DATE *(DD-MM-YYYY)*
September 2007

2. REPORT TYPE
Final

3. DATES COVERED *(From - To)*

4. TITLE AND SUBTITLE
FIST 4-1A, Maintenance Scheduling for Mechanical Equipment

5a. CONTRACT NUMBER

5b. GRANT NUMBER

5c. PROGRAM ELEMENT NUMBER

6. AUTHOR(S)
Bureau of Reclamation
Hydroelectric Research and Technical Services Group
Denver, Colorado

5d. PROJECT NUMBER

5e. TASK NUMBER

5f. WORK UNIT NUMBER

7. PERFORMING ORGANIZATION NAME(S) AND ADDRESS(ES)
Hydroelectric Research and Technical Services Group
Bureau of Reclamation
Denver Federal Center
P.O. Box 25007
Denver CO 80225-0007

8. PERFORMING ORGANIZATION REPORT NUMBER
FIST 4-1A

9. SPONSORING / MONITORING AGENCY NAME(S) AND ADDRESS(ES)
Power Resources Office
Office of Policy
Bureau of Reclamation
Mail Code 84-54000
PO Box 25007
Denver CO 80225-0007

10. SPONSOR/MONITOR'S ACRONYM(S)
DIBR

11. SPONSOR/MONITOR'S REPORT NUMBER(S)

12. DISTRIBUTION / AVAILABILITY STATEMENT
Available from the National Technical Information Service, Operations Division,
5285 Port Royal Road, Springfield, Virginia 22161

13. SUPPLEMENTARY NOTES

14. ABSTRACT
This document establishes minimum recommended practices for maintenance of mechanical equipment in Bureau of Reclamation hydroelectric power and large pumping plants. Included in this document are recommended maintenance activities, maintenance interval, and references.

15. SUBJECT TERMS
Mechanical equipment, hydraulic turbines, pumps, bearings, shaft couplings, oil and lubricants, cranes, hoists, rigging equipment, elevators, ropes, chains, slings, cathodic protection, fire systems, powerplant heating and ventilating systems, mechanical drawings, engine generators

16. SECURITY CLASSIFICATION OF:

a. REPORT	b. ABSTRACT	c. THIS PAGE
UL	UL	UL

17. LIMITATION OF ABSTRACT
UL

18. NUMBER OF PAGES

19a. NAME OF RESPONSIBLE PERSON
Roger Cline, John Germann,
Bill McStraw

19b. TELEPHONE NUMBER *(include area code)*
303-445-2293

Standard Form 298 (Rev. 8/98)
Prescribed by ANSI Std. 239-18

Facilities, Instructions, Standards, and Techniques
Volume 4-1a – Revised 2009

Maintenance Scheduling for Mechanical Equipment

Hydroelectric Research and Technical Services Group

U.S. Department of the Interior
Bureau of Reclamation
Denver, Colorado

January 2009

Disclaimer

This written material consists of general information for internal use only by Bureau of Reclamation operations and maintenance staff. Information contained in this document regarding commercial products or firms may not be used for advertising or promotional purposes and is not to be construed as an endorsement or deprecation of any product or firm by the Bureau of Reclamation.

Acronyms and Abbreviations

A	amps
ac	alternating current
ANSI	American National Standards Institute
ASME	American Society of Mechanical Engineers
ASTM	American Society for Testing and Materials
AWG	American Wire Gauge
CAL/OSHA	California Occupational Safety and Health Regulations
CBM	condition-based maintenance
CFR	Code of Federal Regulations
CMMS	computerized maintenance management system
CO_2	carbon dioxide
dc	direct current
EPSS	emergency power supply systems
FIST	Facilities Instructions, Standards, and Techniques
HECP	Hazardous Energy Control Program
Hz	hertz
JHA	job hazard analysis
MAWP	maximum allowable working pressure
mV	millivolts
NDE	nondestructive examination
NDT	Nondestructive Testing
NFPA	National Fire Protection Association
O&M	operation and maintenance
OSHA	Occupational Safety and Health Administration
PEB	Power Equipment Bulletins
PO&M	power operation and maintenance
PM	preventive maintenance
PMG	permanent magnet generator
psi	pounds per square
pvc	polyvinyl chloride
RCM	reliability-centered maintenance
Reclamation	Bureau of Reclamation
rpm	rotations per minute
rms	root mean square
RSHS	*Reclamation Safety and Health Standards*
SSG	speed signal generator
SWL	safe working load
UNC	unified coarse thread
V	volt
WECC	Western Electricity Coordinating Council
WISHA	Washington Industrial Safety and Health Administration
°F	degree Fahrenheit

THIS PAGE INTENTIONALLY LEFT BLANK

Table of Contents

	Page
Acronyms and Abbreviations	iii
1. Introduction	1
1.1 Maintenance	1
1.1.1 General	1
1.1.2 Preventive Maintenance	1
1.1.3 Reliability-Centered Maintenance	2
1.1.4 Condition-Based Maintenance	3
1.1.5 Combination of Condition-Based and Preventive Maintenance	3
1.2 Standards and References	4
1.2.1 Reclamation Standards	4
1.2.2 Recommended Standards and References	5
1.3 Maintenance and Test Procedures	5
1.3.1 General	5
1.4 Maintenance Schedules and Documentation	6
1.5 Job Plan Templates	6
1.6 Power O&M Forms	6
1.7 Power O&M Reviews	7
1.8 Limitations	7
1.9 Safety During Maintenance	7
2. Turbine and Pump Maintenance	9
2.1 Hydraulic Turbines	9
2.2 Pumps	9
2.2.1 Dynamic Pumps	9
2.2.2 Positive Displacement Pumps	13
2.3 Cavitation Erosion, Abrasive Erosion, and Corrosion	17
2.4 Wearing Rings	20
2.5 Packing/Mechanical Seals	20
2.5.1 Packing	20
2.5.2 Mechanical Seals	22
2.6 Bearings	22
2.6.1 Fluid Film Bearings	22
2.6.2 Antifriction Bearings	23
2.7 Shaft Couplings	23
2.8 Shaft Alignment	24
2.8.1 Horizontal Pump Alignment	24
2.8.2 Face and Rim Alignment Method	27
2.8.3 Reverse Indicator Method	32
2.9 Vibration Monitoring and Analysis	36
2.9.1 Proximity Probe Systems	36
2.9.2 Accelerometer Systems	37
2.9.3 Signature Analysis	37
2.10 Oil and Lubricants	39

Contents (continued)

Page

2.10.2 Oil Lubrication 39
2.10.3 Grease Lubrication 39
2.10.4 Hydraulic Oil 40
2.10.5 Testing and Filtering 40
2.11 Inspection Checklist 42
2.11.1 Hydraulic Turbines and Large Pumps 43
2.11.2 Auxiliary Pumps 48

3. Penstocks, Outlet Pipes, Piping, Gates, and Valves 51
3.1 Penstocks, Outlet Pipes, Lines, and Piping 51
3.2 Gates and Valves 51
3.2.1 General 51
3.2.2 Gates 55
3.2.3 Valves 65
3.2.4 Valve and Gate Operators 65
3.3 Guard Gate and Valve Closure Tests 74
3.4 Turbine Pressure Relief Valves 80
3.5 Auxiliary Piping Systems 80
3.6 Inspection Checklist 81
3.6.1 Gates and Valves 81
3.6.2 Penstocks, Outlet Pipes 83
3.6.3 Gates and Valves 84
3.6.4 Gate and Valve Operators and Hoists 86
3.6.5 Guard Gate and Valve Closure Tests 88
3.6.6 Turbine Pressure Relief Valves Operational Tests 88
3.6.7 Auxiliary Piping Systems 89

4. Mechanical Governors 91
4.1 General 91
4.2 Inspection Checklist 91

5. Air Compressors 99
5.1 General 99
5.2 Reciprocating Air Compressors 99
5.3 Rotary Screw Air Compressors 99
5.4 Accessories 100
5.4.1 Inlet Filters 100
5.4.2 Aftercoolers 100
5.4.3 Separators 100
5.4.4 Traps 100
5.4.5 Dryers 101
5.4.6 Pressure Regulating Valves 101
5.4.7 Pressure Relief Valves 101
5.4.8 Receiver Tanks and Other Pressure Vessels 101
5.5 Inspection Checklist 102

Contents (continued)

Page

5.6 General 103
5.7 Reciprocating Compressors 105
5.8 Rotary Screw Compressors 106

6. Cranes, Hoists, Rigging Equipment, and Elevators 107
6.1 General 107
6.2 Standards and References 107
6.2.1 Reclamation Standards 107
6.2.2 OSHA Regulations 107
6.2.3 ANSI/ASME Standards 108
6.3 New Versus Existing Cranes 109
6.4 Crane Types 109
6.5 Inspections 109
6.6 Maintenance 119
6.7 Testing 121
6.7.1 Operational Tests 121
6.7.2 Periodic Load Tests 122
6.8 Safe Operating Practices 123
6.9 Critical Lifts 125
6.9.1 Determination of Critical Lift 125
6.9.2 Responsibility 126
6.9.3 Designated Person 126
6.9.4 Critical Lift Plans 126
6.9.5 Critical Lift Plan Approval 127
6.9.6 Prelift Meeting 128
6.9.7 Documentation 128
6.10 Overhead and Gantry Cranes 128
6.10.1 General 128
6.10.2 Modifications 128
6.10.3 Rated Load Marking 129
6.10.4 Hand Signal Posting 129
6.10.5 Outdoor Cranes 129
6.10.6 General Construction 129
6.10.7 Maintenance and Inspection Requirements 129
6.11 Ropes, Slings, Chains, and Rigging Hardware 143
6.11.1 General Maintenance and Inspection Requirements 143
6.11.2 Inspections 144
6.11.3 Operating Practices 145
6.11.4 Alloy Steel Chain Slings 146
6.11.5 Wire Rope Slings 148
6.11.6 Metal Mesh Slings 151
6.11.7 Natural and Synthetic Fiber Rope Slings 151
6.11.8 Synthetic Webbing Slings 152
6.11.9 Rigging Hardware (Shackles, Eyebolts, etc.) 155

Contents (continued)

Page

6.12 Shop Fabricated Lifting Devices and Rigging Hardware 172
6.13 Below-the-Hook Lifting Devices 172
6.13.1 Design 173
6.13.2 Marking 173
6.13.3 Modifications 174
6.13.4 Operations 174
6.13.5 Inspections 174
6.13.6 Repairs 175
6.13.7 Testing 176
6.13.8 Maintenance Files 176
6.14 Elevators 177

7. Cathodic Protection 179
7.1 General 179
7.2 What Is Corrosion 179
7.3 What Is Cathodic Protection 180
7.4 Cathodically Protected Metalwork at Powerplants 181
7.5 Typical Operation and Maintenance Requirements 182
7.5.1 Operating Criteria 182
7.5.2 Submerged Metalwork Cathodic Protection Systems 183
7.5.3 Buried Metalwork Cathodic Protection Systems 185
7.6 Data Analysis and Technical Assistance 185
7.7 Definitions and Procedures 186
7.7.1 Definitions 186
7.7.2 Procedures 188
7.8 Inspection Checklist 191

8. Fire Systems 193
8.1 General 193
8.2 Carbon Dioxide Fire Suppression Systems 194
8.3 Fire Suppression Systems for Transformers 194
8.4 Fire Suppression Systems for Paint and Oil Storage and Transfer Rooms 195
8.5 Clean Agent Fire Extinguishing System 195
8.6 Life Safety Code 195
8.7 References and Standards 196
8.8 Inspection, Testing, and Maintenance of Sprinkler Systems 197
8.8.1 Sprinklers 198
8.8.2 Pipe and Fittings 198
8.8.3 Gauges 198
8.8.4 Alarm Devices 199
8.8.5 Buildings 199
8.9 Inspection, Testing, and Maintenance of Fire Pumps 199
8.10 Inspection, Testing, and Maintenance of Water Spray, Fixed Systems 200

Contents (continued)

Page

8.11 Inspection, Testing, and Maintenance of Private Hydrants and Fire Service Mains 201
8.12 Inspection, Testing, and Maintenance of Standpipe and Hose Systems 202
8.13 Inspection, Testing, and Maintenance of Carbon Dioxide Systems 204
8.14 Inspection, Testing, and Maintenance of Clean Agent Fire Extinguishing 205
8.15 Inspection, Testing, and Maintenance of Fire System Valves and Components 206

9. Powerplant Heating and Ventilating Systems 209
9.1 Introduction 209
9.2 Inspection Checklist 209

10. Mechanical Drawings 211
10.1 General 211
10.2 Maintenance Schedule for Mechanical Drawings 211

11. Engine Generators 213
11.1 General 213
11.2 Maintenance Schedule for Engine Generators 213

Figures

Figure Number *Page*

1 Francis turbine 10
2 Kaplan turbine 11
3 Vertical volute pump 14
4 Two-stage vertical turbine pump 15
5 Double suction horizontal volute pump and parts list 16
6 Positive displacement pumps 18
7 Checking indicator bar for sag 26
8 Face and rim alignment method 27
9 Face and rim alignment worksheet 28
10 Face and rim alignment worksheet example 29
11 Reverse indicator alignment worksheet 33
12 Reverse indicator alignment worksheet (example) 34
13 Reverse indicator alignment plot 35
14 Single spectrum plot 38
15 Common gate and valve arrangements 52
16 Intake arrangements 53
17 Intake arrangements 54

Figures (continued)

Figure Number *Page*

18 Radial gates 56
19 Slide gate 57
20 Roller-mounted gate (coaster gate) 59
21 Wheel-mounted gate (fixed wheel gate) 60
22 Jet flow gate 61
23 Ring-follower gate 62
24 Ring seal gate (hydraulically operated) 63
25 Ring seal gate (mechanically operated) 64
26 Bulkhead gate 66
27 Stop logs 67
28 Tube valve 68
29 Hollow jet valve (mechanically operated) 69
30 Hollow jet valve (hydraulically operated) 70
31 Butterfly valve 71
32 Rising stem gate hoist 72
33 Twin threaded stem gate hoist (nonrising stem) 73
34 Chain and sprocket hoist 75
35 Wire rope hoist 76
36 Typical hydraulic hoist system 77
37 Typical hydraulic hoist system (gravity closing gate) 78
38 Typical hydraulic hoist system (hydraulic cylinder) 79

Tables

Table Number *Page*

1 Crane and hoist equipment inspection criteria 116
2 Overhead Crane Inspection Standards 117
3 Summary of Sprinkler System Inspection, Testing, and Maintenance 197
4 Summary of Fire Pump Testing, Maintenance, Training, and Drills 199
5 Summary of Water Spray Fixed System Inspection, Testing, and Maintenance 200
6 Summary of Private Water Fire Service Main Inspection, Testing, and Maintenance 201
7 Summary of Standpipe and Hose System Inspection, Testing, and Maintenance 202
8 Summary of Carbon Dioxide Systems Inspection, Testing, and Maintenance 204
9 Summary of Clean Agent Extinguishing Systems Inspection, Testing, and Maintenance 205
10 Summary of Valve Inspection, Testing, and Maintenance 206

1. Introduction

1.1 Maintenance

1.1.1 General

This document is intended to establish recommended practice as well as to give general advice and guidance in the maintenance of mechanical equipment owned and operated by the Bureau of Reclamation (Reclamation). Specific technical details of maintenance are included in other documents referenced in this document.

Maintenance recommendations are based on industry standards and experience in Reclamation facilities. However, equipment and situations vary greatly, and sound engineering and management judgment must be exercised when applying these recommendations. Other sources of information must be consulted (e.g., manufacturer's recommendations, unusual operating conditions, personal experience with the equipment, etc.) in conjunction with these maintenance recommendations.

1.1.2 Preventive Maintenance

Preventive maintenance (PM) is the practice of maintaining equipment on a regular schedule based on elapsed time or meter readings. The intent of PM is to "prevent" maintenance problems or failures before they take place by following routine and comprehensive maintenance procedures. The goal is to achieve fewer, shorter, and more predictable outages.

Some advantages of PM are:

- It is predictable, making budgeting, planning, and resource leveling possible.
- When properly practiced, it generally prevents most major problems, thus reducing forced outages, "reactive maintenance," and maintenance costs in general.[1]
- It assures managers that equipment is being maintained.
- It is easily understood and justified.

PM does have some drawbacks:

- It is time consuming and resource intensive.
- It does not consider actual equipment condition when scheduling or performing the maintenance.
- It can cause problems in equipment in addition to solving them (e.g., damaging seals, stripping threads).

[1] *World Class Maintenance Management*, Terry Wireman, Industrial Press Inc., 1990, pp. 7, 73.

Despite these drawbacks, PM has proven generally reliable in the past and is still the core of most maintenance programs.

PM traditionally has been the standard maintenance practice in Reclamation. The maintenance recommendations in this document are based on a PM philosophy and should be considered as "baseline" practices to be used when managing a maintenance program.

However, care should be taken in applying PM recommendations. Wholesale implementation of PM recommendations without considering equipment criticality or equipment condition may result in a workload that is too large to achieve. This could result in important equipment not receiving needed maintenance, which defeats the purpose of PM management.

To mitigate this problem, maintenance managers may choose to apply a ***consciously chosen, effectively implemented, and properly documented*** reliability-centered maintenance (RCM) program.

Whether utilizing a PM, RCM, or condition-based maintenance (CBM) program, or a combination of these, scheduled maintenance should be the primary focus of the in-house maintenance staff.[2] This will reduce reactive (emergency and corrective) maintenance. Scheduled maintenance should have a higher priority than special projects and should be the number one priority.

1.1.3 Reliability-Centered Maintenance

RCM programs are gaining in popularity and have been piloted in a few Reclamation power facilities with good results. The goal of these programs is to provide the appropriate amount of maintenance at the right time to prevent forced outages while at the same time eliminating unnecessary maintenance.

Implemented properly, RCM can eliminate some of the drawbacks of PM and may result in a more streamlined, efficient maintenance program. RCM seems very attractive in times of diminishing funding, scarcity of skilled maintenance staff, and the pressure to "stay online" due to electric utility industry deregulation.

Some features of RCM are:

- It may be labor intensive and time consuming to set up initially.
- It may require additional monitoring of quantities, like temperature and vibration, to be effective. This may mean new monitoring equipment with its own PM or more human monitoring with multiple inspections.
- It may result in a "run-to-failure" or deferred maintenance philosophy for some equipment which may cause concern for some staff and managers.

[2] *World Class Maintenance Management*, Terry Wireman, Industrial Press Inc., 1990, pg. 32.

- It may require initial and later revisions to the maintenance schedule in a "trial-and-error" fashion depending on the success of the initial maintenance schedule and equipment condition.
- It should result in a more manageable maintenance workload focused on the most important equipment.

RCM is not an excuse to move to a "breakdown maintenance" philosophy or to eliminate critical PM in the name of reducing maintenance staff/ funding. However, to mitigate problems associated with a PM program, maintenance managers may choose to apply a ***consciously chosen, effectively implemented, and properly documented*** RCM program.

For a viable RCM program at Reclamation facilities, it must:

- Be chosen as the local maintenance philosophy by management.
- Be implemented according to generally accepted RCM practices.
- Be documented so that maintenance decisions are defensible.

1.1.4 Condition-Based Maintenance

This program relies on knowing the condition of individual pieces of equipment.

Some features of CBM include:

- Monitoring equipment parameters such as temperatures, pressures, vibrations, leakage current, dissolved gas analysis, etc.
- Testing on a periodic basis and/or when problems are suspected such as Doble testing, vibration testing, and infrared scanning.
- Monitoring carefully operator-gathered data.
- Securing results in knowledgeable maintenance decisions which would reduce overall costs by focusing only on equipment that really needs attention.

Drawbacks to CBM include it being very difficult and expensive to monitor some quantities. It requires knowledgeable and consistent analysis to be effective; and also condition monitoring equipment and systems themselves require maintenance. Because of these drawbacks, it is nearly impossible to have an entirely CBM program.

1.1.5 Combination of Condition-Based and Preventive Maintenance

A combination of CBM and PM is perhaps the most practical approach. Monitoring, testing, and using historical data and PM schedules may provide the best information on when equipment should be maintained. By keeping accurate records of the "as found" condition of equipment when it is torn down for

maintenance, one can determine what maintenance was really necessary. In this manner, maintenance schedules can be lengthened or perhaps shortened, based on experience and monitoring.

1.2 Standards and References

1.2.1 Reclamation Standards

Electrical and mechanical maintenance recommended practices for some equipment are contained in other Facilities, Instructions, Standards, and Techniques (FIST) volumes that will be referenced in this report. For equipment not covered by other FIST volumes, requirements defined in this report are the recommended practices. Manufacturer's maintenance requirements, as defined in instruction books, also must be incorporated into a complete maintenance program. Other recommended practices are defined in *Power Equipment Bulletins* (PEB).

Variance from Reclamation electrical maintenance recommended practices, as defined in FIST volumes, is acceptable provided that proper documentation exists to support the variance. Refer to the *Power Review of O&M Directive and Standard and Guidebook* for further information (see section 1.7).

Recommended practices, including recommended intervals (defined in FIST volumes) are based on power industry best practices, published standards, and Reclamation's experience maintaining equipment in hydroelectric powerplants. Additional references to published standards may be found in other FIST volumes.

To access Reclamation's FIST volumes:

- Printed FIST volumes:

  Regional and Area Offices – Contact 86-68440, Hydropower Technical Services Group 303-445-2300. All others – contact National Technical Information Service, Operations Division, 5285 Port Royal Road, Springfield, Virginia 22161.

- Intranet access to FIST volumes: http://intra.usbr.gov
  Select: Quicklist; Power O&M.

- Access to Internet FIST volumes: www.usbr.gov
  Select: Programs & Activities, Power Program, Reports & Data; FIST Manuals.

This FIST volume supersedes, in part, *Power Operation and Maintenance (O&M) Bulletin No. 19 - Maintenance Schedules and Records*. Mechanical maintenance portions of *Power O&M Bulletin No. 19* are included in FIST Volume 4-1A, *Maintenance Scheduling for Mechanical Equipment*. Electrical maintenance portions of *Power O&M Bulletin No. 19* are included in FIST Volume 4-1B, *Maintenance Scheduling for Electrical Equipment.*

1.2.2 Recommended Standards and References

Current editions of the following published standards and references should be maintained locally for mechanical engineers, mechanical foremen, mechanical supervisors, and other O&M personnel to use:

- Applicable National Fire Protection Association (NFPA) Standards
- Applicable American National Standards Institute (ANSI)/American Society for Testing and Materials (ASME) Standards for cranes
- FIST Volume 1-1, *Hazardous Energy Control Program*
- Copies of all mechanical maintenance and safety FIST volumes
- Copies of all mechanical PEBs

1.3 Maintenance and Test Procedures

1.3.1 General

Maintenance activities fall into three general categories:

- *Routine Maintenance* – Activities that are conducted while equipment and systems are in service. These activities are predictable and can be scheduled and budgeted. Generally, these are the activities scheduled on a time-based or meter-based schedule derived from preventive or predictive maintenance strategies. Some examples are visual inspections, cleaning, functional tests, measurement of operating quantities, lubrication, oil tests, and governor maintenance.
- *Maintenance Testing* – Activities that involve using test equipment to assess condition in an offline state. These activities are predictable and can be scheduled and budgeted. They may be scheduled on a time or meter basis but may be planned to coincide with scheduled equipment outages. Since these activities are predictable, some offices consider them "routine maintenance" or "preventive maintenance." Some examples are governor alignments and balanced and unbalanced gate testing.
- *Diagnostic Testing* – Activities that involve using test equipment to assess the condition of equipment after unusual events, such as equipment failure/ repair/replacement or when equipment deterioration is suspected. These activities are not predictable and cannot be scheduled because they are required after a forced outage. Each office must budget for these events. Some examples are governor troubleshooting, unit balancing, and vibration testing.

This document addresses scheduling of maintenance activities in the first two categories. It does not address followup work generated by routine maintenance or maintenance testing, nor does it address diagnostic testing (with a few

exceptions). Also, maintenance staff may be used for other activities such as improvements and construction, but this guide does not address these activities.

1.4 Maintenance Schedules and Documentation

Complete, thorough, and current documentation is essential to an effective maintenance program. Whether you are performing preventive, predictive, or reliability-centered maintenance, keeping track of equipment condition and maintenance performed or planned is critical.

Maintenance recommendations contained in this report should be used as the basis for establishing or refining a maintenance schedule. Recommendations can be converted into Job Plans or Work Orders in MAXIMO or another maintenance management system. Once these job plans and work orders are established, implementation of well-executed predictive or RCM is possible.

The maintenance recordkeeping system must be kept current so that a complete maintenance history of each piece of equipment is available at all times. This is important for planning and conducting an ongoing maintenance program and provides documentation needed for the Power O&M Reviews (section 1.7). Regular maintenance and emergency maintenance must be well documented, as should special work done during overhauls and replacement.

The availability of up-to-date drawings to management and maintenance staff is extremely important. Accurate drawings are very important to ongoing maintenance, testing, and new construction; but they also are essential during emergencies for troubleshooting. In addition, accurate drawings are important to the continued safety of the staff working on the equipment.

1.5 Job Plan Templates

Job plan templates have been created to assist in developing site-specific MAXIMO Job Plans for electrical and mechanical PM. The electrical job plan templates include all PM activities prescribed in this volume and may be augmented to include manufacturer's maintenance requirements and other site-specific considerations. Local development of complete job plans that match FIST volume requirements can be expedited by adopting these templates. Templates can be accessed on the Reclamation Intranet at http://intra.usbr.gov/~hydrores/pomreview/ and selecting "Job Plan Templates" from the menu on the left.

1.6 Power O&M Forms

Power O&M (PO&M) forms have been updated and placed on the Intranet for facility use in documenting maintenance. These forms can be filled out online and printed or printed and completed by hand. PO&M forms are available at

http://intra.usbr.gov/~hydrores/pomreview/. Select "Power O&M Forms" from the menu on the left or from the Reclamation forms Web site at http://intra.usbr.gov/ forms/.

Word format files of the forms can be acquired from the Hydropower Technical Services Group at 303-445-2300, if modification for specific facility is desired.

1.7 Power O&M Reviews

Mechanical maintenance is one aspect of the Power Review of O&M Program. This program uses regularly scheduled annual (self-assessment), periodic (regionally conducted), and comprehensive (Denver conducted) reviews. Each level of review is intended to assess compliance with accepted practices in operation and maintenance. The accepted practices for mechanical equipment maintenance are defined in this and other FIST volumes, PEBs, and in the references cited in this document. As stated above in section 1.2.1, variance from these practices is acceptable if adequate justification is provided to reviewers

1.8 Limitations

This volume summarizes maintenance recommendations for mechanical equipment and directs the reader to related references. It should not be the sole source of information used in conducting maintenance activities. Other references, training, and work experience are also necessary to fully understand and carry out the recommended maintenance.

1.9 Safety During Maintenance

Performing maintenance on mechanical equipment can be hazardous. Electrical and mechanical energy can cause injury and death if not managed properly. All maintenance activity should be conducted in accordance with FIST Volume 1-1, *Hazardous Energy Control Program* (HECP) and *Reclamation Safety and Health Standards*. A job hazard analysis (JHA) must be conducted as well. Visitors, contractors, and others working under clearances must be trained in HECP and must follow all JHA and clearance procedures.

THIS PAGE INTENTIONALLY LEFT BLANK

2. Turbine and Pump Maintenance

2.1 Hydraulic Turbines

Hydraulic turbines are classified as either reaction turbines or impulse turbines referring to the hydraulic action by which the pressure or potential energy is converted to rotating or kinetic energy. The reaction turbines include the Francis and the propeller types, while the impulse turbines are represented by the Pelton type turbine.

Impulse turbines convert all available head into kinetic or velocity energy through using contracting nozzles. The jets of water from the nozzles act on the runner buckets to exert a force in the direction of flow. This force, or impulse as it is referred to, turns the turbine. Impulse turbines primarily are used for heads of 800 feet or more, although they are also used in some low-flow, low-head applications.

Water flow to an impulse turbine is controlled by a needle valve. The position of the needle valve is controlled by a governor to change speed or load. A moveable deflector plate, controlled by the governor, is positioned in front of the nozzle to rapidly deflect the water away from the turbine during a load rejection.

The head pressure in a reaction turbine is only partially converted to velocity. While the reaction turbine obtains some power from the impulse force from the velocity of the water, most of its power is a result of difference in pressure between the top and bottom of the runner buckets.

The Francis turbine is very similar in construction to a volute pump with a closed impeller (see figures 1 and 2). Water entering the spiral or scroll case is directed to the turbine runner by the guide vanes and the wicket gates. The wicket gates, controlled by the governor through hydraulic servomotors, control water flow to the turbine.

A propeller turbine is similar in appearance to a boat propeller. Water is directed and controlled in much the same manner as with the Francis turbine. A variation of the propeller turbine is the Kaplan turbine which features adjustable blades that are pivoted to obtain the highest efficiency possible at any load.

2.2 Pumps

Basically, there are two general classifications of pumps: dynamic and positive displacement. These classifications are based on the method the pump uses to impart motion and pressure to the fluid.

2.2.1 Dynamic Pumps

Dynamic pumps continuously accelerate the fluid within the pump to a velocity much higher than the velocity at the discharge. The subsequent decrease of the fluid velocity at the discharge causes a corresponding increase in pressure. The

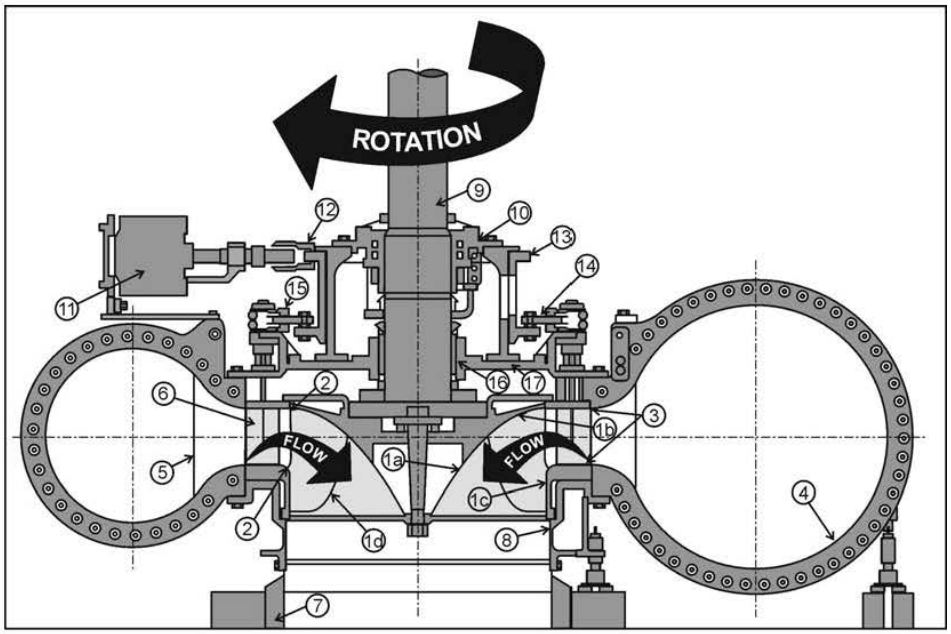

Parts of a Francis Turbine			
1a	Runner Cone	8	Discharge Ring
1b	Runner Crown	9	Turbine Shaft
1c	Runner Band	10	Turbine Guide Bearing
1d	Runner Bucket	11	Wicket Gate Servomotors
2	Wearing or Seal Ring	12	Servomotor Connecting Rod
3	Facing or Curb Plates	13	Wicket Gate operating or Shift Ring
4	Spiral or Scroll Case	14	Wicket Gate Link
5	Stay Vain	15	Wicket Gate Arm
6	Wicket Gate	16	Packing or Stuffing Box (Mechanical Seals)
7	Draft Tube	17	Head Cover

Figure 1.—Francis turbine.

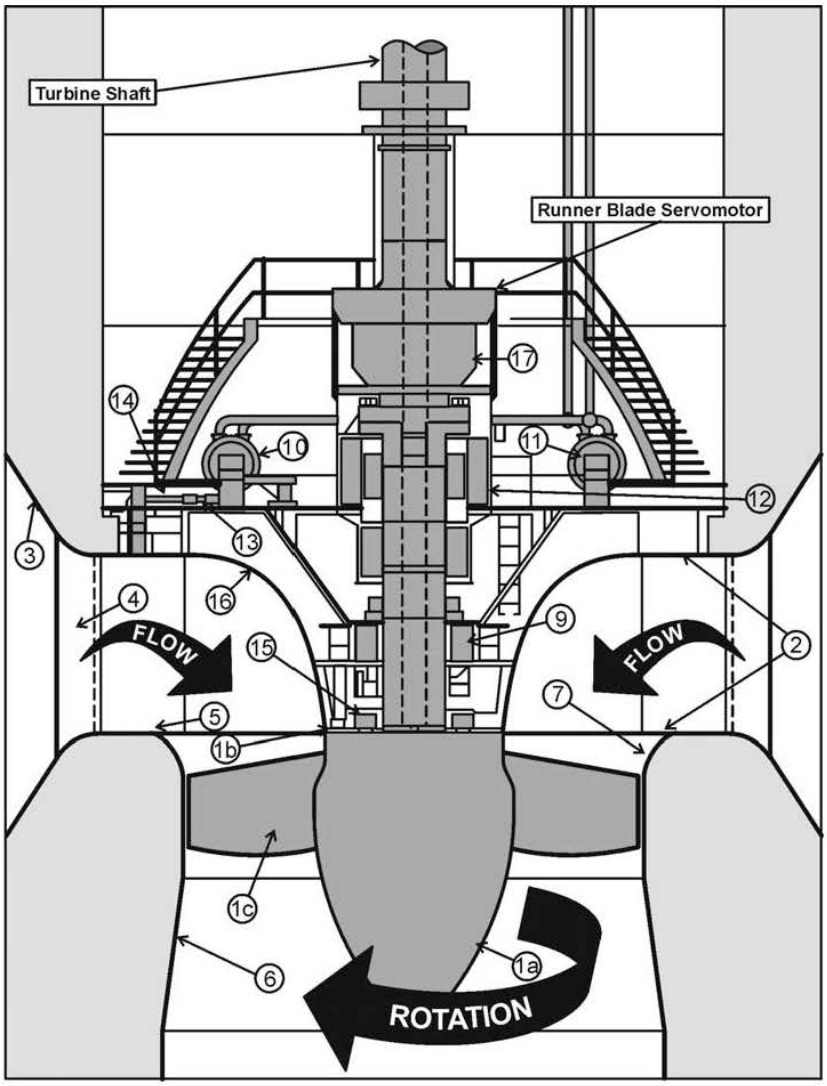

Parts of a Kaplan Turbine			
1	Turbine Runner	8	Turbine Shaft
1a	Runner Cone	9	Turbine Guide Bearing
1b	Runner Hub	10	Wicket Gate Servomotors
1c	Runner Blade	11	Servomotor Connecting Rod
2	Facing or Curb Plates	12	Wicket Gate operating or Shift Ring
3	Spiral or Scroll Case	13	Wicket Gate Link
4	Stay Vain	14	Wicket Gate Arm
5	Wicket Gate	15	Packing or Stuffing Box (Mechanical Seals)
6	Draft Tube	16	Head Cover
7	Discharge Ring	17	Runner Blade Servomotor

Figure 2.—Kaplan turbine.

dynamic pump category is made up of centrifugal pumps and special effect pumps, such as eductor and hydraulic ram pumps.

Eductors, or jet pumps as they are sometimes called, use a high-pressure stream of fluid to pump a larger volume of fluid at a lower pressure. An eductor consists of three basic parts: the nozzle, the suction chamber, and the diffuser. The high-pressure fluid is directed through a nozzle to increase its velocity. The high velocity creates a low-pressure area that causes the low-pressure fluid to be drawn into the suction chamber. The low-pressure fluid is then mixed with the high velocity fluid as it flows through the diffuser, and the velocity energy of the mixture is converted into pressure at the discharge. Eductors commonly are used in powerplants and dams to dewater sumps below the inlet of the sump pumps. Some plants use eductors to pump cooling water for the units.

By far, the most common type of dynamic pump is the centrifugal pump. The impeller of a centrifugal pump, the rotating component of the pump which imparts the necessary energy to the fluid to provide flow and pressure, is classified according to the direction of flow in reference to the axis of rotation of the impeller. The three major classes of centrifugal impellers are:

1. Axial-flow
2. Radial-flow
3. Mixed-flow

Impellers may be classified further by their construction. The impeller construction may be:

1. Open
2. Semi-open
3. Closed

An open impeller consists of vanes attached to a central hub. A semi-open impeller has a single shroud supporting the vanes, usually on the back of the impeller. The closed impeller incorporates shrouds on both sides of the vanes. The shrouds totally enclose the impeller's waterways and support the impeller vanes.

Centrifugal pumps are also classified by the means in which the velocity energy imparted to the fluid by the impeller is converted to pressure. Volute pumps use a spiral or volute shaped casing to change velocity energy to pressure energy. Pumps which use a set of stationary diffuser vanes to change velocity to pressure are called diffuser pumps. The most common diffuser type pumps are vertical turbine pumps and single stage, low head, propeller pumps. Large volute pumps may also have diffuser vanes; but while these vanes direct the water flow, their main purpose is structural and not energy conversion.

Centrifugal pumps are further classified as either horizontal or vertical, referring to the orientation of the pump shaft. A vertical volute pump is shown in figure 3. In comparison to horizontal pumps, vertical pumps take up less floor space; the pump suction can be positioned more easily below the water surface to eliminate the need for priming; and the pump motor can be located above the water surface to prevent damage in the event of flooding. Vertical pumps can be either dry-pit or wet-pit. Dry-pit pumps are surrounded by air, while wet-pit pumps are either fully or partially submerged. The dry-pit pumps commonly are used in medium to high head, large capacity pumping plants. These large dry-pit pumps are generally volute pumps with closed, radial flow impellers.

There are a variety of wet-pit pump designs for differing applications. One of the most common types is the vertical turbine pump. The vertical turbine pump is a diffuser pump with either closed or semi-open, radial-flow, or mixed-flow impellers. Vertical turbine pumps, while most commonly used for deep well applications, have a wide variety of uses, including irrigation pumping plants and sumps in powerplants and dams (figure 4). This type of pump normally is constructed of several stages. A stage consists of an impeller and its casing, called a bowl. The main advantage of this type of construction is that system pressure can be varied by simply adding or reducing the number of stages of the pump.

Horizontal pumps are classified according to the location of the suction pipe. The suction can be from the end, side, top, or bottom. Also common in horizontal pumps is the use of double suction impellers. In a double suction impeller pump, water flows symmetrically from both sides into the impeller which helps to reduce the axial thrust load (figure 5). In a hydroelectric plant, horizontal pumps are normally used for fire water and cooling water applications.

2.2.2 Positive Displacement Pumps

Positive displacement pumps enclose the fluid through the use of gears, pistons, or other devices and push or "displace" the fluid out though the discharge line. Displacement pumps are divided into two groups—reciprocating (such as piston and diaphragm pumps) and rotary (such as gear, screw, and vane pumps). Since positive displacement pumps do "displace" the fluid being pumped, relief valves are required in the discharge line, ahead of any shutoff valve or any device that could conceivably act as a flow restriction.

Reciprocating piston or plunger pumps are suitable where a constant capacity is required over a variety of pressures. Piston and plunger pumps are capable of developing very high pressures, although capacities are somewhat limited. These pumps provide a pulsating output which, depending on the application, may be objectionable. The use of reciprocating pumps in hydroelectric powerplants is limited.

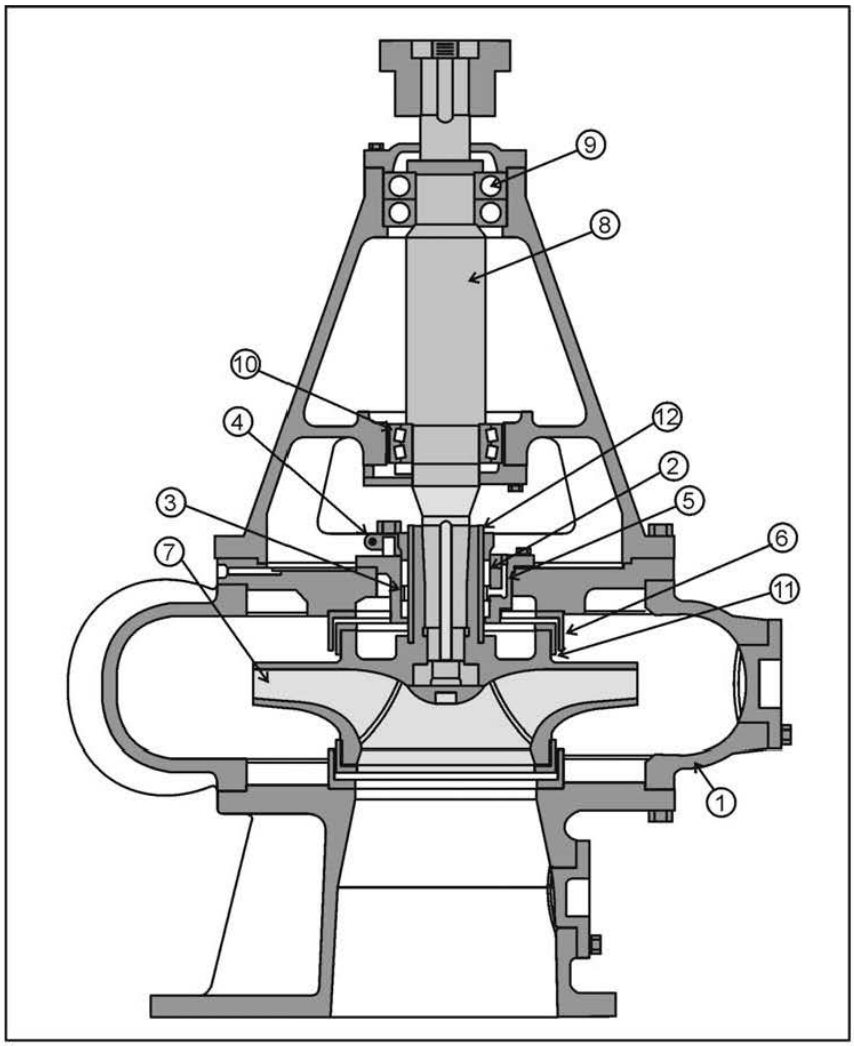

Parts of a Vertical Volute Pump	
Stationary Parts	Rotating Parts
1 Pump Case	7 Impeller
2 Packing	8 Pump Shaft
3 Lantern Ring	9 Thrust Bearing
4 Packing Gland	10 Line Bearing
5 Packing Water Supply	11 Rotating Wear Ring
6 Stationary Wear Ring	12 Shaft Sleeve

Figure 3.—Vertical volute pump.

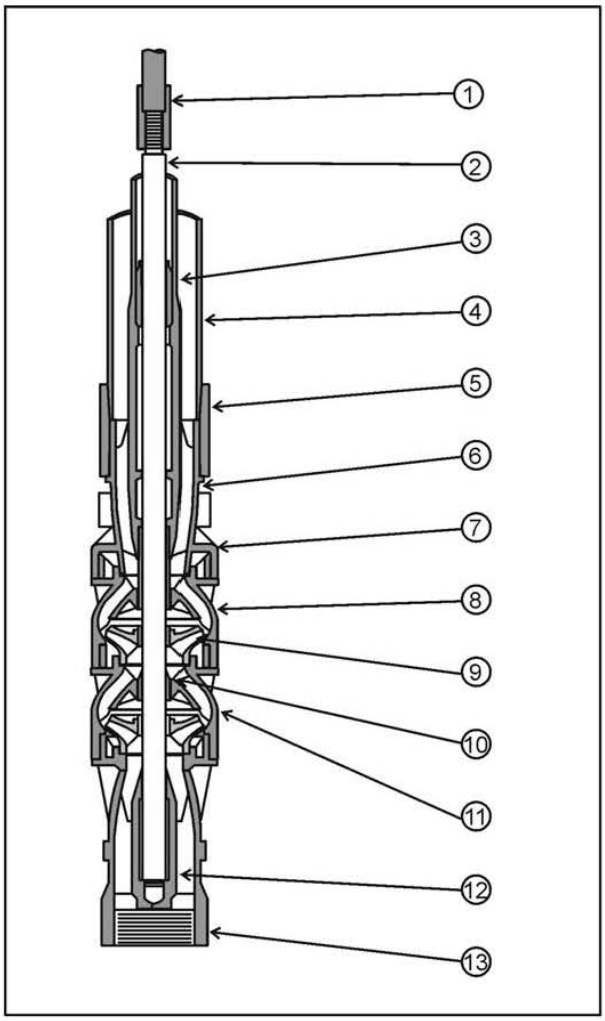

Two-Stage Vertical Turbine Pump			
1	Pump Shaft Coupling	8	Top Bowl
2	Pump Shaft	9	Impeller
3	Connector Bearing	10	Intermediate Bowl Bearing
4	Column Pipe	11	Intermediate Bowl
5	Column Pipe Coupling	12	Suction Case Bearing
6	Discharge Case	13	Suction Case
7	Top Bowel Bearing		

Figure 4.—Two-stage vertical turbine pump.

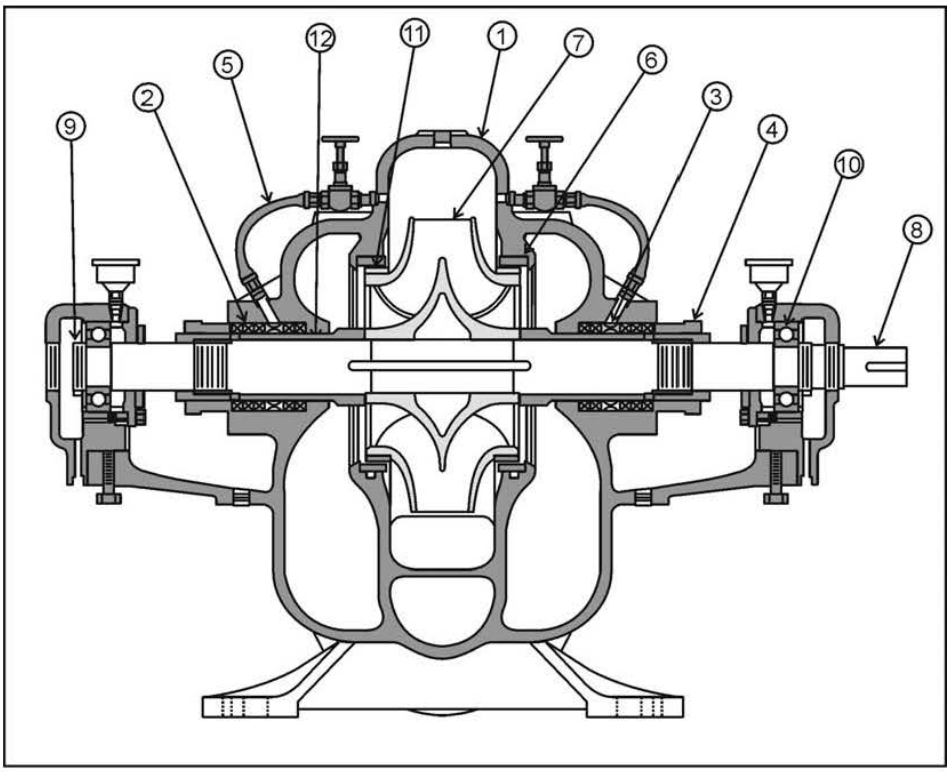

Double Suction Horizontal Volute Pump	
Stationary Parts	Rotating Parts
1 Pump Case	7 Impeller
2 Packing	8 Pump Shaft
3 Lantern Ring	9 Thrust Bearing
4 Packing Gland	10 Line Bearing
5 Packing Water Supply	11 Rotating Wear Ring
6 Stationary Wear Ring	12 Shaft Sleeve

Figure 5.—Double suction horizontal volute pump and parts list.

Rotary positive displacement pumps are used in a variety of applications, one of the most common being hydraulic systems. Gear, vane, radial piston, and axial piston pumps (figure 6) are some of the most common rotary pumps used in hydraulic systems. Screw pumps, with a single helical screw or meshing multiple screws, most commonly are used for fluid transfer, although they are sometimes used in hydraulic system applications.

Gear pumps are relatively simple in design, relying on the meshing of the mating gears and the fit of the gears in the pump casing to pump the fluid. External gear pumps use two meshing gears, usually spur or herringbone types, in a close fitting casing. The fluid is pumped as it is trapped between the rotating gears and the casing and moved from the suction of the pump to the discharge. An internal gear pump uses an external gear rotating eccentrically within and driving an internal gear to pump the fluid.

Vane pumps consist of a case and a single eccentric rotor with multiple vanes sliding in slots in the rotor. Centrifugal force keeps the vanes in contact with the interior of the pump casing. As the rotor rotates, the fluid is drawn into the pump by the gradually increasing volume between the vanes; and then it is pushed out through the discharge as the volume gradually decreases.

The radial piston pump is similar in construction to the vane pump in that it has a single rotor, eccentric to the pump housing; but instead of vanes, it has radial pistons. The pistons are held against the pump housing by centrifugal force, and the fluid is pumped by the reciprocating action of the pistons in their bore. The fluid ports are in the center of the rotor.

The axial piston pump rotor consists of a round cylinder block with multiple cylinders, parallel to the cylinder block axis. The cylinder block rotates at an angle to the axis of the drive shaft, and the fluid is pumped by reciprocating action of the pistons in the cylinder block.

2.3 Cavitation Erosion, Abrasive Erosion, and Corrosion

Pump impellers, turbine runners, and their related components may be damaged by a number of different actions—the most common being cavitation erosion, abrasive erosion, and corrosion. The appropriate repair procedure will depend on the cause of the damage.

Cavitation is the formation of vapor bubbles or cavities in a flowing liquid subjected to an absolute pressure equal to, or less than, the vapor pressure of the liquid. These bubbles collapse violently as they move to a region of higher pressure causing shock pressures which can be greater than 100,000 pounds per square inch (psi). When audible, cavitation makes a steady crackling sound similar to rocks passing through the pump or turbine. Cavitation erosion or pitting occurs when the bubbles collapse against the metal surface of the impeller or turbine runner—most frequently on the low-pressure side of the impeller inlet vanes

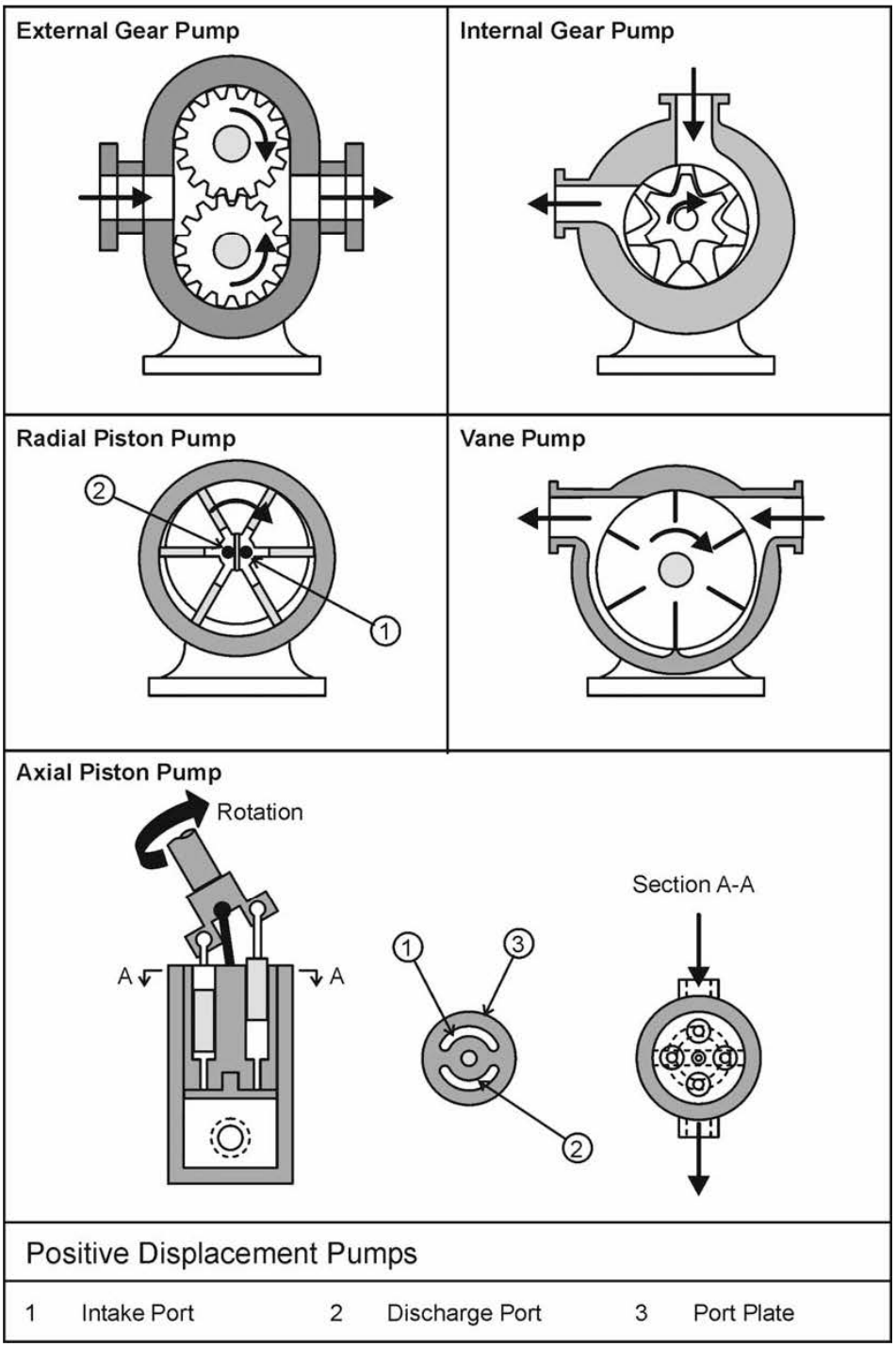

Figure 6.—Positive displacement pumps.

or turbine buckets. Cavitation cannot only severely damage the pump or turbine, but it also can reduce substantially the capacity and, therefore, lessen the efficiency.

Abrasive erosion is removing metal mechanically by suspended solids, such as sand, in the liquid flowing through an impeller or turbine. The rate of wear is directly related to the velocity of the liquid; so wear will be more pronounced at the discharge of the nozzle of impulse turbines, near the exit vanes and shrouds of pump impellers and near the leading edge of reaction turbines buckets where the liquid velocity is highest.

Corrosion damage to submerged or wet metal is the result of an electrochemical reaction. The electrochemical reaction occurs when a galvanic cell is created by immersing two different elements in an electrolyte, causing an electric current to flow between the two elements. The anode, or the positive electrode of the cell, gradually dissolves as a result of the reaction. With the water acting as an electrolyte, irregularities, such as variation in surface finish or imperfections in the metal's composition, create small galvanic cells over the entire surface of the metal. Corrosion damage occurs as the anodes of these cells dissolve. Corrosion, unlike abrasive erosion, is generally independent of the liquid velocity. Pitting caused strictly by corrosion will be uniform over the entire surface.

Diagnosis of the problem can be difficult as the damage may be caused by more than one action. As a metal corrodes, the products of corrosion form a protective film on the metal surface. This film protects the base metal from further corrosive attack. An erosive environment will tend to remove this film leaving the metal susceptible to corrosion damage. Similarly, where cavitation erosion is occurring, the metal will be prone to further damage from corrosion.

Severe erosion or corrosion damage may warrant the replacement of the damaged parts with parts constructed of a material that is more erosion or corrosion resistant. If severe cavitation erosion occurs during normal operation, a new impeller, runner, or other design changes may be required. Obviously, replacing an impeller or other major components can be a very expensive endeavor and only should be done after careful economic analysis. Some factors to consider when making an analysis are the cost and effectiveness of past repairs and any gain in efficiency or output that may be obtained by replacement.

Except for severe cases, repair instead of replacement is the most economical solution. The repair procedure will depend on the cause of the damage. Welding is the most successful method of repair for cavitation damage. Repair with nonfusing materials, such as epoxies and ceramics, generally is not successful because the low bond strength of these materials, usually less than 3,000 psi, is not capable of withstanding the high shock pressures encountered during cavitation. Prior to any weld repair, a detailed welding procedure should be developed. Welding, performed incorrectly, can cause more damage, by distortion and cracking, than the cavitation did originally. Cavitation repair is discussed in more detail in FIST Volume 2-5, *Turbine Repair*.

Corrosion or erosion damage, if the pitting is deep enough, can also be repaired by welding. If the pitting definitely is not caused by cavitation, other coatings or fillings may be acceptable. The epoxies and ceramics discussed earlier, if properly applied, can be helpful in filling in pitting damage caused by corrosion or erosion. In a corrosive environment, a coating of paint, after the original contour has been restored, can offer protection by forming a barrier between the metal and the electrolyte and preventing the electrochemical reaction.

Erosion resistant coatings, to be effective, must be able to withstand the cutting action of the suspended abrasive. A coating of neoprene has been proven successful for sand erosion protection. Other available coatings have also been proven to resist erosion, but many of these coatings can be difficult to apply and maintain and, because of coating thickness, may restrict water passages. Choose erosion resistant coatings based on the design of the turbine or pump and the severity of erosion.

2.4 Wearing Rings

Wearing rings, or seal rings as they are also called, provide a renewable seal or leakage joint between a pump impeller or a turbine runner and its casing. As the name implies, these rings can wear over time; and as the clearance increases, efficiency can decrease. As a general rule, when the wearing ring clearance exceeds 200 percent of the design clearance, the wearing rings should be replaced or renewed. If a design does not include replaceable wearing rings, it may be necessary to build up the wearing ring area by welding or some other acceptable process and machining back to the original clearances; remachine the wear ring area and impeller or runner to accept replaceable wearing rings; or, on small pumps, replace the impeller and casing.

The location of the wearing rings depends on the design of the pump or turbine. Francis turbines and most closed impeller pumps have two wearing rings, although some pump impellers may only have a suction side wearing ring. Propeller turbines, open impeller. and many semi-open impeller pumps do not have wearing rings, relying instead on a close fit between the runner or impeller vanes and the casing to control leakage.

2.5 Packing/Mechanical Seals

2.5.1 Packing

The most common method of controlling leakage past a pump, turbine, or wicket gate shaft is by using compression packing. The standard packing or stuffing box will contain several rings of packing with a packing gland to hold the packing in place and maintain the desired compression. Some leakage past the packing is necessary to cool and lubricate the packing and shaft. If additional lubrication or cooling is required, a lantern ring also may be installed along with an external packing water source.

Over time, the packing gland may have to be tightened to control leakage. To prevent burning the packing or scoring the shaft when these adjustments are made, most compression packing contains a lubricant. As the packing is tightened, the lubricant is released to lubricate the shaft until leakage past the packing is reestablished. Eventually, the packing can be compressed to a point where no lubricant remains and replacement is required. Continued operation with packing in this condition can severely damage the shaft.

When packing replacement is necessary, remove all of the old packing. If the packing box is equipped with a lantern ring, this also must be removed along with all of the packing below it. With the packing removed, special attention should be given to cleaning and inspecting the packing box bore and the shaft or shaft sleeve. To provide an adequate sealing surface for the new packing, a severely worn shaft or shaft sleeve should be repaired or replaced. Likewise, severe pitting in the packing box bore should be repaired. For the packing to seal against a rough packing box bore requires excessive compression of the packing. This over compression of the packing will lead to premature wear of the shaft or shaft sleeve.

On small pumps, the shaft runout at the packing box should be checked by manually rotating the shaft and measuring the runout with a dial indicator. In most cases, total indicated runout should not exceed 0.003 inch. If the runout is excessive, the cause should be found and corrected. Bent shafts should be replaced and misalignment corrected.

There is a number of different types of packing available; so when choosing new packing, ensure that it is the correct size and type for the intended application. All of the relevant conditions that the packing will operate under, such as shaft size and rotational speed, must be considered. Installing the wrong packing can result in excessive leakage, reduced service life, and damage to the shaft or sleeve.

The new packing should be installed with the joints staggered 90 degrees apart. It is sometimes helpful to lubricate the packing prior to installation. The packing manufacturer should be consulted for recommendations of a lubricant and for any special instructions that may be required for the type of packing being used. With all of the packing and the lantern ring in place, the packing gland should be installed finger tight.

There should be generous leakage upon the initial startup after installing new packing. The packing gland should be tightened evenly and in small steps until the leakage is reduced sufficiently. The gland should be tightened at 15- to 30-minute intervals to allow the packing time to break-in. The temperature of the water leaking from the packing should be cool or lukewarm, never hot. If the water is hot, back off the packing gland.

2.5.2 Mechanical Seals

Mechanical seals are used in both pump and turbine applications. Mechanical seals allow very little leakage and can be designed to operate at high pressures. Properly installed mechanical seals will have a long service life and require little maintenance.

Basically, a mechanical seal on a small pump consists of a stationary and a rotating member with sealing surfaces perpendicular to the shaft. The highly polished sealing surfaces are held together by a combination of spring and fluid pressure and are lubricated by maintaining a thin film of the fluid sealed between the surfaces.

There is a wide variety of mechanical seals available for small pump applications, each having its own distinct installation procedure; therefore, it is important to follow the seal manufacturer's installation instructions as closely as possible. The manufacturer also should provide information about the allowable shaft runout and endplay for their particular seal.

Mechanical seals used in hydraulic turbines and large pumps consist of sealing segments, usually made of carbon, held against the shaft by spring tension and lubricated by a thin film of water. These seals usually require grease lubrication prior to startup if the unit is shut down for extended periods.

Since mechanical seals are precisely made and rely on very tight tolerances to operate successfully, great care must be taken during installation. Just a small amount of dirt or other contaminants on the polished sealing surfaces can allow leakage past the seal and reduce the seal's life.

Seal water is provided on most larger seals to help cool and keep the seals clean. The seal water must be clear, clean water. Some type of filtration should be installed if there is any silt or sand in the seal water supply, since contaminants can quickly damage the seals.

2.6 Bearings

The purpose of the bearings is to locate and support the shafts of a pump or turbine. The bearings can provide radial support (line or guide bearings), axial support (thrust bearings), or both. The most common types of bearings are fluid film and antifriction.

2.6.1 Fluid Film Bearings

Fluid film bearings derive their load carrying capacity through forming an "oil wedge" as the shaft or thrust runner rotates. Forming this "oil wedge" is similar to the fluid wedge that forms under a speeding boat, raising its bow out of the water. The force of the wedge in a bearing must be sufficient to balance the load to the bearing surfaces.

Fluid film, or plain bearings, normally are used on turbines and large pumps and can be in the form of sleeve bearings (either solid or split, tilting pads, or pivoted thrust shoes). These bearings usually consist of a cast iron or steel bearing shell with a tin- or lead-based babbitt lining. Bronze bushings are used for line shaft bearings in vertical, wet-pit pumps and on some horizontal pumps.

The thrust and upper guide bearings of large vertical generators are insulated from the frame to prevent circulating current from passing through the bearing. The bearing can be quickly damaged or destroyed if not adequately insulated. Test terminals usually are provided to check the insulation. Refer to FIST Volume 3-11, *Miscellaneous Power O&M Instructions*, for more information on bearing insulation testing.

2.6.2 Antifriction Bearings

Through using rolling elements, the antifriction bearing utilizes the low coefficient of rolling friction, as opposed to that of sliding friction of the fluid film bearing, in supporting a load. The most common type of antifriction bearings are "ball" and "roller" bearings, referring to the shape of the bearing's rolling elements. These bearings also are classified as "radial," "radial-thrust," or "thrust" bearings according to the type of load they are meant to support.

An antifriction bearing is a delicate, precision-made piece of equipment, and great care should be taken during installation. The bearing manufacturer will usually provide instructions and precautions for installing a particular bearing, and these instructions should be followed closely. Cleanliness is probably the most important thing to consider in handling antifriction bearings. Any dust or dirt can act as an abrasive and quickly wear the bearing's rolling elements; therefore, it is important to work with clean tools and clean hands and to clean the bearing housings, covers, and shaft before installation. The new bearing should not be cleaned or wiped before installation unless it is recommended by the manufacturer. Bearings should be pressed onto shafts using adapters that apply even pressure to the inner race only. Never hammer a bearing onto a shaft.

2.7 Shaft Couplings

Couplings are used to connect the shaft of a driver, such as a turbine or a motor, to the shaft of a driven machine, such as a pump or generator. There are basically two types of couplings: rigid and flexible.

Rigid couplings require precise alignment and most commonly are used in vertical units where the entire weight is supported by thrust bearings in the motor or generator. Flanged and threaded couplings are the most widely used rigid couplings. Flanged couplings are used on large, vertical units and consist of precisely machined flanges on each shaft, connected by a series of coupling bolts around the perimeter of the flanges. The coupling bolts are typically body-fit bolts. Threaded couplings, used to connect the line shafts of vertical turbine pumps, are cylindrically shaped with internal threads matching

the external threads on the line shafts. The shafts to be coupled simply are screwed tightly into either end of the coupling.

Flexible couplings are designed to accommodate slight misalignment between shafts and, to some extent, dampen vibration. The amount of allowable misalignment is completely dependent on the design of the particular coupling. Since there are a number of flexible coupling designs, tolerances for misalignment should be obtained from the coupling manufacturer. The flexibility of the couplings can be provided through clearances between mating parts, as in gear and chain couplings, or through using a flexible material in the coupling, as in flexible disk and compression couplings. Horizontal pumps usually employ some sort of flexible coupling to connect the pump to its driver.

If properly aligned, most couplings should require very little maintenance outside of periodic inspection and, in some cases, lubrication. Over time, the alignment between the pump and its driver can deteriorate, increasing stress on the coupling which can lead to a shorter life.

2.8 Shaft Alignment

Misalignment is a common and sometimes serious problem. Poor alignment can cause premature wear or failure of bearings, overheating of shaft couplings, and, in extreme cases, cracked or broken shafts. The procedure for alignment depends on the type of equipment and its design.

Large vertical units, suspended from a thrust bearing in the motor or generator, require making the shaft plumb and the guide bearings concentric. The procedure for aligning these units is discussed in detail in FIST Volume 2-1, *Alignment of Vertical Shaft Hydro Units*.

The lineshafts of vertical turbine pumps are held in alignment by lineshaft bearings in the pipe column. The proper alignment of the lineshaft depends on the proper assembly of the pipe column and the bearing retainers. Depending on the design, the pump motor to lineshaft coupling may be aligned by the face and rim method or the reverse indicator method described below. Refer to the pump manufacturer's instructions for specific directions for assembly and alignment.

2.8.1 Horizontal Pump Alignment

Horizontal pumps usually are coupled to the pump driver with a flexible coupling. The amount of misalignment a flexible coupling can tolerate is dependent on the coupling's design and characteristics, such as speed and torque, of the machines being coupled. The coupling's manufacturer should provide installation instructions indicating the allowable tolerances for a particular design. A horizontal pump usually can be aligned acceptably by either the face and rim method or the reverse indicator method. In most cases, the pump driver is aligned to the pump, as the pump is usually connected to rigid piping and is more difficult of move.

There are a number of laser alignment systems available for horizontal shaft alignment. These systems typically have a laser that mounts to one shaft and a target that mounts to the other shaft. A microprocessor takes the data from the laser and target and calculates the required movement and shim placement. These systems greatly reduce the time required for the alignment process.

Preliminary Checks for Alignment of Horizontal Pumps.—

1. At least 0.125 inch of nonrusting shims should be installed under each leg of the motor to allow for adjustments that may be required during the alignment procedure.

2. Compensation should be made for any "soft" or "dead" foot condition. A "soft foot" condition is comparable to a short leg on a four-legged table. To check for a "soft foot," make sure all four feet are securely bolted to the baseplate. With a dial indicator, check the rise of each foot as its holddown bolt is loosened. Retighten the holddown bolt after the rise is recorded, so that only one bolt is loose at a time. If one foot rises more than the other three, that foot is the "soft foot." For example, if one foot rises 0.005 inch while the other three rise only 0.002 inch, a 0.003-inch shim should be added to the "soft foot."

3. The holddown bolt holes should be checked for sufficient clearance to allow for movement during the alignment procedure.

4. Jacking bolts or other fixtures for moving the motor should be fabricated or procured.

5. The mounting brackets and extension bars used for the indicators should be constructed to minimize sag. Sag is the effect of gravity on the indicator extension bar and can greatly affect the accuracy of the readings when using the reverse indicator method or rim readings of the face and rim method. The sag of an indicator bar can be determined by securely attaching the bar to a section of rigid bar stock or a shaft mandrel. The bar stock or mandrel can be supported and rotated by hand or between centers on a lathe. With the indicator bar positioned on top, zero the indicator and rotate the bar stock 180 degrees. The indicator reading will be twice the actual amount of bar sag (figure 7). To correct alignment readings for sag, add twice the amount of bar sag to the bottom indicator reading. The bar sag is always expressed as a positive number regardless of indicator convention.

Important: The procedures described below for the face and rim and the reverse indicator alignment methods assume that movement towards the indicator moves the indicator needle in the positive direction, while movement away from the indicator moves the needle in the negative direction.

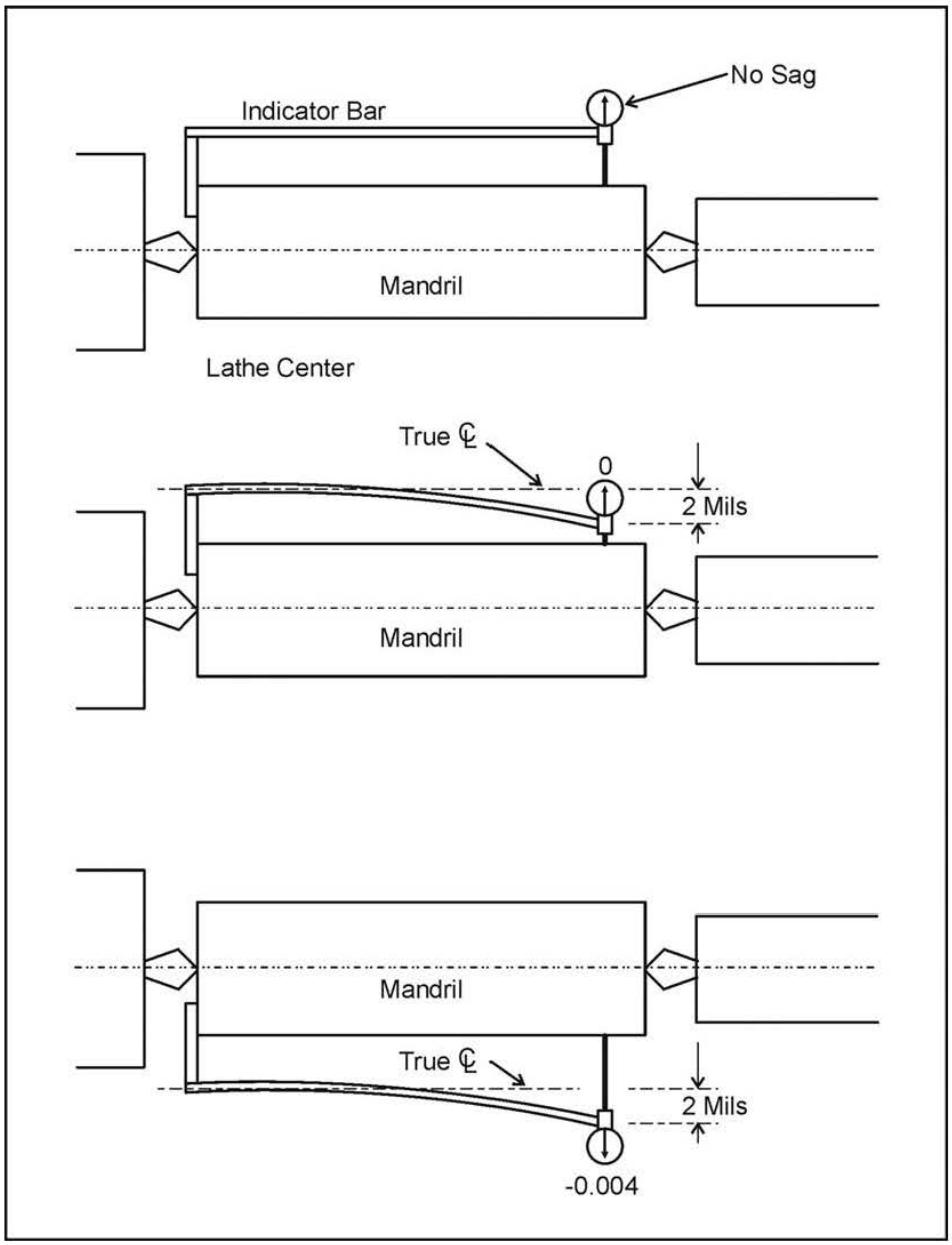

Figure 7.—Checking indicator bar for sag.

If the indicator used has the opposite sign convention—that is, movement towards the indicator moves the needle in the negative direction—enter the opposite sign than what is read onto the worksheet.

2.8.2 Face and Rim Alignment Method

The face and rim method of alignment utilizes a dial indicator attached to one of the coupling flanges to check for angular (dogleg) and parallel (offset) misalignment (figure 8). Indicator readings can be taken by rotating just one shaft; but to compensate for an untrue surface on the face or rim of the coupling flange, both shafts should be rotated together in the direction of normal rotation. If it is not possible to rotate both shafts, the indicator base should be attached to the shaft that is rotated. The procedure is the same whether one or both shafts are rotated. From the dial indicator readings and the dimensions of the motor, the amount each leg should be moved can be determined analytically. The Face and Rim Worksheet simplifies the required calculations. The following procedure uses the Face and Rim Worksheet (figures 9 and 10).

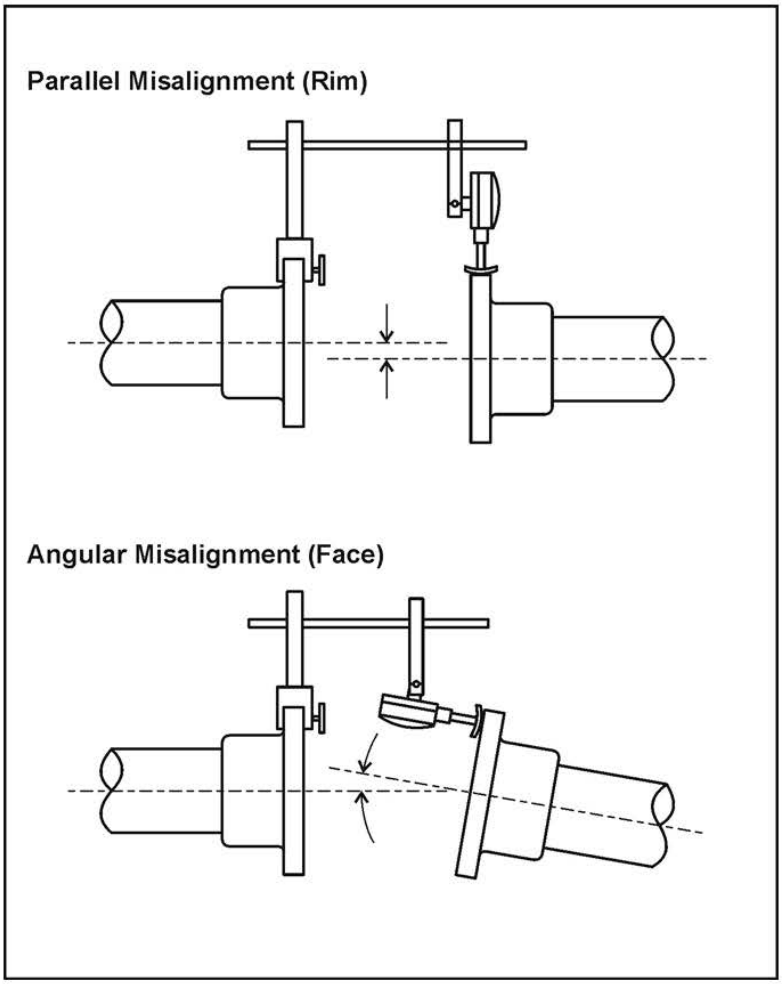

Figure 8.—Face and rim alignment method.

Face and Rim Alignment Worksheet

Face Readings

	Column 1 Reading	Column 2 Twice Bar Sag	Column 3 Readings Corrected for Bar Sag Column 1 + Column 2	Column 4 Bottom - Top Left - Right	Column 5 Outboard Leg Move Column 4 * B/2R	Column 6 Inboard Leg Move Column 4 * B/2R
Top						
Bottom						
Right						
Left						
Top						

Rim Readings

	Column 1 Reading	Column 2 Twice Bar Sag	Column 3 Readings Corrected for Bar Sag Column 1 + Column 2	Column 4 Top - Bottom Right - Left	Column 5 Outboard Leg Move 1/2 Column 4	Column 6 Inboard Leg Move 1/2 Column 4
Top						
Bottom						
Right						
Left						
Top						

Total Movement for Motor Legs

	Column 1 Total Move for Outboard Legs Face Col. 5 + Rim Col. 5	Column 2 Direction of Move for Outboard Legs (Sign of Col. 1) + Up Right - Down Left	Column 3 Total Move for Inboard Legs Face Col. 6 + Rim Col. 6	Column 4 Direction of Move for inboard Legs (Sign of Col. 1) + Up Right - Down Left
Top/Bottom				
Right/Left				

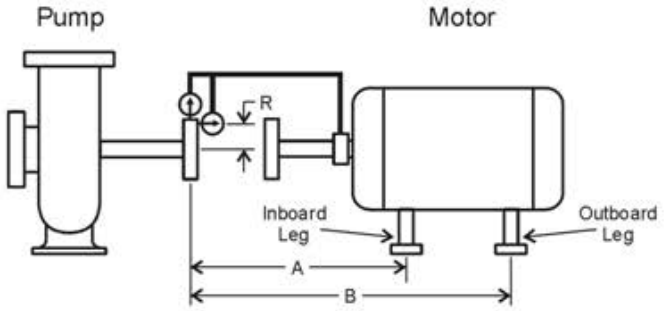

A = _____ B = _____ R = _____

Bar Sag = _____

Figure 9.—Face and rim alignment worksheet.

Face and Rim Alignment Worksheet

Face Readings

	Column 1 Reading	Column 2 Twice Bar Sag	Column 3 Readings Corrected for Bar Sag Column 1 + Column 2	Column 4 Bottom - Top Left - Right	Column 5 Outboard Leg Move Column 4 * B/2R	Column 6 Inboard Leg Move Column 4 * B/2R
Top	0	0	0	+1	+4	+1
Bottom	+1	0	+1			
Right	+3.5	0	+3.5	-2.5	-10	-2.5
Left	+1	0	+1			
Top	0					

Rim Readings

	Column 1 Reading	Column 2 Twice Bar Sag	Column 3 Readings Corrected for Bar Sag Column 1 + Column 2	Column 4 Top - Bottom Right - Left	Column 5 Outboard Leg Move 1/2 Column 4	Column 6 Inboard Leg Move 1/2 Column 4
Top	0	0	0	+10	+5	+5
Bottom	-12	+2	-10			
Right	-5	0	-5	+2	+1	+1
Left	-7	0	-7			
Top	0					

Total Movement for Motor Legs

	Column 1 Total Move for Outboard Legs Face Col. 5 + Rim Col. 5	Column 2 Direction of Move for Outboard Legs (Sign of Col. 1) + Up Right - Down Left	Column 3 Total Move for Inboard Legs Face Col. 6 + Rim Col. 6	Column 4 Direction of Move for inboard Legs (Sign of Col. 1) + Up Right - Down Left
Top/Bottom	+9	up	+6	up
Right/Left	-9	left	-1.5	left

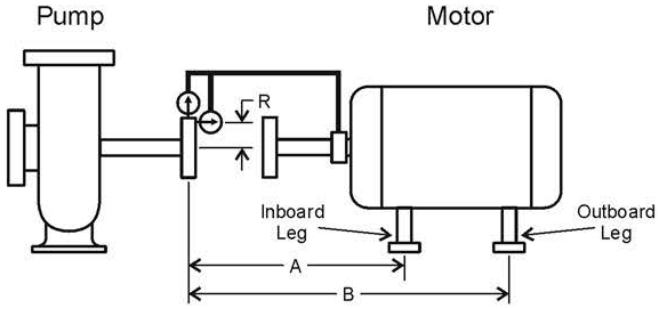

A = 10" B = 40" R = 5"

Bar Sag = 0.001"

Figure 10.—Face and rim alignment worksheet example.

Face Reading.—

1. Attach the indicator base to the motor coupling and adjust the indicator so that the button is resting near the outer edge of the pump coupling flange face. Measure the distance from the centerline of the indicator button to the shaft centerline and enter this value on the worksheet as dimension R. Measure the horizontal distance from the face of the pump coupling flange to the center of the inboard leg and enter this value on the worksheet as the dimension A. Measure the horizontal distance from the face of the pump coupling flange to the center of the outboard leg and enter this value on the worksheet as the dimension B.

2. Rotate the shaft with the indicator so that the indicator is at the top or 12 o'clock position and zero the indicator.

3. Rotate both shafts, preferably in the direction of normal rotation, and record the indicator readings at 90-degree intervals. For consistency, right and left readings should be designated for both shafts looking from the pump end towards the motor end. The indicator should read zero at 360 degrees. If it doesn't, zero the indicator and retake the readings.

Rim Reading.—

1. Enter twice the actual amount of bar sag in Column 2, Bottom Reading. Attach the indicator base to the motor coupling flange and adjust the indicator so that the button is resting on the rim of the pump coupling flange.

2. Rotate the shaft with the indicator so that the indicator is at the top or 12 o'clock position and zero the indicator.

3. Rotate both shafts, preferably in the direction of normal rotation, and record the indicator readings at 90-degree intervals. For consistency, right and left readings should be designated for both shafts looking from the pump end towards the motor end. The indicator should read zero at 360 degrees. If it doesn't, zero the indicator and retake the readings.

Calculations.—With all the readings entered in Column 1 for both the Face and Rim readings, follow the directions in each column.

Face and Rim Readings.—

Column 1

These are the actual readings obtained from the dial indicator.

Column 2

Enter twice the actual amount of bar sag for the fixture being used.

Column 3

Add Columns 1 and 2. Column 2 is the effect of bar sag and is only added to the bottom reading of the Rim Readings.

Column 4

Face: Subtract the top from the bottom and the right from the left from the corrected readings in Column 3.

Rim: Subtract the bottom from the top and the left from the right from the corrected readings in Column 3.

Column 5

Face: This is the amount of movement required at the outboard legs to correct the angular misalignment. Multiply the value in Column 4 by the dimension B, divided by two times the dimension R.

Rim: This is the amount of movement required at the outboard legs to correct the parallel misalignment. Multiply the value in Column 4 by ½.

Column 6

Face: This is the amount of movement required at the inboard leg to correct the angular misalignment. Multiply the value in Column 4 times the dimension B, divided by two times the dimension R.

Rim: This is the amount of movement required at the inboard leg to correct the parallel misalignment. Multiply the value in Column 4 by ½.

Total Movement for Motor Legs.—This part of the table sums the required movement at each leg for parallel and angular misalignment to determine the total required movement.

Column 1

Add the value in Face Column 5 to the value in Rim Column 5 to determine the total movement required for outboard legs.

Column 2

Determine the direction of the required movement by the sign of the value in Column 1. A positive value means the motor should be moved up or right. A negative value means the motor should be moved down or left.

Column 3

Add the value in Face Column 6 to the value in Rim Column 6 to determine the total movement required for inboard legs.

Column 4

Determine the direction of the required movement by the sign of the value in Column 1. Positive values mean the motor should be moved up or right. Negative values mean the motor should be moved down or left.

2.8.3 Reverse Indicator Method

The reverse indicator method of alignment can be used when it is possible to rotate both shafts. This method uses two dial indicators, one attached to each shaft, taking a reading on the opposite shaft. Indicator brackets are available that allow the indicator to be attached directly to the shaft, indicating off the indicator bar. This arrangement reduces bar sag and eliminates inaccuracies caused by a poor surface condition of the shaft. From the data obtained by the reverse indicator method, it is possible to determine, either analytically or graphically, the movement or shims necessary to align the shafts. A graphical method is presented below using the Reverse Indicator Alignment Worksheet (figures 11 and 12).

Record Indicator Readings.—

1. Attach indicator bars and indicators to shafts and position shafts so that the pump indicator, that is the indicator nearest the pump, is on top and the motor indicator is on the bottom. By increasing the span between the indicators, the accuracy of the readings usually can be increased, although bar sag may also increase. Zero both indicators at this position.

2. Rotate both shafts, preferably in the direction of normal rotation, and record the indicator readings at 90-degree intervals. For consistency, right and left readings should be designated for both shafts looking from the pump end towards the motor end. Both indicators should read zero at 360 degrees. If not, zero indicators and retake readings. It is very important to record whether a reading is positive or negative and to keep track of each value's sign while performing the addition and subtraction in the following steps.

3. To correct for bar sag, add twice the actual amount of sag to the bottom readings.

4. Subtract the top reading from the corrected bottom reading and the left reading from the right reading; then divide the differences by 2. These values will be used for plotting the position of the shafts.

Plot Data.—

1. Two graphs will be needed (figure 13)—one for the horizontal plane (top view) and one for the vertical plane (side view). The horizontal scale of both graphs will represent the horizontal distance from the plane of the pump indicator to the plane of the rear motor feet. Since the pump shaft will not be moved, it will be used as the horizontal reference in determining the position of the motor shaft. The vertical scale will represent the misalignment of the motor shaft.

Reverse Indicator Alignment Worksheet

		Column 1 Actual Reading	Column 2 Correction to Bottom Reading for Bar Sag (Twice Actual Amount)	Column 3 Column 1 + Column 2	Column 4 Bottom - Top Right - Left	Column 5 O 1/2 Column 4 Distance of Motor Shaft Line from Pump Shaft Line	Column 6 IDirection of Motor Shaft Line from Pump Shaft Line Circle Direction Corresponding to Sign of Valvue in Column 5
Pump Indicator	Bottom						+ Above - Below
	Top	0	0				
	Right		0				+ Left - Right
	Left		0				
	Top						
Motor Indicator	Bottom	0					+ Below - Above
	Top		0				
	Right		0				+ Right - Left
	Left		0				
	Top						

1. Zero indicators with pump indicator at top position and motor indicator at the bottom. (Pump indicator is indicator nearest pump)
2. Left and right for both indicators is determined by looking form pump end towards motor end.
3. The second top reading for the pump indicator and the second motor reading for the motor indicator should be zero. If not repeat all readings.

Indicator Bar Sag = _____ A = _____ B = _____ C = _____

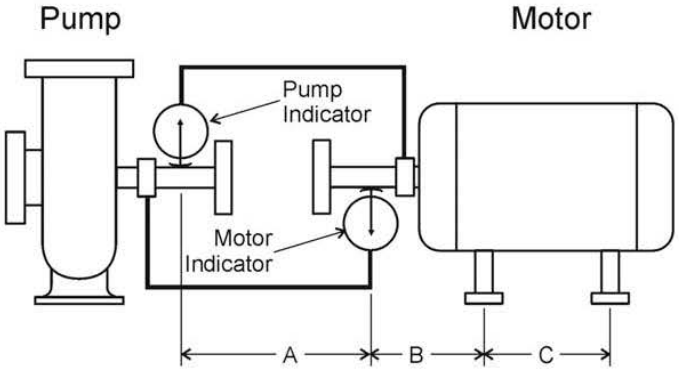

Figure 11.—Reverse indicator alignment worksheet.

Reverse Indicator Alignment Worksheet

		Column 1 Actual Reading	Column 2 Correction to Bottom Reading for Bar Sag (Twice Actual Amount)	Column 3 Column 1 + Column 2	Column 4 Bottom - Top Right - Left	Column 5 O 1/2 Column 4 Distance of Motor Shaft Line from Pump Shaft Line	Column 6 (Direction of Motor Shaft Line from Pump Shaft Line Circle Direction Corresponding to Sign of Valvue in Column 5
Pump Indicator	Bottom	12	+2	-10	-10	-5	+ Above - Below
	Top	0	0	0			
	Right	-5	0	-5	+2	+1	+ Left - Right
	Left	-7	0	-7			
	Top	0					
Motor Indicator	Bottom	0	+2	+2	+12	+6	+ Below - Above
	Top	-10	0	-10			
	Right	-4	0	-4	+2	+1	+ Right - Left
	Left	-6	0	-6			
	Top	0					

1. Zero indicators with pump indicator at top position and motor indicator at the bottom. (Pump indicator is indicator nearest pump)

2. Left and right for both indicators is determined by looking form pump end towards motor end.

3. The second top reading for the pump indicator and the second motor reading for the motor indicator should be zero. If not repeat all readings.

Indicator Bar Sag = 0.001" A = 16" B = 4" C = 40"

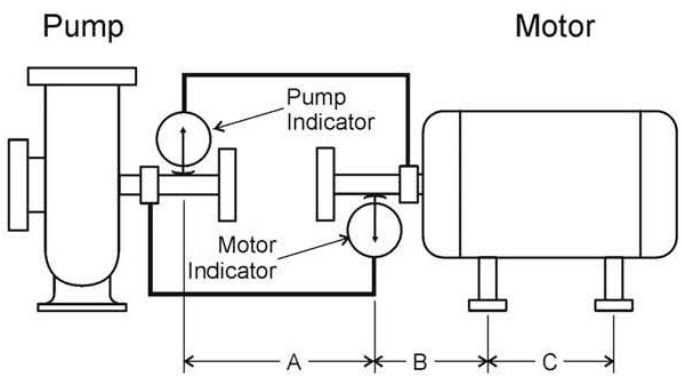

Figure 12.—Reverse indicator alignment worksheet (example).

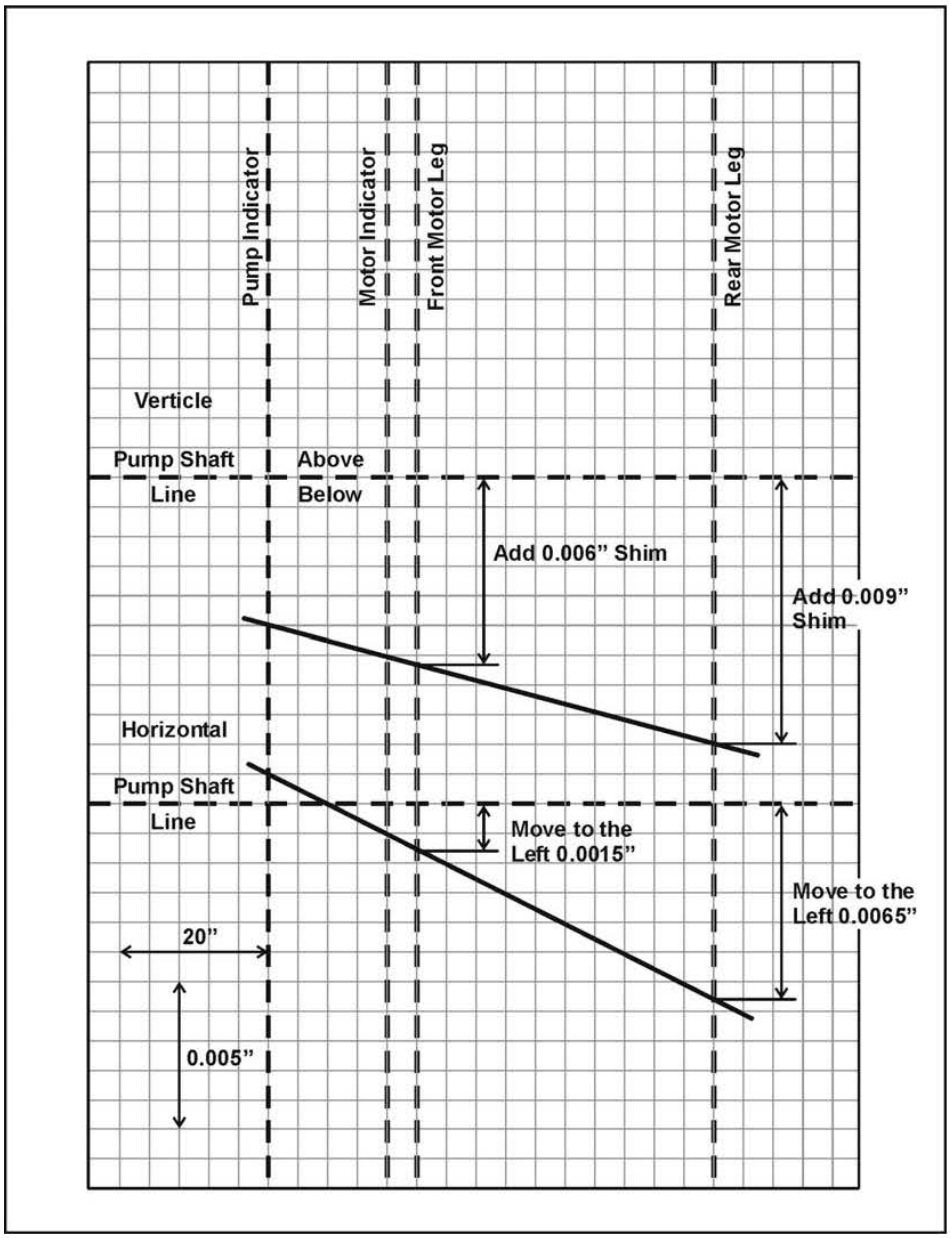

Figure 13.—Reverse indicator alignment plot.

2. Establish the horizontal scale, marking with vertical lines the relative position of both indicators and the front and rear motor feet. Draw two horizontal lines representing the pump shaft reference line for the horizontal and vertical planes. A vertical scale of 0.001 inch per division is usually satisfactory.

3. Plot the values from "Record Indicator Readings," step 4, above. These values represent the vertical distance from the pump shaft line to the motor shaft line at each of the indicator locations. The top-bottom readings are used in the vertical plane plot, and the left-right readings are used in the horizontal plane plot. The sign convention is different for the two indicators. If the values for the pump indicator are positive, the plot will be above and left of the pump shaft reference line. The plot will be below and right of the pump shaft reference line for positive motor indicator readings.

4. Draw a line from the pump indicator point through the motor indicator pump point extending to the rear motor feet line. This line represents the position of the motor shaft. The vertical distances from the motor shaft line to the pump shaft line at the two motor feet lines are the required movements of the motor feet to align the motor to the pump. On the vertical plane plot, these distances represent the required amount of shims to be added or removed. On the horizontal plane, these distances represent the amount of lateral movement required at the motor feet.

5. After any shimming or movement of the motor, repeat the readings and plot data to verify the alignment.

2.9 Vibration Monitoring and Analysis

Vibration monitoring and analysis can be a useful part of a preventive or predictive maintenance program. There are a variety of vibration monitoring systems available. Some use permanently mounted sensors to continually monitor vibration levels, while other systems require readings to be taken periodically with hand held sensors. The type of system used depends on the equipment being monitored. The maintenance supervisor should compare the potential benefits of a vibration monitoring system, such as preventing damage and reducing outages, to the overall cost before deciding which system to use or whether to use any system at all.

2.9.1 Proximity Probe Systems

A proximity probe is a noncontacting type sensor which provides a direct current (dc) voltage directly proportional to shaft position relative to the probe. In a hydroelectric powerplant or a large pumping plant, proximity probes are used to measure the main shaft runout on the turbine/generator or pump/motor. A typical proximity probe system uses two probes per guide bearing location, radially mounted and 90 degrees apart. The monitors for the probes are centrally located

and are provided with relays for alarm and shutdown with continuous indication of shaft runout in mils. The optimum alarm and shutdown points will vary from unit to unit. The best way to set these points is experimentally. The runout amplitude should be measured from speed-no-load to full load, noting the normal amplitude of runout as well as the amplitude at any rough zones. If operation in the rough zone is not desirable, the alarm should be set high enough above normal amplitude to prevent nuisance alarms but low enough to indicate when the unit is in the rough zone. If the operation in the rough zone is allowed, the alarm point should be set above the maximum amplitude observed at any load. The shutdown point, if one is desired, should be set high enough to prevent nuisance tripping but low enough to prevent damage to the machine. A timer or deadband circuit may be required to avoid alarms as the unit passes through rough zones.

2.9.2 Accelerometer Systems

There is a number of accelerometer-based vibration monitoring systems available, varying greatly in complexity and capability. Accelerometers are lightweight vibration sensors that, as the name implies, provide an electrical output proportional to the acceleration of the vibration of the machine being checked. Although accelerometers are available that can measure low frequency vibration (less than 5 hertz [Hz]), they primarily are used for higher frequency vibrations such as 1,800-rotations-per-minute (rpm) electric motors. Accelerometers are generally ineffective for use on slow speed equipment such as hydroelectric units, since the primary frequencies are low and the critical measurement is displacement.

Depending on the system, accelerometers may be mounted permanently, handheld, or attached with a magnetic base. A common method of using accelerometers in a predictive maintenance program is to take periodic readings at different points on each machine. The data from these readings are usually stored in a portable recording instrument and downloaded to a computer. This data then must be analyzed and compared to previous readings to determine if there is a significant increase in the vibration levels, indicating an impending failure.

2.9.3 Signature Analysis

A common means of analyzing vibration data is through using a spectrum plot (figure 14). A spectrum plot is an X-Y plot where the X-axis represents the vibration frequency, usually in cycles per minute or cycles per second (hertz); and the Y-axis represents vibration amplitude in acceleration, velocity, or displacement units. A spectrum plot features amplitude spikes or peaks corresponding to operating frequencies of components of the equipment being tested. The initial plot provides a "signature" of the vibration for that particular piece of equipment. An increase in the amplitude of vibration at any of the various frequencies or the appearance of a new spike in subsequent plots may indicate an operational problem or impending failure.

24-JUN-91 Palomar Technology Page 1

SINGLE SPECTRUM PLOT

SET: POWER GENERATION TYPE: FFT DATE: 08-NOV-90 13:01:32
POINT ID: TEST DESC:
WINDOW: HANNING LINES: 400 AVER: 1 FREQ: 0 - 10000 CPM
DETECT: PEAK TO PEAK RPM: 1800 THRESHOLD: 0.1000 UNITS: mils

FREQ: 0.00 AMP: 0 ORDER: 0.000 DEG: ---

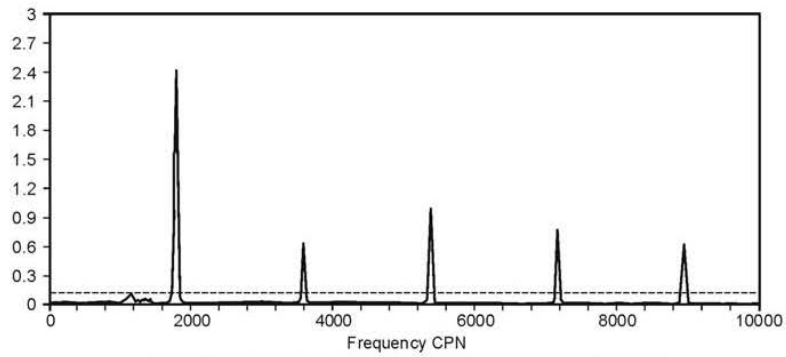

IDENTIFICATION OF SPECTRAL PEAKS ABOVE THRESHOLD

NO.	AMP.	FREQ.	ORDER	NO.	AMP.	FREQ.	ORDER
1.	0.1349	25.0	0.014				
2.	2.3978	1800.0	1.000				
3.	0.6228	3575.0	1.986				
4.	0.9849	5375.0	2.986				
5.	0.7759	7175.0	3.986				
6.	0.6270	8950.0	4.972				

SPECTRAL ENERGY SUMMARY

OVERALL	SYNC	SUBSYNC	NONSYNC
3.049	2.908	0.2776	0.8761

Figure 14.—Single spectrum plot.

A signature analysis program can be helpful in scheduling outages for bearing replacement on small motors and pumps. The amplitude of vibration at the bearing pass frequency will increase as an antifriction bearing starts to fail. Signature analysis is also a good tool for hydroelectric units. Spectrum plots from proximity probes at each of the guide bearings can be used to diagnose problems such as misalignment, unbalance, or draft tube surging. To be effective with hydroelectric units, spectrum plots should be taken frequently since vibration levels will vary with the water level of the forebay and tailrace. Subsequent readings then can be compared to readings under the same operating conditions.

To perform a vibration analysis, a basic understanding of the characteristics of machine vibration and some knowledge of use of the test equipment is required. Training is available from many of the manufacturers of vibration monitoring systems.

2.10 Oil and Lubricants

The primary purpose of a lubricant is to reduce friction and wear between two moving surfaces, but a lubricant also acts as a coolant, prevents corrosion, and seals out dirt and other contaminants. In order for a lubricant to perform as intended, careful attention must be given to its selection and application as well as its condition while in use. FIST Volume 2-4, *Lubrication of Powerplant Equipment*, provides more information on lubricants and their use. The equipment manufacturer should provide specific information on the lubricant type and on the periodic recommended maintenance for a particular application.

2.10.2 Oil Lubrication

Oil lubrication can take many forms—from a simple squirt oil can to a complex circulating system. Regardless of the method by which the oil is applied, the intent is the same, which is to keep a lubricant film between moving surfaces. For successful lubrication, it is critical that the proper oil be chosen, properly applied, and kept clean and uncontaminated.

While it is beneficial to have as few types of oil in stock as possible, there is no one all-purpose oil that can be used in all applications. Various additives, such as emulsifiers, rust and corrosion inhibitors, detergent, and dispersants, are added to oil to enhance performance for a given application. Characteristics that may be desirable in one case may be very undesirable in another. For example, emulsifiers are added to motor oil to allow the oil to hold water in an emulsion until the engine's heat can boil it away. In bearing lubrication, where there is not sufficient heat to evaporate the water, the oil must be capable of readily separating from water.

2.10.3 Grease Lubrication

Grease is a lubricant consisting of a lubricating oil combined with a thickening agent. The base oil makes up 85–95 percent of the grease and performs the actual lubrication. The thickening agent, usually some type of soap, determines many of the characteristics of a grease, such as heat resistance, water resistance, and cold weather pumpability. Various additives may also be added to improve performance.

Overheating and subsequent failure of grease lubricated bearings caused by over lubrication is a common problem. The idea that more is better, coupled with the fact that it usually is difficult to determine the actual amount of grease in a bearing housing, causes many bearings to be "over greased."

Ideally, a grease-lubricated bearing should be "packed" by hand so that the bearing housing is approximately one-third full of grease. When grease is applied using a grease gun, the relief plug, if so equipped, should be removed so that, as the new grease is applied, all of the old grease is purged from the bearing housing. The unit should be operated approximately 30 minutes before the plug is replaced

to allow excess grease to escape. If the bearing housing doesn't have a relief plug, grease should be added very infrequently to prevent over lubrication.

Many of the soap bases used in making grease are incompatible. Mixing two different types of grease many times will result in a mixture inferior to both of the component greases. As a general rule, different greases should not be mixed. If it becomes necessary to change the type of grease used on a piece of equipment, the bearing housing should be disassembled completely and cleaned thoroughly to remove all the old grease. If this is not possible, as much of the old grease as possible should be flushed out by the new grease during the initial application; and the greasing frequency should be increased until it is determined that all of the old grease has been purged from the system.

In wicket gate greasing systems and other underwater applications, a grease must be chosen that is water resistant, somewhat adhesive, and has extreme pressure characteristics, as well as being pumpable. A grease that is impervious to water and has excellent lubricating qualities is useless if it doesn't get to the bearing. The consistency must be thin enough to be pumped through the grease lines but thick enough to stay in the bearings once it is there. Some compromise in the desired qualities is required to obtain a workable grease.

2.10.4 Hydraulic Oil

The main purpose of a hydraulic oil is to transmit power, but it also must lubricate the components of the hydraulic system. In many systems, a lubricating oil such as turbine oil can be used as the hydraulic fluid. If the system uses a gear pump, operates at pressures less than 1,000 psi and has similar viscosity requirements, a turbine oil can function very well as a hydraulic oil. In systems that operate over 1,000 psi or use a piston or sliding vane pump, a fluid with an antiwear additive usually is required. Where the system operates in an area of great temperature extremes, such as gate operators, an oil with a high viscosity index might be required to provide desirable high and low temperature viscosity characteristics.

2.10.5 Testing and Filtering

Cleanliness is extremely important. All seals should be installed and in good condition. Dirt, water, or other contaminants not only can cause premature wear of the bearings and hydraulic system components but they also can cause the depletion of some of the oil's additives.

Laboratory tests should include viscosity, water content, total acid number, particle count, and elemental analysis for wear metals and additives. A Rotating Pressure Vessel Oxidation Test, which is a test to determine the oil resistance to oxidation and an indication of the condition of the oxidation inhibitor in the oil, should be done periodically as well; but this test is not required as part of the regular testing schedule. Based on the initial testing, other tests may be recommended by the laboratory. The tests usually can be accomplished by any laboratory equipped for lubricant testing; but preferably, the tests should be performed by someone knowledgeable in the use and formulation of the

lubricants being tested. Since the composition and additive content of oils usually is considered proprietary information, the manufacturer may have to be contacted to determine the extent of additive depletion. The manufacturer should also be contacted anytime the tests indicate there is some question about the continued serviceability of an oil.

The tests should be performed at least annually and more frequently if a problem is suspected or previous tests have indicated an impending problem. In any testing program, it is important to keep complete and accurate records of the tests. A significant change in any of the measured properties from previous tests may indicate a problem, although the oil still may be acceptable for service.

The oil from large bearings periodically should be drained and filtered and the oil reservoir thoroughly cleaned. The most efficient method of determining when to filter is through the results of the oil tests. Filtering more frequently than is necessary is a waste of time, while waiting too long to filter the oil will shorten the oil's life and damage the equipment being lubricated.

The oil from small bearings should be drained periodically, and the reservoir or case cleaned and filled with new oil. Care should be taken when filling a bearing oil reservoir so as not to under or over fill. In many cases, over filling an oil reservoir can cause as much damage as an underfilling.

Another possible source of contamination is the mixing of incompatible oils. Similar oils made by different manufacturers for the same service may be incompatible because of different additives in the oils. The additives may react with one another, causing a depletion of these additives and leaving the oil unable to perform as it was intended.

Another possible incompatibility problem is the change in the type of base oil used by many manufacturers, or more accurately, the type of refining process used to process the base oil. Until the mid-1990s, most base oil stock was refined by the solvent refining process. This process uses solvents to remove some of the impurities of the crude oil. Solvent-refined base oils are commonly referred to as Group I oils. In the mid-1990s, many manufacturers started using base oils that are refined by hydrocracking. This process adds hydrogen at high temperatures and pressures to remove impurities and change the molecular structure of some of the molecules. Oil refined by hydrocracking is referred to as Group II oil. Group II oil is a purer oil that offers better thermal and oxidation stability, lower toxicity, increased biodegradability, improved low temperature flow, and generally a longer life than a comparable Group I oil. Because of the superior characteristics, most oil companies are changing over to Group II base oils for their turbine oil formulations.

The Group I and Group II base oils themselves are not necessarily incompatible, but the additive packages used in the oil may very well be incompatible. An example of this incompatibility occurred at a U.S. Army Corps of Engineers plant. In this case, the existing Group I oil was replaced by a Group II oil. The original oil used an antifoaming additive that was silicone based. The silicon-

based additive is easily held in solution in a Group I base oil but will not dissolve in a Group II base oil. When the new Group II oil was put in service, the antifoaming additive in the residual Group I oil precipitated out of solution and coated everything in contact with the lubricant. If the mixing occurs in a bearing housing or governor sump, the precipitate will coat bearing surfaces, clog filters and valves, and will likely require at least partial disassembly to clean. If the mixing occurs in a storage tank, the entire volume of oil in the tank may be contaminated and, at a minimum, require an extensive reclaiming process to make the oil acceptable for use.

It is difficult to determine if two different oils are compatible. American Society for Testing and Materials (ASTM) D7155-06 *Standard Practice for Evaluating Compatibility of Mixtures of Turbine Lubricating Oils* provides procedures for testing mixtures of different turbine oils. It is recommended that, any time new oil is added or oil is changed out, the tests of this standard be performed. As the tests can be somewhat costly, only testing mixtures in the ratios that are expected to be encountered are recommended.

Even if tests show that two different oils are compatible, it is always prudent to check the oil more frequently if a different makeup oil is used. The oil and bearing should be checked for signs of foaming, precipitate, or overheating. If a system is converted to a different lubricant, it is recommended that the entire system be cleaned and thoroughly flushed before the new lubricant is added. ASTM Standard D 6439-99, *Standard Guide for Cleaning, Flushing, and Purification of Steam, Gas, and Hydroelectric Turbine Lubrication Systems*, provides guidance for flushing bearing systems.

2.11 Inspection Checklist

Turbines and Large Pumps

Equipment	Recommended Interval	Reference
1. Turbine Runner/Pump Impeller	Annual, Not Scheduled	Reclamation Practice
2. Spiral Case, Draft Tube/ Pump Casing, Suction Tube	Annual, Not Scheduled	Reclamation Practice
3. Wearing Rings	Annual, Not Scheduled	Reclamation Practice
4. Main Shaft Packing	Weekly, Not Scheduled	Reclamation Practice
5. Mechanical Seals	Weekly, Not Scheduled	Reclamation Practice
6. Wicket Gates, Facing Plates	Annual, Not Scheduled	Reclamation Practice
7. Servomotors, Wicket Gate Linkage	Annual, Not Scheduled	Reclamation Practice
8. Unit Bearings	Daily, Annual, Not Scheduled	Reclamation Practice
9. Shaft and Coupling	Annual	Reclamation Practice

Turbines and Large Pumps (continued)

Equipment	Recommended Interval	Reference
10. Generator /Motor	Annual	Reclamation Practice
11. Generator Air Coolers	Annual, Not Scheduled	Reclamation Practice
12. Unit Brakes	Monthly, Annual	Reclamation Practice
13. Generator Carbon Dioxide (CO_2) System	Semiannual, Annual	Reclamation Practice
14. Inspection Reports	Annual	Reclamation Practice

Auxiliary Pumps

Equipment	Recommended Interval	Reference
15. Pump Impeller	Annual, Not Scheduled	Reclamation Practice
16. Shaft and Coupling	Weekly, Annual	Reclamation Practice
17. Packing	Weekly, Not Scheduled	Reclamation Practice
18. Mechanical Seals	Weekly, Not Scheduled	Reclamation Practice
19. Bearings	Weekly	Reclamation Practice
20. Pressure Relief Valves	Annual	Reclamation Practice
21. Eductors	Not Scheduled	Reclamation Practice

Important: It is recognized that many plants perform major maintenance on a biennial or triennial basis based on maintenance history and the number of units. Many of the tasks listed here as annual are actually performed during the major maintenance periods. Extending the interval is acceptable as long as proper documentation exists to support the variance.

2.11.1 Hydraulic Turbines and Large Pumps

1. *Runner or Impeller*

   Annual. Examine runner or impeller thoroughly for cavitation or other damage. Use a nondestructive test, such as dye-penetrant testing, to check for cracks in runner buckets or impeller vanes. Fill out appropriate runner inspection form, PO&M 160, 161, 162, or 163. These forms can be found on Reclamation's Intranet site at http://intra.usbr.gov/forms/pomforms.html. Refer to FIST Volume 2-5, *Turbine Repair*, for repair recommendations and techniques.

   Not Scheduled. Remove runner or impeller and inspect and repair areas not normally accessible.

2. *Spiral Case and Draft Tube or Pump Casing and Suction Inlet*

   Annual. Check condition of interior coating and repair as required. Weld repair cavitation damaged areas of draft tube liner. Inspect riveted and welded joints for leaks and corrosion and repair as required. Check mandoors for leaks and condition of door hinges. The draft tube or suction tube liner should be checked for voids between the liner and the concrete and grouted if necessary. Any leaks between the concrete and the spiral case, pump casing, draft tube, or suction tube should be monitored. If excessive or if an increase is noted, the source of the leak should be found and repaired. The spiral case is considered a pressure vessel, and the repair procedure must take this into account.

   Not Scheduled. If the condition of interior coating is such that spot repairs are no longer effective, sandblast and repaint the entire surface. Draft tube liners severely damaged by cavitation may be repaired by cutting out the damaged area and welding the plates in place that have been rolled to the proper diameter.

3. *Wearing Rings*

   Annual. Check top and bottom wearing ring clearances at four points, 90 degrees apart. Compare to the design clearance and previous readings. If clearance is approaching 200 percent of design clearance, schedule wearing ring replacement.

   Not Scheduled. Remove runner or impeller and replace or renew wearing rings when clearance exceeds 200 percent of design clearance. In some cases, wearing rings that are an integral part of the runner, impeller, or the casing may be built up by welding and being remachined. Replaceable wearing rings, in most cases, should not be built up by welding, as the heat of welding can induce stresses or distort the rings. If the wearing rings are replaced, the stationary rings should be supplied with an undersized inner diameter and bored concentric to the center of the unit.

4. *Main Shaft Packing*

   Weekly. Check flow and pressure of packing cooling water. Check for excessive heat and for leakage past the packing. Tighten the packing gland as leakage becomes excessive and grease the packing box if and when required.

   Not Scheduled. Remove old packing and lantern ring and thoroughly clean packing box. Check packing sleeve for excessive wear and repair as required. Install new packing, staggering adjacent rings so that joints do not coincide.

5. *Mechanical Seals*

   Weekly. Check for excessive leakage. Follow manufacturer's recommendations for lubrication during extended outages. When excessive leakage does occur, it normally is an indication that new seals are required.

Not Scheduled. Disassemble seal and thoroughly clean seal components and shaft sleeve. Check shaft sleeve for excessive wear and repair as required. Replace segments or other components as required.

6. *Wicket Gates and Facing Plates*

Annual. Measure clearance between gates at the top, middle, and bottom with feeler gauges with gates closed and the servomotor pressure released. Check clearance between wicket gates and upper and lower facing plates. Compare to previous readings and design clearances. Check gates and facing plates for cavitation damage, corrosion, or other damage. Repair or repaint as required. Check leakage past packing and tighten as required. Automatic greasing systems should be checked for leaks, crushed or damaged piping, and fittings. Run greasing system through complete cycle, noting operating pressure and cycle time. Make sure each lubrication point is getting grease.

Not Scheduled. Disassemble and check wicket gate bushings, thrust washers, stems, and packing sleeve for wear or corrosion. If bushings are out of tolerance, replace and line bore, making sure the bushings are bored concentric and plumb. Check upper and lower facing plates for scoring, corrosion, or other damage and repair as required. Take measurements to verify that facing plates are level and parallel to one another. If necessary, replace facing plates or machine existing plates level and parallel to one another. Measure height of wicket gate and compare it to the distance between the upper and lower facing plates. If out of tolerance, build up wicket gates ends and machine back to specified dimensions. Check gate-to-gate sealing surfaces and build up and remachine as required. Replace shaft packing.

7. *Servomotors, Shift Ring, and Wicket Gate Linkage*

Annual. Observe servomotor, shift ring, and wicket gate linkage as it is moved through its full range of motion in both directions. Look for any lateral movement of shift ring indicating worn bearing pads and for any backlash in the wicket gate linkage. Check for leakage past servomotor packing glands and tighten as required. Check servomotor shaft for scoring and repair or schedule repairs as required. Verify the existence of "cushioning" on the end of the closing stroke. Adjust as necessary. Review records for shear pin replacement for the preceding year. If there is an abnormally high number of broken shear pins for no apparent reason (i.e., no trash or other debris in scroll case), visually inspect pins for signs of fatigue or check for cracks with ultrasonic equipment. The fatigue life usually is fairly consistent; so if several show signs of fatigue and the pins are of the same vintage, schedule replacement of all pins. If pins are failing prematurely, check amount of squeeze on the wicket gates by the procedure in section 4.1, of FIST Volume 2-3, *Mechanical Governors for Hydroelectric Units.*

Not Scheduled. Disassemble and check condition of shift ring bearing pads and wicket gate linkage bushings and pins. Replace if out of tolerance. Disassemble servomotors and check pistons and cylinder for scoring or signs

of misalignment and realign as required. Bore or polish scored cylinder and renew piston by sleeving or other method. Replace piston rings. Check servomotor shaft for scoring and repair by machining and hard chrome plating or other method if necessary. Replace packing as required.

8. *Bearings*

Weekly. Check the bearing temperature and lubricant level. Check flow and pressure of cooling water. Check flow and pressure of turbine guide bearing oil pump.

Annual. Take oil sample from all bearings, preferably while unit is running some time before a scheduled outage. If it is not possible to obtain samples with unit running, samples should be taken immediately after shutdown while the oil is still hot. Laboratory tests should include viscosity, water content, total acid number, particle count, and elemental analysis for wear metals and additives as a minimum. Based on the results of the oil tests, the oil should be drained and filtered. If oil tests are not performed, the oil should be filtered annually.

If easily accessible, check bearing clearances with dial indicators and by "jacking" the shaft or with feeler gauges. Runout readings taken with proximity probes at each bearing may be substituted for bearing clearance readings if taken consistently. Changes in runout readings can be a good indication of bearing health. Any change in previous readings should be investigated. Calibrate temperature sensors and oil level indicators. Check operation of alternating current (ac) and dc turbine guide bearing and thrust bearing high-pressure lubrication system oil pumps. Note operating pressure of high-pressure lubrication system and investigate if it is significantly different from previous readings. Check filters on high-pressure lubrication system and clean or replace as required.

Check the generator thrust bearing and upper guide bearing insulation with an ohmmeter following the procedure in FIST Volume 3-11, *Generator Thrust Bearing Insulation and Oil Film Resistance.* If resistance is low, investigate cause immediately.

Not Scheduled. Remove bearings and check for any damage. Light scoring and other minor damage can be removed by scraping babbitt bearings. If there is severe damage to the babbitt surface, the bearing should be rebabbitted.

Remove cooling coils and clean out any deposits. Hydrostatic test coils for several hours to check for leaks before reinstalling. Check normally inaccessible portions of thrust bearing high-pressure lubrication system for leaks or broken hoses.

9. *Shaft and Coupling*

Annual. Check shaft runout with dial indicator or with proximity probes and a strip chart recorder or data acquisition system. At minimum, check runout

at full load and, if possible, record the runout as the unit is loaded from speed-no-load to full load. Make note of the maximum runout magnitude and the load at which it occurred. Investigate if runout is excessive or has changed significantly from previous readings.

10. *Generator or Motor*

Annual. Thoroughly inspect stress carrying parts of rotor for cracks. Pay particular attention to welds on the rotor spider. Any cracks should be evaluated by engineering personnel, and a repair procedure should be developed. Check bolted connections for tightness and any evidence of movement. Check stator frame for loose connections, cracks, or other damage. Check stator air gap at a minimum of four positions, top, and bottom.

11. *Air Coolers*

Annual. Clean exterior surfaces of coils and check for leaks.

Not Scheduled. Check interior of coils for excessive scale buildup. If scale is excessive, clean mechanically or with an approved chemical treatment. Perform a hydrostatic test after cleaning to check for leaks.

12. *Unit Brakes*

Monthly. Check condition of brake air line filters and lubricators. If lubricator is not installed, operate unit jacks to lubricate brake cylinders.

Annual. Measure brake shoe thickness and check condition of brake ring. Operate brake cylinders to check for any binding or sticking. If necessary, disassemble brake cylinders and repair.

13. *Generator CO_2*

Monthly. Check electrical control circuits and indicating lights. Weigh all CO_2 cylinders and replace cylinders in which the CO_2 content weighs less than 90 percent of the weight marked on the cylinder by the supplier.

Annual. Check CO_2 system by disconnecting the detonators of all except those CO_2 cylinders that are under test and operate the actuating contacts by hand to release CO_2 into the generator housing. Observe for proper operation and for leaks in the system and generator housing. CO_2 cylinders that are being removed because of loss of weight may be used for this test. All CO_2 cylinders must be discharged and then hydrostatically tested by qualified suppliers every 12 years. Any cylinder that has been discharged and that has not been hydrostatic tested within 5 years must be hydrostatic tested before refilling.

14. *Inspection Reports*

Inspection reports detailing what work was performed during an inspection should be filled out annually to record data obtained during the annual

inspection. PO&M 190 (Hydraulic Turbines) and PO&M 191(Large Pumps) can be found on Reclamations Intranet at http://intra.usbr.gov/forms/pomforms.html.

2.11.2 Auxiliary Pumps

15. Impeller or Rotor and Casing

Annual. Check for leaks from casing at gasketed joints and tighten or replace gaskets as required. Take ammeter readings of pump motor with pump at full capacity. A decrease in amperage indicates a decrease in pump output, which suggests some maintenance is required.

Not Scheduled. Disassemble the pump if there is a reduction in capacity or pressure, an increase in vibration or other indication that a problem exists, or disassemble the pump at intervals determined by past maintenance experience. Check for worn parts and repair or replace as required.

16. Shaft and Coupling

Weekly. Visually check shaft and coupling for excessive runout or vibration. Look for loose coupling bolts or other damaged coupling components. Lubricate if required.

Annual. Check shaft runout with dial indicator or with proximity probes. Check shaft alignment if runout is excessive.

17. Packing

Weekly. Check for excessive heat and for proper amount of leakage. Tighten packing as required.

Not Scheduled. Remove old packing and lantern ring and thoroughly clean packing box. Check packing sleeve for excessive wear and repair or replace as required. Install new packing, staggering adjacent rings so that joints do not coincide.

18. Mechanical Seals

Weekly. Check for excessive leakage. When excessive leakage does occur, it normally is an indication that new seals are required.

19. Bearings

Weekly. Check for vibration and for adequate lubrication. Prior to complete failure, vibration will increase; and the bearing will usually become extremely noisy. As it is sometimes difficult to detect an increase in noise or vibration, some sort of vibration monitoring system can be helpful. If a bearing fails prematurely, determine the cause and correct it before restarting the pump. Insufficient or excessive lubrication, contamination of the lubricant, or misalignment of the shaft or bearings are some possible causes of premature bearing failure.

20. Pressure Relief Valves

Annual. All positive displacement pumps, such as in hydraulic systems, must have a pressure relief valve installed in its discharge line ahead of any valve or obstruction that could restrict flow. In some pumps, the relief valve is an integral part of the pump. Test all relief valves for proper operation and setting.

21. Eductors

Not Scheduled. Disassemble and clean any scale or rust buildup from nozzle, eductor body, and piping. Repair or replace nozzle if damaged by corrosion or cavitation.

THIS PAGE INTENTIONALLY LEFT BLANK

3. Penstocks, Outlet Pipes, Piping, Gates, and Valves

3.1 Penstocks, Outlet Pipes, Lines, and Piping

Penstocks and outlet pipes are steel, concrete, or, in some cases, wood stave water conduits. Penstocks and outlet pipes may be embedded entirely or partially in concrete, placed under ground, or carried on suitable supports above ground or in a tunnel. A penstock is conduit that conveys water from a reservoir, forebay, or other source to a hydraulic turbine in a hydroelectric powerplant. An outlet pipe is a conduit that conveys water from a reservoir for irrigation, run of the river, municipal or industrial water supply, or other purposes. Both penstocks and outlet pipes may have expansion joints, manholes, drain and fill lines, and other accessories which require periodic maintenance.

Many of the penstocks and outlet pipes in Reclamation facilities are over 40 years old. Besides periodic inspections and maintenance, the condition of these conduits should be evaluated as to their safety. Due to corrosion and other factors, a penstock or outlet pipe no longer may be safe for water hammer conditions that may occur during a load rejection or closure of an outlet valve. Reclamation's FIST Volume 2-8, *Inspection of Steel Penstocks and Pressure Conduits*, provides useful information and engineering techniques for the assessment of all types of pipes and should be consulted in setting up an evaluation program.

The auxiliary piping systems, except for the painting of their exterior surfaces, many times are ignored until leaks or other problems occur. Although a leak may be just an isolated event, frequently it can be an indication of the entire system's condition. By monitoring a system's condition, repair or replacement can be scheduled, preventing an unscheduled outage. Determining the condition of a piping system can be difficult. Partial disassembly can provide a good indication of the condition of the system but may damage the piping or valves. Radiographs or X-rays are nondestructive and provide a permanent record of the pipe wall thickness and the amount of mineral deposits or corrosion products built up in the pipe. Other nondestructive tests such as ultrasonic also can determine pipe wall thickness.

3.2 Gates and Valves

3.2.1 General

There are numerous types of gates and valves installed in Reclamation powerplants and dams. Figures 15, 16, and 17 illustrate some common gate and valve layouts. A gate or valve's primary purpose is to regulate flow or to act as a secondary shutoff. The following definitions are taken from the *Handbook of Applied Hydraulics*, Third Edition:

Gate.—A gate is a closure device in which a leaf or closure member is moved across the fluidway from an external position to control the flow of water.

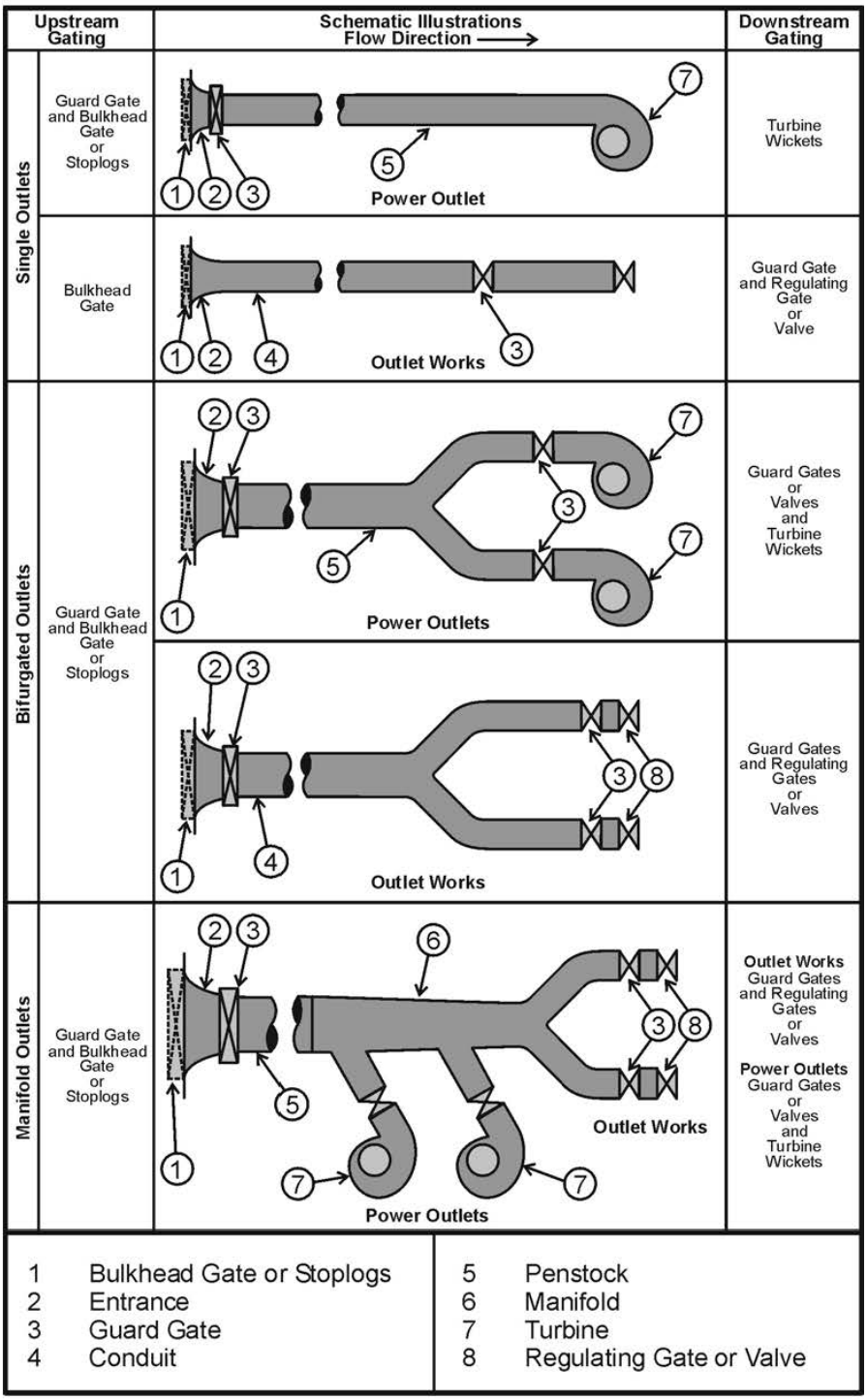

Figure 15.—Common gate and valve arrangements.

Type	Schematic Illustrations Flow Direction →	Notes and Comments
Tower Intake (Rectangular Gate)	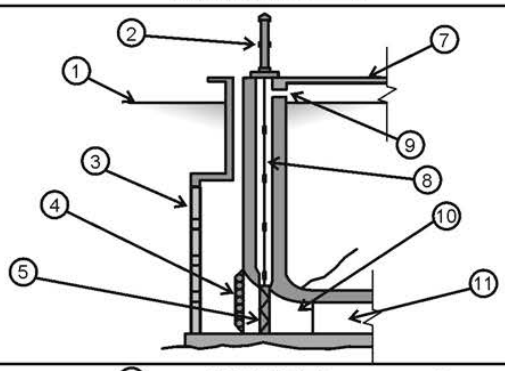	Tower intakes are used principally on earth dams where abutments are not suitable for intake structures. Also used for concrete dams where intakes must be located on abutments and other types are not suitable. Basic arrangement is similar to vertical abutment intake. Bridge is usually provided to dam or abutment.
Tower Intake (Cylinder Gate)	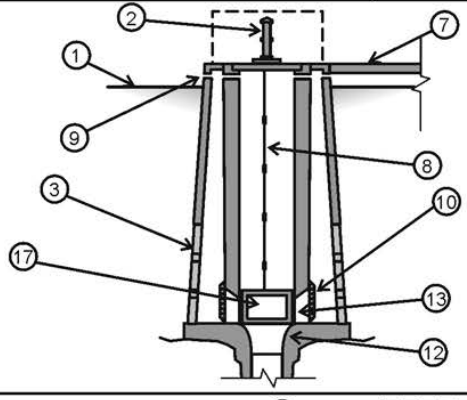	Tower intakes used primarily where intake entrance is vertical. Other selection factors are similar to those stated above for rectangular gates.
Shaft Intake (Submerged Upstream)	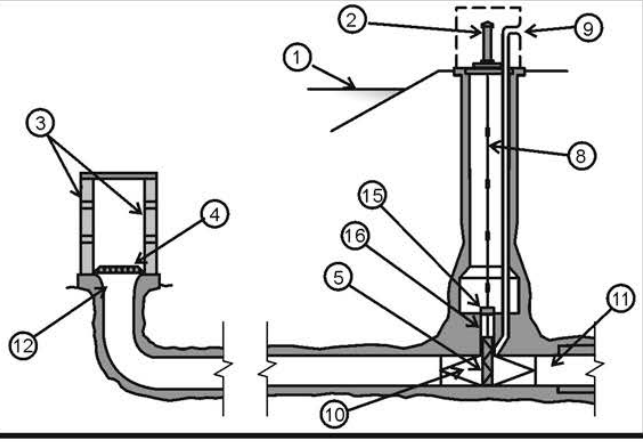	Intake arrangement used principally on earth dams. Shaft usually located near axis of dam, either in dam or abutment. Abutment location is preferable to avoid joint between abutment rock and dam fill. Intake bulkhead installation requires drawing reservoir down or placement from a barge and the employment of divers.

1	Reservoir Water Surface	10	Transition
2	Hoist	11	Pipe
3	Trash Rack	12	Bellmouth
4	Bulkhead Gate	13	Radial Entrance
5	Wheel or Roller Mounted Gate	14	Intake Structure
6	Hoist	15	Bonnet Cover
7	Bridge to Dam or Abutment	16	Steel Encasement
8	Hoist Stem Sections	17	Cylinder Gate
9	Air Vent		

Figure 16.—Intake arrangements.

FIST 4-1A Maintenance Scheduling
for Mechanical Equipment

Type	Schematic Illustrations Flow Direction →	Notes and Comments
Vertical Intake on Dam or Abutment	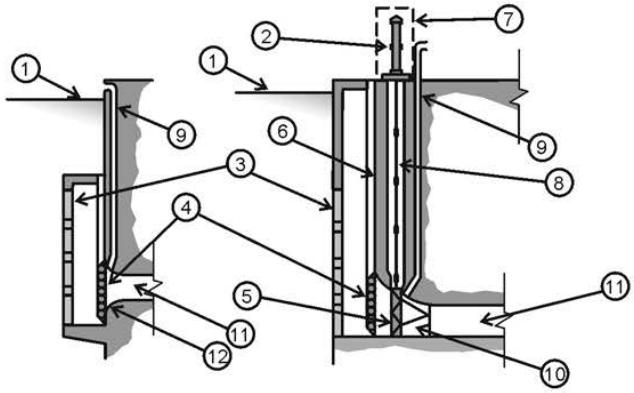	Intake types are used principally on concrete dams and on earth dams with abutment intakes. Type A used primarily for single line outlet works. Type B used for all types of power outlets and for branched and manifold type of outlet works.
Small Slope Intake on Dam	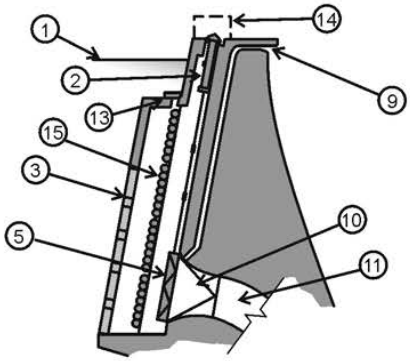	Type of intake frequently used on thin arch concrete dams. Used for all types of power outlets and for branched and manifold outlet works. Gantry crane is usually provided for handling gate and stoplogs for multiple outlet installations.
large Slope Intake on Abutment	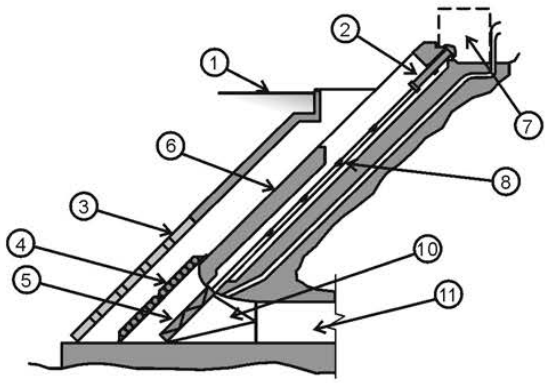	Intake used mainly for abutment intakes on earth dams. Hoist stems must be provided with support wheels. Reduction in effective weight for gravity closing may require the provision of closing thrust by hoist, or the use of roller-mounted gates

1	Reservoir Water Surface	9	Air Vent
2	Hoist	10	Transition
3	Trash Rack	11	Pipe
4	Bulkhead Gate	12	Bellmouth
5	Wheel or Roller Mounted Gate	13	Slot Cover
6	Curtain Wall	14	Removable Cover
7	Hoist House	15	Stoplogs
8	Hoist Stem Sections		

Figure 17.—Intake arrangements.

Valve.—A valve is a closure device in which the closure member remains fixed axially with respect to the fluidway and is either rotated or moved longitudinally to control the flow of water.

Guard Gates or Valves.—Guard gates or valves operate fully open or closed and function as a secondary device for shutting off the flow of water in case the primary closure device becomes inoperable. Guard gates usually are operated under balanced-pressure no-flow conditions, except for closure in emergencies.

Regulating Gates and Valves.—Regulating gates and valves operate under full pressure and flow conditions to throttle and vary the rate of discharge.

Bulkhead Gates.—Bulkhead gates usually are installed at the entrance, are used to unwater fluidways for inspection or maintenance, and nearly always are opened or closed under balanced pressures.

Stop Logs.—Stop logs are installed in the same manner and perform the same function as bulkhead gates. A stop log may be considered as a section of a bulkhead gate which has been made of several units to permit easier handling.

3.2.2 Gates

Closure or regulating devices meeting the above definition of "gates" appear in a variety of forms. The more common types are discussed in the following sections.

1. *Radial or Tainter Gates*

   Radial gates (figure 18) or tainter gates, as they also are called, are used primarily as spillway crest gates but are also used in canals or other open channel applications. A radial gate basically consists of a skinplate, shaped like a cylindrical section, connected to radial arms which converge to a horizontal pivot pin. The gate is raised or lowered usually by a wire rope or chain and sprocket hoist.

2. *Slide Gates*

   Slide gates, in their various configurations, may be used as guard or regulating gates for closed, high-pressure conduits, such as penstocks and outlet works, or for open channel flow such as canals. The construction of a slide gate can vary a great deal. The cast iron slide gate consists of a flat or rectangular leaf that is moved within a frame over a circular or rectangular opening. The leaf is connected to a hoist by a stem which is supported by guides attached to the concrete above the opening. High-pressure gates and outlet gates are also slide gates. They consist of a leaf, a body and bonnet embedded in concrete, and some type of hoist for raising and lowering the leaf. Since slide gates usually seal downstream, the downstream mating surfaces between the leaf and the body act as bearing and sealing surfaces. Figure 19 shows an outlet works slide gate.

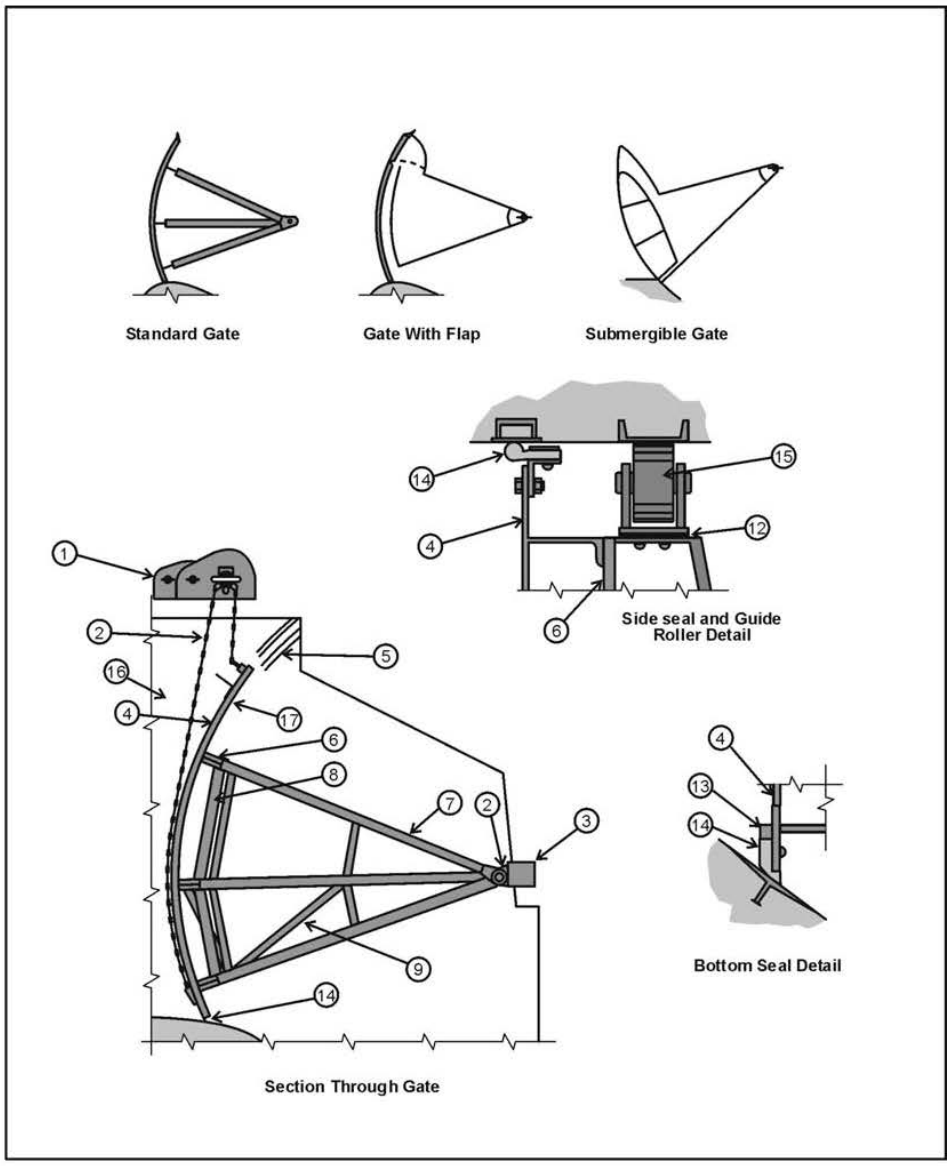

1	Hoist	10	Trunnion Pedestal
2	Hoist Chain	11	Trunnion Anchorage
3	Wave Deflector	12	Shim
4	Skin	13	Backing Bar
5	Sealing and Guiding Surfaces	14	Rubber Seal
6	Horizontal Girder	15	Guide Roller
7	Radial Arm	16	Pier
8	Horizontal Girder Brace	17	Vertical Rib
9	Radial Arm Brace		

Figure 18.—Radial gates.

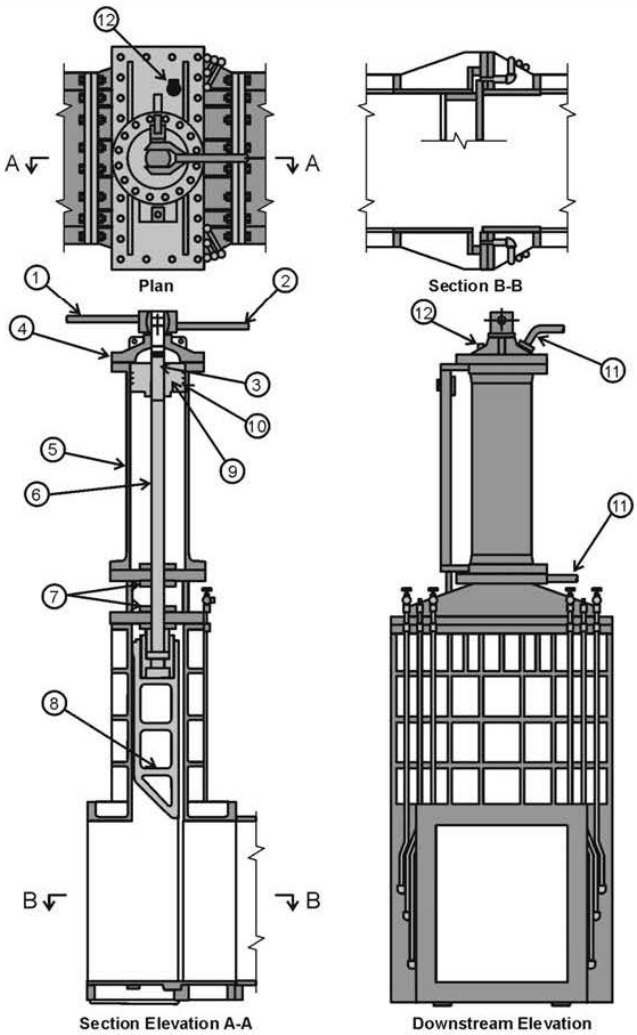

1	Hanger Stud Lever (Open)	6	Gate Stem
2	Hanger Stud Lever (Closed)	7	Packing Glands
3	Gate Hanger Stud (Mechanically holds gate open when engaged)	8	Gate Leaf (Open)
4	Upper Cylinder Head	9	Piston
5	Cylinder	10	Piston Rings
		11	Oil Pipe Connection
		12	Vent Valve

Figure 19.—Slide gate.

3. *Wheel- and Roller-Mounted Gates*

   Wheel-mounted (fixed wheel gates) and roller-mounted (coaster gates) gates consist of a flat structural steel gate leaf with a roller system or a series of wheels fixed to the leaf to transfer the hydraulic load from the gate to tracks imbedded in concrete. These gates are used as spillway gates or as the primary guard gate for a penstock or outlet conduit. Depending on the application, the hoist for the gate may be a hydraulic cylinder or some type of a mechanical hoist. Figures 20 and 21 show typical installations.

4. *Jet Flow Gates*

   Jet flow gates are used strictly for water regulation through outlet conduits. A jet flow gate is similar to a slide gate consisting of a leaf, a body, a bonnet, and a hoist to position the leaf. The outlet of the gate is circular in cross section, rather than square or rectangular as a slide gate, with a conical nozzle upstream of the gate. This nozzle produces a contracted, jet type discharge that jumps over the gate leaf slot. Figure 22 shows a jet flow gate.

5. *Ring-Follower Gates*

   Ring-follower gates are used as guard gates for penstocks or outlet conduits and are not suitable for water regulation. A ring-follower gate is a slide gate with a leaf, body, bonnet, and a hoist, which is usually a hydraulic cylinder, to move the leaf. The ring-follower gate leaf consists of two parts: the bulkhead part which blocks the fluid flow in the closed position and the "ring" portion, which has a circular opening matching the diameter of the penstock or conduit, to provide a unobstructed water passage in the open position. A ring-follower gate is shown in figure 23.

6. *Ring-Seal Gates*

   Ring-seal gates are a type of ring-follower gate with a movable seal and a wheel- or roller-mounted gate leaf. The gate seal is hydraulically actuated by water pressure, either from the conduit or an external source, and may be located in the housing or the leaf. The hoist may be mechanical or a hydraulic cylinder. Ring-seal gates are shown in figures 24 and 25.

7. *Bulkhead Gates and Stop Logs*

   Bulkhead gates and stop logs are installed under balanced, no flow conditions and are used to allow the unwatering of a waterway such as an outlet pipe, penstock, or turbine draft tube. In the case of outlet pipes and penstocks, they are placed as far upstream as possible to allow the complete unwatering of the waterway and provide access to gates or valves in the waterway. Bulkhead gates and modern stop logs are both constructed of structural steel with rubber seals and are virtually identical in appearance. Stop logs are differentiated from bulkhead gates in that they employ more than two sections and, when all the sections are installed, extend above the reservoir surface. Bulkhead gates are made up of one or two sections and only cover the entrance to the

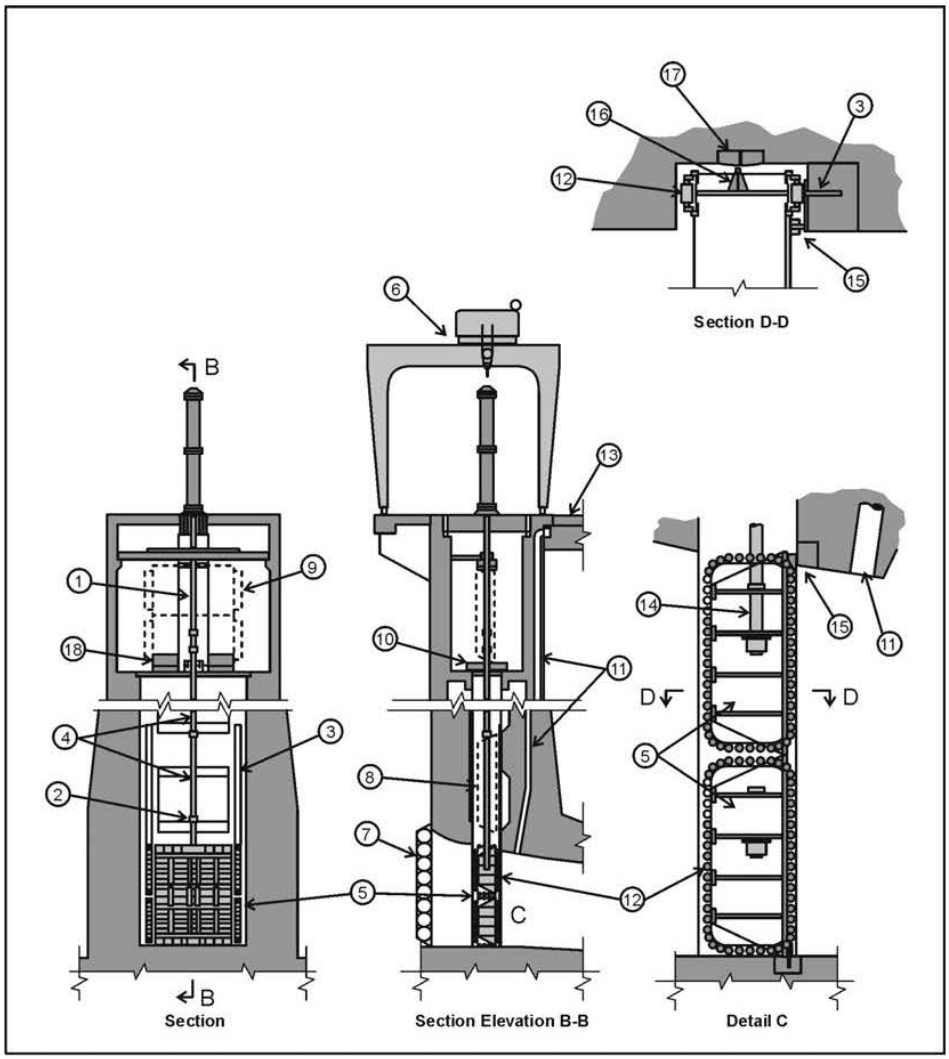

1	Hoist Stem	10	Stem Handling Beam
2	Couplings	11	Air Vent
3	Roller Track	12	Roller Train
4	Intermediate Stems	13	Bridge to Abutment
5	Roller Mounted Gate	14	Gate Stem
6	Gantry Crane	15	Seal Assembly
7	Bulk head Gate	16	Guide Bracket
8	Gate in Open Position	17	Guide Track
9	Gate in Erection or Servicing Position	18	Erection Beam

Figure 20.—Roller-mounted gate (coaster gate).

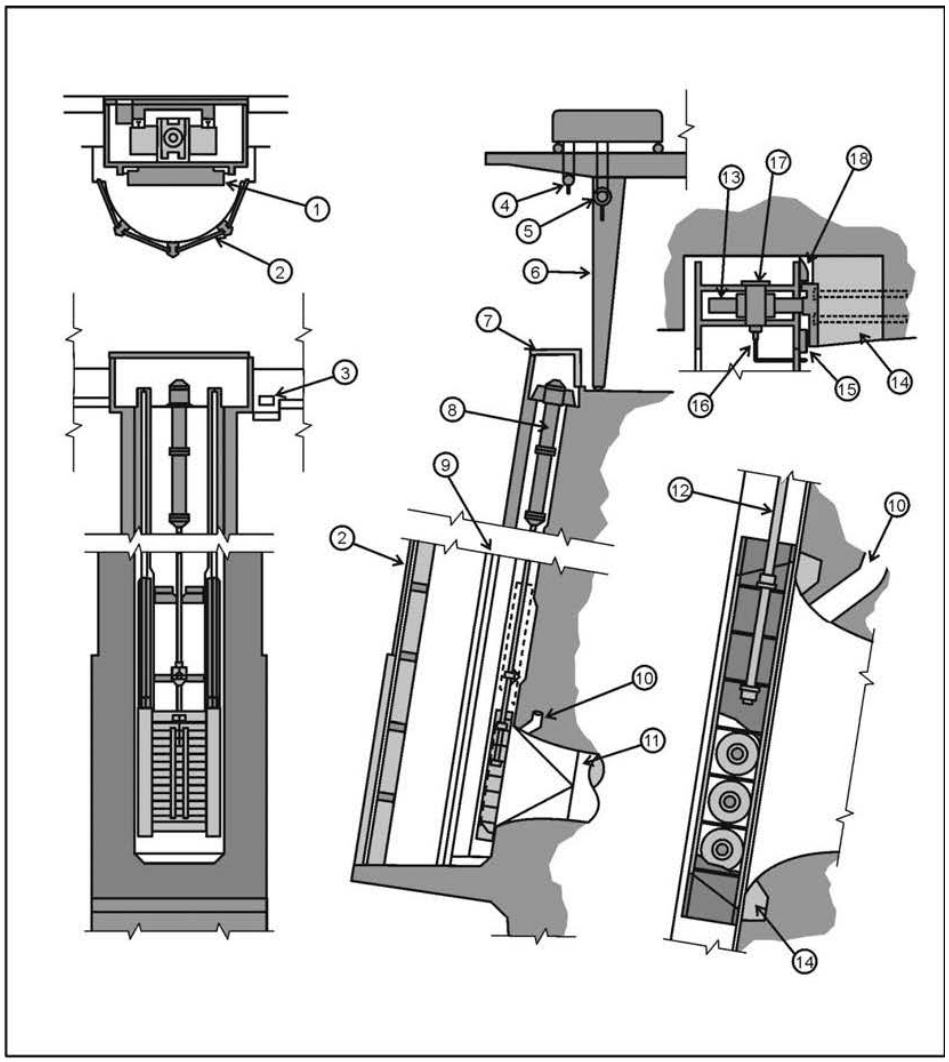

1	Stoplog Opening	10	Air Vent
2	Trash Racks	11	Pipe
3	Air Vent Intake	12	Hoist Stem
4	Stop Log Hook	13	Wheel
5	Gate Hook	14	Block Out
6	Gantry Crane	15	Seal Assembly
7	Removable Cover	16	Grease Fitting
8	Hydraulic Hoist	17	Axel
9	Stop Log Slot	18	Guide Bracket

Figure 21.—Wheel-mounted gate (fixed wheel gate).

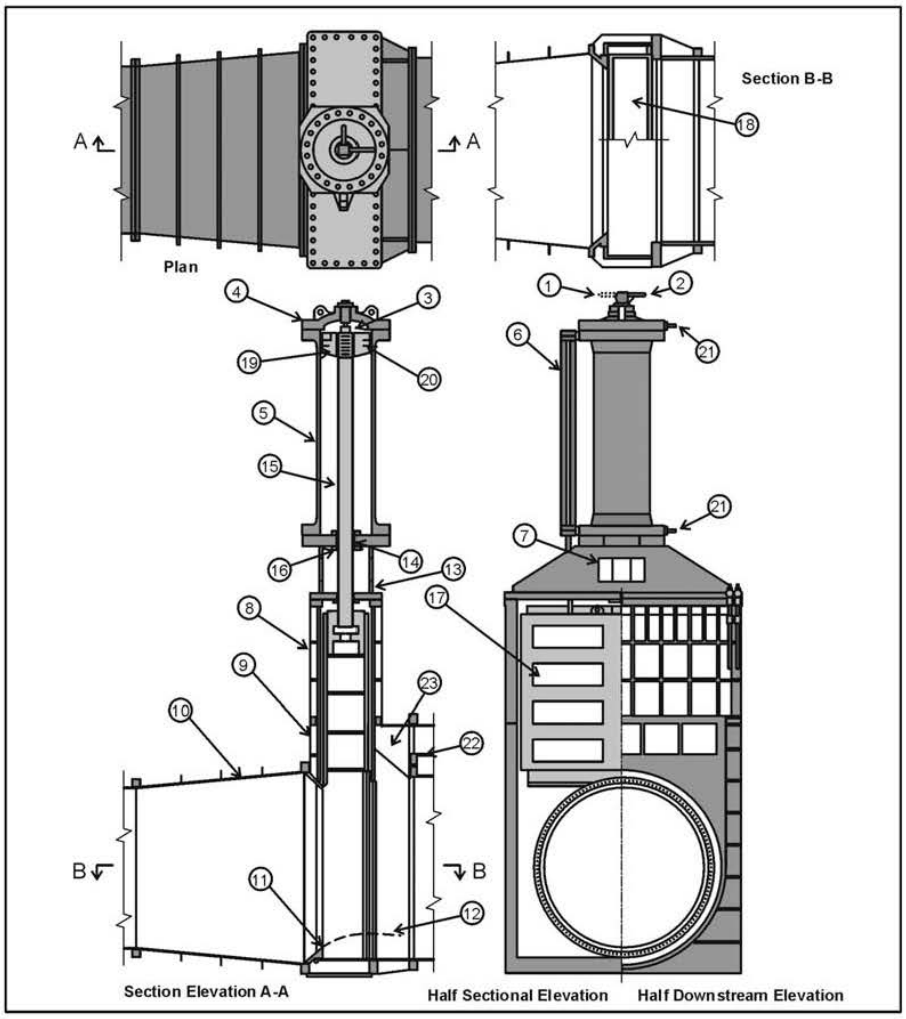

1	Hanger Stud Lever (Engaged)	12	Jet Flow Boundary
2	Hanger Stud Lever (Disengaged)	13	Bonnet Cover
3	Gate Hanger Stud (Mechanically holds gate open when engaged)	14	Vee Packing
		15	Gate Stem
4	Upper Cylinder Head	16	Packing Gland
5	Cylinder	17	Gate Leaf (Open)
6	Gate Position Indicator	18	Gate Leaf (Closed)
7	Access to Stuffing Boxes	19	Piston
8	Upstream Bonnet	20	Piston Rings
9	Upstream Body	21	Oil Pipe Connection
10	Conical Diffuser	22	Air Vent Conduit
11	Jet Spring Point	23	Air Vent Manifold

Figure 22.—Jet flow gate.

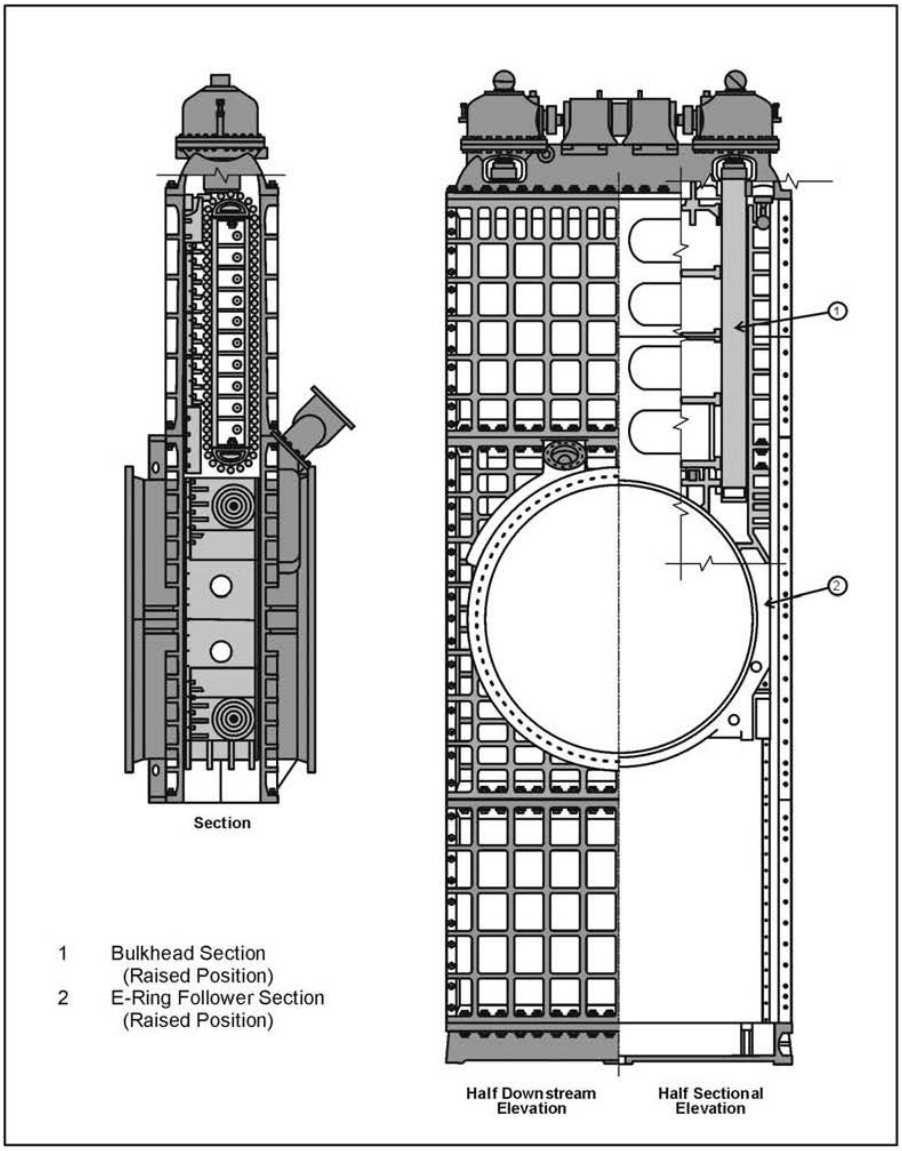

Figure 23. Ring-follower gate.

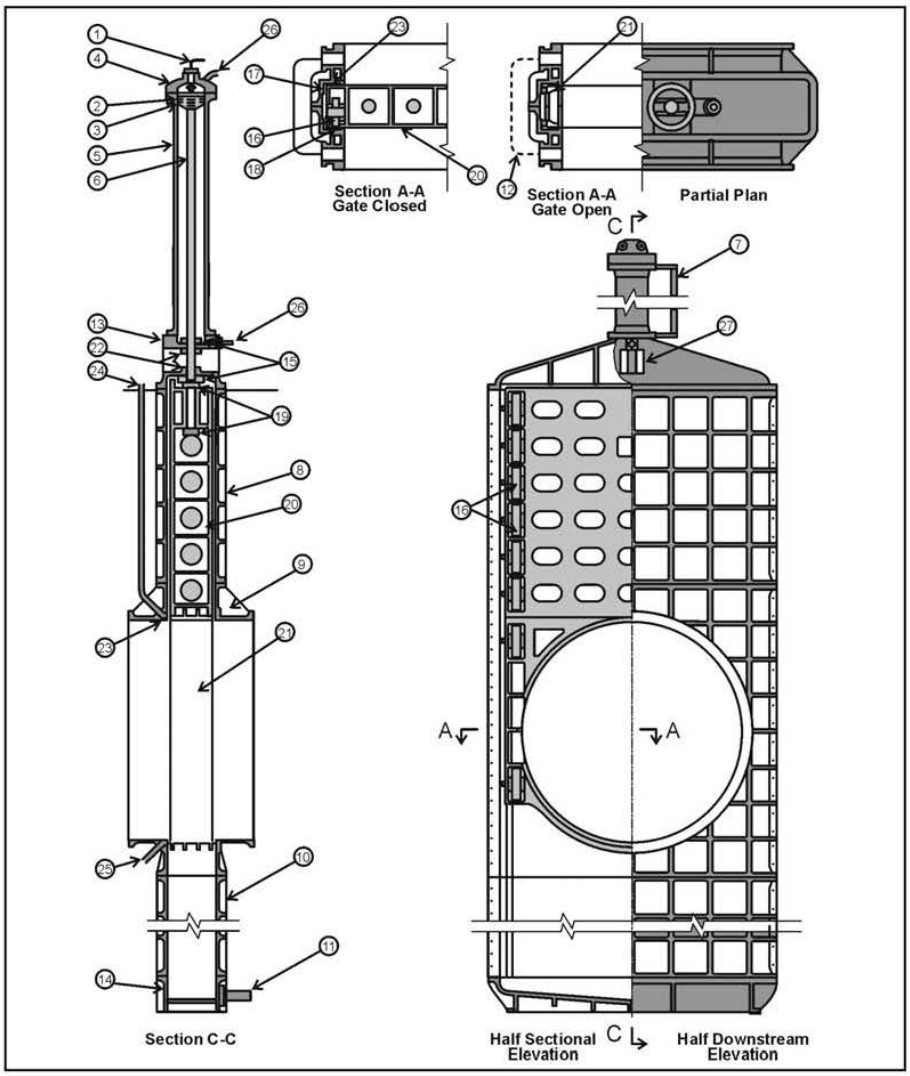

1	Latch Release Piston	14	Lower Bonnet Cover
2	Piston	15	Vee Packing
3	Piston Rings	16	Wheels
4	Cylinder Head	17	Guides
5	Cylinder	18	Track
6	Gate Stem	19	Stem Nuts
7	Position Indicator	20	Leaf (Bulkhead Section)
8	Upper Bonnet	21	Leaf (Follower Section)
9	Body	22	Packing Glands
10	Lower Bonnet	23	Seal Assembly
11	Drain and Sediment Flushing Pipe	24	Seal Water Pressure Line
		25	Seal Drain and Flushing Assembly
12	By-pass Line	26	Oil Pipe Connection
13	Upper Bonnet Cover	27	Access Opening for Stuffing Boxes

Figure 24.—Ring seal gate (hydraulically operated).

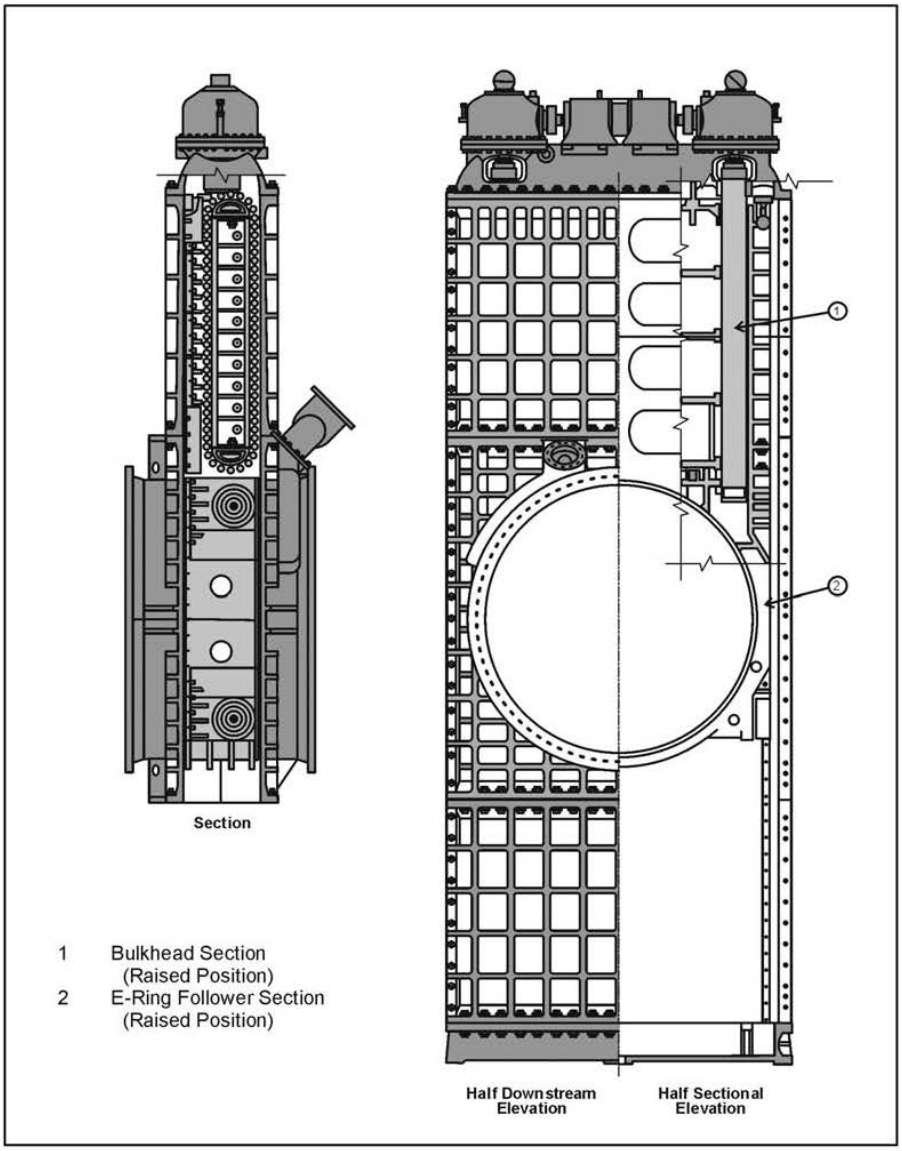

Figure 25.—Ring-seal gate (mechanically operated).

waterway. Bulkhead gates and stop logs usually are installed with a gantry or mobile crane. Figures 26 and 27 show typical bulkhead gate and stop log installations.

3.2.3 Valves

Valves, like gates, can regulate flow or act as guard valves to penstocks and outlet conduits. This section will describe the most common valve types in use in Reclamation facilities.

1. *Tube Valves*

   Tube valves are used primarily as regulating valves in outlet conduits. The tube valve is essentially a needle valve with the downstream needle omitted to eliminate the cavitation damage experienced with normal needle valves. A hollow cylinder or tube is actuated by a mechanical operator to seal against a valve seat on the downstream end of the valve. Like a needle valve, the fluid way converges at the outlet. A tube valve is shown in figure 28.

2. *Hollow-Jet Valves*

   Hollow-jet valves are used as regulating valves and are similar in construction to a tube valve. The closure member of the hollow-jet valve is the needle which moves upstream to seal against its valve seat. The fluid way is not converging so that the discharge is in the shape of a hollow jet. The hollow-jet valve can be operated either hydraulically or mechanically. Figures 29 and 30 are examples of hollow-jet valves.

3. *Butterfly Valves*

   Butterfly valves most commonly are used as guard valves on penstocks and outlet conduits. They normally are used for flow regulation only if the head differential across the leaf is small. The butterfly valve consists of a cylindrical or conical shaped body with a circular leaf, mounted on a horizontal or vertical shaft, perpendicular to the fluidway. An external actuator, usually hydraulic, rotates the leaf 90 degrees to fully open or close the valve. A butterfly valve is shown in figure 31.

3.2.4 Valve and Gate Operators

1. *Threaded Stem Hoist*

   Basically, a threaded stem type hoist consists of a steel, Acme-threaded stem mated to a bronze stem nut. Depending on the application, the stem or the stem nut may be rigidly attached to the gate. In a rising stem type gate, the nut is rotated, and the stem rises with the gate. In some cases, the stem is rotated and the gate rises with the stem nut. In most cases, the hoist is electric motor driven through a system of gears. Ring-seal gates and some jet-flow gates use threaded stem type hoists with twin stems. Threaded stem hoists are shown in figures 32 and 33.

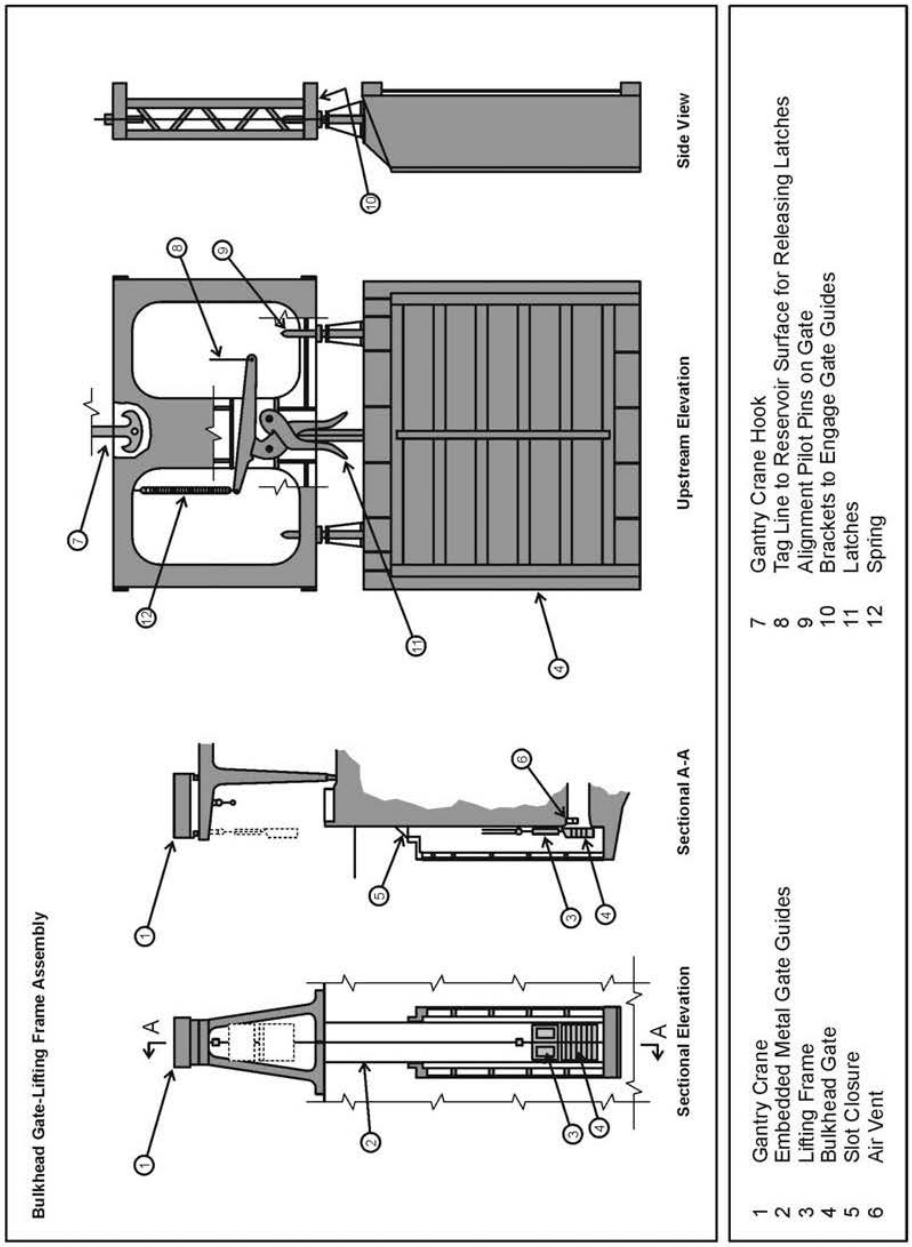

Figure 26.—Bulkhead gate.

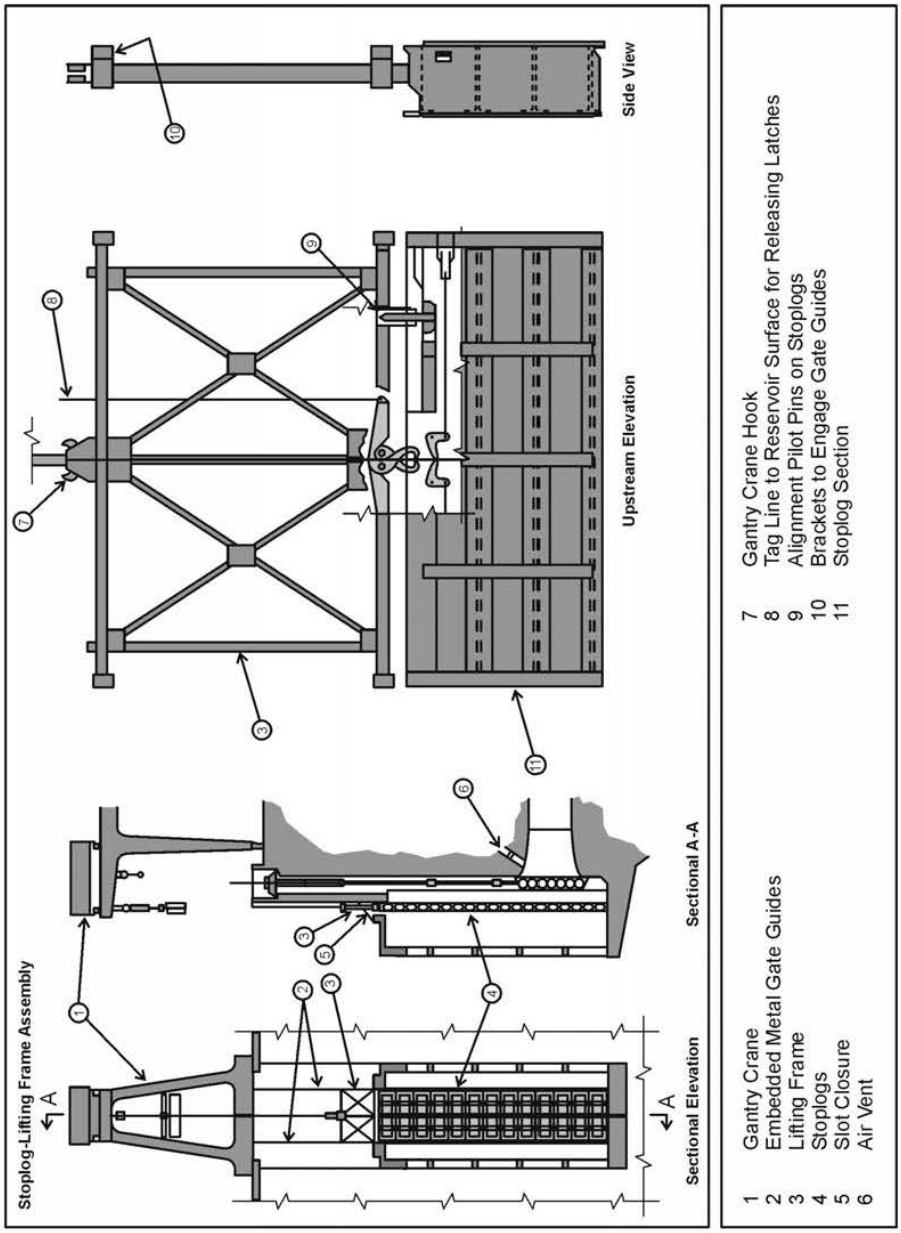

Figure 27.—Stop logs.

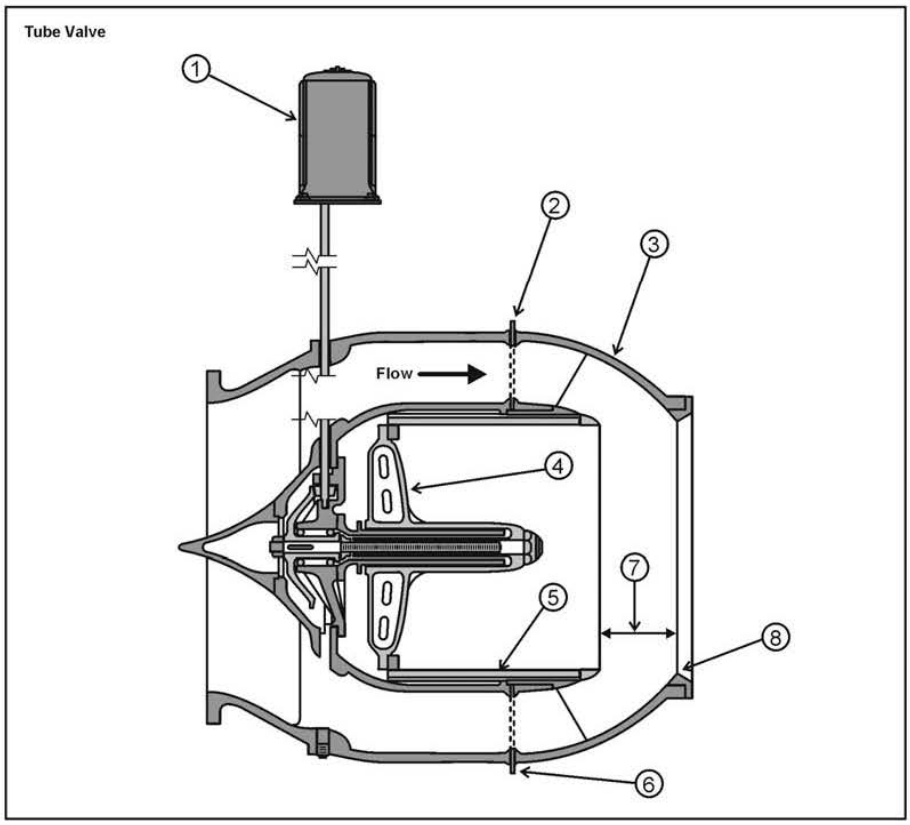

1	Motorized Operator	5	Tube
2	Seal Pressure Control Line	6	Seal Drain Line
3	Body	7	Travel
4	Tube Drive Spider	8	Seat

Figure 28.—Tube valve.

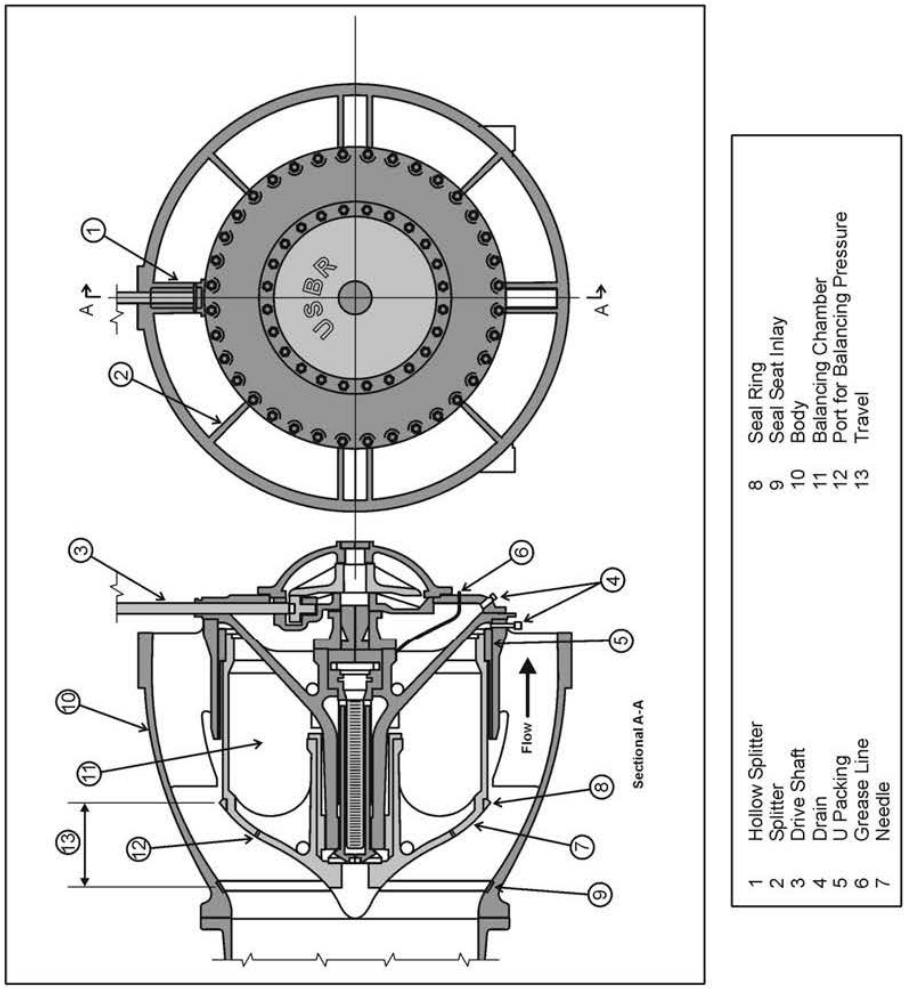

Figure 29.—Hollow jet valve (mechanically operated).

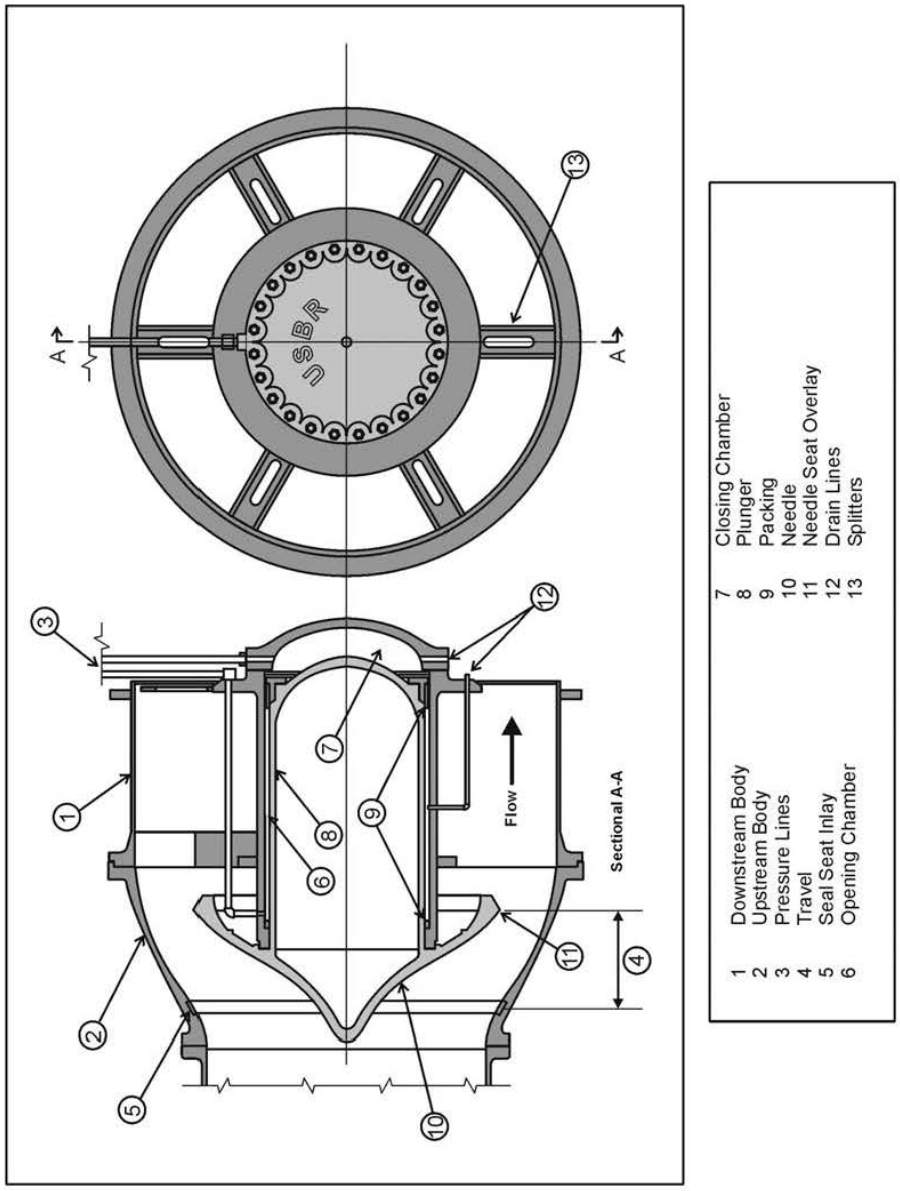

Figure 30.—Hollow jet valve (hydraulically operated).

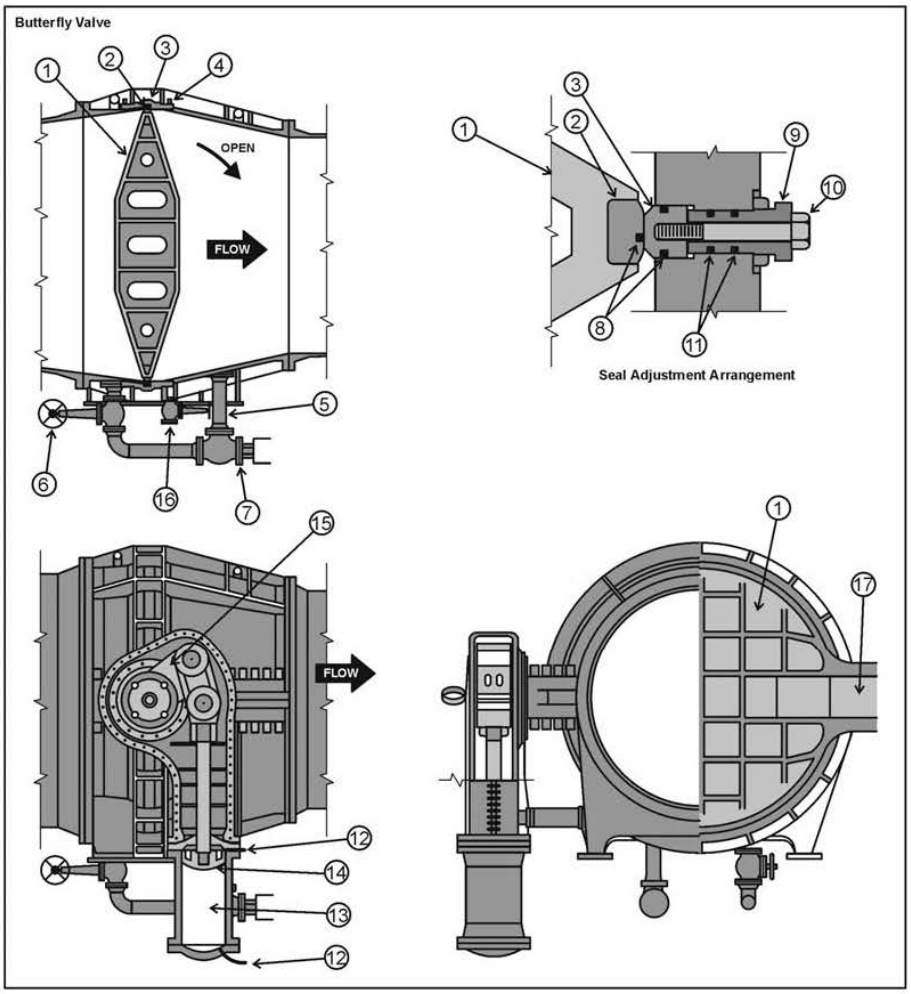

1	Leaf	9	Adjusting Screw
2	Seal	10	Locking Bolt
3	Adjustable Seal	11	O-Rings
4	Vent Valves	12	Oil Pipe
5	Bypass Line	13	Cylinder
6	Guard Valve	14	Piston
7	Service Valve with Manual or Power-Driven Operator	15	Crank (Valve Closed)
		16	Drain
8	Rubber Inserts	17	Stem

Figure 31.—Butterfly valve.

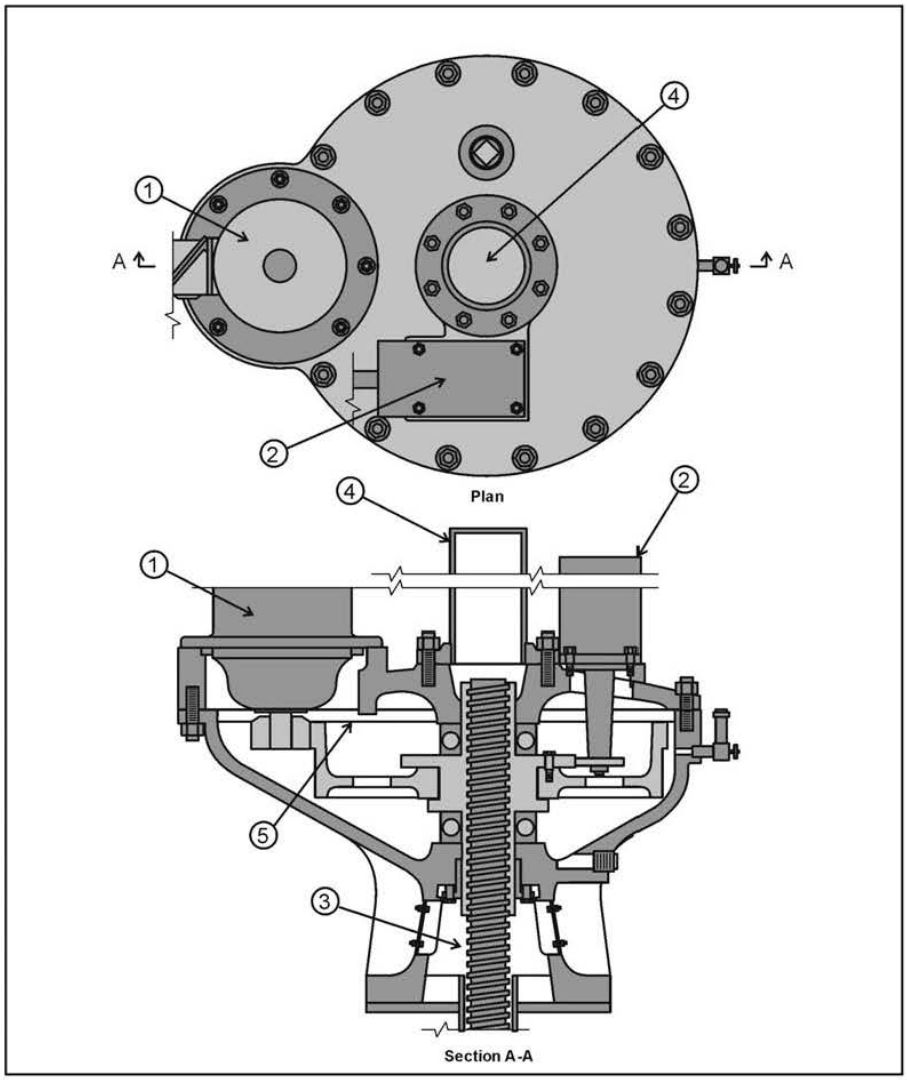

1	Motor	4	Stem Guard
2	Control	5	Oil Level
3	Gate Stem		

Figure 32.—Rising stem gate hoist.

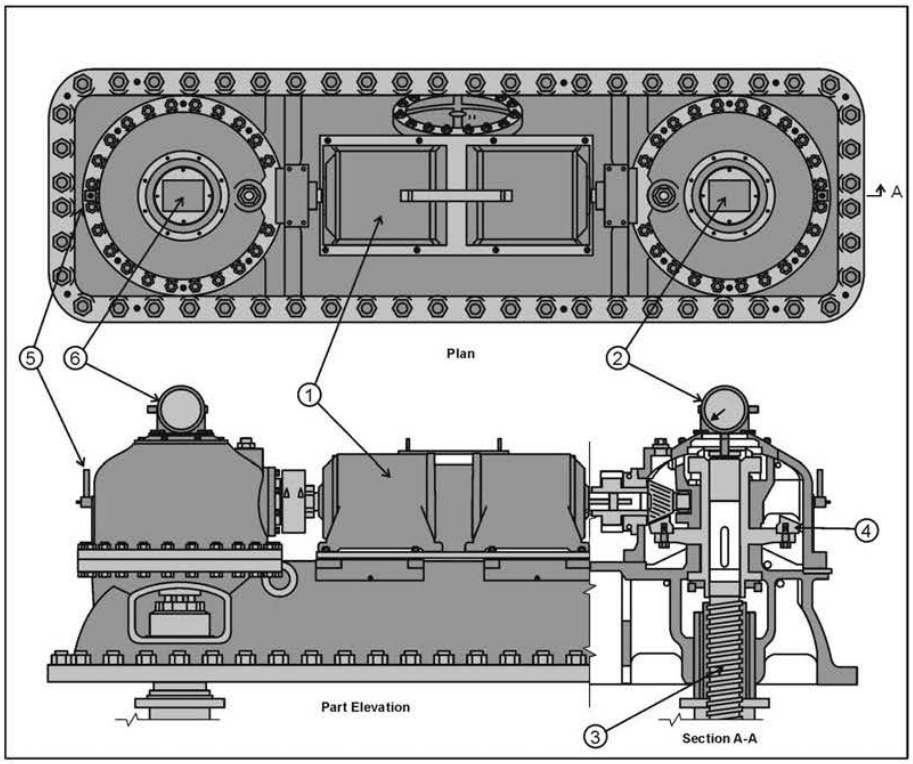

1	Motor	4	Gear
2	Gate Position Indicator	5	Oil Level Indicator
3	Gate Stem	6	Limit Switches

Figure 33.—Twin threaded stem gate hoist (nonrising stem).

2. *Chain and Sprocket Hoist*

   Chain and sprocket hoists are used to raise or lower large gates which are used infrequently. The hoists are powered by an electric motor which drives a reduction unit with two output shafts. The output shafts each drive a hoist unit with reduction gearing, drive sprocket, idler sprocket, and sprocket chain.

   One end of each chain is attached to the gate and the other to a counter weight. A typical chain and sprocket hoist is illustrated in figure 34.

3. *Wire Rope Hoist*

   Wire rope hoists are most commonly used with radial gates. Wire rope hoists normally use two drums driven by an electric motor through reduction gearing similar to the chain and sprocket hoist. A wire rope hoist is shown in figure 35.

4. *Hydraulic Operators*

   Hydraulic operators are used for a variety of gates and valves. Basically, a hydraulic system consists of an oil reservoir; electric motor driven pump; directional, relief, check, flow control, and shutoff valves; filters; and the operator itself, usually a hydraulic cylinder. Many systems use two pumps in parallel to provide a backup should one fail. The operator may be driven in both directions or it may be powered open and allowed to close by gravity. Examples of hydraulic systems are shown in figures 36 and 37, and a hydraulic cylinder is shown in figure 38.

3.3 Guard Gate and Valve Closure Tests

Unbalanced tests of all guard gates and valves are required periodically to verify gate and valve dependability and determine maintenance requirements. While some gates and valves can only be tested under balanced conditions, most should be given a simulated emergency closure test under maximum flow, unbalanced conditions.

These tests ensure that the gates/valves will operate as intended under severe, but controlled, conditions. If the gate/valve fails to operate as intended during these tests, the regulating gate/valve is still available to stop the flow. In an actual emergency situation, such as failure of regulating gate/valve or a ruptured pipe, the guard gate/valve would be the only means of stopping flow.

conditions with no damage, but it is essential that the correct test procedure be followed exactly. The test may require closing the gate/valve under unbalanced conditions or opening the gate/valve 10 percent of its total travel under unbalanced conditions. If there is any doubt about the validity of the test procedure or if a written procedure for a particular gate or valve is not available, contact the Mechanical Equipment Group, 86-68410, immediately.

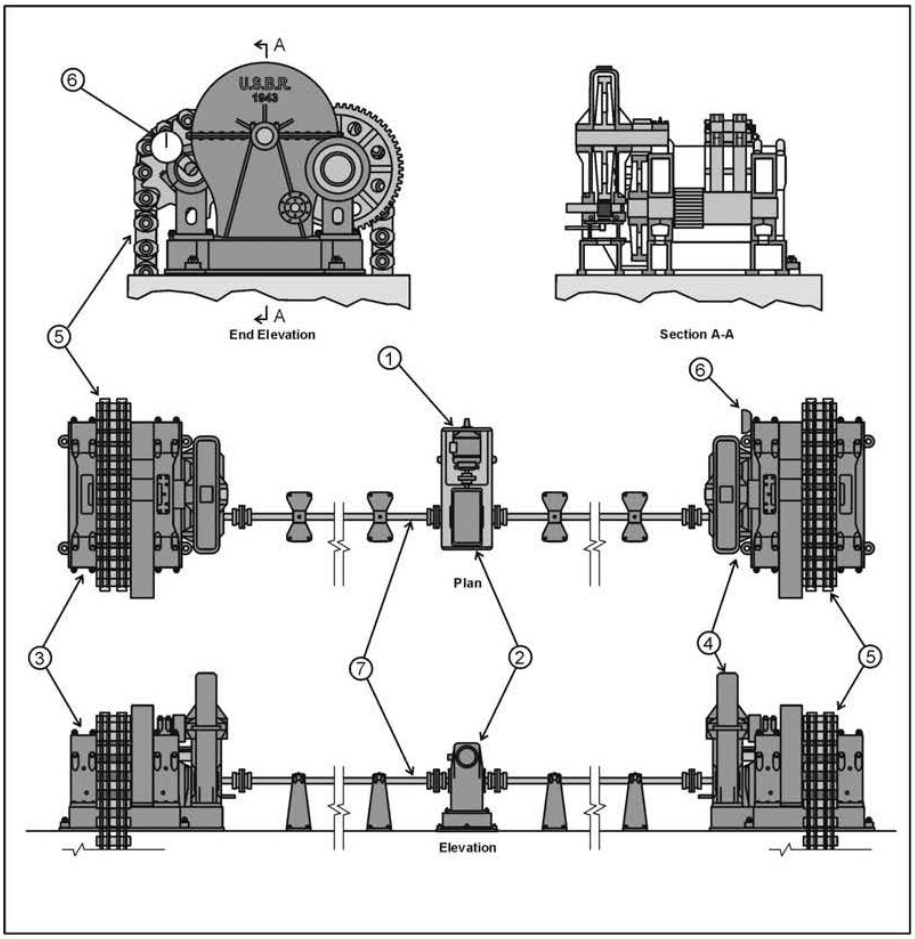

1	Motor	5	Chain
2	Reduction Unit	6	Chain Position Indicator
3	Left Gate Hoist	7	Drive Shaft
4	Right Gate Hoist		

Figure 34.—Chain and sprocket hoist.

FIST 4-1A Maintenance Scheduling
for Mechanical Equipment

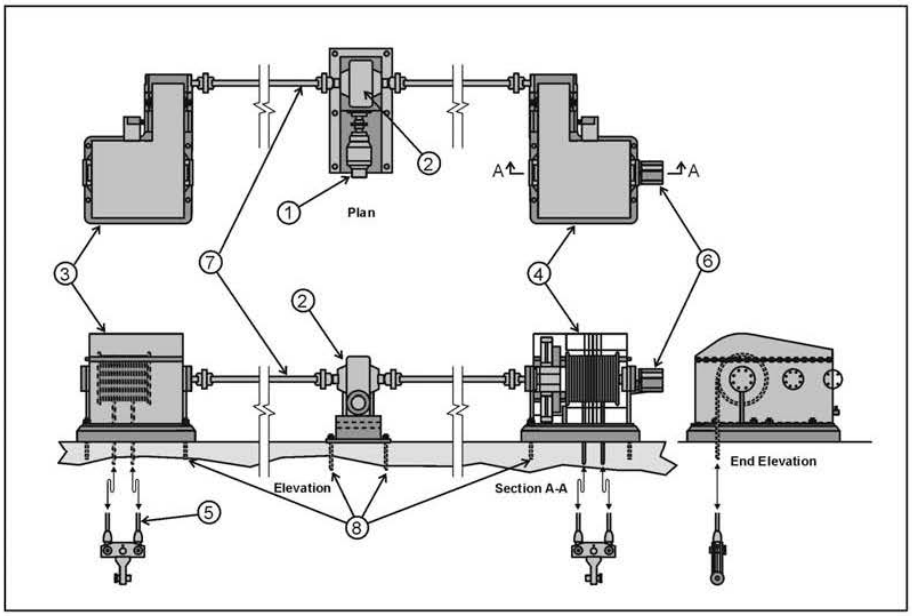

1	Motor	5	Wire Rope
2	Reduction Unit	6	Gate Position Indicator
3	Left Gate Hoist	7	Drive Shaft
4	Right Gate Hoist	8	Anchor Bolts

Figure 35.—Wire rope hoist.

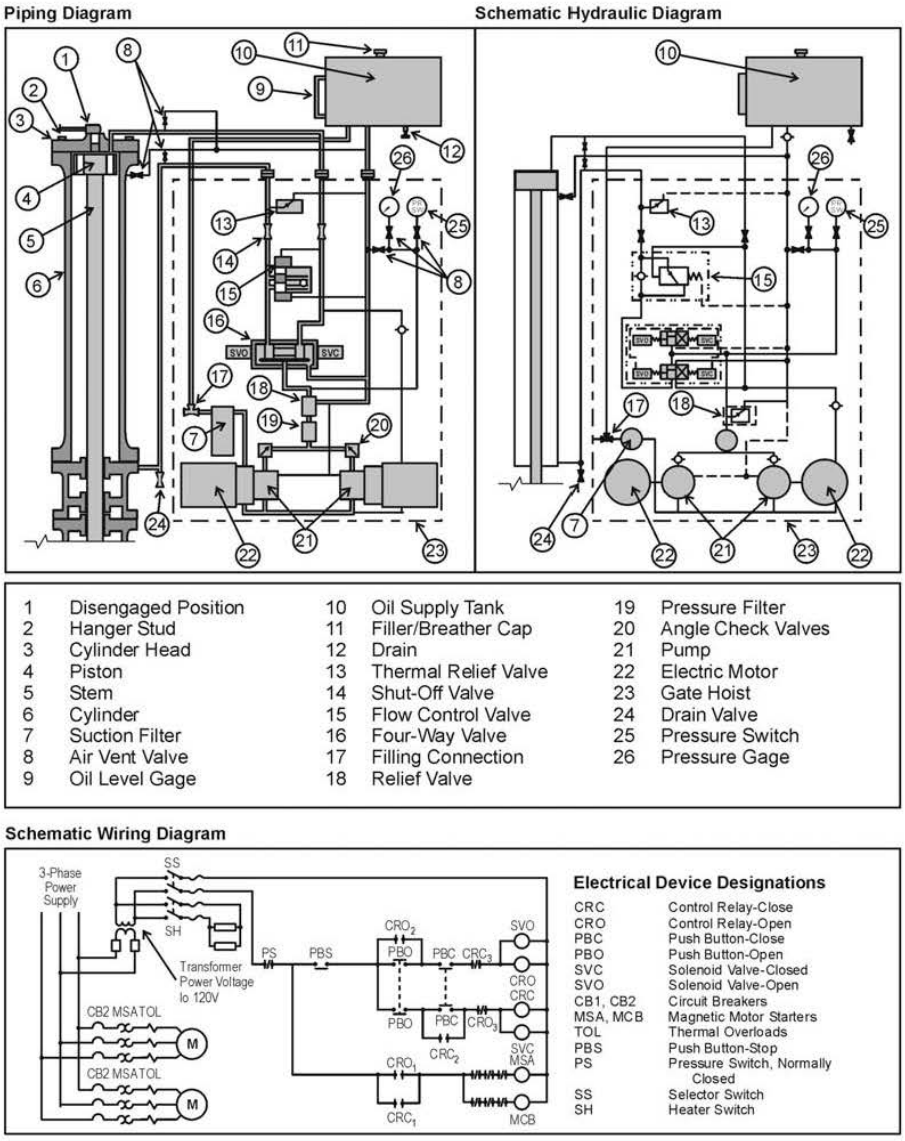

Figure 36.—Typical hydraulic hoist system.

FIST 4-1A Maintenance Scheduling
for Mechanical Equipment

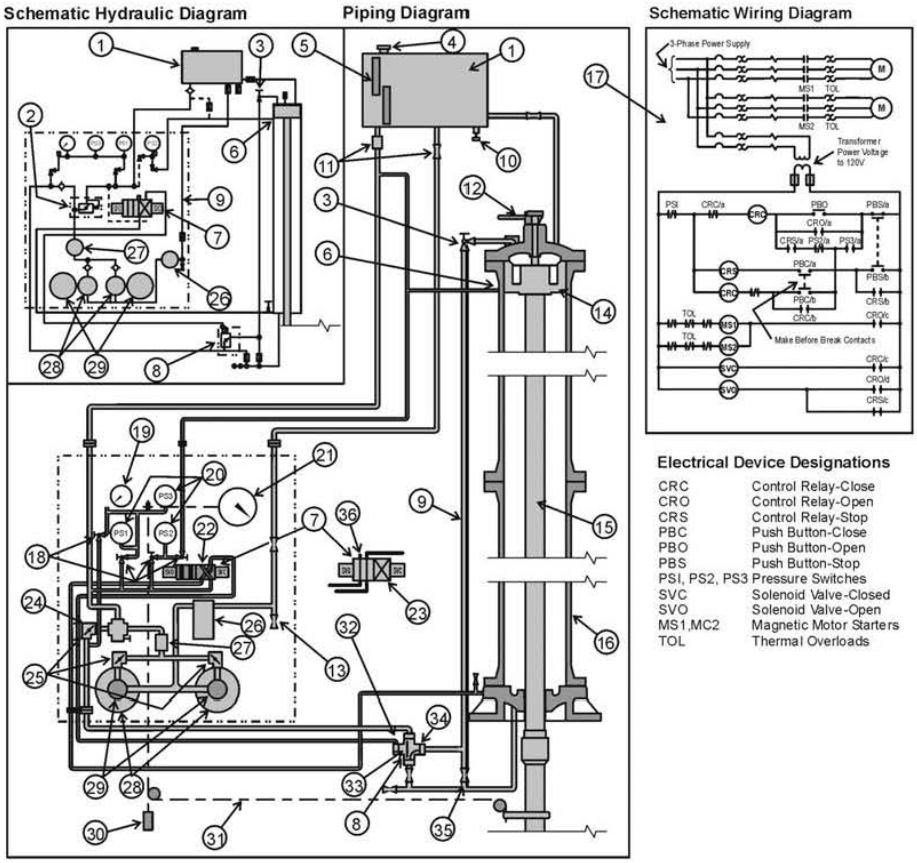

1	Oil Tank	12	Hanger Stud Handel	25	Angle Check Valves
2	Relief Valve	13	System Filling Connection	26	Suction Filter
3	Throttle Valve	14	Piston	27	Pressure Filter
4	Filler/Breather Cap	15	Stem	28	Oil Pumps
5	Oil Level Site Gage	16	Cylinder	29	Electric Motors
6	Restoring Cycle Pressure Connection	17	Control Cabinet	30	Indicator Counterweight
7	Solenoid Operated 4-Way Valve	18	Vent Valve	31	Indicator Chain
8	Remotely Controlled Bypass Valve	19	Pressure Gage	32	Vent Port
9	Bypass Line	20	Pressure Switches	33	Open
10	Drain	21	Position Indicator	34	Closed
11	Check Valve	22	In Open Position	35	Manual Bypass for Servicing
		23	In Closed Position	36	Pipe Plug
		24	System Relief Valve		

Figure 37.—Typical hydraulic hoist system (gravity closing gate).

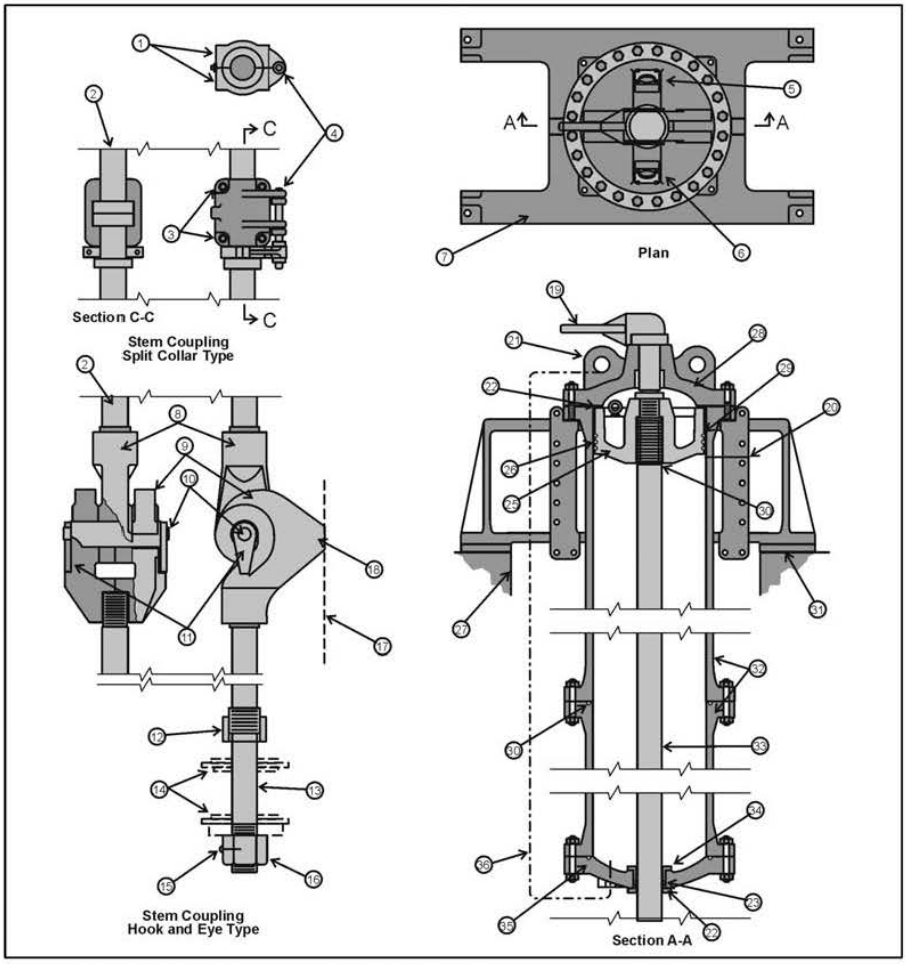

1	Split Collar (collar halves swing open to disengage)	12	Collar (to limit overtravel)	25	Piston
2	Intermediate Stem	13	Gate Stem	26	Piston Rings
3	Bolts	14	Gate	27	Gate Slot
4	Collar Hinge Pin	15	Locking Set Screw	28	Upper Cylinder Head
5	Tank Connection	16	Nut	29	Bronze Overlay on Piston Lands
6	Bypass Connection	17	Sloping Contact Face on Dam	30	O-Ring
7	Support Beam (split)	18	Skid Pad	31	Base Plate
8	Eye	19	Hanger Stud Lever	32	Cylinders
9	Hook	20	Air Vent	33	Piston Stem
10	Pin	21	Lifting Lugs	34	Guide Bushing
11	Keepers (to prevent accidental uncoupling)	22	Gland	35	Lower Cylinder Head
		23	V-Packing	36	Bypass Line

Figure 38.—Typical hydraulic hoist system (hydraulic cylinder).

The gates/valves requiring unbalanced tests are designed to close under full flow The unbalanced testing of gates or valves of outlet works is usually scheduled every 6 years to correspond to the Comprehensive Facility Review. The unbalanced testing of penstock guard gates or valves is usually scheduled to fit into the regular maintenance schedule of the powerplant. The scheduled interval for penstock gates or valves should not exceed 10 years.

3.4 Turbine Pressure Relief Valves

A few turbines in Reclamation facilities (Hoover, Flatiron, Estes, Pilot Butte, and Pole Hill) are equipped with pressure relief valves. These valves are sometimes supplied on high head Francis turbines to limit the pressure rise in the penstock following a load rejection. The relief valves are connected to the wicket gate linkage and are designed to open following a quick wicket closure, as would occur during a load rejection. The valve then will close slowly. Using pressure relief valves allows a quicker closure of the wicket gates which limits the overspeed of the unit. The design of these relief valves varies with manufacturer, but most require the penstock to be watered up to test the operation of the valve as they use water pressure to operate. Because of this requirement, the only way to test the operation of these valves is to perform a load rejection test. Some of the pressure relief valves are also designed to be operated manually so they can be used as bypass valves to allow water to be bypassed if the turbine is not in operation.

3.5 Auxiliary Piping Systems

Auxiliary piping systems include domestic, fire protection, and cooling water systems, hydraulic and lubricating oil systems, and service air systems. In most cases, oil systems require little maintenance other than repair of an occasional leak and routine oil testing and filtering. Due to corrosion, most water systems do require maintenance and, eventually, replacement. The life of a water system will depend a great deal on the corrosiveness and mineral content of the water it carries.

Since determining the internal condition of water piping is very difficult, the first indication of a problem may be a leak or the failure of a valve or other component. Although a leak or valve failure may just be an isolated event, frequently it may be an indication of the condition of the entire system. By monitoring the condition of a piping system, maintenance and replacement can be scheduled, preventing an unscheduled outage. Partial disassembly of a piping system can provide a good indication of the condition of the entire system, but it may damage the piping and valves. Nondestructive tests, such as radiographs or ultrasonic tests, can be used to determine the condition of a piping system. Radiographs will not only show pipe wall thickness but also the amount of scale buildup inside the pipe.

Service air systems may also suffer corrosion damage if excessive moisture is allowed into the system. Scale and rust particles can damage pneumatic tools and cause pneumatic cylinders to stick. If moisture in air piping is a problem, a moisture separator or an air dryer should be installed.

If a piping system fails prematurely because of a corrosion problem, it may be beneficial to replace the piping with a nonmetallic material. Pipe constructed of fiberglass and polyvinyl chloride (PVC) as well as other plastics has been used successfully in corrosive environments. Before switching to one of these materials, give careful consideration to their temperature and pressure limitations. If PVC or fiberglass is used, the installation instructions should be followed carefully. Pipe hanger requirements and joining procedures are significantly different from steel pipe. Fiberglass and plastic piping should not be used in compressed air systems.

3.6 Inspection Checklist

Penstocks and Outlet Pipes

Equipment	Recommended Interval	Reference
1. Supports	Annual, 5 Years	FIST 2-8
2. Expansion Joints	Annual , 5 Years	FIST 2-8
3. Exterior	Annual, 5 Years	FIST 2-8
4. Interior	3 Years	FIST 2-8
5. Penstock Inspection Report (Including Ultra-sonic Thickness Survey and Stress Analysis)	5 Years, Not to Exceed 10 Years	FIST 2-8

3.6.1 Gates and Valves

Abbreviations in parenthesis refer to the types of gates or valves of a particular inspection item.

FW - Fixed Wheel Gate
JF - Jet Flow Gate
SG - Slide Gate
TPRV - Turbine Pressure Relief Valve
RG - Radial Gate
BV - Butterfly Valve
HJ - Hollow Jet Valve
BH - Bulkhead Gates or Stop Logs
CG - Coaster Gate
RS - Ring-Seal Gate
RF - Ring-Follower Gate
TV - Tube Valve

FIST 4-1A Maintenance Scheduling
for Mechanical Equipment

Equipment	Recommended Interval	Reference
6. General Inspection (FW, CG, RS, RF, BH, JF, SG, RG, BV, HJ, TV, TPRV)	Annual, Not Scheduled	Reclamation Practice
7. Seals and Seal Seats (FW, CG, RS, RF, BH, JF, SG, RG, BV, HJ, TV, TPRV)	Annual, Not Scheduled	Reclamation Practice
8. Gate Frames and Tracks (FW, CG)	Not Scheduled	Reclamation Practice
9. Roller and Wheel Assemblies (FW, CG, RS)	Annual, Not Scheduled	Reclamation Practice
10. Pivot Pins and Hinges (RG)	Annual	Reclamation Practice
11. Gate Frames and Bonnets (RS, RF, JF, SG)	Annual, Not Scheduled	Reclamation Practice
12. Gate Leaf, Skin Plates, and Structural Members (FW, CG, RS, RF, BH, JF, SG, RG, BV)	Annual, Not Scheduled	Reclamation Practice
13. Valve Body (BV, HJ, TV) and Valve Needle or Tube (HJ, TV, TPRV)	Annual, Not Scheduled	Reclamation Practice
14. Threaded Stem Hoist and Mechanical Operators (FW, CG, RS, RF, JF, SG, HJ, TV)	Annual, Not Scheduled	Reclamation Practice
15. Chain Hoists (FW, CG, RG)	Annual, Not Scheduled	Reclamation Practice American National Standards Institute (ANSI)/ American Society of Mechanical Engineers (ASME) B30.16
16. Wire Rope Hoists (FW, CG, BH, RG)	Annual, Not Scheduled	Reclamation Practice ANSI/ASME B30.7
17. Hydraulic Hoists (FW, CG, RS, RF, JF, SG, BV, HJ)	Annual, Not Scheduled	Reclamation Practice
18. Balanced Closure Tests (FW, CG, RS, RF, SG, RG, BV)	Annual	Reclamation Practice
19. Unbalanced Tests (FW, CG, RS, RF, SG, RG, BV)	Outlet Works – 6 Years Penstock – Not to Exceed 10 Years	Reclamation Practice
20. Turbine Pressure Relief Valve Operational Tests	Annual, Not to Exceed 10 Years	Reclamation Practice

Auxiliary Piping Systems

Equipment	Recommended Interval	Reference
21. Pipe and Fittings - Exterior Surface	Annual	Reclamation Practice
22. Pipe and Fittings - Interior Surface	Not Scheduled	Reclamation Practice
23. Gate Valves, Globe Valves, Plug Valves, etc.	Annual, Not Scheduled	Reclamation Practice
24. Check Valves	Not Scheduled	Reclamation Practice
25. Pressure Regulating and Pressure Relief Valves	Annual, Not Scheduled	Reclamation Practice

3.6.2 Penstocks, Outlet Pipes

1. *Supports*

   Annual. Check concrete supports for cracks, spalling, or signs of movement. Check lubrication of sliding supports and clean exposed bearing surfaces. Make sure sliding surfaces are not obstructed.

   5 Years. Perform thorough inspection of supports and document results in penstock inspection report. Thoroughly clean packing area and sliding surfaces and install new packing if required.

2. *Expansion Joints*

   Annual. Check leakage past packing and tighten as necessary. Sliding surfaces should be clean of rust and scale. Clean as required.

   5 Years. Perform thorough inspection of expansion joints and document results in penstock inspection report. Thoroughly clean packing area and sliding surfaces and install new packing if required.

3. *Exterior*

   Annual. Inspect surface for deterioration of paint and for corrosion, paying particular attention to rivets, bolts, and welds. Prepare corroded or deteriorated surfaces by sandblasting or other acceptable means and repaint. Steel pipe, where it emerges from concrete, is subject to galvanic corrosion. These areas should be repaired by thoroughly cleaning and sandblasting and painting with a zinc rich primer. Look for leakage from gasketed joints such as mandoors or at drain or fill lines.

   5 Years. Perform a detailed inspection of the penstock exterior and include in the penstock inspection report. Sandblast and paint exterior surfaces when condition of paint has reached the point that it is no longer adequate.

4. *Interior*

   3 Years. Inspect surface for paint deterioration, corrosion, and cavitation damage paying particular attention to rivet heads and welded and bolted joints. Check condition of tie rods and supports at bifurcations. Prepare corroded or deteriorated surfaces by sandblasting or other acceptable means and repaint with an appropriate paint.

   5 Years. Perform a detailed inspection of the penstock interior and include in the penstock inspection report. Sandblast and paint interior surfaces when condition of paint has reached the point that it is no longer adequate.

5. *Inspection Report*

   5 Years. An inspection report documenting the results of a detailed penstock inspection and appurtenant features should be completed. This detailed inspection should include an ultrasonic thickness survey and a stress analysis based upon the remaining metal thickness. PO&M 185 (Penstock Inspection Checklist) can be found on Reclamation's Intranet at http://intra.usbr.gov/forms/pomforms.html.

3.6.3 Gates and Valves

6. *General Inspection*
   (FW, CG, RS, RF, BH, JF, SG, RG, BV, HJ, TV, TPRV)

   Annual. Inspect exposed and accessible components for corrosion, deterioration of paint, or any other damage. Unwater penstock or water conduit and inspect downstream portion of gate or valve. Where guard gates are available, inspect upstream portion as well. If possible, operate gate through its full range of travel.

   Not Scheduled. Install stop logs or bulkhead gates to inspect portions of gates or valves normally inaccessible. Remove or disassemble gate or valve as necessary to replace or renew seals or guides, to sandblast and repaint, or to repair any other damage.

7. *Seals and Seal Seats*
   (FW, CG, RS, RF, BH, JF, SG, RG, BV, HJ, TV, TPRV)

   Annual. Check for excessive leakage. Adjust seals or schedule maintenance as required. Leakage, especially through high-pressure gates or valves, can cause further damage if not corrected. Where accessible, check rubber seals for cracking or other signs of deterioration and bronze seals for wear, cavitation erosion, or galling. Check operation of greasing systems where applicable.

   Not Scheduled. Unwater as required and check for damaged or missing seals, seal retainers, and bolts. Check that water actuated seals are free to move and that water lines and ports are clear. Check seal seats, wallplates, gate sills, and adjacent concrete for wear or other damage. Look for signs of misalignment, such as uneven wear on the seals or seal seats.

8. *Gate Frames and Tracks*
(FW, CG)

Not Scheduled. In most cases, a thorough inspection of the tracks and gate frames will require installing bulkhead gates or stop logs or using divers or a remote controlled underwater vehicle. The tracks for the rollers or wheels should be checked for deformation, corrosion, and missing clamps or bolts. The gate frame should be checked for deformation, corrosion, cavitation damage, and any missing bolts.

9. *Roller and Wheel Assemblies*
(FW, CG, RS)

Annual. Lubricate wheels and rollers of gates with manual grease fittings.

Not Scheduled. Removal or disassembly of the gate is usually required for inspection of roller and wheel assemblies. Roller assemblies should be checked for any damaged rollers, pins, or links. Rollers and wheels should be checked for free movement and for flat spots or other indications that the rollers or wheels have been sliding and not rolling. Antifriction bearings (roller or ball bearings) should be checked for free rotation, adequate lubrication, and corrosion and should be replaced as necessary. Bronze bushings should be checked for scoring or adequate lubrication. Bearing seals should be replaced if there is any sign of damage. The bearing journal should be checked for scoring, corrosion, or any other damage. The bearing journal of self-lubricated bushings can sometimes corrode due to an electrolytic reaction from the graphite in the bushing. If this is noted, the bushings should be replaced with a non-graphite, self-lubricated bushing or a plain bronze bushing with some type of lubrication system.

10. *Pivot Pins and Hinges*
(RG)

Annual. Check general condition of pivot pin or hinge, looking for bent or damaged parts. Check that pivot pins are properly lubricated. Inspect concrete adjacent to anchors or pivot pins for cracking or spalling.

11. *Gate Frames and Bonnet*
(RS, RF, JF, SG)

Annual. If accessible, inspect interior of fluidway, checking for any cavitation erosion, corrosion, or other damage. Check bonnet cover for cracks or leaky gaskets. Check for excessive leakage past gate stem and position indicator rod packing and tighten as required. If equipped with a lower bonnet drain, flush silt from bottom of bonnet.

Not Scheduled. Disassemble gate and inspect for any cracks, corrosion, cavitation erosion, or any other damage. Sandblast or clean by acceptable method and paint interior of bonnet as necessary.

12. Gate Leaf, Skin Plates, and Structural Members (FW, CG, RS, RF, BH, JF, SG, RG, BV)

Annual. Accessible portions should be checked for corrosion, cavitation erosion, missing or damaged bolts or rivets, or any other damage. Check flexible drain hoses of drum gates to ensure they are clear and unplugged.

Not Scheduled. Disassemble gate or install bulkhead gates and unwater to allow inspection of entire gate or gate leaf. Check bottom of the gate leaf or gate for cavitation erosion. Sandblast or clean by acceptable method and paint as necessary. Check structural members for cracked welds, missing or damaged bolts or rivets, or any other damage. On drum gates and some radial gates, check interior of gate for leaks, plugged drain holes, and general condition. Drum gate flexible drain hoses should be cleaned with a rotary drain cleaner.

13. Valve Body (BV, HJ, TV) and Valve Needle or Tube (HJ, TV, TPRV)

Annual. Exterior of valve should be checked for leakage, cracks, and corrosion. If accessible, interior of valve should be checked for corrosion, cavitation erosion, scale buildup that may interfere with valve movement or sealing, and any other damage. Check lubrication to bearings and the oil level of gear boxes.

Not Scheduled. Unwater water conduit or penstock or disassemble valve to allow inspection of all valve components. Check for parts damaged by cavitation erosion or corrosion. Check water and oil seals and replace as necessary. Polished surfaces of hydraulically operated hollow jet valves should be checked for any damage and built up by welding or other process, remachined, and repolished if necessary. Check bearings and bronze seal rings for wear or other damage and replace if necessary.

3.6.4 Gate and Valve Operators and Hoists

14. Threaded Stem Hoist and Mechanical Operators (FW, CG, RS, RF, JF, SG, CY, HJ, TV)

Annual. Inspect gear cases for leaks or other damage. Check motor coupling for misalignment. Check oil in gear boxes for water contamination and for proper level. Check grease coated gears, stems, and stem nuts for dirt or dust contamination of grease. Check gears, stem, and stem nut for wear, galling, or other damage. Grease bearings or other components equipped with grease fittings, being careful not to overgrease and damage grease seals. During operational test, check for unusual or excessive vibration or noise.

Not Scheduled. Drain gear boxes and refill with new oil. Grease coated gears and stems should be cleaned and recoated with new grease. Disassemble as required to check condition of gears, bearings, or other components normally inaccessible.

15. *Chain Hoists*
(FW, CG, RG)

Annual. Hoists should be inspected in accordance to ANSI/ASME B30.16, *Overhead Hoists.* Inspect chain for corrosion and deformed chain links or pins. Check sprocket for damaged teeth. Apply appropriate lubricant to chain. Check oil in gear boxes for water contamination and for proper level. Check condition of grease for dirt or dust contamination on grease-coated gears. Grease sheave, drum, and gear shaft bearings equipped with grease fittings, being careful not to overgrease and damage grease seals. Check gears for uneven wear, galling, or signs of misalignment. Check brake shoes and brake drums for signs of overheating or other damage.

Not Scheduled. Drain gear boxes and refill with new oil. Grease-coated gears should be cleaned and recoated with new grease. Disassemble as required to check condition of gears, bearings, or other components normally inaccessible.

16. *Wire Rope Hoists*
(FW, CG, BH, RG)

Annual. Hoists should be inspected in accordance to ANSI/ASME B30.7, *Base Mounted Drum Hoists.* Inspect wire rope for broken wires, worn or abraded wires, corrosion, and crushed or flattened strands. See section 6, "Cranes, Hoists, and Rigging Equipment," for replacement requirements. Inspect rope drum and sheaves for wear and spooling characteristics of the drum. If required, apply lubricant to entire length of wire rope. Check oil in gear boxes for water contamination and for proper level. Grease sheave, drum, and gear shaft bearings equipped with grease fittings. Check gears for uneven wear, galling, or signs of misalignment. Check condition of brake shoes and brake drums for signs of overheating or other damage.

Not Scheduled. Drain gear boxes and refill with new oil. Grease-coated gears should be cleaned and recoated with new grease.

17. *Hydraulic Hoists*
(FW, CG, RS, RF, JF, SG, CY, BV, HJ)

Annual. Check entire hydraulic system for leaks, including piping, valves, and packing. Drain accumulations of water and sediment from oil reservoir and lower end of hydraulic cylinders. Prior to scheduled maintenance, take oil sample after operating system for sufficient time to allow the oil and any contaminants to mix. Oil sample should be checked for water content, viscosity, acidity, and solid contaminants. Based on results of oil tests, drain system, filter oil, and clean oil reservoir with lint free rags. Add oil to system if it is necessary to bring the oil to the proper level, making sure that the added oil is exactly the same type and viscosity as the oil in the system. Clean or replace oil filters. Calibrate pressure gauges and pressure switches. Check setting and operation of pressure relief valves. Operate gate or valve through a complete open-close cycle under balanced conditions, checking the opening

or closing times, and noting any unusual or excessive noise or vibration. If there is a significant increase in either the opening or closing time, determine the reason for increase. Check surface condition of piston stem for rusting, scoring, or other condition that could impair operation or cause leakage. Check position indicators to ensure wire rope and sheaves or chains and sprockets move freely.

Not Scheduled. Remove cylinder head and inspect cylinder wall looking for signs of corrosion pitting or scoring. Check condition of stems and stem couplings, applying a coating of waterproof grease to couplings normally submerged or exposed to moisture.

3.6.5 Guard Gate and Valve Closure Tests

18. *Balanced Closure Tests*
(FW, CG, RS, RF, SG, RG, BV)

Annual. Perform gate or valve closure test under balanced, no flow conditions following the test procedure for the particular gate or valve being tested. Test procedure should be for the specific gate or valve being tested and not a similar one. Contact the Mechanical Equipment Group, 86-68410, if a procedure is not available or if there is any uncertainty about the procedure that is available. Record opening and closing times, pressures for hydraulic systems, and amperage for electric hoists.

19. *Unbalanced Tests*
(FW, CG, RS, RF, SG, RG)

Outlet Works – 6 Years, Penstocks – Not to Exceed 10 years. Perform gate or valve test following the test procedure for the gate or valve being tested. Use caution when conducting this type of test. Test procedure should be for the specific gate or valve being tested and not a similar one. Contact the Mechanical Equipment Group, 86-68410, if a procedure is not available or if there is any uncertainty about the procedure that is available.

3.6.6 Turbine Pressure Relief Valves Operational Tests

20. *Operational Tests*

Annual. If manual operation is possible, open and close valve with turbine shut down. Check that valve opens smoothly and closes with minimal leakage.

Not to Exceed 10 Years. Perform full load rejection test to determine if the pressure relief valve is operating satisfactorily. Instrumentation should include gate position, relief valve position, relief valve dashpot position, penstock pressure, and unit speed. Check maximum pressure rise and closing time of relief valve.

3.6.7 Auxiliary Piping Systems

21. *Pipe and Fittings - Exterior Surface*

    Annual. Visually inspect all threaded, welded, and flanged fittings, checking for any leaks or corrosion. Replace or tighten fittings or pipe as required. Check pipe hangers and supports to make sure they are carrying their share of the load and that anchors are tight. Examine paint for cracking, chalking, or other deterioration. Remove corrosion by wire brushing, sandblasting, or other acceptable method and repaint.

22. *Pipe and Fittings - Interior Surface*

    Not Scheduled. Partially disassemble piping or utilize a nondestructive test method to determine condition of interior surfaces. Measure pipe wall thickness and compare to original thickness.

23. *Gate Valves, Globe Valves, Plug Valves, etc.*

    Annual. Check valve stem packing for leaks and tighten packing gland as required. Operate valve through its full range of movement several times. With valve closed under pressure, listen for leakage past valve and correct as required. Lubricate the valve stems, plug valve seats, and other components as required with appropriate lubricant.

    Not Scheduled. Disassemble valve and inspect condition of valve body, stem, and sealing surfaces and repair as required. Completely remove old valve stem packing and install new packing.

24. *Check Valves*

    Not Scheduled. Check for leakage past valve while under full operating pressure. Disassemble and replace or regrind valve seats as required.

25. *Pressure Regulating and Pressure Relief Valves*

    Annual. Check operation and setting of pressure regulating and pressure relief valves.

    Not Scheduled. Disassemble valves and remove any scale buildup that interferes with the operation of the valve. Reassemble and check operation and settings of valves.

THIS PAGE INTENTIONALLY LEFT BLANK

4. Mechanical Governors

4.1 General

Periodic maintenance of a mechanical governor is essential for reliability and to maintain optimum performance. When preparing a maintenance schedule for a mechanical governor, consult FIST Volume 2-3, *Mechanical Governors for Hydroelectric Units,* and the governor manufacturer's literature.

The maintenance interval required for many of the governor components will depend on the cleanliness of the oil in the governor system. Cleaner oil will lead to less varnish and less wear of parts in contact with the oil. As with unit maintenance, many plants have extended the time interval between major maintenance tasks on the governor. Many of the tasks listed here, as annual, actually are performed during the major maintenance periods. Extending the interval is acceptable as long as proper documentation exists to support the variance.

It should be noted that disassembly of the dashpot or replacement of the pilot valve or other components will probably change the settings performed in the governor tests and adjustments in item 1.

4.2 Inspection Checklist

Equipment	Recommended Interval	Reference
1. Governor Tests and Adjustments	Annual 5 Years	FIST 2-3, section 7; Western Electricity Coordinating Council (WECC)
2. Governor Ball Head (Woodward Vibrator Type)	Weekly, Annual	FIST 2-3, section 8; Woodward Governor Company Literature
3. Governor Ball Head (Woodward Strap Suspended Type)	Quarterly, Annual	FIST 2-3, section 8; Woodward Governor Company Literature
4. Governor Ball Head (Pelton)	Annual	FIST 2-3, section 8; Woodward Governor Company Literature
5. Woodward Oil Motor Vibrator	Annual	FIST 2-3, section 8; Woodward Governor Company Literature
6. Pilot Valve	Biannual	FIST 2-3, section 8; Woodward Governor Company Literature
7. Main Distributing and Auxiliary Valves	Annual, 5 Years, Not Scheduled	FIST 2-3, section 8; Woodward Governor Company Literature

FIST 4-1A Maintenance Scheduling
for Mechanical Equipment

Equipment	Recommended Interval	Reference
8. Miscellaneous Valves	5 Years	FIST 2-3, section 8; Woodward Governor Company Literature
9. Dashpot	Annual, 5 Years	FIST 2-3, section 8; Woodward Governor Company Literature
10. Linkage and Pins	Monthly, Annual	FIST 2-3, section 8; Woodward Governor Company Literature
11. Restoring Cable	Annual	FIST 2-3, section 8; Woodward Governor Company Literature
12. Hydraulic System	Daily, Weekly, Monthly, Annual	FIST 2-3, section 8; Woodward Governor Company Literature
13. Generator Air Brake Valve	Annual, 5 Years	FIST 2-3, section 8; Woodward Governor Company Literature
14. Permanent Magnet Generator (PMG) or Speed Signal Generator (SSG)	Annual, 5 Years	FIST 2-3, section 8; Woodward Governor Company Literature
15. Position and Limit Switches	Annual	FIST 2-3, section 8; Woodward Governor Company Literature
16. Shutdown Solenoids	Annual	FIST 2-3, section 8; Woodward Governor Company Literature
17. Speed Changer and Gate Limit Motors and Remote Position Indicators	Annual	FIST 2-3, section 8; Woodward Governor Company Literature
18. Actuator Tank	5 Years	FIST 2-9; Designer's Operating Criteria
19. Governor Inspection Report	Annual	Reclamation Practice

1. *Governor Tests and Adjustments*

   Annual. Check wicket gate timing.

   5 Years. Check speed droop calibration, speed changer adjustment, speed stability index, and governor time constant as described in FIST Volume 2-3, section 7.

2. *Governor Ball Head (Woodward Vibrator Type)*

   Weekly. Oil ball head by applying a few drops of light machine oil to the top of the ball head motor shaft. See if a discernible motion can be felt with a

finger between the main valve and base. If no motion can be felt, replace the vibrator and balls.

Annual. After shutdown, remove ball head and disassemble. Clean and inspect the slide blocks, flyball rod, and flyball rod bushings. Replace vibrators and vibrator balls if no discernible motion of the main valve was felt before shutdown or if there is any noticeable wear on the vibrators. If sliding surfaces of slide blocks are worn, rotate both blocks to new surface. Scribe an "X" or other mark on the worn slide block surfaces so they are not reused. Check flyball rod for wear and for straightness and replace as required. Check ball bearings in ball head motor and flyball arms and replace as required. Replace flyball rod bushings if worn or scored. Cover vibrator balls with a light grease and reassemble. Do not fill vibrator cup with grease as this can dampen the vibration. Check operation of pressure type oilers if so equipped.

3. *Governor Ball Head (Woodward Strap Suspended Type)*

Quarterly. Add dashpot oil to top of ball head motor to fill internal dashpot. Do not use lubricating oil.

Annual. Observe operation of ball head and check for any unusual vibration. If any abnormal vibration is noted, disassemble ball head and check condition of thrust bearing, ball head shaft bearings, and ball head motor bearings. Follow manufacturer's alignment and reassembly procedure.

4. *Governor Ball Head (Pelton)*

Annual. Observe ball head and ball head motor for any unusual vibration or noise. Replace ball head motor bearings if any abnormal vibration or noise is noted. Follow manufacturer's instructions for disassembly and reassembly.

5. *Woodward Oil Motor Vibrator*

Annual. Check that oil motor vibrator is providing a 0.006- to 0.007-inch oscillation of the main valve and that the motor is turning in the range of 400–600 rpms (7–10 hertz). Adjust the eccentric bushing in the pivot lever to change the magnitude of oscillation. Adjust the oil flow regulator to change the motor speed.

6. *Pilot Valve*

Biannual. Disassemble pilot valve and remove all rust spots and oil varnish with a fine grade emery cloth (320–500) and crocus cloth. Any nicks or scratches should be removed by stoning with a very fine flat stone. Be careful not to round or break the edges of the valve lands. If wear is excessive or the plunger does not move freely in the bushing, replace it with a new matched plunger-bushing set.

7. *Main and Auxiliary Distributing Valves*

Annual. Check that main valve plunger is free. Shut off oil supply to pilot and main valves and disconnect the pressure supply to the pilot valve. With the oil pressure relieved, lift main valve plunger until it hits the opening stop

nuts and drop it so it hits closing stop nuts. If the plunger drops freely, it is acceptable; but if there is any binding or if the plunger drops sluggishly, disassemble the valve to determine the problem. Check operation of transfer valve and auxiliary valve.

5 Years. Remove main and auxiliary valve plunger and remove all rust spots and oil varnish with a fine grade emery cloth (320–500) and crocus cloth. Any nicks or scratches should be removed by stoning with a very fine flat stone. Be careful not to round or break the edges of the valve lands. Check ports in valve bushings for dirt or sludge and clean as required. Check that main valve plunger is free and can fall of its own weight after reassembly.

Not Scheduled. Completely disassemble main and auxiliary valves. Remove opening, closing, and pressure plungers and remove all rust spots and oil varnish with a fine grade emery cloth (320–500) and crocus cloth. Check condition of main distributing valve plungers piston rings and replace as required.

8. *Miscellaneous Valves*

5 Years. There may be other hydraulic valves in the governor, such as gate limit valves and solenoid valves. These valves should be disassembled and all rust spots and oil varnish should be removed with a fine grade emery cloth (320 to 500) and crocus cloth. Any nicks or scratches should be removed by stoning with a very fine flat stone. Care must be taken not to round or break the edges of the valve lands. Check ports in valve bushings for dirt or sludge and clean as required.

9. *Dashpot*

Annual. Check dashpot oil level and add dashpot oil if necessary. Do not use lubricating oil. Check operation of solenoid operated bypass.

5 Years. If governor tests from item 1 indicate a sticking dashpot, disassemble, inspect, and clean dashpot plungers. Before reassembly, check the setting of the small dashpot plunger. On Woodward governors, the distance from the center of the pivot pin to the top of the bonnet should be 2⅞ inches. Turn the small plunger spring to adjust this distance. On other governors, check the manufacturer's instruction book for adjustment procedure. To refill the dashpot, reassemble except for the small dashpot plunger. Tip the dashpot so that the opening for the small plunger is higher than the large plunger and fill the dashpot through the small plunger opening. Move the large plunger occasionally during filling to allow air to escape. To check for trapped air once the dashpot is filled, install the small plunger, close the dashpot needle, and operate the large plunger while holding the small plunger. The small plunger should react instantaneously to any movement of the large plunger. Any lag in small plunger movement indicates there is air in the dashpot or a leak past the needle, solenoid bypass, or the plungers. To purge the air, open the needle, hold the small plunger in place, and operate the large plunger.

To check the condition of the dashpot, close the bypass and the needle completely, push the small plunger down as far as it will go, and time how long it takes to recenter. It should take more than 50 seconds to travel 0.125 inch. A shorter time indicates excessive leakage past the needle or plungers, and the dashpot should be repaired or replaced.

After any maintenance on the dashpot, it is important to perform the governor adjustment tests of item 1 to bring the governor back to optimum performance.

10. *Linkage and Pins*

Monthly. Lubricate links and pivot pins with a light machine oil.

Annual. Check links and pins for wear or binding. Use a new pin to check holes in links for wear and use a new link with the proper sized mating hole to check condition of pins. Replace as required. Check bearings in linkage, on shafts, and in the control panel for any roughness and replace as required. Lubricate bearings as required. Check gears for wear and proper meshing.

11. *Restoring Cable*

Annual. Lubricate restoring cable sheaves and rod ends at servomotor connection.

Not Scheduled. Disassemble sheaves and inspect sheaves and cable. Replace sheaves if pulley is worn or if bearings are rough.

12. *Hydraulic System*

Daily. Check level of oil in sump and actuator tank and add oil or charge pressure tank with air as required.

Weekly. Switch lead pump to lag and vice versa.

Monthly. Switch strainers and clean or replace filter element. If pumps are equipped with hour meters, note run time. Compare run time to previous months readings and investigate any large deviation.

Annual. Prior to scheduled maintenance, send a sample of the governor oil to the laboratory for analysis. If the analysis shows filtration is required, drain and filter the oil.

When oil is drained, clean the oil sump and actuator tank with lint free rags and squeegee, inspect, and repaint as required. Check condition of float valve disk, seat, float, and float arm for any damage or wear. Check condition of float, cable, and sheaves of level switches for wear and free operation.

After the system is refilled, check operation of pump unloader valve. Check the operation of pressure relief valves on pumps and actuator tank. Relief valves on the actuator tank should be set to operate at 10-percent higher than the working pressure. The pump relief valves should be set to operate at a

slightly lower pressure than the actuator tank relief valve. This is to prevent the pumps from continuing to fill the actuator tank should a high-pressure condition in the system occur.

Check calibration and operation of pressure and level switches and reset as required. Check annunciation where applicable.

With wicket gates blocked, time pumping cycle for each pump, noting the length of time the pump is on, the rise of the oil level in the actuator tank, and the length of time between pumping cycles. Compare to previous readings. If pump is taking longer to reach operating pressure or is pumping more frequently, check for leaks in the system.

13. *Generator Air Brake Valve*

Annual. Check manual and solenoid operation of valve. Lubricate pivot points with light machine oil. Clean airline filter.

5 Years. Disassemble and remove all rust spots with a fine grade emery cloth (320–500) and crocus cloth. Lap valve seats if required.

14. *Permanent Magnet Generator or Speed Signal Generator*

Annual. Inspect speed switches and drive gears for wear. Lubricate pivot pins and check speed switch bearings. Check insulation between PMG or SSG housing and the supporting frame by measuring the resistance from the housing to ground with a meggar. Replace or repair insulating gasket as required. Check voltage output of PMG.

5 Years. Check setting and operation of speed switches. Replace main drive bearings of PMG or SSG. If necessary, remagnetize PMG field following procedure in FIST Volume 2-3.

15. *Position and Limit Switches*

Annual. Check operation and settings of gate limit, speed changer position, and gate position switches. Adjust as required. Clean contacts as required. Check drive gears for wear and proper meshing. Check annunciation where applicable.

16. *Shutdown Solenoids*

Annual. Check operation of solenoids for binding or sticking when tripped and reset. Check settings to ensure that complete shutdown solenoid closes wicket gates completely and partial shutdown solenoid brings gates to speed no load setting. Inspect solenoid for any signs of any overheating or other damage. Check condition of electrical connections and auxiliary contacts.

17. *Speed Changer and Gate Limit Motors and Remote Position Indicators*

Annual. Operate motors and check for excessive vibration or noise. Replace bearings as required. Check electrical connections and motor brushes. Check operation of position indicators for any

sticking or binding and check correlation between transmitter and receiver. Check gears for wear and proper meshing.

18. *Actuator Tank*

5 Years. Inspect tank in accordance with FIST 2-9, *Inspection of Unfired Pressure Vessels.*

While designs may vary, in general, accumulator tanks are sized; and the oil level/air cushion are adjusted to provide five full servo motor strokes when the system pressure is slightly below the minimum normal operating pressure (5 psi).

Verify low-pressure switch settings. Typically, at least two low-pressure switches are associated with the actuator tank. One switch is set to alarm at a pressure slightly below the minimum normal operating pressure, and the other is set to operate the shutdown solenoid, shut off the governor pumps, and close the penstock or unit guard gate when the pressure drops to a point that corresponds to two complete servo strokes left in the tank.

Verify level switch settings. Low level alarm should be set to close when level falls to a level that corresponds to 5 psi less than normal low operating pressure. Low level shutdown should close to shut down unit and oil pumps and close penstock gate at a level corresponding to two complete servomotor strokes.

19. *Governor Inspection Report*

Annual. An inspection report similar to PO&M Form 192 should be filled out annually to record data obtained during the annual inspection. This form can be found on Reclamation's Intranet at http://intra.usbr.gov/forms/pomforms.html.

THIS PAGE INTENTIONALLY LEFT BLANK

5. Air Compressors

5.1 General

Air compressors are a common piece of equipment found in most pumping plants and maintenance shops. There are a number of different types of compressors available, but the two most common types are the reciprocating and the rotary screw compressors.

5.2 Reciprocating Air Compressors

Reciprocating compressors have been available for many years in a variety of sizes and configurations and make up the majority of air compressors found in plants and maintenance shops. Reciprocating compressors are efficient and relatively simple to operate and maintain. Most reciprocating compressors can be overhauled completely with a minimum of tools and parts.

A reciprocating compressor compresses air in a cylinder, against a cylinder head, by a reciprocating piston. While all reciprocating compressors operate in basically the same manner, there are many variations in their construction. For example, a reciprocating compressor can be single or multicylinder, single or double acting, single or multistage, air or water cooled, and can have a horizontal, vertical, or angled cylinder arrangement. Other variations are possible depending on the application.

Single acting compressors use automotive type pistons, connected directly to the crankshaft by connecting rods, and compress air on one side of the piston only. Double-acting compressors have a double-acting piston, compressing air on both sides, driven by a piston rod which extends through a packing box. The piston rod is connected to a crosshead which is connected to the crankshaft by a connecting rod. Both single and double-acting compressors are available as single or multistage. Multistage compressors develop their final pressure in steps by connecting the discharge of the first stage, through an intercooler, to the intake of the second stage. The intercooler removes the heat of compression of the first stage.

5.3 Rotary Screw Air Compressors

A rotary screw air compressor uses two meshing helical-shaped rotors to compress the air. As the rotors turn, air is compressed by the advancing helix. The rotor either may be oil-flooded or dry. Dry rotor compressors require the use of timing gears to maintain the proper clearance between the rotors. The oil in the oil-flooded type compressor lubricates and seals the rotors and acts as a coolant to remove the heat of compression. The oil-flooded type does not require timing gears as the oil film prevents contact of the rotors, but an air-oil separator is necessary to remove the oil suspended in the compressed air as it leaves the compressor.

Rotary screw compressors have fewer moving parts than reciprocating compressors and provide a smooth, nearly pulse-free air supply. Rotary screw compressors are usually supplied in a "package" requiring only connection to electrical power and to an air system. Since there is little vibration, they do not require the massive foundation a comparable reciprocating compressor would need. They are also very popular in trailer-mounted, internal combustion engine driven portable compressors.

The construction of a rotary screw compressor is such that little maintenance can be accomplished in the field by plant personnel. The lubricating oil filtration system must be maintained regularly as the tight tolerances make clean oil an necessity. The air end (i.e., the rotors and their housing) of the rotary screw compressor has no sacrificial components, such as the piston rings of the reciprocating type. Since the air end is constructed with such high precision and tight tolerances, in most cases, the entire air end must be replaced as a unit.

5.4 Accessories

5.4.1 Inlet Filters

Inlet filters prevent dust and other particulates from entering the compressor. All compressors, especially rotary screw compressors, are susceptible to wear or other damage from dirt particles. A clogged filter can cause a significant loss in compressor efficiency. To prevent damage and loss of efficiency, regular cleaning of filter elements or replacement of throw away elements is required.

5.4.2 Aftercoolers

Aftercoolers are installed on the discharge line to lower the compressed air's discharge temperature and to condense water from the air. Aftercoolers usually are installed with a separator and trap to handle the condensate.

5.4.3 Separators

Separators are used to remove entrained liquids from the compressed air. This is usually accomplished by changing the direction of movement of the liquid particles so that they are removed from the air either centrifugally or through impingement against a separator element. The most common types of separators are impingement, centrifugal, and cyclone types. Separators should be equipped with a trap or drain.

5.4.4 Traps

Traps collect liquid that has been removed from the air by separation or condensation and release it, either automatically or through a manual valve. Traps are installed with separators, filters, aftercoolers, receivers, and dryers. They also should be installed at the low points in distribution systems, especially on lines passing through a cold area. An in-line

strainer is usually installed directly upstream of a trap to prevent sediment or other contamination from clogging the trap.

5.4.5 Dryers

Dryers are used when dryer air is required than can be provided by an aftercooler system. The most common are refrigerated dryers which condense the moisture from the air by reducing the air temperature. Deliquescent type dryers absorb moisture into a deliquescent material which periodically must be replaced. Desiccant dryers use porous moisture adsorbing materials that hold the moisture in the pores until they are regenerated by electric heat, air purging, or both.

5.4.6 Pressure Regulating Valves

Pressure regulating valves are used to supply small volumes of air to various pneumatic equipment at a pressure lower than the system pressure. Pressure regulating valves are not considered to be safety devices.

5.4.7 Pressure Relief Valves

As a safety precaution, a pressure relief valve is required in every compressed air system ahead of the first point that could conceivably act as an air flow restriction. This includes shutoff valves, check valves, and even in-line filters since they could clog. Receiver tanks also should have a relief valve installed on the tank with no restrictions between the tank and the valve. If there are no restrictions in the discharge line between the compressor and the receiver tank, the relief valve mounted on the receiver tank is sufficient to protect the system. **The relief valve should be set to open at no higher than the maximum allowable working pressure of the pressure retaining item and periodically checked for proper operation.** It should be noted that pressure regulators are not acceptable for protection against excessive system pressure as they do not vent air, but regulate pressure by restricting air flow.

5.4.8 Receiver Tanks and Other Pressure Vessels

Receivers perform several functions in a compressed air system. The receiver dampens pulsations from reciprocating compressors, acts as a reservoir to take care of temporary demands in excess of compressor capacity, and prevents frequent loading and unloading of the compressor. The receiver may also act as a separator. Since the air is cooled and its velocity reduced, some of the moisture still in the air will condense and fall to the bottom of the receiver where it can be removed by a trap or manual valve. If moisture is not drained, it can lead to corrosion of the receiver.

Air receivers and governor accumulator tanks are examples of pressure vessels found in Reclamation plants. Periodic inspection is required to ensure that pressure vessels are in safe operating condition. *Reclamation Safety and Health Standards* (RSHS), section 17.12, requires the inspection of all pressure vessels

every 5 years. FIST Volume 2-9, *Inspection of Unfired Pressure Vessels*, provides inspection and testing guidelines for pressure vessels.

5.5 Inspection Checklist

Equipment	Recommended Interval	Reference
1. Foundation	Annual	Reclamation Practice
2. Frame	Annual	Reclamation Practice
3. Compressor Drive	Weekly, Annual	Reclamation Practice
4. Cooling System	Weekly, Annual	Reclamation Practice
5. Air Intake and Filter	Weekly, Monthly	Reclamation Practice
6. Piping and Valve	Annual	Reclamation Practice
7. Aftercoolers	Not Scheduled	Reclamation Practice
8. Separators	Not Scheduled	Reclamation Practice
9. Traps	Weekly, Annual	Reclamation Practice
10. Dryers	Annual	Reclamation Practice
11. Pressure Regulating Valves	Annual	Reclamation Practice
12. Pressure Relief Valves	Annual, 5 Years	FIST 2-9, section 3
13. Receiver Tanks	Weekly, Annual, 5 Years	FIST 2-9; RSHS, section 17.12
14. Gauges	Weekly, Biannual	Reclamation Practice
15. Pressure and Temperature Switches	Monthly, Annual	Reclamation Practice
16. Unloader	Monthly, Annual	Reclamation Practice
17. Bearings	Annual, Not Scheduled	Reclamation Practice
Reciprocating Compressors		
18. Lubrication	Weekly, Annual	Reclamation Practice
19. Packing Gland	Annual, Not Scheduled	Reclamation Practice
20. Crosshead	Weekly, Annual	Reclamation Practice
21. Cylinder	Not Scheduled	Reclamation Practice
22. Piston	Not Scheduled	Reclamation Practice
23. Connecting Rod	Not Scheduled	Reclamation Practice
24. Intake and Discharge Valves	Not Scheduled	Reclamation Practice
Rotary Screw Compressors		
25. Air End	Not Scheduled	Reclamation Practice
26. Oil Reservoir and Separator	Weekly, Annual	Reclamation Practice
27. Oil Filter	Annual	Reclamation Practice

5.6 General

1. *Foundation*

   Annual. Examine concrete for cracks and spalling.

2. *Frame*

   Annual. Examine metal for corrosion and cracks. Clean and paint as required.

3. *Compressor Drive*

   Weekly. Check v-belts for slippage, chains for looseness, and shaft couplings for excessive runout or vibration. Dress or tighten v-belts as required. Tighten coupling bolts and lubricate coupling as required.

   Annual. Check v-belts for signs of wear or aging and replace as needed. Check shaft runout of direct coupled machines with dial indicator and check shaft alignment if runout is excessive.

4. *Cooling System*

   Weekly. Check flow of water or coolant through compressor and aftercooler. Check for accumulation of dirt and lint on cooling fins of air-cooled compressors and radiators or water-cooled compressors.

   Annual. Check for corrosion and scale buildup and clean or flush as required. Thoroughly clean cooling fins of air-cooled compressors and radiators of water-cooled compressors.

5. *Air Intake*

   Weekly. Check condition of filter and intake for obstructions. Replace filter as required.

6. *Piping and Valves*

   Annual. Check piping for corrosion. Clean and repaint or replace piping as required. Repack and reseat valves as required.

7. *Aftercoolers*

   Not Scheduled. Check for leaks and for adequate water flow. Disassemble and check for internal corrosion and scale buildup. Clean as required.

8. *Separators*

   Not Scheduled. Check for leaks. Disassemble and check for corrosion and scale buildup. Clean as required.

9. *Traps*

   Weekly. Operate manual drains.

   Annual. Check automatic traps for leaks and proper operation. Clean strainer and check for corrosion or scale buildup.

10. Dryers

Annual. Replace dryer elements as required on deliquescent dryers. Check operation of refrigerated and desiccant types.

11. Pressure Regulating Valves

Annual. Check operation and verify that regulating valves are providing correct pressure downstream from valve.

12. Pressure Relief Valves

Annual. Verify operation and setting. **Nameplate setting shall be no higher than the maximum allowable working pressure (MAWP) marked on the pressure retaining item.** While standards require that the pressure relief valve shall prevent the system pressure from exceeding MAWP by more than 10 percent, the set point of the relief valve must not exceed the MAWP. The relief valve will open at the set pressure, but system pressure may exceed the MAWP by no more than 10 percent with the relief valve operating. Check for signs of leaking, rust or corrosion, deposits, or mineral buildup.

5 Years. Perform operational test of relief valve either in service or remove and perform test on test stand. If a valve is found to be not functioning properly, the system immediately should be taken out of service until the valve can be repaired or a new valve can be installed. The relief valve setting should not be changed by plant personnel. The setting of a pressure relief valve can only be certified by an accredited repair facility.

13. Receiver Tanks and Other Pressure Vessels

Weekly. On air receiver tanks, open the receiver drain valve and blow down until water is removed from tank. Check for leaks on all pressure vessels.

Annual. Make thorough inspection of exterior of the tank, paying close attention to joints, seams, and fittings.

5 Years. All receiver tanks are to be inspected in accordance with the National Board Inspection Code per *Reclamation Safety and Health Standards*, section 17.12. The inspection interval shall not exceed 5 years. The inspection should be performed by a qualified inspector as outlined in the National Board Inspection Code or in accordance with Reclamation's FIST Volume 2-9, *Inspection of Unfired Pressure Vessels.*

14. Gauges

Weekly. Check operation of gauge. Look for loose or stuck pointer. If there is any doubt about the accuracy of gauge, remove and check calibration or replace with new gauge.

Biannual. Remove gauge and calibrate. Make any necessary repairs or replace with new gauge if gauge is not repairable.

15. Pressure and Temperature Switches

Monthly. See that pressure switches cut in and out at proper pressures. Check setting of temperature switches.

Annual. Check switch calibration and set points.

16. Unloader

Monthly. Check that compressor is not being loaded until operating speed is reached in starting and that it unloads at the proper pressure.

Annual. Inspect valves and air lines for leaks and valves for proper seating. Lap valves if required. Examine solenoid for deteriorated insulation or loose connections.

17. Bearings

Weekly. Check antifriction bearing for excessive vibration or noise and schedule replacement as required. Check for adequate lubrication.

Not Scheduled. Disassemble compressor and inspect condition of all bushings and babbitt-lined bearings. Repair or replace as required.

5.7 Reciprocating Compressors

18. Lubrication

Weekly. Check that oil or grease cups are full and that crank case oil is at proper level. Replace or add the correct lubricant to bring to proper levels in crankcase or oil reservoir. Check oil feed rate to cylinder. Check forced oil systems for proper operation. Note any leaks and repair if excessive.

Annual. Clean oil or grease cups and piping. Check condition of lubricant and change if required.

19. Packing Gland

Weekly. Check for excessive leakage and for scoring on piston rod. Adjust packing as necessary.

Annual. Replace packing as necessary.

20. Crosshead

Weekly. If visible, check fit and lubrication.

Annual. Check bearing shoes for scoring and wear and fit to crosshead. Shim shoes if necessary to obtain proper fit. Check pin and bushing for wear and replace or refit as required.

21. Cylinder

Not Scheduled. Check cylinder walls for wear and scoring. Measure inside diameters at top, bottom, and middle in two directions, 90 degrees apart. If cylinder is out-of-round or oversized, rebore cylinder.

22. Piston

Not Scheduled. Check piston for wear. Check clearance with micrometer. Examine rings for tightness and fit. Replace if necessary. Check piston rod for trueness and scoring or wear. Renew or replace as required.

23. Connecting Rod

Not Scheduled. Check for distortion or bending. Check bearing bolts and nuts for damage and replace as required.

24. Intake and Discharge Valves

Not Scheduled. Inspect valves and seats for scoring and proper seating. Clean any deposits off of seats and valve plates, being very careful not to scratch the surfaces. Lap valve seats if there are any imperfections. Deposits on the valves indicate a dirty intake, the wrong type or excessive oil, or a leaking valve or valve gasket.

5.8 Rotary Screw Compressors

25. Air End

Not Scheduled. Check condition of rotors and bearings. Replace if worn or if compressor efficiency has decreased noticeably.

26. Oil Reservoir and Separator

Monthly. Drain condensation from bottom of oil reservoir.

Annual. Check condition of separator element and service or replace if oil consumption is excessive.

27. Oil Filter

Annual. Replace or clean oil filter as required.

6. Cranes, Hoists, Rigging Equipment, and Elevators

6.1 General

Due to the potential for injury to personnel and damage to equipment, the inspection and maintenance of cranes and hoists is very important. A preventive maintenance and inspection program based on Government and Reclamation regulations, manufacturer's recommendations, and applicable industry standards is required for all cranes, hoists, or other lifting devices. This program should be well documented with detailed records of the inspections and maintenance performed on the equipment.

6.2 Standards and References

Section 19 of *Reclamation Safety and Health Standards* lists recommended safety practices for crane and hoisting equipment for Reclamation forces. There are two national organizations that also set laws and regulate safe crane and hoist safety practices. The Occupational Safety and Health Administration (OSHA) and the American National Standards Institute publish the following regulations and standards that are applicable to crane safety and setting up an inspection and maintenance program for cranes and hoists.

6.2.1 Reclamation Standards

- *Reclamation Safety and Health Standards*, section 18, section 19, and appendices D through F.

6.2.2 OSHA Regulations

OSHA publishes its laws and regulations in the Code of Federal Regulations (CFR) (29 CFR). OSHA crane standards are divided in to three different parts: General Industry (Part 1910), Construction (Part 1926), and Maritime (Parts 1917 and 1918). The relevant standard(s) should be used for the type of activity being performed. Applicable sections pertaining to cranes and hoists are:

- 1910.179 "Overhead and Gantry Cranes"
- 1910.180 "Crawler, Locomotive, and Truck Cranes"
- 1910.181 "Derricks"
- 1910.184 "Slings"
- 1926.251 "Rigging Equipment for Material Handling"
- 1926.550 "Cranes and Derricks"
- 1926.753 "Hoisting and Rigging"

OSHA regulations are law and require strict compliance.

6.2.3 ANSI/ASME Standards

Some of the more commonly used standards for cranes found in power and pumping plants are:

- ANSI/ASME B30.2 "Overhead and Gantry Cranes (Top Running Bridge, Single or Multiple Girder, Top Running Trolley Hoist)"
- ANSI/ASME B30.5 "Mobile and Locomotive Cranes"
- ANSI/ASME B30.7 "Base-Mounted Drum Hoists"
- ANSI/ASME B30.9 "Slings"
- ANSI/ASME B30.10 "Hooks"
- ANSI/ASME B30.11 "Monorails and Underhung Cranes"
- ANSI/ASME B30.16 "Overhead Hoists (Underhung)"
- ANSI/ASME B30.17 "Overhead and Gantry Cranes (Top Running Bridge, Single Girder, Underhung Hoist)"
- ANSI/ASME B30.19 "Cableways"
- ANSI/ASME B30.20 "Below-the-Hook Lifting Devices"
- ANSI/ASME B30.21 "Manually Lever Operated Hoists"
- ANSI/ASME B30.22 "Articulating Boom Cranes"
- ANSI/ASME B30.23 " Personnel Lifting Systems"
- ANSI/ASME B30.26 "Rigging"

Although adherence to ANSI/ASME rules and regulations are voluntary, their authority sets legal precedence.

Certain States also have agencies to control safety practices of cranes and hoists. The States of California and Washington require adherence to the California Occupational Safety and Health Regulations (CAL/OSHA) and the Washington Industrial Safety and Health Administration (WISHA), respectively. Other States are working on creating similar agencies. States with agencies such as CAL/OSHA often require adherence to the ANSI/ASME B30 documents; thus, they become law in those States.

The laws and standards and regulations for the different authorities vary considerably and are changed or revised on a frequent basis.

Reclamation's policy is that if there is a difference between any provisions of these laws, standards and regulations, State plans, or manufacturer's instructions, the more stringent provision will apply.

6.3 New Versus Existing Cranes

New cranes constructed, installed, inspected, tested, operated, and maintained shall conform to the requirements of the latest requirements of set standards and regulations. It is not the intent that older, existing cranes necessarily be retrofitted to meet current standards; however, when an item is being modified, its requirements shall be reviewed relative to the latest standards and regulations. The need to meet the current requirement shall be evaluated by a qualified person. Cranes are required to be compliant with the accepted standard used at the time of its installation. The user should recognize that sometimes upgrades or retrofits to older and existing cranes may be prudent to perform, if for no other reason than to protect personnel using the crane, the crane equipment, and the user from legal liability.

6.4 Crane Types

This chapter summarizes operation, maintenance, inspection, and testing recommendations for common overhead and gantry cranes, hoists, rigging, wire rope and slings, and rigging hardware. The O&M requirements for cranes, rigging, and other accessories vary depending on the type of crane, hoisting equipment, or component. Due to the extreme variation in types of crane and hoisting equipment available and the infrequency that some of these types would be found in power and pumping plant facilities, this document will not at this time describe safety and maintenance requirements and techniques for less commonly used crane types. Included in this list are mobile and locomotive cranes; portal, tower, and pillar cranes; floating cranes and derricks; material and personnel hoists; manlifts; draglines; A-frame trucks; and similar machines. For specific requirements and regulations regarding this equipment, the user should reference *Reclamation Safety and Health Standards*, OSHA 1910, the related ANSI/ASME standard as described in section 6.2, specific State regulations and guidelines, and the manufacturer's instructions for that piece of equipment.

6.5 Inspections

Crane inspections are required at regular intervals. Inspection requirements are derived and defined in detail in *Reclamation Safety and Health Standards*, OSHA 1910, ANSI B30, State regulations, manufacturer's recommendations, and the rigging standards. Specific types of inspections are required on all cranes and hoists at prescribed intervals. The inspection criteria and interval differ between authorities and the duty cycle of the crane or hoist. For a more complete description of inspection techniques, requirements, and frequency, refer to the pertinent documents stated above for the type of equipment at your site. Each facility should develop an inspection program for each individual crane, hoist, fixture, and rigging that is based on the manufacturer's recommendations and all applicable standards. The nature of the critical components of the equipment and the degree of service that the piece of equipment is exposed to shall be taken into

consideration in determining inspection frequency. Inspection procedures should state the acceptance criteria for inspections and tests and shall be specific for the applicable make and model of crane. Inspections must be conducted by "designated personnel." These are people who are selected or assigned by the employer as being qualified to perform these specific duties.

The inspections in this section describe mandatory inspection requirements. Inspection procedures for cranes in regular service are based upon the intervals at which inspections should be performed. The intervals, in turn, are dependent upon the nature of the critical components of the crane and the degree of their exposure to wear, deterioration, or malfunction. The general classifications of inspections are designated as "initial," "startup and daily," "frequent," and "periodic."

1. *Initial Inspections*

   Prior to use, all new, altered, modified, or repaired cranes shall be inspected[3] by a designated person in accordance with a written procedure. Inspections of repaired, altered, and modified cranes may be limited to the provisions affected by the alteration, repair, or modification as determined by a qualified person. Dated and signed inspection reports shall be kept on file and shall be readily available. The inspection shall include the following functions: (1) hoisting and lowering, (2) trolley travel, (3) bridge travel, and (4) limit switches and locking and safety devices.

2. *Startup and Daily Inspection*

   On each shift, before operating the crane, the operator shall perform the following operations:

   a. Test All Controls. Any controls that do not operate properly should be adjusted or repaired prior to the start of any operation.[4]

   b. Verify Operation of the Primary Upper-Limit Switch. The trip-setting of the primary upper limit switches shall be checked under no load conditions by inching the block into the limit (running at slow speed).[5]

   c. Visually Inspect Ropes and Load Chains. These visual observations should be concerned with discovering gross damage that may be a hazard.[6]

   d. Inspect hooks and latches for deformation, chemical damage, cracks, and wear.[7]

   e. Ensure inspections (wire rope, chains, and crane) are current via inspection sticker or other documentation.

---

[3] OSHA 1910.179 (j) (1) (i), OSHA 1910.179 (k) (1) (i).

[4] OSHA 1910.179 (j) (2) (i).

[5] OSHA 1910.179 (n) (4) (i).

[6] OSHA 1910.179 (n) (3) (ii)(a).

[7] *Reclamation Safety and Health Standards*, attachment 19-1.

Each day that the crane is in use, the operator shall also inspect the following:

a. Check that motions are smooth and regular with no hesitations, vibration, binding, weaving, unusual noise, or other irregularity.

b. Check for deterioration or leakage in lines, tanks, valves, drain pumps, and other parts of air or hydraulic systems.[8]

Reclamation requires daily inspections prior to operation or inspections prior to each shift.[9]

3. *Frequent Inspections*

A visual inspection by the user or other designated person with records not required to be maintained.

a. Normal service – monthly

   Operating at less than 85 percent of rated load and not more than 10 lift cycles per hour except for isolated instances.

b. Heavy service – weekly to monthly

   Operating at 85 to 100 percent of rated load or in excess of 10 lift cycles per hour as a regular specified procedure.

c. Severe service – daily

   Operating at normal or heavy service under abnormal operating conditions (i.e., extreme temperatures, corrosive atmospheres)

Cranes that have been idle for 1 month or more but less than 6 months shall have a frequent inspection before being placed back in service.

The operator shall perform the following operations:

a. The inspections shall include all requirements of the "Startup and Daily Inspection."

b. All functional operating mechanisms for excessive wear or damage to components.[10] The operator or designated person should check that crane and hoist motions are smooth and regular for all speed steps, with no hesitations, vibration, binding, weaving, unusual noise, or other irregularity.

[8] OSHA 1910.179 (j) (2) (ii).

[9] *Reclamation Safety and Health Standards*, section 19.2.1, table 19.2.

[10] OSHA 1910.179 (j) (2) (i).

c. Check brake actions and ensure that the brakes are functioning normally and that there is no slippage, excessive play, or binding.[11] Exercise brakes to assure that they are dry.

d. Visually inspect hoist rope or chain reeving for compliance with hoist manufacturer's recommendations.[12] Run out as much of the rope or chain as is necessary to visually examine those portions that flex over sheaves, sprockets, and other areas subject to wear or abrasion. Inspect hoist ropes for proper spooling onto the drums and sheaves. Visually ensure that hoisting ropes and/or chains are in good condition. The hoist chain shall feed smoothly into and away from sprockets. Inspect the chain for excessive wear, twist, distorted links interfering with proper function, or stretch.

e. If the crane is equipped with a lower-limit switch, check the lower-limit switch by slowly moving the block into the switch (no load on hook). The drum should be observed during this operation to ensure that at least two full wraps of wire rope remain on the drum at the lower limit.

f. For a cab-operated crane, check for a charged 10BC (or larger) fire extinguisher and ensure that the extinguisher inspection tag is current.

g. Complete any other inspections that are specific for the crane.

Operators or other designated personnel shall carefully examine each deficiency and determine whether they constitute a safety hazard.[13]

4. *Periodic Inspections*

A thorough inspection by a designated person requiring a record of the inspection as of apparent condition.

a. Normal service – annually

b. Heavy service – annually

c. Severe service – quarterly

A crane that is used infrequently and has been idle for a period of 6 months or more shall receive a periodic inspection before being placed in service. Reclamation requires periodic inspections to be performed at least annually.

A periodic inspection should contain information as described in the checklist that follows:

a. Include pre-inspection safety requirements (e.g., lock and tag requirements) and ensure that the crane is in the proper location for inspection.[14]

[11] OSHA 1910.179 (n) (3) (vii).

[12] OSHA 1910.179 (j) (2) (vii).

[13] OSHA 1910.179 (j) (2).

b. Include inspections recommended by the manufacturer or a qualified engineer.

c. Include items previously listed in "2. Startup and Daily Inspection" and "3. Frequent Inspection" and "5. Monthly Wire Rope Inspection," "6. Monthly Chain Inspection," and "7. Hook Inspection" (requirements for these are included at the end of this section).

d. Require a check of all motion limit devices which interrupt power or cause a warning to be activated, including hoist limit switches and bridge and trolley travel limit switches, for proper performance. To prevent damage, each motion shall be inched or operated at low speed into the limit device with no load on the crane. The actuating mechanism of the limit switch shall be located so that it will trip the switch, under all conditions, in sufficient time to prevent contact of the hook or load block with any part of the trolley or crane.[15]

   Check load limiting devices for proper operation.

e. Require a check of control systems, if applicable, to include electrical apparatus for signs of pitting or any deterioration of visible controller contacts, limit switches, and pushbutton stations.[16] Inspect for dirt, oil, and moisture accumulation.

f. Require a check for leakage in lines, tanks, valves, pumps, and other parts of pneumatic or hydraulic systems. Check reservoirs, air tanks, and gear boxes for proper fluid/pneumatic levels.

g. Require a visual inspection of hooks for cracks; deformation; increased throat opening; twists; damage to hook retaining nuts, collars, or pins; and welds or rivets used to secure the retaining members.[17] Refer to section 6.10, "Overhead and Gantry Cranes," "Hooks" for additional requirements.

h. Require inspection of structural components for deformed, cracked, or corroded members.[18]

i. Require an inspection of structural components for loose bolts or rivets.[19]

j. Require an inspection of foundations and anchorages.

k. Require an inspection for cracked or worn sheaves, drums, and load or idler sprockets for excessive wear.[20]

---

[14] ANSI/ASME B30.2-2.3.2; ANSI/ASME B30.17-2.3.2.

[15] ANSI/ASME B30.17-2.1.3(10).

[16] OSHA 1910.179 (j) (3) (x).

[17] ANSI/ASME B30.10-2.2.1.3.

[18] OSHA 1910.179 (j) (3) (i).

[19] OSHA 1910.179 (j) (3) (ii).

l. Require an inspection of running ropes and/or load chain, including end connections. Refer to the section on hoisting equipment, "Hoist Wire Rope or Load Chain" for additional requirements.

m. Require an inspection of load chain and drive chain sprocket for excessive wear or chain stretch.[21] Refer to the section on Hoisting Equipment, "Hoist Wire Rope or Load Chain" for additional requirements.

n. Require an inspection for worn, cracked, or distorted parts such as pins, bearings, wheels, shafts, gears, rollers, locking and clamping devices, bumpers, and stops.[22]

o. Require a check of brake systems parts, lining, pawls, and ratchets for excessive wear or damage.[23]

p. Require a check of rail alignment and rail condition.

q. Require a check of load, wind, and other indicators over their full range for any significant inaccuracies.[24]

r. Require a check of gasoline, diesel, electric, or other powerplants for improper performance or noncompliance with applicable safety requirements.[25]

s. Check function, warning, and safety labels for legibility.[26]

t. Provide a document on which to record measurements, tests, or examinations.

u. State the acceptance criteria for measurements, tests, and examinations.

v. Provide specific "how to" instructions for any inspection activity that is not "common sense" to qualified inspection personnel.

w. Complete nondestructive examination of hooks and of welds, bearings, or other suspect load-bearing parts when required by the inspector.

5. *Monthly Wire Rope Inspection*

For in-service cranes (overhead and gantry), a monthly documented wire rope inspection is required as well as the requirements for startup and daily, frequent, and periodic inspections.[27] All rope that has been idle for a period of

---

[20] OSHA 1910.179 (j) (3) (iii).

[21] OSHA 1910.179 (j) (3) (viii).

[22] OSHA 1910.179 (j) (3) (iv).

[23] OSHA 1910.179 (j) (3) (v).

[24] OSHA 1910.179 (j) (3) (vi).

[25] OSHA 1910.179 (j) (3) (vii).

[26] ANSI/ASME B30.2-2.1.3 (12); ANSI/ASME B30.17-2.1.3 (11).

[27] OSHA 1910.179 (m) (1).

a month or more due to shutdown or storage of the crane on which it is installed shall be given a *"monthly"* inspection before it is used.[28] Rope that has been out of service for more than 6 months shall have a periodic wire rope inspection before returning to service.

Refer to the section on hoisting equipment, "Hoist Wire Rope or Load Chain," for additional requirements.

6. *Monthly Chain Inspection*

   For in-service cranes (overhead and gantry), a monthly documented load chain inspection is required as well as the requirements for startup and daily, frequent, and periodic inspections.[29]

7. *Monthly Hook Inspection*

   A monthly documented hook inspection is required.[30] Refer to section 6.10, "Overhead and Gantry Cranes," "Hooks," for additional requirements. Hooks with cracks or having more than 15 percent in excess of normal throat opening or more than 10 degrees twist from the plane of the unbent hook shall be removed from service and discarded.

8. *Inspection of Cranes Not in Regular Use*

   Cranes that are out of service shall be inspected before being returned to service. The following identifies inspection requirements for returning cranes to service.

   a. A crane that has been idle more than 1 month, but less than 6 months, shall be given a frequent inspection and a documented monthly hook, rope, or load chain inspection.[31]

   b. A crane that has been idle more than 6 months shall have a periodic inspection, including a documented hook, rope, or load-chain inspection.[32]

   c. Standby cranes shall have a frequent inspection and a documented (equivalent to monthly) hook, rope, or chain inspection every 6 months.[33]

   Cranes that are out of service AND are exempt from inspections shall be tagged out of service in accordance with the facility-specific lock and tag procedure. Standby cranes are not out of service.

9. *Third Party Inspections*

   A third party crane inspection program is not required but is optional and at the discretion of the local organization management.

---

[28] OSHA 1910.179 (m) (2).
[29] OSHA 1910.179 (j) (2) (vi).
[30] OSHA 1910.179 (j) (2) (iii).
[31] OSHA 1910.179 (j) (4) (i).
[32] OSHA 1910.179 (j) (4) (ii).
[33] OSHA 1910.179 (j) (4) (iii).

10. Inspection Records

Inspection reports should be dated, comparable, and kept on file. Inspection records shall be kept throughout the life of the crane. An electronic recordkeeping system may be used. If a computerized maintenance management system (CMMS) such as MAXIMO is used, and maintenance records are not retained in the crane file, the crane file should state where the electronic maintenance records are kept. PO&M Form 194 is an example of an Overhead Crane Inspection Report. This form can be found electronically on Reclamations Intranet at http://intra.usbr.gov/forms/pomforms.html. It or similar forms should be used when conducting inspections that require documentation.

a. ***Initial Inspections.*** An inspection report shall be completed to record data obtained during the inspection. The report shall be signed and dated and kept on file and readily available.

b. ***Pre-use, Daily and Frequent Inspections.*** A written inspection report and record retention is not required. A frequent inspection verification checklist is recommended.

c. ***Periodic Inspections.*** An inspection report shall be completed to record data obtained during the inspection. The report shall be signed and dated by a qualified inspector and kept on file and readily available.

Table 1 better defines these inspection requirements and intervals.

Table 1.—Crane and hoist equipment inspection criteria

When to Inspect	Type of Inspection	Notes
Before initial use – new cranes	Initial inspection	Performed by manufacturer.
Before initial use – altered cranes	Initial inspection	Altered" is defined as any change to the original manufacturer's design configuration—that is, replacement of weight handling equipment, parts, or components with other parts or components. A qualified person must conduct this inspection.
Before initial use on a Reclamation project	Periodic inspection	"Initial use" refers to the first time Reclamation takes possession of and assembles a crane or whenever a non-Reclamation-owned crane is brought onto a jobsite and set up for use.

Table 1.—Crane and hoist equipment inspection criteria (continued)

When to Inspect	Type of Inspection	Notes
Before every operation (shift) Annually or as required by manufacturer (if more frequent)	Startup inspection Periodic inspection	If the hoisting equipment has not been in service, inspect prior to operation. However, do not use the equipment if you have not inspected it in more than 12 months.
Before using a crane which is not in use on a regular basis and which has been idle for more than 1 month but less than 6 months	Frequent inspection	Also inspect running ropes. Annual (periodic) inspection also applies.
Before using a crane that is not used on a regular basis and that has been idle for more than 6 months	Periodic and frequent inspection	Also inspect running ropes.
Standby cranes, at least semi-annually	Frequent inspection	Standby cranes are those not used regularly but are available, on a standby basis for emergencies (e.g., emergency operation and maintenance work); requirements for frequent inspections of standby cranes are in addition to the requirements for an annual (periodic) inspection.

Source: *Reclamation Safety and Health Standards*, Revised 2001; table 19-2.

Table 2 defines relevant OSHA and ANSI/ASME standard references that describe overhead crane and rigging inspection criteria.

Table 2.—Overhead Crane Inspection Standards

Equipment	Interval			
	Daily/Shift	Monthly	Frequent[1]	Periodic[2, 3]
Overhead and Gantry Cranes				
1. Crane Rails and Supports				ANSI/ASME B30.2-2.1.3(b)(1)
2. Hoist, Trolley, and Bridge Framework				ANSI/ASME B30.2-2.1.3(b)(1)
3. Footwalks and Ladders				ANSI/ASME B30.2-2.1.3(b)(2)

Table 2.—Overhead Crane Inspection Standards (continued)

Equipment	Interval			
	Daily/Shift	Monthly	Frequent[1]	Periodic[2, 3]
Overhead and Gantry Cranes (continued)				
4. Stops, Bumpers, Rail Sweeps and Guards				ANSI/ASME B30.2-2.1.3(b)(4)
5. Braking System			ANSI/ASME B30.2-2.1.2(c)(3)	ANSI/ASME B30.2-2.1.3(b)(5)
Electrical Equipment				
6. Controllers	OSHA 1910.179 (j)(2)(i); RSHS 19-1(1)		ANSI/ASME B30.2-2.1.2(c)(1)	ANSI/ASME B30.2-2.1.3(b)(7)
7. Resistors				ANSI/ASME B30.2-2.1.3(b)(9)
8. Hoist-Limit Device	OSHA 1910.179 (n)(4)(i); ANSI/ASME B30.2-3.2.4(a); RSHS 19-Att.1(3)		ANSI/ASME B30.2-2.4.1(b); B30.2-2.1.2(c)(2)	ANSI/ASME B30.2-2.1.3(b)(10)
9. Bridge and Trolley Conductors and Collectors				ANSI/ASME B30.2-2.1.3(b)(9)
Hoisting Equipment				
10. Drum and Sheaves				ANSI/ASME B30.2-2.1.3(b)(3)
11. Wire Ropes	OSHA 1910.179 (j)(2)(vii); RSHS 19-1(17)	OSHA 1910.179 (m)(l)[2]	ANSI/ASME B30.2-2.4.1(a); B30.2-2.1.2(c)(6)	ANSI/ASME B30.2-2.4.1(b)(11)
12. Load Chain	OSHA 1910.179 (j)(2)(iv)	OSHA 1910.179 (j)(2)(iv)[2]		
12. Hooks	OSHA 1910.179 (j)(2)(iii); ANSI/ASME B30.17-2.1.2(c)(4); RSHS 19-1(6)	OSHA 1910.179 (j)(2)(iii)[2]-hooks with cracks or deformation only	ANSI/ASME B30.2-2.1.2(c)(4)	

Table 2.—Overhead Crane Inspection Standards (continued)

Equipment	Interval			
	Daily/Shift	**Monthly**	**Frequent[1]**	**Periodic[2, 3]**
Hoisting Equipment **(continued)**				
13. Inspection Report				ANSI/ASME B30.2-2.1.5
Ropes, Slings, Chains, and Rigging Hardware				
14. Slings	ANSI/ASME B30.9-2.8.1; OSHA 1910.184(d)			ANSI/ASME B30.9-2.8.2; OSHA 1910.184(e)(3) i (alloy steel chain)
15. Rigging Hardware	ANSI/ASME B30.26-1.8.2; 2.8.2; 3.8.2; 4.8.2; 5.8.2			ANSI/ASME B30.26-1.8.3; 2.8.3; 3.8.3; 4.8.3; 5.8.3
16. Below the Hook Lifting Devices			ANSI/ASME B30.20-4.3.1.2(d)	ANSI/ASME B30.20-4.3.1.3(a)
Elevators				
17. Routine and Periodic Inspections	Semiannual, Annual, 5 Years tests and inspections			FIST 2-10; ANSI/ASME 17.1 sections 1001, 1002

[1] Frequent inspections shall also include observations performed during a startup or change in shift pre-operation inspection.

[2] Written certification required to be kept on file.

[3] Periodic inspects also shall incorporate and include the items of a frequent inspection.

6.6 Maintenance

The users of all cranes are required to develop and follow a preventive maintenance program. Cranes are to be maintained in a safe and workable condition. As a minimum, manufacturer's recommendations shall be followed, and they should be the first source of information in developing a comprehensive maintenance plan for that particular piece of equipment. Replacement parts shall be at least equal to the original manufacturer's specifications.

Preventive maintenance shall be performed in accordance with written procedures. Procedures should state specific precautions, such as lockout/tagout requirements. A copy of the PM procedures shall be retained in the crane history file. An electronic recordkeeping system may be used. If a CMMS, such as MAXIMO, is used, and maintenance records are not retained in the crane file, the crane file should state where the electronic maintenance records are kept.

The crane maintenance file is a compilation of various documents and records relating to operation, maintenance, inspection, testing evaluation, and repair of the equipment. The methods selected for establishing adequate information retention and retrieval shall be determined by the equipment custodian.

The crane maintenance file shall contain, as a minimum, the required current dated periodic inspection records and other documentation to provide the user with evidence of a safe and reliable maintenance program. Inspection records should be retained in a format and location that provides for ease in accessibility. Maintenance file information should provide a source for comparing present conditions with past conditions to determine whether existing conditions show a trending pattern of wear, deterioration, or other comparable factors that may compromise safe, continued use of the equipment. Length of record retention shall be determined by the equipment custodian's established maintenance program.

Before maintenance is accomplished, where adjustments and repairs are required, the following precautions shall be taken.

a. The crane shall be run to a location where it will cause the least interference and is most accessible.

b. All controllers shall be checked to assure that they are in the off position.

c. If the equipment is electrically powered, the main or emergency disconnect or switch shall be opened and locked in the open position. The facility specific lockout/tagout procedures shall be strictly followed. Effective isolation of the energy source shall be conducted. If the crane is hydraulic or air powered, hydraulic and air pressure shall be relieved.

d. Effective warning signs, guards, and barriers shall be installed where overhead maintenance work creates a hazard or where interference with another crane or another crane's electrical conductors could occur.

e. Where other cranes are operating on the same runway, rail stops or other means shall be provided to prevent interference with the idle crane or work area.

f. Only trained personnel shall work on energized equipment when adjustments and test are required.

g. After maintenance work is completed and before returning to service:

- Guards shall be reinstalled.
- Safety devices shall be reactivated.
- Replaced parts, tools, rags, and debris shall be removed.

- Maintenance equipment shall be removed.
- All locks and tags shall be cleared and removed.

All hazardous conditions and discrepancies disclosed by inspection or operation shall be corrected before resuming normal operation. Adjustments or replacements of parts shall be made to assure the correct function of all operating mechanisms, including components such as limit switches, control systems, brakes, and motors. The hook, rope, load chain, etc. shall be inspected and repaired or replaced as required.

After maintenance or repair, a pre-operational check shall be performed to verify the proper function of activities such as crane motion controls and interlocks. Special attention shall be given to those areas likely to have been affected by the maintenance or repair.

A closely controlled lubrication plan is required to prevent under- or over-lubrication. Lubrication frequency and lubrication types used in motors, bearings, gear boxes, wire rope, and other lubrication points shall be specified by the responsible engineer inspector or maintenance organization and adhere to the manufacturer's recommendations. If inspection finds over- or under-lubrication, the lubrication method or frequency shall be adjusted.

Sheave bearings, including equalizing sheaves, shall be individually lubricated on a regular schedule. Load blocks that are immersed in water shall have special provisions to prevent lubricant loss. Lubrication frequency and type should be carefully evaluated.

Hoist ropes, except for stainless steel rope (consult manufacturer), shall be lubricated. Again, when ropes are immersed in water, the type of lubricant and frequency shall be adjusted to reduce the loss of lubricant to water.

For motors that require lubrication, a closely controlled lubrication plan is required.

The responsible engineering or maintenance organization should use predictive maintenance practices or tests as necessary to diagnose problems and predict maintenance requirements. Examples of this are the use of scheduled chemical/microscopic lubricant tests and vibration analysis of rotating equipment.

6.7 Testing

6.7.1 Operational Tests

Before initial use, new, reinstalled, altered, repaired, or modified cranes shall be tested by a designated person to ensure that the crane is in good operational condition. Tests shall include:

- Lifting and lowering
- Trolley travel
- Bridge travel
- Limit switches

a. Check the hoist limit device(s), primary and secondary if so equipped, by slowly moving the block into the switch (no load on hook). Then check the hoist limit device(s) at increasing speeds up to maximum speed.

b. The actuating mechanism of the upper-limit device shall be located or adjusted so that it will trip the device in sufficient time to prevent contact of the load block or load with any part of the trolley or bridge.

c. Travel-limiting devices.

d. Locking and indicating devices, if provided.

Operational testing of altered, repaired, and modified cranes may be limited to the functions affected by the alteration, repair, or modification as determined by a qualified person.

Reclamation requires an annual operational test unless the equipment has been out of service; in which case, it may be deferred until the next crane operation.[34]

6.7.2 Periodic Load Tests

Scheduled (Periodic) load tests are not routinely required. Management, at their discretion, may implement a periodic load testing program. The frequency and capacity of such periodic tests shall be set by management. For example, Reclamation requires a load test before any lift where the load is expected to be at least 75 percent of the rated capacity. The test remains valid for 5 years and must be at least 100 percent of rated capacity but not greater than 110 percent.[35]

Rated load tests shall be conducted under the following criteria:

Before initial use, new, reinstalled, altered, repaired, or modified cranes shall be load-tested as determined by a qualified person. Overhead and gantry cranes may be load-tested between 100 percent and 110 percent unless recommended differently by the manufacturer or a qualified person. Rated load tests of altered, repaired, and modified cranes may be limited to the functions affected by the alteration, repair, or modification as determined by a qualified person.

The replacement of load rope and chain is specifically excluded from this load test; however, an operational test is required. Load testing may be required at management's discretion. The crane manufacturer may want to be consulted.

---

[34] *Reclamation Safety and Health Standards*, section 19.2.2 (a).

[35] *Reclamation Safety and Health Standards*, section 19.2.3.

When rope clips or wedge socket end connections are used on a load line, the hoist should be cycled several times with a load no less than the maximum operation load (normally 100 percent of the rated capacity). Next, if rope clips are used, check and retighten nuts to the recommended torque. If a wedge socket is used, verify that the rope is properly seated.

Consult *Reclamation Safety and Health Standards*, attachment 19-2, for further requirements and test procedures.

Load tests shall be performed only after inspection and maintenance of the crane are confirmed as current and any outstanding problems have been addressed. This is usually a good time also to check load limiting devices for accuracy of settings.

The load-test weight should be within tolerance of +0 percent, -5 percent.

After the load test is conducted, the person conducting the test shall prepare a written report on the test. This report shall be signed, dated, and kept on file.

A hook nondestructive examination (NDE) is not routinely required before a load test. If the hooks are to have a NDE, the NDE should be done after the load test.

6.8 Safe Operating Practices

Cranes shall only be operated by qualified designated persons, trainees under direct supervision of a designated person, and/or maintenance and test personnel when necessary. Operators of cab-operated cranes and pulpit-operated cranes shall be required to pass a written or oral examination and shall meet specified physical requirements as outlined in *Reclamation Safety and Health Standards*. When physically or otherwise unfit, an operator shall not operate the equipment.

All controls shall be tested by the operator before beginning a new shift. The operator shall test the brakes each time a load approaching the rated load is handled. The brakes shall be tested by raising the load a few inches and applying the brakes. If any controls do not operate properly, they should be adjusted or repaired prior to the start of operations.

The operator shall be familiar with the crane and its proper care. He shall promptly report any repairs or adjustments that are discovered to the person responsible for the O&M repairs of the crane.

Contact with runway stops or other cranes should be made with extreme caution and care.

Before any maintenance work is performed on the crane, the operator shall lock and tag the main disconnect in the de-energized position. Facility-specific lockout/tagout procedures shall be followed and enforced.

Before leaving a cab-operated crane, the operator shall land any attached load, place controllers in the off position, and open the main disconnect of the crane.

The operator is responsible for those operations under the operator's direct control.

The operator shall respond to signals from the person who is directing the lift or from an appointed signal person. When a signal person is not required as part of the operation, the operator then is responsible for the lifts. However, the operator shall obey a stop signal at all times, no matter who gives it.

While actually operating the crane, the operator shall not engage in any practice that will divert his attention. The operator should not leave his position at the controls while a load is suspended unless specific precautions have been implemented.

The operator shall not close the main disconnect until certain that no worker is on or adjacent to the crane. The operator shall be sure that all controllers are in the off position before closing the main disconnect.

If power goes off during operation, the operator shall immediately place all controllers in the off position.

A warning signal shall be sounded prior to starting bridge travel and when the load or hook approaches near or over people.

Standard hand signals shall be used. Radio communication should be used where hand signals are insufficient. The crane operator and signal person shall always maintain communication.

Outdoor cranes shall be secured after use.

If a wind-indication device is present and alarms, all crane operation shall be immediately discontinued, and the crane shall be prepared and stored for excessive wind conditions.

The crane shall not be loaded beyond its rated load, except for test purposes.

The hoist rope or chain shall be free from all kinks or twists and shall not be wrapped around the load. Multiple part lines shall not be twisted around each other.

The load shall be attached to the block hook by means of slings or other approved devices.

Care shall be taken to make certain that the sling clears all obstacles. The load should not contact any obstructions.

The load shall be well secured and properly balanced in the sling or lifting device before it is lifted. The hook should be centered over the center of gravity of the load in such a manner as to prevent swinging.

The hoist rope should be checked prior to operating to verify that it is seated in the drum grooves and sheaves, especially if there has been a slack condition.

Avoid sudden acceleration or deceleration of the load.

Cranes shall not be used for side pulls, except when specifically authorized by a qualified person.

When practical, tag lines shall be used to control loads.

Personnel shall not ride the load or hook.

The operator shall avoid carrying loads over people.

The load shall not be lowered below the point where less than two full wraps of rope remain on the drum.

When two or more cranes are used to lift a load, one qualified responsible person shall be in charge of the operation.

Operators shall be familiar with the operation and care of the fire extinguisher.

6.9 Critical Lifts

6.9.1 Determination of Critical Lift

A critical lift is a nonroutine lift requiring detailed planning and additional or unusual safety precautions. Reclamation designates critical lifts as those that are determined to be:[36]

a. Lifts made when the load weight is 75 percent or more than the rated capacity of the crane or hoisting device.

b. Lifts made with more than one crane.

c. Hoisting personnel with a crane.

d. Any lift that the crane or hoist operator believes to be critical.

Additional examples of factors that would designate a critical lift would be:

a. If the item being lifted were to be damaged or upset, a significant release of a hazardous material or other undesirable conditions to the environment would occur.

b. The item being lifted is unique and, if damaged, would be irreplaceable or not repairable and is vital to a system or project operation.

c. The cost to replace or repair the item being lifted, or the delay in operations of having the item damaged, would have a significant negative impact on the facility or organization, to the extent that it would affect program commitments.

[36] *Reclamation Safety and Health Standards*, section 19.6.

d. If the load requires exceptional care in handling because of size, weight, close tolerance installation, high susceptibility to damage, or other unusual factors.

The item, although noncritical, is to be lifted above or in close proximity to a critical item or component. An item close to a safety-related component or near concentrations of hazardous energy or chemicals meets this criterion. A mobile crane working near power lines or transmission towers is an example.

6.9.2 Responsibility

The person who has responsibility for the item being lifted has the authority to require that it be handled as a critical lift. In addition, the manager at the facility where the lift will be performed or the safety officer overseeing the facility also has the authority to require that it be handled as a critical lift.

6.9.3 Designated Person

The manager who designates a lift as a critical lift shall ensure that a designated person, other than the crane operator, be assigned to supervise the planning and execution of the critical lift. This designated person also shall ensure that equipment (cranes, hoist, slings, rigging hardware, and below-the-hook lifting devices) are current on all inspections and load tests (if required). He shall ensure that all members of the work teams completely understand the work instruction and revisions of the critical lift.

6.9.4 Critical Lift Plans

A step-by-step plan or work instructions shall be prepared and approved by a technically qualified person. Critical lift plans shall contain the following:

a. Identity of the items(s) to be lifted

b. Exact weight and size of the item and total weight of the load (including all crane and rigging components)

c. Exact information about the sequence of events and procedures, including equipment positioning, height of the lift, and load radius, where applicable

d. Rigging plans and sketch(s) which include the following:

- Lift point identification
- Methods of attachment
- Load angle factors
- Sling angles
- Accessories used

- Rated capacity of the equipment in the configuration(s) in which it is used
- Other factors effecting the equipment capacity

e. Conditions and procedures under which the lifting operation is to be stopped

f. Coordination and communications procedures

g. Names of lift supervisor, crane operator, riggers, and other personnel with key roles in the operation

h. For tandem lifts, general information on the hoisting equipment to ensure the equipment is compatible

i. Ground conditions and other information needed to ensure that a level, stable foundation is available to support the lift.

Other general information that may be required, depending on the situation and equipment used:

a. Special precautions or equipment required, such as sling corner pads, cribbing, etc.

b. A list that specifies each piece of equipment, type, and rated capacity

c. Location of the loads center of gravity

d. Designated check or hold points so job progress can be checked against the plan and the load inspected

e. A load-path sketch that shows the load path and height at key points

f. A sketch indicating lifting at travel speed limitations

g. A signoff sheet to verify that equipment and hardware inspections and tests are current

Practice lifts may be beneficial in certain circumstances. (If used, the practice lift should be documented in the plan).

6.9.5 Critical Lift Plan Approval

All personnel involved in the lift should review, sign, and date the critical lift plan. Others who should approve and sign the plan, depending on the situation are:

a. The manager responsible for the item to be lifted

b. The technical approver

c. Qualified engineer

d. Safety officer in charge

6.9.6 Prelift Meeting

Before performing a critical lift, immediately following a field revision, or prior to initiating a change in the critical lift, participating personnel shall meet to accomplish the following:

a. Review the critical lift plan or revision

b. Discuss any hazards, controls, hold points, unique conditions, and emergency contingencies.

c. Coordinate with each other and other work groups

d. Resolve any questions before beginning work

e. Sign the critical lift plan

6.9.7 Documentation

Documentation of a critical lift shall include the following:

a. The critical lift plan, recording job completion, hold point signoffs, and approval signatures, as applicable

b. Documentation of the prelift meeting, meeting date, and list of attendees

c. Any additional documentation deemed appropriate

The designated person or other assigned person shall retain meeting documentation until the lift is satisfactorily completed. When the job is finished, he shall forward the critical lift documentation to the manager for whom the lift was done.

6.10 Overhead and Gantry Cranes

6.10.1 General

This section applies to overhead and gantry cranes; semi-gantry, cantilever, and wall cranes; storage bridge cranes; and all other cranes that have trolleys and similar travel characteristics.

6.10.2 Modifications

Modifications, additions, or major repairs shall not be made except by the manufacturer, with his written approval, or by the approval of a professional engineer. Any crane that has been modified or rerated so that its load-supporting components, capacity, or operation has been

modified shall be retested in accordance with the testing portion of this section. The new rated load shall be shown on the crane.

6.10.3 Rated Load Marking

The rated load of the crane should be marked on each side of crane. If the crane has more than one hoist, each hoist shall have its rated load marked on its load block. Markings shall be large enough to be legible from the ground or floor.

6.10.4 Hand Signal Posting

Figures demonstrating standard hand signals for controlling crane operations shall be posted conspicuously at the operator's position and, as practical, at signal control points and other locations where necessary.[37]

6.10.5 Outdoor Cranes

New outdoor storage cranes require automatic rail clamps and a wind indicating device.

6.10.6 General Construction

Crane installations and equipment must be designed by the manufacturer or a professional engineer. Crane runways and supporting structures shall be designed to withstand the loads and forces imposed by the crane. A minimum clearance of 3 inches overhead and 2 inches laterally shall be provided and maintained between the crane and any obstructions. The cab shall also have a 3-inch minimum clearance from any obstruction within its possible movement.

6.10.7 Maintenance and Inspection Requirements

Unless there is justification to do otherwise, the manufacturer's recommendations shall be followed. The following are recommended maintenance and inspection practices.

1. *Crane Rails and Supports*

   Frequent Inspections. Check for abnormal vibration or skewing in the crane support structure or bracing and the crane rails when operating.

   Periodic Inspections. Check crane rails for alignment and level. Look for dips, cleanness, grease, or oil. Bridge rails should be straight. Inspect welds if welded clips or welded rail is used. Check that expansion gaps in splice joints are evenly spaced and not so large as to cause vertical movement when the wheel passes over it. Refer to manufacturer's specifications for spacing tolerances. Look for wear patterns on the rail, both on the top and side of the rail head. Clean rails if significantly dirty. Packed debris on the rail head can lead to jerky crane motion. Check concrete rail supports for cracking or spalling and check steel supports for

[37] *Reclamation Safety and Health Standards*, section 19.5.9 b.

corrosion and loose bolts or rivets. Repair concrete as required. Tighten loose bolts and rivets. Check that rail stops are securely fastened.

2. *Hoist, Trolley, and Bridge Framework*

Frequent Inspections. Check for abnormal vibration or skewing in the crane structure or bracing when operating.

Periodic Inspections. Check all framework for deformation, cracks, and corrosion, paying close attention to load bearing members and welded joints. Look for structural problems, especially in the corners and on long spans. Check for evidence of skewing. Skewing will occur between end-truck cross members and bridge girders and sometimes can be seen on the inside corners. On fixed cranes, check column anchorage and supports for deformed bolts or concrete cracks in the foundation. Check bolts and rivets for tightness. Clean and repaint as required.

3. *Cabs*

Access shall be by fixed ladder, stair, or platform requiring no step over any gap exceeding 12 inches. Outdoor cabs should be enclosed. All cab glazing shall be safety glass. All cabs shall have an emergency means of egress. A portable fire extinguisher is required to be installed in every cab. A 2A: 40-B: C rating is required.[38] Carbon tetrachloride extinguishers are not allowed.

Frequent Inspections. Tools, oil cans, extra fuses, and other articles shall be stored in the tool box and should not lie loose in or about the cab. Check for adequate cab lighting. Replace failed bulbs. Dispose of oily rags and trash.

Periodic Inspections. Check for broken windows or doors. Check guardrails and doors. Check bolts and rivets for tightness. Check welded joints for cracks. Look for corrosion of steel member. Cab housekeeping should be maintained. Tools, oil cans, rags, and other parts shall be stored in fire-resistant toolboxes. Vacuum the cab and clean controls. Paint as required. Verify that the fire extinguisher is full.

4. *Footwalks and Ladders*

Footwalks shall be rigid with an antislip type walking surface. Wooden footwalks are allowed. Ladders, toeboards, and handrails shall be permanent, be securely fastened in place, and be OSHA compliant. Ladders shall extend from the ground or floor to the cab platform or footwalk. If headroom is sufficient, a footwalk shall be included on the drive side along the entire length of the bridge of all cranes having a trolley running on top of the girders.

Frequent Inspections. Check that footwalks are clean of trash, debris, and oil. Be cognizant of unsafe conditions such as loose railing, toeboards, or walking surfaces and repair if required.

[38] *Reclamation Safety and Health Standards*, section 19.9.8.

Periodic Inspections. Check handrails and ladders. Verify compliance to codes. Check bolts and rivets for tightness. Check ladder rungs and stairs for significant wear of antislip surfaces. Check welded joints for cracks. Check that toeboards are secure. If wooden footwalks are used, verify that the wood is in good condition and the surface is slip-resistant. Look for corrosion of steel member or cracked welds. Clean and paint as required.

5. *Stops, Bumpers, Rail Sweeps, and Guards*

Stops shall be provided at the limits of trolley travel and shall be fastened to resist forces applied when contacted by the bumpers.

All power-operated bridges and trolleys are required to have bumpers. They should be energy-absorbing (or energy-dissipating) and designed specifically for stopping the bridge or trolley, even with loss of power. Bumpers shall be equipped so as to minimize parts falling from the crane in case of breakage or age.

When more than one bridge or trolley is mounted on the same runway, bumpers shall be provided between adjacent bridge or trolley ends.

Rail sweeps are required in front of the leading wheels on both ends of the trolley end truck. Their purpose is to clear the rail of objects on the bridge which, if caught between the wheel and rail, could damage or derail the wheel. Clearance between the top surface of the rail and the bottom of the sweep should not exceed 3/16 inch. Rail sweeps should extend below the top of the rail. Side clearance should be equal to the crane float plus 3/16 inch.

Guards are required over all exposed moving parts, such as gears, set screws, keys, drive chains, and sprocket that present a hazard under normal operating conditions. Guards are required to be substantially constructed so that they cannot deform and make contact with moving parts or live electrical parts. A guard should be provided between exposed bridge conductors and hoisting ropes if it is possible that they could come into contact. Guards are also required if hoisting ropes run near enough to other parts to make chafing or fouling possible.

Frequent Inspections. Visually inspect the area of oil-filled bumpers for indications of oil leakage. Visually inspect for missing guards.

Periodic Inspections. Inspect stops and bumpers for wear, cracks, corrosion, or distortion. Check for looseness and proper positioning. Check for leaking of hydraulic bumpers and fill to proper level. Check rubber or plastic bumpers for cracks or other damage. Check mounting connections for tightness and signs of shear. Replace or repair as required. Adjust rail sweeps if required. Verify that all guards are in place and securely fastened. Verify that bridge and trolley bumpers have a safety chain or cable in place that will keep the bumper from falling if mounting connections break.

6. Braking System

Hoist Brakes.—Each hoist unit is required to have at least one self-setting (holding) brake that applies directly to the motor shaft or some part of the gear train. Hoist holding brakes shall apply automatically when power to the brake is removed. Also, hoist holding brakes shall be provided with brake adjusters to adjust for lining wear. The wear surface of all drum and disc brakes shall be smooth. Brakes should not overheat under general service conditions.

Each hoist unit greater than 1 ton (except specifically designed worm gear hoists) is required to have at least one control brake to prevent overspeed. Braking means can be electrical, mechanical, hydraulic, or worm-gear. Brakes should not overheat under general service conditions.

Hand-operated hoists shall be designed to automatically stop and hold a test load up to 125 percent of the rated load, when the actuating force is removed.

Trolley and Bridge Brakes.—Each power-driven bridge and trolley unit of the crane shall be equipped with either a braking means or have frictional characteristics that will provide stopping and holding. Brakes should not overheat under general service conditions.

Brakes may be mechanical, electrical, pneumatic, hydraulic, or gravitational. They shall have a means for adjustment to compensate for wear. The wear surface of all drum and disc brakes shall be smooth. Foot-operated brakes shall require not more than 70 pounds to apply and be equipped with means for positive release when force is taken off the pedal.

Brake pedals, latches, and levers should allow release with less force than was used to apply the brake.

When provided, a parking brake shall:

- Be applied either automatically or manually
- Impede horizontal motion as required by ANSI/ASME standards
- Not prohibit the use of a drift point in the control circuitry

When provided, a service brake shall:

- Be applied manually by the operator
- Stop trolley or bridge travel as required by ANSI/ASME standards

When provided, a drag brake shall provide a continuous retarding torque without external control.

When provided, an emergency brake shall:

- Be applied when initiated by the operator or automatically upon loss of power

- Stop trolley or bridge travel as required by ANSI/ASME standards
- Impede horizontal motion as required by ANSI/ASME standards

Frequent Inspections. Check operation of bridge and trolley brakes and look for leaks in hydraulic lines. Before proceeding with a lift, lift load a few inches and check that hoist brakes are holding. Be conscientious to unusual smoke or smell that might indicate overheating or burning of linings.

Periodic Inspections. Check brake lining for excessive wear and oil contamination. Inspect for signs of heating. Check linings of shoes and pads for asbestos. Replace any asbestos linings with a non-asbestos type. Check brake drums for scoring. Check for smooth drums and uneven wear patterns. Measure and record clearance and shoe thickness. Check operating mechanisms for wear or damage, adequate lubrication, and proper adjustment. Repair or replace parts as required. Check operation of load control braking system. Verify that hoist brakes will hold load with loss of power. Clean dust and dirt from brakes. Always wear a dust mask for this work. Inspect brake drums and flanges for cracks and signs of heating. Look for broken or damaged springs. Lubricate pivot points lightly. Foot brake pedals shall be clean and properly maintained so that the operator's foot will not easily slip off the pedal.

7. *Trolley and Bridge Motors, Gear Boxes, and Shafts*

Motors should be routinely tested. Refer to FIST 4-1-B, *Maintenance Scheduling for Electrical Equipment,* section 24, for electrical test requirements.

Frequent Inspections. Listen for abnormal noise in gear boxes and motors which may be indicative of motor or gear box bearing problems.

Periodic Inspections. Open covers and check oil levels. If the facility has an oil sampling program, draw an oil sample for testing. Prior to adding lubricant, verify the proper lubricant required. Only lubricants that comply with the manufacturer's specification should be used. Inspect oil and gear boxes for metal and nonmetal particles. Check seals on gear boxes for leaks. Clean oil leakage and replace seals if required. Inspect gears for missing or worn teeth or abnormal wear patterns on teeth. Look for signs of heat (discoloration). Grease bearings on shafts where grease zerks are present. Do not overgrease. Inspect shafts and couplings. Make sure that bolts are tight and no slippage has occurred. Verify that all protective guards are in place and secure.

Check motor brushes for wear and slip rings for pitting. Examine brushes for length and fit. Replace one at a time if badly worn. Inspect commutators for wear, flat spots, high bars discoloration, or ridging. Never touch the commutator with your finger. Check connections to brushes. Look for signs of excessive heat. Re-torque to manufacturer's recommendations as required.

Vacuum away carbon dust produced from brush wear. Clean motor air intake screens. Using air, blow dirt out of the interior windings of the motor if required. Grease bearings if not of the sealed type.

8. *Electrical Equipment*

Wiring and equipment shall comply with the requirements of the National Electric Code, National Fire Protection Association (NFPA) 70, Article 610, "Cranes and Hoists." Crane control voltage shall be less than 600 volts (V) ac or dc. Pendent control voltage shall not exceed 150 V ac or 300 V for dc.

All electrical equipment shall be located or enclosed so that, under normal operating conditions, contact with energized parts cannot occur. Electrical equipment shall be protected from dirt, grease, oil, and moisture. Cabinet interiors should be cleaned during annual maintenance, if required.

Controllers.—Cranes that are not equipped with spring-return controllers or momentary contact pushbuttons shall be provided with a device which will disconnect all motors from the line on power failure and will not permit any motor to restart until the controller handle is brought to the "off" position or a reset is operated.

All controls and switches should be labeled as to their function. Each crane control shall be marked to indicate the direction of the resultant motion. Arrangements of cab, pendent, and radio controls should conform to the requirements of ANSI/ASME B30.2.

Pendant control stations shall be constructed to prevent electrical shock. Only commercially manufactured pendants shall be used. Where multiple conductor cable is used, the station's electrical conductors will be provided with some type of strain support. Push buttons on pendant stations shall have a spring return to the off position when pressure is released. The spring return force shall be the minimum necessary for positive return.

For cab cranes, the lever-operated manual controller and switch shall be provided with a spring-return and off-point detent or latch. With floor-operated cranes, the controllers, if rope operated, shall also automatically return to the off position when released by the operator.

Radio- or remote-operated cranes shall function so that, on loss of control signal for any crane motion, the crane motion shall stop. Signals from any source other than the transmitter shall not result in operation of motion.

Frequent Inspections. Check control levers and pushbuttons for misadjustments, free movement, and for any obstruction that could interfere with proper operation. Check that the controller returns to the off position when the lever is released. Check for excessive wear and contamination by lubricants or other foreign matter. Controls shall be kept clean, and function labels shall be kept legible.

Periodic Inspections. Check controller contacts for signs of pitting or any other deterioration. Examine the controller for burned contacts or signs of overheating. Check for excessive wear or looseness of control levers. Vacuum and clean the controller if contaminated with dust and dirt. Lubricate moving parts as needed. Check strain relief on pendent. Check that required control markings are displayed and legible.

Resistor Banks.—Resistors shall have openings to provide adequate ventilation. They shall be made to prevent molten metal from falling on the operator or from the crane. If enclosed, they shall be installed so that the accumulation of combustible matter is minimized.

Frequent Inspections. Nothing required.

Periodic Inspections. Visually examine resistor tubes for cracks, loose bands and connections, and broken resistance wire. Clean resistor banks if dirty.

Switches.—The power to the runway conductors shall have a switch or circuit breaker accessible from the floor and lockable in the open position. On cranes with cabs, an enclosed switch or breaker with provisions for locking in the open position shall be provided in the leads from the runway conductor. A means of opening the switch or breaker shall be located within easy reach of the operator. When the operator opens this switch or circuit breaker, the holding brake(s) shall set.

On floor remote or pulpit-operated cranes, a lockable switch or enclosed type circuit breaker shall be provided in the leads from the runway conductors and shall be located on the bridge or footwalk near the runway collectors. It shall be able to be locked in the open position. A means to open the switch with a magnetic contactor controlled from the operators station shall be provided. This provides for emergency shutdown of all power to the crane.

Over-travel Protection.—Hoists shall have an upper limit switch to prevent travel of the load block beyond the limit of travel.[39] On wire rope hoists, if a geared or other limit switch or device that operates in relation to drum turns is used, a second limit switch that operates independent of drum rotations shall be provided. Cranes with powered hoists shall not be installed where, during normal operating conditions, the hook can be lowered to a point that leaves less than two wraps of rope on the drum.

Underhung, hand-chain operated hoists shall have a means to restrain the chain before the load chain can be completely run out of the hoist. The restraint shall be designed such that the unloaded hoist can withstand a lowering hand-chain force equivalent to twice the pull required to lift the rated load or, with the rated load on the hoist, a hand-chain force equivalent to the pull required to lift the rated load.

[39] In lieu of a limit switch, a mechanism such as a slip clutch may be used for underhung hoists.

Plants where the load block may enter pits or hatchways below the floor should be provided with a lower limit switch.

Warning Devices.—Except for floor-operated cranes, all cranes with a powered traveling mechanism shall be equipped with a travel warning device. A gong, bell, horn, flashing light, or other effective warning device shall be used for this purpose. A warning device is recommended for floor-operated cranes with a powered traveling mechanism.

For outdoor overhead and gantry crane operations with a top-running trolley, a wind-indicating device shall be provided. The device shall give a visible and audible alarm to the crane operator at a predetermined wind velocity.

Service Receptacles.—All service receptacles provided on the cab or bridge shall be of the permanent, grounded three-prong type, not to exceed 300 volts.

Frequent Inspections. Check operation of hoist upper limit switches, without load, by carefully inching into the limit switch. Confirm operation of all warning devices.

Periodic Inspections. Check operation of hoist upper, lower, and travel limit switches; check electrical contacts for signs of pitting or any other deterioration. Check levers and cams for adequate lubrication and excessive wear. Verify main disconnect and cab disconnect or breaker meet all code requirements.

Bridge and Trolley Conductors and Collectors.—Open type conductors, mounted on the crane runway beams or overhead, shall be located or guarded so that personnel cannot, under normal operating conditions, inadvertently come in contract with the energized conductors. The guards shall be securely fastened so that any contact between the guards and the hoist ropes will prevent the hoist ropes from coming into contact with the conductors.

Frequent Inspections. Nothing required.

Periodic Inspections. Check the contact surfaces of open conductors and collectors for signs of arcing damage, pitting, and corrosion. Check condition of insulators. Clean as required. Check that festoon type conductor cable moves freely with bridge and trolley movement. Check the condition of insulation and for kinking in cable. Check that all guards are in place and secure.

9. Hoisting Equipment

Drums and Sheaves.—Rope drums shall be grooved, unless provided differently by the manufacturer for a special application. The grooves shall be free of surface defects and form a close-fitting saddle for the rope size used.

Sheave grooves shall be smooth and free from surface defects that might damage the rope. Sheaves in the bottom block shall be equipped with guards that will prevent the ropes from fouling when the block is lying on the ground

and the ropes are loose. All running sheaves shall be equipped with means for lubrication. Permanently lubricated, sealed, and/or shielded bearings meet this requirement

Frequent Inspections. Nothing required.

Periodic Inspections. Visually inspect drums and sheaves for cracks or other damage. Check pillow block bearings for tightness, wear, and proper lubrication. With a sheave gauge, check grooves of drums and sheaves for wear. Repair or replace as required. Inspect load block guards for contact with sheaves or wire rope. Inspect wire rope dead-ends.

Hoist Motors, Gear Boxes and Shafts.—Refer to item 7, "Trolley and Bridge Motors, Gear Boxes and Shafts." The same requirements apply.

Equalizers.—If the load is supported by more than one part of rope, the tension shall be equalized. Equalizer sheaves shall be lubricated at the same time as other drums and sheaves.

Frequent Inspections. Nothing required.

Periodic Inspections. Manually turn equalizer sheave on inspection, so that ropes travel in a new location. Lubricate if required.

Hoist Wire Rope or Load Chain.—Hoisting ropes shall be as recommended for the crane service. For hoists and overhead cranes, the wire rope design factor is 5:1.

Socketing shall be done in a manner recommended by the rope or fitting manufacturer or a qualified person.

Ropes shall be secured to the drum as follows:

a. No less than two wraps of rope shall remain on the drum at each anchorage of the hoisting drum when the hook is in its extreme low position unless a lower-limit device is provided; in which case, no less than one wrap shall remain.

b. The rope end shall be anchored by a clamp attached to the drum or by a socket arrangement specified by the crane or rope manufacturer. Rope clamps shall be tightened to the recommended manufacturer's torque.

c. Eye splices shall be made in the recommended manner. Rope thimbles should be used in the eye.

d. Wire rope clips shall be drop-forged steel of the single-saddle(U-bolt) or double-saddle type.

e. Swaged or compressed fittings shall be applied as recommended by the rope, crane, or fitting manufacturer or qualified person.

f. Rope having an independent wire-rope or wire-stranded core or other temperature resistant core shall be used whenever the rope is exposed to ambient temperatures greater than 180 degrees.

g. Using rotation-resistant rope shall be approved by the manufacturer of the equipment on which it is used, if possible. The application of rotation-resistant rope requires special installation procedures, higher design factors, and special inspection and maintenance procedures.

h. Replacement rope shall be the same size, grade, and construction as the original rope furnished by the crane manufacturer, unless otherwise recommended by a rope or crane manufacturer or qualified person due to actual working condition requirements.

Startup and Daily Inspections.—At the start of each shift or day and prior to the crane being used, the crane operator shall visually inspect the rope for visual damage, such as:

a. Distortion of the rope, such as kinking, crushing, unstranding, bird-caging, main strand displacement, or core protrusion

b. General corrosion

c. Broken or cut strands

d. Number, distribution, and type of visible broken wires

When damage is discovered, the rope shall either be removed or given a detailed inspection as required in the periodic inspection below.

Check wire rope to ensure there is no slack in drum or load block and that reeving is proper.

Check load chains for worn or damaged links. Check that the chain feeds into and away from sprockets smoothly. If the chain binds, jumps, or is noisy, it shall be checked to ensure that it is clean and properly lubricated. If the trouble persists, the chain and mating parts shall be inspected for wear, distortion, or other damage.

The chain shall be examined visually for gouges, nicks, weld spatter, corrosion, and distorted links. The chain shall be slackened, and the adjacent links shall be moved to one side to inspect for wear at the contact points.

Monthly Inspections. For inservice overhead and gantry cranes, OSHA 1920.179 requires a monthly, documented running rope inspection to be performed by a qualified wire rope inspector.[40] Similarly, overhead and gantry cranes with load chains also shall have a monthly inspection

[40] Occupational Safety and Health Administration, "Overhead and Gantry Cranes," 1910.179 (m) 1.

conducted.[41] Documentation shall include the date of inspection, the signature of the person who performed the inspection, and the identity of the ropes that were inspected. This documentation shall be kept readily available.

Visually inspect running ropes for any condition that could result in an appreciable loss of strength. Some conditions to look for are:

a. Reduction of rope diameter below nominal diameter

b. A number of broken outside wires and the degree of distribution or concentration of broken wires

c. Worn outside wires

d. Corroded or broken wires at end connections

e. Corroded, cracked, bent, worn, or improperly applied end connections

f. Severe kinking, crushing, cutting, or unstranding

For overhead and gantry cranes that are in service, load chains are required to be inspected monthly. Cranes not in regular use that have been idle for 1 month or more, but less than 6 months, shall have a chain inspection, equal to a monthly chain inspection before returning to service. Welded link and roller type chain inspection shall check for excessive wear, twist, or distorted links which interfere with the chains proper function or stretching beyond the manufacturer's recommendations. Also inspect the end connections.

A monthly inspection is not required if a periodic inspection of running and standing rope or chain is accomplished the same month.

Periodic Inspections. A thorough inspection of running rope and standing rope shall be made at least annually or more frequently as determined by a qualified person. Inspection frequency shall be based on such factors as expected rope life, determined by experience on the particular equipment or similar equipment, severity of environment, percentage of capacity lifts, frequency of operation, and exposure to shock loads. Periodic wire rope and load chain inspections should be performed in conjunction with the overall crane periodic inspection. Inspect the entire length of each rope. Check the wire ropes for:

a. Items listed for frequent wire rope inspection

b. Items listed for the monthly wire rope inspection

c. Reduction of rope diameter below nominal diameter resulting from loss of core support, internal or external corrosion, or wear of outside wires

d. Severely corroded or broken wires at end connections

[41] Occupational Safety and Health Administration, "Overhead and Gantry Cranes," 1910.179 (j) 2 (iv).

e. Severely corroded, cracked, bent, worn, or improperly applied end connections

f. Improper and insufficient rope lubrication

g. Evidence of heat or other damage from any source

Additional care should be taken when inspecting sections where rapid deterioration may take place, such as a section in contact with saddles, equalizer sheave or other sheaves, and sections of rope at or near terminal ends. Refer to the *Rigging Manual* or the rope manufacturer for recommendations for replacing the wire rope. Clean and apply lubrication, if required, according to manufacturer's recommendations.

Ropes that have been idle for a period of 1 month or more due to shutdown or storage shall be given a thorough inspection by a qualified wire rope inspector, which shall include running and standing ropes and be equal to a periodic inspection as previously described. The inspection shall be completed prior to the equipment's return to service. Be particularly cognizant of the condition of the wire rope lubricant.

Periodic load chain inspections are required and should be performed in conjunction with the overall crane periodic inspection. A periodic inspection is more thorough than the monthly inspection and shall include a careful link-by-link inspection of the load chain.

a. Check welded link load chains for:

b. Link wear that is less than 90 percent of the original bar diameter

c. Nicking, cracking, or corrosion of a link that, when ground out to a smooth surface, leaves less than 90 percent of the original bar diameter

d. Stiffening or poor hinging of the linkage

e. Distortion by bending or kinking of 15 percent of any overall link dimension

f. Evidence of heat damage

g. Elongation in excess of the manufacturer's recommended allowable

h. Worn, nicked, or corroded fittings

For inspection of roller type load chain, test the hoist under load in lifting and lowering directions and observe that the chain feeds smoothly into and away from the sprockets. If the chain binds, jumps, or is noisy, first see that it is clean and properly lubricated. If the trouble persists, inspect the chain for the following:

a. Elongation following the hoist manufacturer's instructions.

b. Chain twist – Replace the chain if, in any 5-foot section, the twist exceeds 15 degrees.

c. Check for straightness in the plane perpendicular to the plane of the rollers. A chain that has a bow exceeding 0.25 inch in any 5-foot section shall be replaced.

Additional inspection of the chain should be made by removing the chain from the hoist and cleaning it thoroughly in an acid-free solvent. Then check the chain for any of the following deficiencies:

a. Pins turned from their original position

b. Rollers that do not run free with light finger pressure

c. Points that cannot be flexed by easy hand pressure

d. Side plates that are spread open

e. Corrosion, pitting, or discoloration of the chain

f. Gouges, nicks, or weld splatter

Refer to the *Rigging Manual* or the chain's manufacturer for guidelines on replacing the chain. Clean and apply lubrication, if required, according to manufacturer's recommendations.

10. Hooks

General.—This section applies to crane or hoist hooks. Hooks used with rigging are described in the section on rigging hardware. Hooks shall meet or exceed the requirements of ANSI/ASME B30.10, "Hooks." Hooks shall meet the manufacturer's recommendations and not be overloaded. Swivel hooks should rotate freely. Latch-equipped hooks shall be used unless the application makes using a latch impractical or unnecessary.

Marking.—The manufacturer's identification shall be forged or die-stamped on the hook.

Throat Latches.—All hooks shall be equipped with a latch, or mousing, that bridges the throat opening, unless the application makes using the latch impractical or unsafe. Unless there is a specific unsafe or impractical situation, use of the hook latch should be considered as mandatory.

Hooks shall be inspected at the frequency previously noted in section 6.5. If any damage is found, the hardware shall be removed from service. A designated person shall include the following items in his inspection:

Initial Inspections. All new and repaired hooks shall be inspected to ensure compliance with the applicable provisions of ANSI/ASME B30.10, "Hooks," prior to initial use. Document this inspection asrequired.

Pre-use and Daily Inspections. At the start of each shift or daily use, each hook shall be visually inspected by the operator or other designated person. No records are required. Inspect the hook for the following:

a. Cracks, nicks, and gouges.

b. Any sign of deformation such as bending, twisting, or increase in throat opening.

c. Chemical damage.

d. Check hook latch operation for damaged or malfunctioning latch. Check that the latch fully engages.

Frequent Inspections. Visually inspect hook for the same items as with a pre-use or daily inspection such as cracks, nicks, gouges, chemical damage, deformation, and hook latch operation. Check that swivel hooks are free to rotate. Also observe during operation and include:

a. Check for abnormal wear.

b. Check the hook attachment and securing point.

c. Check for excessive damage from rust, especially on threaded hook attachments.

Periodic Inspections. As required, document the periodic inspection. Measurements are required only if the inspector finds evidence of distortion or damage. Hooks having any deficiencies shall be removed from service until repaired or replaced.

In the inspection, include the requirements of the "frequent inspection" previously discussed. Lubricate swivel and sheave bearings as required. With hooks that are occasionally submerged in water or show signs of corrosion, disassemble the load block to inspect the hook shank. In this case, inspect for proper lubrication, corrosion damage on threaded shanks and nuts, or excessive clearance.

Hooks with any of the following conditions shall be removed from service until repaired or replaced.

a. An increase in throat opening of more than 15 percent (or as recommended by the manufacturer).

b. A bend or twist of more than 10 degrees from the plane of the unbent hook (or as recommended by the manufacturer).

c. Wear exceeding 10 percent of the original sectional dimension of the hook or its load pin(or as recommended by the manufacturer).

d. Any visible crack.

e. Inoperable hook latch or a hook with a latch that does not close the full throat opening.

f. A self-locking hook that does not lock.

Dated and signed inspection records shall be kept on file and readily available.

Annual Nondestructive Testing (NDT) such as magnetic particle, die penetrant, or other nondestructive test are not required but are recommended for hooks that are submitted to severe or heavy service or hooks with questionable defects. It also is recommended that the manufacturer conducts a NDT on any new crane/hoist hooks. NDT records, traceable to the hook by serial number or other identifier, shall be kept on file as long as the hook remains in service.

Minor discontinuities may be removed by limited and controlled grinding. This work should be performed by a qualified person. Cracks, nicks, and gouges may be removed by grinding longitudinally, following the contour of the hook, provided that no dimension is reduced more than 10 percent (or as recommended by the manufacturer) of its original value. When performing this work, using a NDT is recommended. Contact the Mechanical Equipment Group, 86-68410, for further guidelines prior to grinding.

Operation.—Operating practices and guidelines for using rigging hooks are as follows:

a. Never lift a load that exceeds the load rating of the hook.

b. Avoid shock loading the hook.

c. Always have the load centered in the base (bowl or saddle) of the hook.

d. Avoid side or back loading the hook.

e. Insure that the load is not carried on the throat latch.

f. Load duplex (sister) hooks equally on both sides.

g. Do not load the pinhole in duplex (sister) hooks beyond the rated load of the hook.

6.11 Ropes, Slings, Chains, and Rigging Hardware

6.11.1 General Maintenance and Inspection Requirements

Reclamation Safety and Health Standards, section 18, provides information on ropes, slings, chains, and accessories and their safe use. It is based on safety regulations set forth in OSHA 1910.184 "Slings," and OSHA 1926.251 "Rigging Equipment for Material Handling" (Construction). The *Rigging Manual* published by the Construction Safety Association of Ontario, 21 Voyager Court South, Etobicoke, Ontario, Canada M9W 5M7 has been designated as the

Reclamation *Rigging Manual*. This publication provides information on safe rigging, load capacities of slings and other rigging equipment, and the inspection of wire rope and slings. The *Rigging Manual* should be used as a guide to determine whether rigging practices are safe and conform with industry-wide practices; and while its use is recommended, it is advisory in nature and intended to complement the safety requirements of *Reclamation Safety and Health Standards,* section 18 and appendices D and E. ANSI/ ASME B30.9 "Slings," ANSI/ASME B30.10 "Hooks," and ANSI/ASME B30.26 "Rigging Hardware" are also helpful references in using and inspecting rigging.

Rigging equipment shall be inspected prior to use on each shift and as necessary during its use to ensure that it is safe. Defective equipment that is repairable should immediately be clearly marked as unsafe and removed from service. Repairs should be made by the manufacturer or in accordance with the manufacturer's written instructions. Repaired equipment shall be tested at twice their rated safe working load. Defective equipment that is not repairable should be cut in half or otherwise rendered unusable to ensure that it will not be reused.

When using multiple-leg slings (three or four legs), two of the legs should be capable of supporting the total load. Multiple-leg slings shall be selected to suit the most heavily loaded leg rather than the total weight.

Capacity charts should be consulted, and all variables (such as sling angle) should be considered to ensure that the rigging hardware's rated capacity is not exceeded by the load being lifted. Slings shall not be used with loads in excess of the rated capacities shown in the rigging tables and in accordance with the manufacturer's recommendations.

6.11.2 Inspections

Sling inspection is divided into three inspection classifications based upon the (a) frequency of sling use, (b) severity of service conditions, (c) nature of lifts, and (d) historical experience of the service life of slings in similar conditions. The three general classifications of inspections are as defined.

Initial Inspections. Prior to use, all new, altered, modified, or repaired slings shall be inspected by a designated person.

Frequent Inspections. OSHA 1910.184 and Reclamation requires that each sling be visually inspected by the operator or other designated person at the start of each shift or daily use.[42] No records are required.

Periodic Inspections. A visual inspection by a designated person is required. Inspection records, as to the apparent condition, are required to be maintained.

[42] Occupational Safety and Health Administration, "Slings," 1910.184, 1910-184(d); *Reclamation Safety and Health Standards*, section 18, 18.1.6 a.

a. Normal service – annually

   Operating at less than 85 percent of rated load and not more than 10 lift/cycles per hour except for isolated instances.

b. Severed service – monthly to quarterly

   Operating at normal service under abnormal operating conditions (i.e., extreme temperatures, corrosive atmospheres).

c. Special or infrequent service – as recommended by a qualified person before the first occurrence and as directed by him for any subsequent occurrences.

Under no condition shall inspection intervals be greater than once every 12 months.

Damaged or defective slings shall be immediately removed from service. Attachments should be replaced and not repaired.

Periodic load testing of slings is not recommended.

6.11.3 Operating Practices

Proper operating practices and guidelines applicable to all types of slings are as follows:

a. Slings having suitable characteristics for the type of load, hitch, and environment shall be selected.

b. The weight of the load shall be within the rated load (working load limit) of the sling.

c. Slings shall not be shortened or lengthened by knotting, twisting, or other methods not approved by the sling manufacturer.

d. Slings that appear to be damaged shall not be used unless they are inspected and accepted as usable according to the stated inspection requirements.

e. The sling shall be hitched or rigged in a manner providing control of the load.

f. Sharp corners in contact with the sling should be padded with material of sufficient strength to minimize damage to the sling.

g. Portions of the human body should be kept from between the sling and the load and from between the sling and the crane/hoist hook.

h. Personnel should stand clear of the suspended load.

i. Personnel should not ride the sling.

j. Shock loading is prohibited.

k. Slings should not be pulled from under a load when the load is resting on the sling.

l. Slings should be stored in an area where they will not be subjected to mechanical damage, corrosive action, moisture, extreme heat, or kinking.

m. Twisting and kinking the legs (branches) shall be avoided.

n. The load applied to the hook should be centered in the bowl of the hooks to prevent point loading on the hook, unless the hook is designed for point loading.

o. During lifting, with or without load, personnel shall be alert for possible snagging.

p. In a basket hitch, the load should be balanced to prevent slippage.

q. The sling's legs (branches) should contain or support the load so that the load remains under control.

r. Slings should be long enough so that the rated load is adequate when the angle of the legs (branches) is taken into consideration.

s. Slings should not be dragged on the floor or over an abrasive surface.

6.11.4 Alloy Steel Chain Slings

Chain for alloy steel chain slings shall conform to the requirements of ASTM A391/A391M, "Standard Specification for Grade 80 Alloy Steel Chain."

Rated Load.—Refer to the *Reclamation Safety and Health Standards*, the *Rigging Manual*, or the chain's manufacturer for guidelines on sizing and safe workload of the chain. Rated loads for alloy steel chain slings shall be based on a minimum design factor of 4.

Proof Testing.—Before use, each new, repaired, or reconditioned alloy steel chain sling, including all welded components in the sling assembly, shall be proof tested by the sling manufacturer or repairing agency to twice the rated capacity. Refer to the *Reclamation Safety and Health Standards*, the *Rigging Manual*, or the chain's manufacturer for other proof testing criteria guidelines.

Sling Identification.—Alloy steel chain slings shall have permanently affixed durable identification stating manufacturer's name or trademark, chain grade and size, number of legs, rated load and angle, and reach. Repaired or worn sling shall be labeled to reflect any reduced capacity.

Environment.—Alloy steel chains shall be permanently removed from service if heated above 1,000 degrees Fahrenheit (°F) and capacities reduced if exposed above 600 °F. The chain manufacturer should be consulted when chain slings are to be used in temperatures of -40 °F or below.

The sling manufacturer should be consulted before slings are used around chemicals, especially caustic, acid, or oxidizing environments.

Attachments.—Hooks, rings, oblong and pear shaped links, coupling links, or other attachments shall have a rated capacity at least equal to that of the alloy steel chain of which they are used; or where impractical, the sling shall be marked with a rated capacity that is consistent with the least working load rating of any component. Standard attachments should be of a size recommended by the sling manufacturer. All welded components in the sling shall be proof-load-tested as components or as part of the sling assembly. Makeshift or job-made links or fasteners formed from bolts or rods shall not be used. Where used, handles shall be welded to the master link or hook before heat treating. (This prohibits welding on chain slings in the field.) Other types of attachments shall meet the requirements of ANSI/ASME B30.26, "Rigging Hardware." Hook characteristics shall meet the requirements of ANSI/ASME B30.10, "Hooks."

Repairs.—Any hazardous condition disclosed by the inspection requirements shall be corrected before use is resumed. Repairs shall be made only by the chain manufacturer or qualified personnel.

Initial Inspection. Before use, all new, altered, modified, or repaired chain slings shall have an initial inspection conducted by a designated person.

Frequent Inspections. Inspect for defects and damage. Any found deficiencies shall cause the sling to be set aside for periodic inspection. Chain and attachments should display no sign of wear, nicks, cracks, breaks, gouges, stretch, bends, weld splatter, discoloration from excessive temperature, or excessive throat opening of hooks. Chain links and attachments shall hinge freely with adjacent links. Latches on hooks, if present, should hinge freely and seat properly without distortion.

Periodic Inspections. Perform a complete link-by-link inspection of the sling. The inspection shall include all items described in the frequent inspection. In addition, each link and attachment shall be individually examined, taking care to expose the inner-link surfaces of the chain and chain attachment. Refer to the *Reclamation Safety and Health Standards*, the *Rigging Manual*, or the chain's manufacturer for guidelines on the replacement of the chain.

A dated record of this inspection shall be maintained and available for examinations.

Operating Practices.—

a. Multiple-leg (branch) chain slings shall be selected according to the *Reclamation Safety and Health Standards*, the *Rigging Manual*, or the chain's manufacturer for guidelines. Use the rated load given for the next lower angle for operations at angles between the specific angles listed in the table.

b. When used in a choker hitch arrangement, slings shall be selected to prevent the load developed on any portion of the sling from exceeding the rated load of the chain sling components.

6.11.5 Wire Rope Slings

Wire rope slings are made from various grades and types of wire rope. Rated loads of wire rope slings shall be specified by the manufacturer, with a design factor of at least 5. Rotation-resistant wire rope shall not be used for slings.

Minimum Sling Length.—Cable laid, wire and braided slings, sling grommets, and endless slings shall have a minimum length as defined in OSHA 1920.184.

Rated Load.—Refer to the *Reclamation Safety and Health Standards*, the *Rigging Manual*, or the wire rope manufacturer for guidelines and tables on the sizing and safe workload of the rope.

Proof Testing.—Job-made or repaired slings require proof testing.

a. Hand-tucked slings shall be tested with a proof load that is a minimum of the rated load and shall not exceed 1.25 times the rated load.

b. Wire rope clips shall be tested with a proof load that is a minimum of the rated load and shall not exceed two times the rated load (refer to the section, "Wire Rope Clamps").

c. Other types of wire rope sling assemblies, including mechanical splice, zinc-poured, resin poured, and swagged socket, shall be proof tested to two times the vertical rated load.

d. The proof load for multiple-leg bridle slings shall be applied to the individual legs. The load for the individual legs shall be consistent with the particular single-leg assembly stated above. The master link to which the multiple legs are connected shall be proof loaded to two times the force applied by the combined legs.

Refer to the *Reclamation Safety and Health Standards*, the *Rigging Manual*, or the wire rope manufacturer for proof testing criteria.

Sling Identification.—Wire rope slings shall be labeled with a permanent tag or other identification method. The identifier shall state the manufacturer's name and rated load. The load test date and periodic inspection due date is also beneficial.

Environment.—Fiber core wire rope slings of all grades shall not be exposed to temperatures in excess of 180 °F or less than -40 °F. Wire rope slings of any grade shall be used only between 400 °F and -60 °F.

The sling manufacturer should be consulted before slings are used around chemicals—especially caustic, acid, or oxidizing environments.

Minimum Sling Lengths.—Slings, made of rope with a 6 by 19 and 6 by 37 construction, and cable-laid slings shall have a minimum clear length of rope 10 times the rope diameter between splices, sleeves, or end fittings. Braided slings shall have a minimum clear length of 40 times. Grommets and endless slings shall have a minimum circumferential length of 96 times the body diameter of the grommet or endless sling.

End Attachments.—All welded load-bearing components (welded before or after assembly) in the sling shall have a design factor of 5:1 and shall be proof tested by the manufacturer or the manufacturer's agent to twice their rated load. Welding of handles or any other accessories to end attachments, except covers to thimbles, shall be performed prior to assembly of the sling. Eyes in wire rope slings shall not be formed using knots. Other types of attachments shall meet the requirements of ANSI/ASME B30.26, "Rigging Hardware." Hook characteristics shall meet the requirements of ANSI/ASME B30.10, "Hooks."

Special Cautions.—

a. Wire rope clamps (clips) shall not be used to fabricate wire rope slings except when the application of the sling prevents using a prefabricated sling or when the specific application is designed by a qualified person. When used, slings fabricated using wire rope clamps shall be derated to 80 percent of the rated wire rope load capacity to account for the efficiency of the clamps. Wire rope clamps must be installed in accordance with the manufacturer's recommendations. The nuts on the clamps must be checked periodically and retorqued to the recommended value. Slings made with wire rope clips should not be used as a choker hitch.

b. Wire rope wedge sockets shall not be used to fabricate wire rope slings. Refer to the additional information given in the "Rigging Hardware" section of this manual.

c. Slings with eyes formed by folding back the rope (not a Flemish eye loop) and secured with one or more metal sleeves pressed (not forged) over the wire rope junction are prohibited.

d. Slings shall not be made from rotation-resistant wire rope.

Repairs and Replacement.—Wire rope slings shall be removed from service if any of the following conditions exist:

a. For strand-laid and single-part slings, ten randomly distributed broken wires in one rope lay or five broken wires in one strand in one rope lay.

b. Broken wires in braided and cable-laid slings.

c. Severe localized abrasion or scraping of one-third the original diameter of outside individual wires.

d. Kinking, crushing, bird-caging, or any other damage resulting in distortion of the rope structure.

e. Evidence of heat damage.

f. End attachments that are cracked, deformed, or worn to the extent that the strength of the sling is substantially affected.

g. Severe corrosion of the rope or end attachments.

h. Hooks that have been opened more than 15 percent of the normal throat opening measured at the narrowest point or twisted more than 10 degrees from the plane of the unbent hook.

Refer to the *Reclamation Safety and Health Standards*, the *Rigging Manual*, or the wire rope manufacturer for guidelines on when to replace the wire rope.

Inspections.—Because many variable factors are involved, no precise inspection criteria can be given for determining the exact time for replacement of a sling. In this respect, safety depends largely on a qualified person using good judgment.

Frequent Inspections. All slings shall be visually inspected each day by the person using the sling. Slings should be inspected for:

a. Distortion of rope in the sling such as kinking, crushing, unstranding, bird-caging, main strand displacement, or core protrusion. If loss of rope diameter in short rope lengths or unevenness of other strands is observed, the sling or slings should be replaced.

b. General corrosion.

c. Broken or cut strands.

d. Number, distribution, and type of visible broken wires (ten randomly distributed broken wire in one rope lay or five broken wires in one strand in one rope lay).

Periodic Inspections. A wire rope sling periodic inspection shall be performed by a qualified inspector with the frequency of inspection based on the frequency of sling use, severity of service conditions, and the nature of the lifts being made. The periodic inspection shall be made at least on an annual basis. The individual inspection of each sling shall be documented. Typical methods of sling documentation is to mark a serial number on the sling and maintain inspection records by serial numbers, institute a comprehensive marking program such as color coding, or mark each sling with a tag that indicates when the next periodic inspection is required. The tag than becomes the record. Inspection shall be of the entire length of each sling including splices, end attachments, and fittings. Deterioration that would result in original strength loss shall be observed and a determination made whether further using the sling would constitute a hazard.

Operating Practices.—In addition to the operating practices referenced earlier, the following practices apply to wire slings:

a. Multiple-leg slings shall be selected so as not to introduce a working load in direct tension in any leg greater than that permitted. Triple and quadruple leg sling rating should be considered the same as a double-sling rating. If rigging techniques, verified by a qualified rigger, ensures that load is evenly distributed, then full use of three legs is allowed. Special rigging techniques verified by a qualified engineer shall be required to prove a load is evenly distributed over four or more sling legs.

b. In a choker hitch, slings shall be long enough so that the choker fitting chokes on the wire rope body and never on the fitting.

c. Slings shall not be inspected by passing bare hands over the wire rope body. Broken wires, if present, may injure the hands.

d. Fiber core wire rope should not be subjected to degreasing or a solvent, because it will damage the core.

e. Single-leg slings with hand-tucked splices can be unlaid by rotation. Care should be taken to minimize rotation.

f. An object engaging the eye of a loop eye sling should not be greater in width than one-half the length of the loop eye.

Onsite Sling Fabrication.—Slings may be fabricated onsite by knowledgeable craftsmen. Slings shall be made only from new wire rope. When swaged fittings are used, the fitting and swaging machine manufacturer's recommendations shall be followed. Thimbles should be used unless their use makes the sling impractical.

a. Using wire rope clips should be avoided and only used in special cases.

b. The terminal efficiency of hand tucked splices is reduced. This sling type is also usually more expensive than most commercially made slings.

c. Using Flemish eye spices with swaged sockets is usually the best method and shall be used except when use is impractical.

6.11.6 Metal Mesh Slings

Using metal mesh slings in power and pumping facilities is limited. Refer to ANSI/ASME 30.9, the *Rigging Manual*, or the sling manufacturer for guidelines if this type of sling is used.

6.11.7 Natural and Synthetic Fiber Rope Slings

Slings manufactured from conventional three-strand natural or synthetic fiber rope are not recommended for use in lifting service. Refer to ANSI/ASME 30.9,

Reclamation Safety and Health Standards, the *Rigging Manual*, or the sling manufacturer if this type of sling is used.

6.11.8 Synthetic Webbing Slings

Construction.—

a. The webbing of synthetic web slings shall have sufficient certified tensile strength to meet the sling manufacturer's requirements. Stitching is the only method that is to be used to attach end fittings to the webbing and to form eyes. Webbing ends shall be sealed by heat or other methods to prevent unraveling. The webbing shall have a uniform thickness and width.

b. Coatings shall be of a suitable material that will seal the sling to help resist abrasion and prevent penetration of foreign particles and dirt. The coating shall offer0 protection from sunlight or ultraviolet degradation and increase the41+-- 0coefficient of friction.

c. If synthetic web slings incorporate metal fittings, the fittings shall be of sufficient strength to sustain twice the rated load of the sling without permanent deformation and have a minimum breaking strength equal to five times the rated capacity of the sling. Slings incorporating reused or welded fittings shall be proof tested to two times the rated load to the sling. Surfaces shall be cleanly finished and without sharp edges that might damage the webbing. The eye opening in the fitting shall be the proper shape and size to ensure that the fitting will seat properly in the hook or other attachment. Slings with aluminum fittings shall not be used where chemical fumes or sprays from caustic or acidic liquids are present.

Marking (Sling Identification).—Synthetic web slings shall be labeled (a sewn-on leather tag is recommended). The label shall state the following:

- Manufacturer's name or trademark
- Manufacturer's code or stock number
- Rated loads for the types of hitches used
- Type of synthetic web material

An additional tag, sticker, or other identifier shall be added by the user to indicate when the next periodic inspection is required.

If the synthetic web sling is to be used for critical lifts, the tag or other identification means shall be used to indicate that a proof test has been performed.

Design Factor.—The design factor for synthetic web slings shall be a minimum of 5.

Rated Load.—A synthetic web sling shall not be used at a load greater than shown on its tag. Refer to the *Reclamation Safety and Health Standards*,

the *Rigging Manual*, or the wire rope manufacturer for guidelines and tables on sizing and safe work load of the synthetic web slings.

Proof Test.—Proof testing is not required for synthetic web slings but may be beneficial if the slings may be used in critical lift situations. Single leg and endless slings shall be proof tested to two times the vertical rated load. Each individual leg of a multiple leg bridle sling would also be tested to two times the vertical rated load.

Environment.—High radiation or chemically active environments can destroy the strength of synthetic web slings. Sling materials can be susceptible to caustics and acids. The manufacturer should be consulted before slings are used in chemically active environments. Specific environmental limits are as follows:

a. Nylon and polyester slings shall not be used at temperatures in excess of 180 °F.

b. Synthetic web slings that incorporate aluminum fittings shall not be used where fumes, vapors, sprays, mists, or liquids of caustics or acids are present.

c. Nylon web slings shall not be used where fumes, vapors, sprays, mists, or liquids of acids or phenolics are present.

d. Polyester web slings shall not be used where fumes, vapors, sprays, mists, or liquids or caustics are present.

e. Synthetic web slings are not recommended where extensive exposure to sunlight or ultraviolet light is experienced. Most synthetic web slings are especially susceptible to damage by ultraviolet light. Synthetic slings require storage away from exposure to sunlight. Slings that have had long-term exposure to sunlight should be removed from service.

Inspections.—

Initial Inspections. Before any new or repaired synthetic web sling is used, it shall be inspected to ensure that the correct sling is being used as well as to determine that it has proper identification.

Frequent Inspections. This inspection should be made by the person handling the sling each day the sling is used.

Periodic Inspections. A periodic inspection shall be performed by a qualified inspector on a regular basis with frequency of inspection based on the frequency of sling use, severity of service conditions, and the nature of the lifts being made. The periodic inspection shall be made at least annually. The individual inspection of each sling shall be documented. Typical methods of sling documentation is to mark a serial number on the sling and maintain inspection records by serial numbers, institute a comprehensive marking program such as color coding, or

mark each sling with a tag that indicates when the next periodic inspection is required. The tag than becomes the record.

Removal Criteria.—Synthetic web slings shall be removed from service if the following damage is visible:

a. Acid, phenolic, or caustic attack

b. Melting or charring on any part of the sling

c. Holes, tears, cuts, or snags

d. Broken or worn stitching in load-bearing splices

e. Excessive abrasive wear

f. Knots in any part of the sling

g. Excessive pitting or corrosion or cracked, distorted, or broken fittings

h. Other visible indications that cause doubt as to the strength of the sling, such as loss of color that may indicate the potential for ultraviolet light damage

Repairs.—Synthetic web slings shall be repaired only by a sling manufacturer or a qualified repair agent. Proof testing is required to twice the rated load for all repaired slings. When repaired, a sling shall be permanently marked to identify the repair agent. Temporary repairs shall not be permitted.

Additional Operating Practices.—The following additional operating practices are applicable to using synthetic web slings:

a. The sling's legs should contain or support the load from the sides above the center of gravity when a basket hitch is used.

b. In a choker hitch, slings shall be long enough so the choker fitting chokes on the webbing and never on the other fitting.

c. Nylon and polyester slings shall not be used at temperatures in excess of 180 °F or below -40 °F.

d. Nylon and polyester web slings lose strength from extensive exposure to sunlight or ultraviolet light. Possible strength loss may be indicated by color loss in the pick threads or outer jacket. If the user suspects sunlight or ultraviolet light damage, the sling shall be taken out of service pending inspection by a qualified person.

e. Hard or brittle spots in the fabric of synthetic slings may indicate a substantial reduction in strength as a result of damage from chemicals or excessive heat.

6.11.9 Rigging Hardware (Shackles, Eyebolts, etc.)

This section summarizes some of the more important requirements to use rigging hardware for lifting service. Rigging hardware standards can be found in ASME/ANSI B30.26, "Rigging Hardware." Refer to the *Reclamation Safety and Health Standards* and the *Rigging Manual* for sizing and additional guidelines for rigging hardware.

This section divides rigging hardware into six different categories:

1. Shackles. Types of shackles include anchor, chain, and synthetic sling shackles. Pin types are divided into screw and bolt pins.
2. Adjustable Hardware. This includes turnbuckles, eyebolts, eye nuts, swivel hoist rings, and other types of adjustable hardware.
3. Compression Hardware. Wire rope clip, wedge sockets, and other types of compression hardware fall under this category.
4. Links, Rings, and Swivels.
5. Rigging Blocks. Types of rigging blocks include tackle, utility, rolling, and snatch blocks.
6, Rigging Hooks.

Inspections.—Inspection criteria pertaining to all types of rigging hardware is as follows:

Initial Inspection. Prior to use, new, altered, modified, or repaired rigging hardware shall be inspected. Repairs, modifications, or alterations should not be done except as defined by the manufacturer or a qualified person. Replaced parts must meet or exceed the specifications of the original parts. Documentation is not required.

Frequent Inspection. Daily or before each shift use, all rigging hardware used shall be visually inspected. Documentation is not required.

Periodic Inspection. At least once a year, a complete inspection of all rigging hardware shall be performed by a designated person. Although documentation is not required, the condition, inspection scheduling, and inventory of rigging hardware can easily be tracked through a CMMS and is recommended.

Training.—All users of rigging hardware shall be trained to use the hardware, including the selection, inspection, environmental hazards, safety to personnel, and rigging practices particular to that hardware.

Selection.—Rigging hardware shall be selected according to the recommendations of the manufacturer or a qualified person.

Storage.—Rigging hardware should be stored in an area where it will not be exposed to extreme heat, chemical and corrosive damage, or other potentially damaging conditions.

1. Shackles

General.—Shackles are manufactured in three configurations to use in rigging: anchor shackles, chain shackles, and synthetic sling shackles. All are available with screw pins, round pins, or safety bolts. Using round pin shackles is not recommended for lifting purposes.

Shackles are sized by the diameter of steel in the bow section rather than the pin size. Shackle specifications are derived from the following documents:

a. For shackles 3/16 to 2½ inches, Federal Specification RR-C-271, "Chains and Attachments, Welded and Weldless," applies.

b. For shackles 1½ to 4 inches, MIL-S-24214, "Shackles, Steel, General Purpose and High Strength," applies.

c. For shackles 4½ to 8½ inches, ASTM A148M, "Standard Specification for steel Castings, High Strength, for Structural Purposes," should be used.

For sizes that overlap, either RR-C-271 or MIL-S-2414 can be used; however, RR-C-271 is most commonly used.

Design Factor.—Shackles manufactured under requirements of RR-C-271 and MIL-S-24214 have a design factor of 5; those specified under the requirements of ASTM A148M have a minimum design factor of 4.

Proof Test.—Proof testing is not required for shackles but may be beneficial, especially if the hardware may be used in critical lift situations. A critical lift procedure may call for proof testing or additional load testing. Proof test the hardware with a proof load that is a minimum of two times the rated load. If tested, inspect the hardware for damage after the test.

Marking and Tagging.—Each shackle body shall be permanently and legibly marked by the manufacturer. Marking will be raised or stamped letters on the side of the shackle bow with an identifying manufacturer's name or trademark, shackle size, and the rated load (maximum allowable load).

Shackle pins also shall be marked with the manufacturer's name or trademark and the load rating, grade, or material type.

Shackles should be restamped or discarded if the shackle identification becomes illegible.

Shackles that have been proof tested shall have a tag or other marking to indicate clearly to the user that proof testing has been done.

Hostile Environments.—The shackle manufacturer or qualified person should be contacted before using shackles in a hostile environment. This includes use at temperatures above 400 °F, below -40 °F, or in chemically active environments.

Shackle Inspection and Removal Criteria.—The shackle shall have no defect that will interfere with serviceability. Shackles shall be inspected for and removed from service if any damage is found to the shackle which may include the following:

a. Shackle pins shall fit freely without binding. Pins should fully engage.

b. The pin shall show no sign of deformation.

c. Missing or unreadable markings.

d. Excessive pitting or corrosion.

e. Thread damage.

f. Heat damage, weld spatter, or evidence of unauthorized welding.

g. Any sign of deformation including bent, twisted, distorted, stretched, elongated, cracked, or broken load-bearing parts.

h. A 10-percent reduction of the original diameter at any point on the body or pin.

i. Nicks or gouges.

j. Other conditions that compromise the integrity of the shackle.

Repairs should be made only by the manufacturer or a qualified person. Replacement pins or other parts shall meet or exceed the manufacturer's original specifications.

Operation.—Operating practices and guidelines for using shackles are as follows:

a. Select shackles according to the shackle manufacturer's guidelines. Remember that the stress in the shackle is affected by the loading angle. As the horizontal angle decreases, the stress in the shackle increases.

b. Never exceed the rated load of the shackle.

c. Never use shackles that appear to be damaged.

d. The shackle pin shall never be replaced with a bolt; only a properly fitted pin shall be used. Bolts are not intended to take the load that is normally applied to the pin.

e. Avoid shock loading.

f. Avoid contact with sharp edges.

g. Avoid dragging shackles on the ground or over an abrasive surface.

h. Shackles shall not be used if the pin cannot be completely seated, with the shoulder making contact with the shackle body.

i. If side loaded, the shackles rated load should be reduced according to the horizontal angle of the load.

j. Shackles shall never be pulled at an angle because the capacity will be tremendously reduced. Centralize whatever is being hoisted on the pin by suitable washers or spacers. The load should always be centered in the bow of the shackle.

k. Screw pin shackles shall not be used if the pin can roll under the load and unscrew.

Bolt shackles should be used when requirements call for long-term installations. This type is better suited than the screw pin type where the pin may rotate or loosen.

2. *Adjustable Hardware*

General.—Adjustable hardware includes turnbuckles, eyebolts, eye nuts, and swivel hoist rings.

Turnbuckles are found in the open body and pipe body style and can come with hook, eye, or jaw end fittings. Eyebolts include shoulder nut, nonshoulder nut, nonshoulder machinery, and shoulder machinery types. All should be designed to permanently deform prior to losing the ability to support the load at manufacturer's recommended temperature. Turnbuckles shall meet or exceed the requirements of Federal Specification FF-T-791 (latest revision), "Turnbuckles." Turnbuckles used in hoisting and rigging shall be fabricated from forged alloy steel.

Only shouldered eyebolts (Type 2) shall be used for rigging hardware, except when prohibited by the configuration of the item to which the eyebolt is attached. *Reclamation Safety and Health Standards* require that all eyebolts be forged alloy steel and equipped with shoulders or collars.[43]

Carbon steel eyebolts are made of forged carbon steel. Alloy steel eyebolts are forged, quenched, and tempered with improved toughness properties and intended primarily for low-temperature applications.

Design Factor.—All adjustable hardware shall be designed with a factor of 5.

Proof Test.—Proof testing is not required for new adjustable hardware but may be beneficial, especially if the hardware may be used in critical lift situations. A critical lift procedure may call for proof testing or additional

[43] *Reclamation Safety and Health Standards*, section 18.7.4.

load testing. Proof test the hardware with a proof load that is a minimum of two times the rated load. If tested, inspect the hardware for damage after the test.

Marking and Tagging.—Each turnbuckle, eyebolt, and eye nut shall be marked with the manufacturer name or trademark, the size or rate load, and the grade (for alloy eyebolts). Swivel hoist rings each shall be marked with the manufacturer's name or trademark, the rate load, and the torque value. All hardware should be maintained so that all markings are legible throughout the life of the hardware.

Eyebolt Marking:

a. Carbon Steel Eyebolts. Each eyebolt shall have the manufacturer's name or identification mark forged in raised characters on the eyebolt surface.

b. Alloy Steel Eyebolts. Each eyebolt shall have the symbol "A" (denoting alloy steel) and the manufacturer's name or identification mark forged in raised characters on the eyebolt surface.

Hostile Environments.—When using adjustable hardware in a hostile environment, excluding swivel hoist rings and carbon steel eyebolts, the manufacturer or a qualified person should be contacted before their use. This includes use at temperatures above 400 °F, below -40 °F, or in chemically active environments.

For swivel hoist rings, consult the manufacturer or a qualified person if used at temperatures above 400 °F, below -20 °F, or in chemically active environments. For carbon steel eyebolts, the temperature range is above 275 °F or below 30 °F or in chemically active environments. Note that carbon steel eyebolts are subject to failure from shock loading at temperatures below 30 °F and lose strength at temperatures above 275 °F.

NOTE: Eyebolts manufactured according to ASTM A 489, "Standard Specifications for Carbon Steel Lifting Eyes," are rated for lifting services between +30 °F and +275 °F. These temperature limitations are also referenced in ASME B18.15, "Forged Eyebolts."

Eyebolts manufactured according to ASTM F 541, "Alloy Steel Eyebolts," are rated for temperatures down to -40 °F. ASTM F 541 requires the symbol "A" to denote alloy steel. Some manufacturer's of carbon steel eyebolts employ manufacturing processes that allow usage at a lower service temperature range. Since most manufacturer's of eyebolts do not publish service temperature limitations, it is the responsibility of the user to contact the manufacturer and obtain this information.

Swivel hoist rings (carbon steel or alloy) may have similar temperature limitations as eyebolts. Components of swivel hoist rings are typically manufactured according to national standards, but there is no national standard governing the entire swivel hoist ring. Specifications for swivel hoist rings, including temperature limitations, are specified by the manufacturer.

Before using eyebolts or swivel hoist rings for lifting service, the following steps should be taken:

a. Inspect the eyebolt and identify mark forged in raised character. Identify the manufacturer of eyebolts in question. If manufacturer is unknown, use only for lifts above +30 °F.

b. Determine if manufactured of carbon steel or alloy steel.

c. Validate with the manufacturer the temperature limitations for use.

d. Ensure that eyebolts and swivel hoist rings are used within the manufacturer's temperature limitations.

Adjustable Hardware Inspection and Removal Criteria.—Adjustable hardware shall be visibly inspected at the frequency previously noted. If any damage is found, the hardware shall be removed from service. A designated person shall include in his inspection the following:

a. Missing or unreadable markings.

b. Excessive pitting or corrosion.

c. Heat damage, weld spatter, or evidence of unauthorized welding.

d. Any sign of deformation including bent, twisted, distorted, stretched, elongated, cracked, or broken parts.

e. A 10-percent reduction of the original or catalog dimension at any point.

f. Excessive nicks or gouges.

g. Excessive thread damage or wear.

h. The shank of a eyebolt shall not be undercut and shall be smoothly radiused into the plane of the shoulder.

i. Swivel hoist rings should be able to freely rotate and pivot.

j. Other conditions or visible damage that may cause doubt to its continued use.

Repairs should be made only by the manufacturer or a qualified person. Replacement parts shall meet or exceed the manufacturer's original specifications.

Operation.—Operating practices and guidelines for using adjustable hardware are as follows:

Turnbuckles

a. Prior to use, verify that all components are in good working condition.

b. End fitting threads shall fully engage.

c. When using locking nuts, ensure that they are of the same thread as the turnbuckle ends.

d. Avoid shock loading.

e. Do not side load turnbuckles. The turnbuckle should always be in line with the load and in tension.

f. Rig and secure turnbuckles to prevent unscrewing during lifts. This is especially critical for long-term installations.

g. Avoid letting turnbuckles contact any obstruction or the load during lifting.

h. Avoid dragging on the ground or over an abrasive surface.

i. Use the correct sized wrench in adjusting.

Eyebolts

Manufacturer Installed Eyebolts.—Eyebolts designed for and permanently installed by the manufacturer on existing engineered equipment are considered part of the engineered equipment. They may not meet all requirements specified for rigging hardware. Eyebolts permanently installed on engineered equipment are acceptable for their intended use as long as they pass visual inspection before use.

It is important to know how the manufacturer of engineered equipment intends to use permanently installed eyebolts. Eyebolts installed by the manufacturer to lift only parts of the engineered equipment are not suitable for lifting the completely assembled piece of equipment. When questions arise regarding using manufacturer-installed eyebolts, the equipment manufacturer or qualified engineer should be consulted.

Rigging Eyebolts.—

a. Select eyebolts in accordance with the manufacturer's guidelines.

b. Never exceed the rated load of the eyebolt.

c. Avoid shock loading.

d. Never use eyebolts that appear to be damaged until they are appropriately inspected and accepted as useable.

e. Eyebolts shall be tight and secured against rotation prior to conducting the lift.

f. For sizing and safe work loads, see the *Reclamation Safety and Health Standards*, the *Rigging Manual*, or the manufacturer for guidelines. The *Reclamation Safety and Health Standards* states that only eyebolts "equipped with shoulders or collars shall be allowed for hoisting."

g. The size of the hole shall be checked for the proper size of eyebolt before installation. The condition of the threads in the hole shall be checked to ensure that the eyebolt will secure and that the shoulder can be brought to a snug and uniformly engaged seat. When used on a tapped blind hole, the effective thread length shall be at least 1½ times the diameter of the bolt. When used on a tapped through-hole of less than one diameter thickness, use a nut on the under load side. The nut must be fully engaged. Make sure that the retention nut is of sufficient grade with a minimum strength capable of meeting the safe working load. Torque to manufacturer's recommendations.

h. When installed, the shoulder of the eyebolt must be flush with the surface. When eyebolts cannot be properly seated and aligned with each other, a steel washer or spacer, not to exceed one thread pitch, may be required to put the plane of the eye in the direction of the load when the shoulder is seated. Proper thread engagement must be maintained. Use a washer with approximately the same diameter as the eyebolt shoulder and the smallest inside diameter that will fit the eyebolt shank. Nuts, washers, and drilled plates shall not be used or assembled to make shouldered eyebolts.

i. Angular loading of eyebolts should be avoided. Angular loading occurs in any lift in which the lifting force is applied at an angle to the centerline of the eyebolt shank. Remember that the loading angle affects the stress in the eyebolt. As the horizontal angle decreases, the stress in the eyebolt increases. The working load limit must be reduced when lifting at an angle.

j. When more than one eyebolt is used in conjunction with multiple-leg rigging, spreader bars, lifting yokes, or lifting beams should be used to eliminate angular loading. Where spreaders, yokes, or beams cannot be used, shouldered eyebolts may be used for angular lifting.

k. To keep bending forces on the eyebolt to a minimum, the load shall always be applied in the plane of the eye—never in the other direction.

l. If the hook will not go completely into the eyebolt, use a shackle to avoid loading the hook tip.

m. Slings shall not be reeved through an eyebolt or reeved through a pair of eyebolts. Only one leg should be attached to each eyebolt.

n. A size ⅞-inch eyebolt should not be used because a 7/8-9 unified coarse thread (UNC) may be threaded into a 1-8 UNC tapped hole but will fail when loaded.

Eye Nuts

a. Eye nuts shall be tight and secured against rotation prior to conducting the lift.

b. Avoid shock loading.

c. The eye nut should be used only for in-line loads.

d. Use a flat washer or lock nut to position the eye nut so that the plane of the eye matches the direction of the load.

e. Prior to use, verify that all components are in good working condition.

f. Eye nut threads shall be fully engaged.

Swivel Hoist Rings

Swivel hoist rings shall be provided with instructions from the manufacturer. Read, understand, and follow the manufacturer's instructions before using a swivel hoist ring. Swivel hoist rings are available in both UNC and metric thread sizes, so they shall also be marked to identify the thread type.

a. When used on a threaded hole, the effective thread length shall be at least 1½ times the diameter of the bolt.

b. A nut and washer shall be used in a through hole. When a swivel hoist ring is installed with a retention nut, make sure that the retention nut is of sufficient grade with a minimum strength capable of meeting the safe working load. The nut must have no less than full thread engagement. To develop safe working load, nuts must meet the standards of ASTM A-560 grade D or DH, or SAE grade 8, standard hex.

c. To avoid side loading, center the load in the bail of the swivel hoist ring.

d. The working load limit of the swivel hoist ring must meet or exceed the anticipated angular rigging tension when lifting at an angle. The working load limit must be reduced when used for angular lifting.

e. The swivel hoist ring shall be free to rotate and pivot. Avoid interference with other components.

f. Never use swivel hoist rings that show signs of corrosion, wear, or damage.

g. Tighten the swivel hoist ring to manufacturer torque specifications. A swivel hoist ring bolt may loosen over prolonged service in a permanent installation. Periodically, verify proper torque and retighten the mounting bolt as recommended by the manufacturer.

h. The bushing flange shall make full contact with the load surface.

i. Spacers or washers shall not be used between the bushing flange and the load mounting surface.

j. Avoid shock loading.

k. Prior to use, verify that all components are in good working condition.

3. *Compression Hardware*

General.—Compression hardware used for rigging consists of forged wire rope clips and wedge sockets. Clips (also called clamps) shall meet or exceed the requirements of Federal Specification FF-C-450, "Clamps, Wire Rope." Wire rope clamps come in several different types. Type 1 is a single grip, single saddle wire rope clamp (one single saddle with U-bolt). Type 11 is a double grip, double saddle wire rope clamp (two separate saddles with a U-bolt). Type 111 is a double grip, double saddle wire rope clamp. A Type 11, Class 1 wire rope clamp has integral saddles with two L-shaped clamps; and a Type 11, Class 2 wire rope clamp has separate hex head bolts and nuts. Type IV half clamps are fabricated in matched pairs, and parts are not interchangeable.

For additional information, see the *Reclamation Safety and Health Standards*, the *Rigging Manual*, or manufacturer guidelines.

Wire Rope Clip Assemblies

a. Consult the clip manufacturer, the wire rope manufacturer, or other qualified person prior to use on wire rope with a plastic coating or impregnation.

b. On U-bolt clips, always place the saddle on the live end of the wire rope and the U-bolt on the dead end side.

c. Use the required number of clips, spacing, and turn-back as recommended by the manufacturer, qualified person, or the referenced sources as described. Tighten wire rope clips to the recommended torque.

d. Load test the connection to at least the expected working load after assembly. After unloading, wire rope clips then shall be re-torqued.

Wedge Sockets Assemblies

a. Wedge sockets shall be assembled only by a qualified person according to manufacturer's instructions.

b. Consult the wedge socket manufacturer, wire rope manufacturer, or other qualified person prior to use on wire rope with a plastic coating or impregnation.

c. The live end of the wire rope in the wedge socket cavity shall be in alignment with the socket's pin.

d. Match the proper socket and wedge combination to the wire rope to be installed. Do not interchange different manufacturer's components.

e. The length of the wire rope dead end tail shall be as required by the manufacturer or qualified person.

f. Secure the dead end tail of the wire rope as required by the manufacturer or qualified person. Secure the dead end tail of the wire rope to the live end of the rope such that it restricts the movement of the live end.

g. After assembly and before use, load the connection to fully seat the wedge.

Design Factor.—Wire rope clips and sockets do not have a conventional design factor. They are required to have a minimum connection efficiency of 80 percent. The connection efficiency is based on the wire ropes minimum breaking force.

Proof Testing.—Proof testing of compression hardware is not required. If proof tested, the proof test is based on the wire rope minimum breaking force. Proof test to a minimum of 40 percent, but not to exceed 50 percent, of the wire rope minimum breaking force.

Marking and Tagging.—Each wire rope clip saddle and each wedge socket shall be marked with the manufacturer's name or trademark and the size. Wedge sockets shall also be marked with the model, if required, to match the wedge to the body. Wire rope clip and wedge socket components should be restamped or discarded if the shackle identification becomes illegible.

Hostile Environments.—Before using wire rope clips and wedge sockets in a hostile environment, the manufacturer or a qualified person should be contacted. This includes using at temperatures above 400 °F, below -40 °F, or in chemically active environments.

Compression Hardware Inspection and Removal Criteria.—Compression hardware shall be visibly inspected at the frequency previously indicated. If any damage is found, the compression hardware shall be removed from service. A designated person shall include in his inspection the following:

a. Missing or unreadable markings.

b. Excessive pitting or corrosion.

c. Excessive nicks or gouges.

d. Heat damage, weld spatter, or evidence of unauthorized welding.

e. Any sign of deformation including bent, twisted, distorted, stretched, elongated, cracked, or broken parts.

f. A 10-percent reduction of the original or catalog diameter at any point.

g. Unmatched or unauthorized replacement components. Assembled clamps should contain the same size, type, and class parts.

h. Insufficient number of wire rope clips.

i. Improperly tightened wire rope clips.

j. Indications of slippage.

k. Indications of damage to the wire rope.

l. Improper assembly.

m. Other conditions or visible damage that may cause doubt as to the integrity of the hardware or wire rope.

Repairs should be made only by the manufacturer or a qualified person. Replacement parts shall meet or exceed the manufacturer's original specifications.

Operation.—Operating practices and guidelines for using compression hardware are as follows:

a. Select all compression hardware according to the manufacturer's guidelines.

b. Never exceed the rated load of the piece or the wire rope it secures.

c. Never use compression hardware that appears to be damaged until it is appropriately inspected and accepted as useable.

d. Assemble wire rope clips and wedge sockets and use according to manufacturer instructions, the *Rigging Manual*, and appendix D of the *Reclamation Safety and Health Standards*.

e. Avoid side loading wedge sockets.

f. Avoid shock loading.

g. Avoid letting wire rope clips contact any obstruction or the load during lifting.

h. Avoid dragging clips on the ground or over an abrasive surface. Avoid contact with sharp edges that could damage the wedge socket.

i. Avoid any impact that might dislodge the wedge socket from the body.

j. Using wire rope clips to fabricate slings is prohibited except for situations as explained under the section on slings.

4. Links, Rings, and Swivels

General.—Links and rings include oblong, round, and pear shapes. Swivels include eye and eye and eye and jaw types. The hardware rated load shall be according to the manufacturer's recommendation. Specifications for links and rings are derived from Federal Specification RR-C-271, "Chains and Attachments, Welded and Weldless." Links and rings should be forged steel and weldless. Welded rings are not recommended but may be used if designed by a qualified engineer and subjected to NDT.

Design Factor.—All links, rings, and swivels shall have a minimum design factor of 5. Rings manufactured to the requirements of RR-C-271 have a minimum design factor of 6.

Proof Tests.—Welded links and rings are required to be proof tested by the manufacturer or qualified person prior to initial use. All others do not require a proof test. The proof load shall be a minimum of two times the rated load.

Marking and Tagging.—Each new link, ring, and swivel shall be marked with the manufacturer's name or trademark, the size or rated load, and the grade (if required). Links and rings that have been proof tested shall have a tag or other marking to clearly indicate to the user that proof testing has been done.

Hostile Environments.— Before using steel links, rings, or swivels in a hostile environment, the manufacturer or a qualified person should be contacted. This includes their use at temperatures above 400 °F, below -40 °F, or in chemically active environments.

Link, Ring, and Swivel Inspection and Removal Criteria.—Links, rings, and swivels shall be visibly inspected at the required frequency previously indicated at the start of this section. If any damage is found, the compression hardware shall be removed from service. A designated person shall include in his inspection the following:

a. Missing or unreadable markings.

b. Excessive pitting or corrosion.

c. Heat damage, weld spatter, or evidence of unauthorized welding.

d. Any sign of deformation including bent, twisted, distorted, stretched, elongated, cracked, or broken parts.

e. A 10-percent reduction of the original or catalog dimension at any point.

f. Swivels shall have the ability to freely rotate when not loaded. Also check swivels for loose or missing nuts, bolts, cotter pins, snap rings, or other fasteners.

g. Other conditions or visible damage that may cause doubt as to the integrity of the hardware.

Repairs should be made only by the manufacturer or a qualified person. Replacement parts shall meet or exceed the manufacturer's original specifications.

Operation.—Operating practices and guidelines for using links, rings, and swivels are as follows:

Links and Rings.

a. Select links and rings according to the manufacturer's guidelines. Remember that the loading angle affects the stress in the link or ring. As the horizontal angle decreases, the stress and the resulting effective load in the piece increases.

b. Never exceed the rated load of the link or ring.

c. Never use links or rings that appear to be damaged until they are appropriately inspected and accepted as useable.

d. Avoid contact with obstructions that could damage the link or ring.

e. Avoid shock loading.

f. Avoid dragging shackles on the ground or over an abrasive surface.

g. Assure that the link or ring is of the proper shape and size to seat properly in the hook or lifting device.

h. Do not exceed a 120-degree angle when using multiple slings or rigging hardware off of a link or ring.

i. The horizontal angle of loading should not be less than 30 degrees unless approved by a qualified person.

Swivels

a. Select swivels according to the manufacturer's guidelines. Remember that the loading angle affects the stress in the swivel. As the horizontal angle decreases, the stress and the resulting effective load in the piece increases.

b. Never exceed the rated load of the swivel.

c. Never use swivels that appear to be damaged until they are appropriately inspected and accepted as useable.

d. Swivels are not intended to be rotated under load.

e. Swivels shall only be used for in-line loads.

f. Avoid shock loads.

g. Assure that the swivel is of the proper shape and size to seat properly in the hook or lifting device.

h. Avoid contact with obstructions that could damage the swivel.

5. *Rigging Blocks*

General.—This section applies to rigging blocks only and does not apply to crane hoist blocks. Rigging blocks include tackle, utility, rolling, and snatch blocks and can include hooks, eyes swivels, yokes, shackles, pins, and other hardware. The hardware rated load shall be according to the manufacturer's recommendation. The blocks rated load is the maximum load applied to the main fitting and not the line pull.

Design Factor.—All rigging blocks shall have a minimum design factor of 4.

Proof Tests.—Rigging blocks are not required to be proof tested by the purchaser unless specified.

Marking and Tagging.—Each rigging block shall be marked with the manufacturer's name or trademark, the rated load, and the rope size(s).

Hostile Environments.—Consult the manufacturer or a qualified person before using rigging blocks in a hostile environment. This includes their use at temperatures above 150 °F, below -0 °F, or in chemically active environments.

Rigging Block Inspection and Removal Criteria.—Rigging blocks shall be visibly inspected at the frequency previously indicated. If any damage is found, the rigging block shall be removed from service. Inspect for the following:

a. Missing or unreadable markings

b. Wobble or misaligned sheaves

c. Excessive sheave groove wear

d. Loose or missing nuts, bolts, cotter pins, snap rings, or other fasteners

e. Excessive pitting or corrosion

f. Heat damage, weld spatter, or evidence of unauthorized welding

g. Any sign of deformation including bent, twisted, distorted, stretched, elongated, cracked, or broken parts

h. A 10-percent reduction of the original or catalog dimension at any point

i. Excessive wear, nicks, or gouges

j. Damage to load bearing threads

k. Other conditions or visible damage that may cause doubt as to the integrity of the hardware

Repairs should be made only by the manufacturer or a qualified person. Replacement parts shall meet or exceed the manufacturer's original specifications.

Operation.—Operating practices and guidelines for using links, rings, and swivels are as follows:

a. Select rigging blocks only according to the manufacturer's guidelines. Never exceed the rated load of the block. Remember that the angle formed between the load lines affects the block load. As the included angle decreases, the load on the rigging block increases.

b. Never use rigging blocks that appear to be damaged until they are appropriately inspected and accepted as useable.

c. The rigging block shall be fully engaged and in good working order before applying the full load.

d. Avoid contact with sharp edges or obstructions that could damage the block.

e. Do not side load the rigging block. The block sheave and fittings should always be in line with the load.

f. Avoid shock loading.

g. Avoid dragging load blocks on the ground or over an abrasive surface.

h. Fittings attached to the load line should not contact the block sheaves.

i. The rope should be in the sheave groove when loaded. The minimum D/d[44] ratio between sheave pitch and wire rope diameter is 6.

6. *Rigging Hooks*

General.—Rigging hooks are used as part of rigging tackle, such as sling assemblies, or with below-the-hook lifting devices. See section 6.10, "Overhead and Gantry Cranes," "Hooks," for load hooks on hoists or cranes. Many styles of rigging hooks are available. Some rigging hooks (e.g., grab hooks and sorting hooks) are designed to carry the load near the point as well as in the bowl or saddle of the hook. Rigging hooks shall be used within the limits specified by the manufacturer. Forged alloy steel hooks generally make the best rigging hooks.

[44] Sheave pitch diameter to rope diameter ratio.

Rigging hooks shall meet or exceed the requirements of ANSI/ASME B30.10, "Hooks."

Design Factor.—The rated load for a hook shall be equal to or exceed the rated load of the chain, wire rope, or sling to which it is attached.

Marking and Tagging.—The manufacturer's identification shall be forged or die-stamped on the hook.

Attachments.—Throat latches shall be used, unless application makes using the latch impractical or unnecessary.

Rigging Hook Inspection and Removal Criteria.—Rigging hooks shall be visibly inspected at the frequency previously indicated. If any damage is found, the hook shall be removed from service. Inspect the following:

1. Rigging hooks that are not permanently installed in a sling assembly shall be visually inspected for the following deficiencies before use:
   - Distortions, such as bending or twisting, exceeding 10 degrees from the plane of the unbent hook
   - Increased throat opening exceeding 15 percent
   - Wear exceeding 10 percent of the original dimension
   - Cracks, severe nicks, or gouges
   - Damage, engagement, or malfunction of latch
2. Rigging hooks shall be inspected as a part of the slings to which they are attached.
3. The nondestructive testing of rigging hooks is not routinely required. Rigging hook nondestructive tests may be required by a critical-lift procedure.
4. Welding on hooks, except by the hook manufacturer, is not allowed. Never repair, alter, rework, or reshape a hook by welding, heating, burning, or bending.

Repairs should be made only by the manufacturer or a qualified person. Replacement parts shall meet or exceed the manufacturer's original specifications.

Operation.—Operating practices and guidelines for using rigging hooks are as follows:

a. Loads for rigging hooks shall be equal to or exceed the rated load of the chain, wire rope, or other suspension member to which it is attached. Where this is not feasible, special precautions shall be taken to ensure that the rated load limit of the hook is not exceeded.

b. The safe working load (SWL) for a hook used in its intended manner shall be equal to or exceed the rated load of the chain, wire rope, or other suspension member to which it is attached.

c. The designated SWL applies only when the load is applied in the bowl or saddle of the hook. Center the load in the base (bowl or saddle) of the hook.

d. Avoid shock loading.

e. Do not side load or back load the hook.

f. Ensure that the load is not carried on the throat latch.

6.12 Shop Fabricated Lifting Devices and Rigging Hardware

All lifting devices and rigging hardware shall be designed with a 5:1 factor of safety and according to any applicable ANSI standard. *Reclamation Safety and Health Standards* require that any job-fabricated rigging hardware be designed by a professional engineer. All job-made or repaired wire rope slings and steel chains require marking and proof testing prior to use.

6.13 Below-the-Hook Lifting Devices

Below-the-hook lifters are defined by ASME B30.20, "Below-the-Hook Lifting Devices." They are arranged in four different types of groups as follows:

Group I: Structural and Mechanical Lifting Devices

Structural Lifter—A lifter consisting of an assembly of rigid parts designed to hold and attach a load to a hoisting device.

Mechanical Lifting Device—A mechanism composed of two or more rigid parts that move with respect to each other for attaching a load to a hoisting device.

Group II: Vacuum Lifting Device

A below-the-hook lifting device using a holding force by means of vacuum.

Group III: Magnet, Lifting, Close Proximity Operated

A lifting magnet used in such a fashion that the operator manually positions the magnet on the load and manually guides the magnet and load during a lift.

Group IV: Magnet, Lifting, Remotely Operated

A lifting magnet that does not require the operator or other personnel to be in close proximity to the magnet or its load while the magnet is in use.

This section provides the requirements for Group I, structural and mechanical below-the-hook lifting devices. This type represents the majority of below-the-

hook lifting devices found at power and pumping plants and include, but are not limited to, supporting lifting devices, indentation-type pressure lifting devices, friction-type pressure lifting devices, spreader bars, lifting jigs, lifting yokes, and load test fixtures. Structural and mechanical lifting devices are often one-of-a-kind designs. Slings and rigging hardware that may be components in a below-the-hook lifting device are covered in previous sections of this document.

Using vacuum and magnetic lifting devices is very limited at pumping plants and is not covered in this document.

6.13.1 Design

All specialized devices should be designed and certified for use by a engineer competent in the field and according to the provisions of ASME B30.20. In most cases, ANSI N14.6, which is similar to ASME B30.20, also will apply and may be invoked by the responsible engineer. Lifting devices designed for a specific operation should not be used for any other operation unless approved by a competent engineer.

Load-bearing components of a lifter shall be designed to withstand the stresses imposed by its rated load plus the weight of the lifter, with a minimum design factor of 3, based on the yield strength of the material and with stress ranges within ANSI/AWS D14.1, "Specification for Welding of Industrial and Mill Cranes and Other Material Handling Equipment," standards. Welding shall also be according to requirements of this standard. Guards will be provided for all moving parts, and any wiring and electrical equipment shall comply with the requirements of NFPA 70, "National Electrical Code," Article 610, "Cranes and Hoists."

All existing, site-fabricated, below-the-hook lifting devices should be analyzed by a design engineer to verify that they conform to the required design factor.

6.13.2 Marking

The rated capacity of each lifting device shall be marked on the main structure where it is visible and legible. If the lifting device comprises several items, each detachable from the assembly, each lifting device shall be marked with its rated capacity. At a minimum, a nameplate, name tag, or other permanent marker shall be affixed displaying the following data:

a. Manufacturer's name (contractor's name if fabricated onsite)

b. Lifting device weight (if over 100 pounds)

c. Serial number (if applicable)

d. Drawing number (if applicable)

e. Rated capacity

A rerated lifting device shall be relabeled with the new rated capacity.

6.13.3 Modifications

Any modification or rerating of below-the-hook lifting devices requires documented analysis by a qualified engineer or the manufacturer of the lifting device. Any rerated or modified lifting device requires a new load test. A rerated lifting device also must be appropriately relabeled with the new rated load capacity.

6.13.4 Operations

Below-the-hook lifting devices shall only be operated by qualified designated persons, trainees under direct supervision of a designated person, and/or maintenance and test personnel when necessary. The operator shall be familiar with and instructed in using the device.

a. The condition of the lifting device shall be observed before use and during operation. Any defects found shall be examined and, if it constitutes a hazard, repaired prior to any operation.

b. The lifting device shall be applied to the load according to established procedures.

c. The operator should not leave his position at the controls while a load is suspended unless specific precautions have been implemented.

d. The lifting device shall not be loaded in excess of its rated load (except for test loads) or be used for any application for which it is not designed.

e. Before lifting, the operator shall ensure that lifting device ropes or chains are not kinked and multiple-part lines are not interwoven.

f. Care should be taken to ensure that the load is correctly distributed for the lifting device being used.

g. The lifting device shall not be used for side pulls.

h. The lifting device, when not in use, should be stored in a dry, inside location.

i. Missing or defaced markings or tags shall be replaced.

6.13.5 Inspections

Initial Inspections.—Before initial use, all new, modified, or repaired lifting devices shall be inspected by a designated person to ensure compliance with the provisions of ASME B30.20, "Below-the-Hook Lifting Devices."

Frequent Inspections.—The user shall inspect for the following deficiencies on each shift or before use. In addition, visual observations should be conducted during regular service for any damage or evidence of malfunction that appears between regular inspections. Deficiencies shall be examined carefully to determine whether they constitute a hazard:

a. Structural deformation, cracks, or excessive wear on any part of the lifter

b. Loose or missing guards, fasteners, covers, stops, or nameplates

c. All functional operating mechanisms and automatic hold and release

d. Mechanisms for misadjustments that interfere with operations

e. All load-carrying portions of the device for deformation, cracks, and excessive wear

Periodic Inspections.—A complete inspection of lifting devices shall be performed by a qualified inspector at 12-month intervals for normal service, 6-month intervals for heavy service, and 3-month intervals for severe service. Fixtures not in use do not require periodic inspection, but the inspection must be performed before use. Any deficiencies shall be examined and a determination made as to whether they constitute a hazard. These inspections shall include the requirements of "Frequent Inspections," noted above, and items such as the following, as applicable:

a. Loose bolts or fasteners.

b. Cracked or worn gears, pulleys, sheaves, sprockets, bearings, chains, belts, and welds.

c. Excessive wear of linkages and other mechanical parts.

d. Excessive wear at hoist-hooking points and load-support clevises or pins.

e. Marking as required by ASME B30.20.

f. External evidence of damage to structure, motors, and controls.

g. Lubricate bearings and bushings.

h. Check that all pivot points and level indicators are free to move. For rarely used lifting devices, apply a protective coating to areas prone to corrosion.

i. Clean and paint as required.

Inspection Records.—Make dated inspection reports and records for each periodic inspection and any time the lifting device requires adjustment or repair. The most recent inspection records shall be retained in an equipment maintenance file.

6.13.6 Repairs

Any deficiencies disclosed by the inspection shall be corrected before normal operation of the lifting device is resumed.

6.13.7 Testing

Keep dated reports of operational tests, rated load tests, and manufacturers' certification, as applicable, as long as the device is available for use.

Before initial use, load test and inspect all new, altered, modified, or repaired lifting devices. An operational test also should be performed. Rated load tests shall be done under the direction of a qualified person. A written report furnished by such person confirms the load rating of the lifter. The load rating should not be more than 80 percent of the maximum load sustained during the test. Test loads shall not be more than 110 percent of the rated load unless otherwise recommended be the manufacturer.

At the option of the organization, a manufacturer's certification may be used in lieu of a rated load test only if all the following criteria apply:

a. The lifter is manufactured by a reputable manufacturer that customarily manufactures structural and/or mechanical lift devices.

b. The lifter is a standard readymade item in the manufacturer's normal inventory. (One-of-a-kind items shall be load-tested.)

c. The manufacturer furnishes a written statement, signed and stamped by a registered professional engineer, certifying its structural and operational integrity and that it conforms to the specific requirements of ASME B30.20, "Below-The-Hook Lifting Devices."

6.13.8 Maintenance Files

The maintenance file is a compilation of various documents and records relating to operation, maintenance, inspection, testing evaluation, and repair of the equipment. The methods selected for establishing adequate information retention and retrieval shall be determined by the equipment custodian.

An electronic recordkeeping system may be used. If a computerized maintenance management system such as MAXIMO, is used and maintenance records are not retained in the crane file, the crane file should state where the electronic maintenance records are kept.

The crane maintenance file shall contain, as a minimum, the required current dated periodic inspection records and other documentation to provide the user with evidence of a safe and reliable maintenance program. Keep dated reports of operational tests and the rated load test as long as the device is available for use. Inspection records should be retained in a format and location that provides for ease in accessibility. Maintenance file information should provide a source for comparing present conditions with past conditions to determine whether existing conditions show a trending pattern of wear, deterioration, or other comparable factors that may compromise safe, continued use of the equipment. Length of record retention shall be determined by the equipment custodian's established maintenance program.

6.14 Elevators

FIST Volume 2-10, *Maintenance, Inspection, and Testing of Electric and Hydraulic Elevators*, provides guidance on the maintenance of elevators. section 19 of *Reclamation Safety and Health Standards* lists requirements for the installation and maintenance of elevators and other personnel hoists. Passenger and freight elevators are to be inspected and tested according to ANSI A17.1, "Safety Code for Elevators and Escalators," and ANSI A17.2, "Inspector's Manual for Elevators and Escalators." The inspector shall meet the qualification requirements of ASME/ANSI QEI-1, "Standard for the Qualification of Elevator Inspectors," and shall be certified by an organization accredited by the American Society of Mechanical Engineers according to the requirements of ASME/ANSI QEI-1. If the State or other organization is responsible for elevator inspections, the inspector shall be an employee of that organization or authorized by that organization. Periodic maintenance should be according to the elevator manufacturer's recommendations and any recommendations of the elevator inspector.

1. Routine and Periodic Inspections

Semiannual. Perform routine inspections and tests according to ANSI A17.1, Part X, section 1001 on all electric passenger and freight elevators.

Annual. Perform periodic inspections and tests according to ANSI A17.1, Part X, section 1002 on all electric and hydraulic passenger and freight elevators.

THIS PAGE INTENTIONALLY LEFT BLANK

7. Cathodic Protection

7.1 General

Corrosion is a natural process that can significantly reduce the useful service life of a structure or its components. As structures get older, corrosion will become more evident. There are successful methods which can be employed to mitigate corrosion; therefore, corrosion should not be accepted as a "fact of life." Metals don't deteriorate from age; they deteriorate from corrosion. Fortunately, corrosion can be stopped. Some of the more common methods of corrosion control are design, materials selection, changing the environment, protective coatings, and cathodic/anodic protection.

Protective coatings and cathodic protection are widely used as synergistic corrosion control methods. There are no perfect coatings. Coatings have voids, can be damaged, and deteriorate overtime. The metal exposed at the coating defects is susceptible to corrosion. The corrosion process enlarges the coating defects by undercutting the intact coating adjacent to the defects. Coatings effectively reduce the amount of metal surface area which requires cathodic protection; as a result, less cathodic protection current is required for a well coated structure than for a poorly coated structure. In return, cathodic protection extends the life of the coating by reducing undercutting of the coating and effectively limiting the growth of defective coating areas.

Many metallic components of powerplants experience corrosion. Two of the most corrosive environments of a powerplant are the water which they convey and the soil in which they are constructed. In addition to corrosive environments, the materials of construction have a significant impact on the corrosion experienced. There are numerous items at powerplants that can be cathodically protected. Some powerplants may have been designed with cathodic protection systems; others may not have been. For powerplants that do not have existing cathodic protection systems, many can be retrofitted with a cathodic protection system as the need arises.

This section presents typical operation and maintenance requirements for cathodic protection systems and does not provide an indepth review of corrosion. At the end of this section, definitions and procedures have been included which will introduce the reader to terms and procedures typically associated with cathodic protection systems. For a more indepth understanding of corrosion and its mitigation, the reader is referred to the many books and articles on the subject.

7.2 What Is Corrosion

Corrosion is the deterioration of a material due to a reaction with its environment. The following is limited to the corrosion of metallic materials. Corrosion is a natural electro-chemical reaction between a metal and an electrolyte (usually soil or water) in which a refined metal is returning to its natural state as an ore. The following are the four required components of a corrosion cell:

1. *Anode*

   The anode is the electrode of the corrosion cell which experiences the physical destruction of corrosion (i.e., metal loss). Current flows from the anode surface into the electrolyte taking metal ions with it.

2. *Cathode*

   The cathode is the electrode of the corrosion cell which does not experience the destructive nature of corrosion. Current collects on the cathode surface from the electrolyte. Because current is collecting on the surface, metal ions are not lost.

3. *Metallic Path*

   There must be a metallic path between the anode and cathode. Current flows from the cathode to the anode within the metallic path.

4. *Electrolyte*

   The anode and cathode must be in contact with the same electrolyte. Current flows from the anode to the cathode within the electrolyte.

During the corrosion process, current flows between the anode and cathode, while chemical reactions occur at both the anode and cathode. At the anode, current leaves the metal surface and enters the electrolyte, taking metal ions with it. The metal ions are a part of the corrosion products of the corrosion reaction. Rust is the corrosion product of steel. The current flows through the electrolyte from the anode to the cathode and collects onto the cathode. The current then uses the metallic path to return back to the anode.

Anodes and cathodes can be on the same metal surface or they can be on two different metals which are in contact with one another. Anodes and cathodes can be atoms apart; they can be inches apart; or on large structures, such as pipelines, they can be miles apart.

Corrosion will cease if one of the four required elements of a corrosion cell is eliminated.

7.3 What Is Cathodic Protection

Cathodic protection is a proven method of mitigating corrosion and is the only corrosion control method which can potentially halt ongoing corrosion of a structure. Cathodic protection is a corrosion cell which is used to our benefit. With cathodic protection, the structure that is to be protected is made the cathode of the corrosion cell. Remember, corrosion does not occur at the cathode. Since we still have an operating corrosion cell, we must have an anode. Therefore, an anode material must be installed which will be sacrificed for the sake of the structure to be protected. It should be noted that corrosion is not stopped but is transferred. It is transferred from the structure that is to be protected to sacrificial material which is installed to be consumed.

Since cathodic protection is a corrosion cell, current must flow. As with the corrosion cell, current flows from the anode to the cathode within the electrolyte, and from the cathode to the anode within the metallic path. The electrolyte is the water or soil which our structures are in contact with. The metallic path is the structure itself and the cables that may need to be installed to complete the metallic return path for the cathodic protection system.

There are two types of cathodic protection systems: galvanic anode and impressed current. Both systems require the installation of a sacrificial material as the anode. Galvanic anode cathodic protection requires the installation of galvanic anodes. A galvanic anode is a material which is more electro-chemically active than the structure to be protected. Galvanic anodes use the natural potential difference between the anode material and the structure to cause current to flow. For soil and freshwater applications, zinc and magnesium typically are used as the galvanic anode material. Galvanic anodes can be attached directly to the structure or installed some distance from the structure and connected to the structure through cables.

With an impressed current cathodic protection system, external power is required to supply the current required for cathodic protection. Any dc type power supply can be used for cathodic protection, although, a rectifier typically is used. A rectifier coverts ac power into dc power. Impressed current requires installing anodes and a power supply; the power supply is connected between the structure and anodes. Because external power is providing the driving force for the cathodic protection current, a wide range of anode material can be used. Some commonly used impressed current anode materials include high silicon cast iron, graphite, mixed metal oxides, and platinum.

With both galvanic anode and impressed current cathodic protection systems, the anode must be installed within the same electrolyte that is causing corrosion of the structure. To mitigate soil side corrosion, such as on a pipeline, anodes are installed in the soil. It should be noted that anodes installed in the soil will not protect the inside surface of a buried pipeline; they will only protect the exterior surface of the buried pipeline. To mitigate water side corrosion, such as on pump columns of a wet sump pumping plant, anodes are installed in the water.

7.4 Cathodically Protected Metalwork at Powerplants

From a cathodic protection standpoint, the metalwork at powerplants can be divided into two categories: submerged metalwork and buried metalwork. The category that they fall under depends on what is causing the corrosion—soil or water. Generally, the cathodic protection systems for the submerged metalwork and those for the buried metalwork are separate and independent systems.

All metallic surfaces which contact water or soil can be cathodically protected. Items that are typically cathodically protected at powerplants include:

- Pump columns
- Trash racks
- Traveling water screens
- Air chambers and elevated water tanks
- Intake and discharge manifolds
- Intake and discharge pipelines
- Miscellaneous piping such as drain and fill lines
- Various gates such as radial gates, slide gates, roller gates, etc.

7.5 Typical Operation and Maintenance Requirements

O&M of cathodic protection systems should be conducted by individuals who have, as a minimum, a general knowledge of such systems. Applicable training should be provided for individuals conducting the O&M of cathodic protection systems.

The O&M requirements of a cathodic protection system are dependent on the design of both the structure and cathodic protection system. The O&M requirements contained herein are typical in nature, and standard operating procedures should be specifically written for each individual cathodic protection system.

7.5.1 Operating Criteria

In general, the performance of a cathodic protection system is based on a structure-to-electrolyte potential. Structure-to-electrolyte potentials are determined at various locations on a protected structure, with the locations being dependent on the design of both the structure and cathodic protection system. Other requirements are useful in tracking trends and trouble shooting the system should problems arise.

NOTE: Listed below are the more common operating criteria employed. Not all the criteria listed are used on a single structure. The listed criteria are included for educational purposes only, and the criteria to be employed on a specific structure shall be determined by qualified individuals.

Typical operating criteria for cathodic protection systems are as follows:

a. *Protective structure-to-electrolyte potential* – Protective structure-to-electrolyte potentials should be negative 850 millivolts or more negative, as referenced to a copper/copper sulfate reference electrode.

b. *Polarized structure-to-electrolyte potentials* – Polarized structure-to-electrolyte potentials should be negative 1,100 millivolts or more positive, as referenced to a copper/copper sulfate reference electrode.

c. *Minimum 100-millvolt polarization shift* – The polarization shift can be determined by one of two methods. The polarization shift is determined in the first method by comparing the static and polarized structure-to-electrolyte potentials. The polarization shift is determined in the second method by determining the polarization decay after the cathodic protection is turned off.

NOTE: At no time should the polarized structure-to-electrolyte potential be more negative than negative 1,100 millivolts as referenced to a copper/copper sulfate reference electrode. If the system cannot be adjusted to satisfy the above criteria, the dominate criterion should be the polarized structure-to-electrolyte potential criterion.

7.5.2 Submerged Metalwork Cathodic Protection Systems

The cathodic protection systems for submerged metalwork may not be operated continuously. If the structure is dewatered on a regular schedule, such as being dewatered for winter, the cathodic protection system of the submerged metalwork is not operated while the structure is in the dewatered condition.

Structure-to-electrolyte potentials should be determined at representative locations on all submerged metalwork such as pump columns, traveling water screens, trash racks, ladders, etc. Potentials are generally determined at 5-foot intervals for the submerged height of the metalwork. Potentials should also be determined on the submerged metalwork at locations which are closest to anodes and furthest from anodes.

a. *Galvanic anode cathodic protection system* – A galvanic anode cathodic protection system will be active at times when both the metalwork and anodes are submerged (unless the anodes have been depleted or disconnected from the structure).

   1. *Annual requirements*. The following should be determined and recorded on an annual basis:

      - Protective structure-to-electrolyte potentials.
      - Current output of individual anodes.

b. *Impressed current cathodic protection system* – The cathodic protection systems should be energized during periods when water is present within the structure. If the structure is only partially dewatered which results in both metalwork and anode(s) being submerged, the cathodic protection

system should remain energized. The following assumes that the structure is dewatered in the winter. If the structure is not dewatered, only the monthly and annual monitoring requirements are applicable.

NOTE: When access to a submerged area of the structure is required, the cathodic protection system for the submerged metalwork should be turned off before accessing the submerged area.

---

1. *Spring startup requirement.* The cathodic protection systems should be energized and properly adjusted when the structure is watered up. The following process should be used during the spring startup:

   - Energize cathodic protection systems. If the system was properly adjusted prior to the fall shutdown, adjustment of the system may not be required.
   - Conduct annual and monthly requirements. Adjust system if necessary.
   - Allow the system to operate between 1 to 2 weeks. Conduct annual and monthly requirements. Adjust system if necessary.

2. *Monthly requirements.* During times that the cathodic protection system is energized, the following should be determined and recorded on a monthly basis:

   - Rectifier's current and voltage outputs.
   - Rectifier's settings.
   - Current output of individual anodes.
   - Clean debris from screened areas of rectifier and anode terminal box.

3. *Annual requirements.* For a dewatered system, the annual requirements should be conducted towards the middle of the period for which the structure contains water. The following should be determined and recorded on an annual basis:

   - Conduct monthly requirements.
   - Protective and polarized structure-to-electrolyte potentials on all submerged metalwork.

4. *Fall shutdown requirements.* After the structure has been dewatered, the cathodic protection system should be turned off. If any portion of the metalwork is submerged and any of the anodes are submerged, the cathodic protection system should remain energized.

7.5.3 Buried Metalwork Cathodic Protection Systems

The cathodic protection system for buried metalwork should be continuously operated. Structure-to-electrolyte potentials should be determined at representative locations on all buried metalwork. Test stations typically are installed on buried metalwork to provide electronic access to the buried metalwork for testing purposes. If test stations are not installed at critical locations, electronic assess sometimes can be obtained by contacting exposed metalwork which is electrically continuous with the buried metalwork.

a. *Galvanic anode* – The galvanic anode cathodic protection system for the buried metalwork will be active at all times unless the anodes have been depleted or the anodes have been disconnected from the structure.

   1. *Annual requirements.* The following should be determined and recorded on an annual basis:

      - Current output of individual anodes.
      - Protective structure-to-electrolyte potentials at all test locations on all buried metalwork.

b. *Impressed current* –

   1. *Monthly requirements.* The following should be determined and recorded on a monthly basis:

      - Rectifier's current and voltage outputs.
      - Rectifier's settings.
      - Current output of individual anodes.
      - Clean debris from screened areas of rectifier and anode terminal boxes.

   2. *Annual requirements.* The following should be determined and recorded on an annual basis:

      - Conduct monthly requirements.
      - Protective and polarized structure-to-electrolyte potentials at all test locations on all buried metalwork.

7.6 Data Analysis and Technical Assistance

Data analysis for cathodic protection systems should be conducted by a qualified individual. Reclamation's Technical Service Center (86-68180) can provide technical assistance (including specialized training, data collection, data analysis) on a cost reimbursable basis.

7.7 Definitions and Procedures

7.7.1 Definitions

The following definitions typically are associated with cathodic protection systems.

Corrosion monitoring systems

Corrosion monitoring systems consist of bonded or welded joints for electrical continuity, insulating fittings at selected locations where electrical discontinuity is desired, and test stations to determine structure-to-electrolyte potentials. Corrosion monitoring systems facilitate testing to determine if supplemental corrosion control measures are necessary and for the application of cathodic protection, if required.

Cathodic protection

Cathodic protection is an electrical means of mitigating corrosion of a metal. Cathodic protection is provided by causing direct current to collect on all metallic surfaces of a structure. By collecting direct current on all metallic surfaces of the structure, the structure becomes the cathode of a corrosion cell.

Galvanic anode cathodic protection

Galvanic anode cathodic protection uses the natural potential difference between metals to provide the direct current required for cathodic protection. Magnesium and zinc anodes typically are used in freshwater and soil environments.

Impressed current cathodic protection

Impressed current cathodic protection utilizes an external power source to provide the direct current required for cathodic protection. A rectifier typically is used to convert alternating current into direct current for cathodic protection.

Current interrupter

A device installed into the output circuit of a rectifier which provides a means of opening and closing the circuit at programmable intervals.

Electrolyte

The electrolyte is any medium that can conduct ionic current flow. Water and soil are electrolytes.

Portable voltmeter

Any portable, high-input impedance (10 megohm minimum) voltmeter.

Rectifier

A device which converts alternating current into direct current.

Rectifier tap settings

The position of the link bars of the voltage tap circle on the front of the rectifier. The tap settings limit the voltage output of the rectifier and is adjusted by changing the position of the link bars.

Reference electrode

A reference electrode is used to measure the potential of a structure that is buried or submerged in an electrolyte (soil or water). The reference electrode must be accurate, stable, and reproducible. A submersible reference electrode is a reference electrode that can be used in a totally submerged condition. A copper/copper sulfate reference electrode is commonly used in field measurements because of its ruggedness.

Shunt

A shunt is a calibrated device, placed within a circuit to determine the current flow within the circuit. A shunt has a known, fixed resistance, and its calibration typically is expressed in ohms or amperage/voltage.

Structure

The structure is the item being monitored and/or cathodically protected (e.g., buried pipeline and submerged pump columns).

Structure-to-electrolyte potential

The potential between the structure and electrolyte as referenced to a reference electrode. Also referred to as structure-to-water, structure-to-soil, pipe-to-soil, and tank-to-water potentials.

Polarized structure-to-electrolyte potential

The structure-to-electrolyte potential determined with the cathodic protection system energized and immediately after the cathodic protection current is interrupted.

Protective structure-to-electrolyte potential

The structure-to-electrolyte potential determined with the cathodic protection system energized and cathodic protection current flowing

Static structure-to-electrolyte potential

The structure-to-electrolyte potential determined prior to energizing a cathodic protection system or after the cathodic protection system has been de-energized for a given time period. Also referred to as native structure-to-electrolyte potential.

Test station

Buried structures typically have test stations. Submerged structures may or may not have test stations.

The basic test station is composed of a housing and test cables. The test cables originate from the metallic portion of the structure being monitored

and, as such, provide electronic access to the structure. Test cables generally are installed in pairs—one being sized No. 12 American Wire Gauge (AWG) or larger and the other No. 6 AWG or larger. The No. 6 AWG is used for bonding and applying cathodic protection, and the No. 12 AWG is used for determining structure-to-electrolyte potentials.

On buried pipelines, there may be more than two cables terminated in the test station housing. The following are common sources of additional cables:

1. The test station may contain one or more cables to galvanic anodes.
2. The test station may contain a No. 12 AWG or larger cable originating from a buried permanent reference electrode.
3. Insulating fitting test stations typically have two pairs of test cables, one pair originating upstream of the insulating fitting and the other pair originating downstream of the insulating fitting.
4. Foreign line crossing test stations can have up to five test cables. Two test cables will originate from the structure being monitored, two cables may originate from the foreign line, and one cable may originate from a buried, permanent reference electrode. The test cables originating from the foreign line are installed at the discretion of the foreign line owner and, therefore, may not be installed. A permanent reference electrode may or may not be installed.

7.7.2 Procedures

The following procedures typically are associated with cathodic protection systems.

Anode current output measurement

To determine the current output of an anode, measure the voltage (millivolts) across its shunt located in the anode terminal box using a portable voltmeter and calculate the current output using Ohm's law (I=V/R).[45] Typically, the shunts within the anode terminal box are 10-milliohm shunts; although, the 10-milliohm shunts are typically not marked with a rating. For example, if 25 millivolts is measured across an anode shunt with a resistance of 10 milliohms, 2.5 amps (A) are flowing through the shunt.

Current interrupter installation

To insert a current interrupter into the output circuit of a rectifier, the rectifier must be de-energized. The circuit breaker within the rectifier cabinet can be used to de-energize the rectifier. Remove the common anode cable from the positive terminal of the rectifier and connect it to one terminal of the current interrupter. Connect the other terminal of the current interrupter to the positive terminal of the rectifier using a

[45] I = current (amps); V = voltage (volts); R = resistance (ohms).

separate insulated cable similar in size to the common anode cable. The common anode cable is typically a No. 6 AWG cable.

The "on" cycle of the interrupter is when the rectifier's current output is not interrupted, and the "off" cycle is when the rectifier's current output is interrupted. The "on/off" cycles of the current interrupter should be set so that the cycles can be easily identified with the "on" cycle being at least three to four times that of the "off" cycle (i.e., 30 seconds on and 5 seconds off).

Energize the rectifier and start the current interrupter. Verify that the current output of the rectifier goes to zero during the "off" cycle and cycle times are as desired.

Rectifier current output measurement

To determine the current output of a rectifier, measure the voltage (millivolts [mV]) across the shunt and calculate the current by multiplying the shunt's rating (i.e., 15 A/50 mV) by the measured voltage. The shunt's rating is stamped on the side of the shunt. For example, if 30 millivolts are measured across a shunt rated at 15 A/50 mV, 9 amps are flowing through the shunt.

Rectifier voltage output measurement

To determine the voltage output of a rectifier using a portable voltmeter, measure the voltage (volts) across the positive and negative output terminals of the rectifier.

Rectifier voltage output adjustment

To change the output of a rectifier, the voltage output of the rectifier must be adjusted. The following procedure is for a manually tapped rectifier; if another type of rectifier is used, the procedure will be different. For a manually tapped rectifier, adjustment is accomplished by changing the rectifier's tap setting. When adjusting the rectifier's tap setting, the rectifier must be de-energized. The circuit breaker within the rectifier cabinet can be used to de-energize the rectifier. To increase the rectifier's voltage output, its tap setting is increased (e.g., from B to C or 3 to 4.) To decrease the rectifier's voltage output, its tap setting is decreased (e.g., from D to C or 2 to 1). Energize the rectifier once the rectifier's tap setting has been changed.

Reference electrode integrity

To obtain valid structure-to-electrolyte data, an accurate, stable, and reproducible reference must be used. The reference electrode integrity of all reference electrodes should be determined prior to use. Reference electrode integrity or accuracy is determined by comparing it to a freshly prepared, portable copper/copper sulfate reference electrode. In general, the potential difference (millivolts) between the two reference electrodes is determined when they are in contact with a common electrolyte.

Portable copper/copper sulfate reference electrodes

The accuracy of two freshly prepared, portable copper sulfate reference electrodes should be determined by submersing the tips of the two reference electrodes in a nonmetallic container of water. Measure the potential difference (millivolts) between the two reference electrodes with a portable voltmeter. The integrity of the reference electrodes is acceptable when the potential difference between the two is within 10 millivolts.

Once the integrity of the reference electrodes has been verified, identify one reference electrode as the standard. The other is used for all field measurements which require a freshly prepared, portable copper/copper sulfate reference electrode. The standard reference electrode is set aside and is used only to determine the accuracy of the other portable reference electrode which is used for field measurements.

Permanent reference electrode

When checking permanent reference electrodes, they either need to be removed for testing; or the cathodic protection system must be de-energized. If the permanent reference electrode is connected to a rectifier, it must be disconnected from the rectifier before testing. The negative of the portable voltmeter should be connected to the freshly prepared, portable copper/copper sulfate reference electrode; and the positive terminal should be connected to the permanent reference electrode. Determine and record the magnitude, polarity, and meter connection (i.e., negative to portable). Consideration should be given to replacing permanent reference electrodes when the potential determined is greater than 50 millivolts.

To check a buried reference electrode, place a freshly prepared, portable copper/copper sulfate reference electrode directly above the permanent reference electrode. The ground at point of contact should be saturated with tap water to reduce contact resistance.

To check a submerged reference electrode, place a freshly prepared, portable copper/copper sulfate reference electrode adjacent to the permanent reference electrode. The submerged reference electrodes can be tested in place or removed and tested as describe under portable reference copper/copper sulfate reference electrodes.

Structure-to-electrolyte potential measurement

Also referred to as structure-to-water, structure-to-soil, pipe-to-soil, and tank-to-water potentials.

To determine a structure-to-electrolyte potential, connect the negative terminal of a portable voltmeter to the portable reference electrode and connect the positive terminal to the structure contact. The portable reference

electrode should be positioned as close as possible to the structure being monitored. Record the polarity, magnitude, and location of potential.

For buried metalwork installations, the portable reference electrode should contact the soil directly over the buried metalwork. The soil at point of reference electrode contact should be saturated with tap water to reduce contact resistance.

Protective structure-to-electrolyte potentials are determined with the cathodic protection system energized and the cathodic protection current flowing.

Polarized structure-to-electrolyte potentials are determined with the cathodic protection system energized and immediately after the cathodic protection current is interrupted. To obtain polarized potentials, a current interrupter generally is inserted into the output circuit of the rectifier.

7.8 Inspection Checklist

Equipment	Recommended Interval	Reference
Submerged Metalwork Cathodic Protection – Galvanic Anode System		
Protective structure to electrolyte potentials	Annual	Reclamation Practice
Current output of individual anodes	Annual	Reclamation Practice
Submerged Metalwork Cathodic Protection – Impressed Current System		
Rectifier current and voltage outputs	Monthly	Reclamation Practice
Rectifier setting	Monthly	Reclamation Practice
Current output of individual anodes	Monthly	Reclamation Practice
Clean debris from terminal boxes	Monthly	Reclamation Practice
Protective and polarized structure to electrolyte potentials on all submerged metalwork	Annual	Reclamation Practice
Buried Metalwork Cathodic Protection – Galvanic Anode System		
Protective structure to electrolyte potentials at all test locations on all buried metalwork	Annual	Reclamation Practice
Current output of individual anodes	Annual	Reclamation Practice
Buried Metalwork Cathodic Protection – Impressed Current System		
Rectifier current and voltage outputs	Monthly	Reclamation Practice
Rectifier setting	Monthly	Reclamation Practice
Current output of individual anodes	Monthly	Reclamation Practice
Clean debris from terminal boxes	Monthly	Reclamation Practice
Protective and polarized structure to electrolyte potentials at test locations on all buried metalwork	Annual	Reclamation Practice

THIS PAGE INTENTIONALLY LEFT BLANK

8. Fire Systems

8.1 General

Periodic inspection, testing, and maintenance of plant fire protection systems are critical to ensuring a functional system that will provide a reasonable degree of protection for life and property. Hydroelectric power facilities include fire protection systems that are comprised of both mechanical and electrical equipment and systems. Pumps, piping, valves, sprinklers, and other appurtenant fixtures and equipment represent the mechanical portion of a plant's fire protection and suppression systems. These systems are required to have scheduled inspections, testing, and maintenance.[46] This chapter provides the minimum requirements for the routine inspection, testing, and maintenance of the mechanical portion of most common fire protection systems that protect hydroelectric facilities.

Historically, hydroelectric powerhouses have been constructed of reinforced concrete and masonry with limited amounts of furniture and combustible sources and, thus, generally are considered a low fire hazard structure. Still, fires at hydroelectric plants are not uncommon.[47] Fire hoses and extinguishers generally are used for protecting and suppressing structural fires. Specific fire hazards within hydroelectric plants are somewhat limited and usually can be defined into four areas: main power generators or pumps, oil storage and oil processing rooms, transformers, and paint and flammable liquid storage rooms. These higher-risk fire areas most often are designed with specific, separate fire protection and suppression systems.

Inspection, testing, and maintenance of fire protection systems and equipment should be scheduled and documented through the facilities maintenance management program, such as Reclamation's MAXIMO program. Original records shall be maintained for the life of the system. Subsequent records shall be retained for a minimum period of 1 year after the next inspection, test, or maintenance.

Each facility must have a written, detailed, and effective fire prevention plan in place.[48] Since many facilities do not have their own trained fire fighting brigades but rely on the services of community fire departments services, close coordination and cooperation with local fire fighting departments is essential.

---

[46] NFPA 851, *Recommended Practice for Fire Protection for Hydroelectric Generating Plants, 2000*, 851 2-4.1.2; *Reclamation Safety and Health Standards*, section 10.3.2.

[47] *CO_2 Fire Protection Study for Hydrogenerators – Report of Findings*, Reclamation, 1984.

[48] NFPA 851, *Recommended Practice for Fire Protection for Hydroelectric Generating Plants, 2000*, 851 2-4.1.2; *Reclamation Safety and Health Standards,* section 10.1.1.

8.2 Carbon Dioxide Fire Suppression Systems

Special fire protection systems, such as carbon dioxide normally are used to protect generators and motors. In older plants, automatic CO_2 fire suppression systems were installed in oil storage and processing rooms. NFPA 12, *Standard on Carbon Dioxide Extinguishing Systems, 2005,* no longer allows CO_2 use in normally occupied space in new installations and highly regulates entrance in existing installations.[49] Due to the hazards associated with using CO_2, using automatic CO_2 fire suppression systems in oil storage and oil processing rooms, transformer vaults, and other locations that occasionally are visited by personnel is not recommended. Reclamation recommends removing existing active systems in these locations.[50]

Requirements and instructions for inspection, testing and maintenance of CO_2 fire suppression systems can be found in FIST Volume 5-12, *CO_2 System Operation and Maintenance,* and other pertinent referenced documentation. Users should refer to this document for detailed inspection, testing, and maintenance guidelines. Refer to table 6 of this document and the manufacturer's instructions for a summary of testing, maintenance, training, and drill requirements.

8.3 Fire Suppression Systems for Transformers

Although fires of this type are rare, powerplant oil-filled transformers pose a particularly acute fire risk to personnel and property due to the potentially catastrophic size and temperatures involved with this type of fire. Subsequent environmental risks due to oil spillage and air pollution also increase liability. Water deluge and mist systems (water spray fixed systems) normally are provided for outdoor oil-filled transformers. Oil-filled transformers that are installed inside of a facility must be installed and protected according to the requirements of NFPA 70, *National Electric Code,* Article 450 and NFPA 851, *Recommended Practice for Fire Protection for Hydroelectric Generating Plants.* For large capacity transformers, this usually requires installation within a fire rated vault.

Requirements and instructions for inspection, testing, and maintenance of transformer fire protection systems can be found in FIST Volume 3-32, *Transformer Fire Protection,* and other pertinent referenced documentation. Users should refer to this document for detailed inspection, testing, and maintenance guidelines.

[49] NFPA 12 *Standard on Carbon Dioxide Extinguishing Systems 2005,* section 4.1.1, 4.1.4.

[50] FIST Volume 5-12, *CO_2 System Operation and Maintenance*, section 6.

8.4 Fire Suppression Systems for Paint and Oil Storage and Transfer Rooms

Oil storage and processing rooms have a potentially high hazard for fire because they contain such large quantities of transformer and lubricating oil. Because of the intense heat and large amount of fuel associated with an oil room fire, water deluge or water mist systems are recommended over traditional wet pipe sprinkler systems. Wet pipe sprinkler systems or water mist fire protection systems may be found in some locations but are less common. Normally, with deluge systems, heat sensing fire detectors initiate flow by actuation of an electrically actuated pressure valve (deluge valve).

Determine the type of system and refer to the appropriate table in this document and the manufacturer's instructions for a summary of inspection, testing, and maintenance requirements.

8.5 Clean Agent Fire Extinguishing System

Clean agent fire suppression systems are often found in some control rooms, computer rooms, and within certain control cabinets. They do not include fire extinguishing systems that use carbon dioxide or water. Originally, Halon was the standard extinguishing agent used in this type of system. Halon was phased out after restrictions were placed on its use under the Montreal Protocol of September 16, 1987, as amended. Today, there is a number of different clean agents that have taken the place of Halon. Existing quantities of Halon are closely regulated and monitored.

Different clean agents produce differing degrees of hazardous atmosphere when discharged. Thus when used, suitable safeguards are required; and unnecessary exposure to these agents shall be avoided. As with carbon dioxide suppression systems, safeguards shall be provided to prevent entry into areas after discharge, and safety items such as personnel training, warning signs, pre- and post-discharge alarms, self-contained breathing apparatus, evacuation plans, and fire drills shall be used.

Clean agent systems are usually pre-engineered. It is recommended that the design, installation, service, and maintenance of clean agent systems be performed by those knowledgeable and trained in that area of technology.

Refer to table 7 of this document and the manufacturer's instructions for a summary of testing, maintenance, and training and drill requirements.

8.6 Life Safety Code

NFPA 101, *Life Safety Code*, addresses life safety from fire. Although normally associated with matters of egress, it also lays out requirements for modifications, modernization, or renovation of existing facilities and addresses other fire

prevention considerations essential to life safety. This code should be reviewed for compliance prior to any building modifications, modernization or renovations, changes in occupancy, hazard, water supply storage commodity or arrangement, or other condition that might affect the adequacy of the installed systems.

NFPA 851, "Recommended Practice for Fire Protection for Hydroelectric Generating Plants," classifies hydroelectric generating plants as follows:

- General areas are considered as special purpose industrial occupancies.
- General office structures should be considered as business occupancies.
- Open and underground structures such as tunnels should be considered as occupancies in special structures.
- Warehouses should be considered as storage occupancies.

The need for egress, fire detection and suppression systems, sprinkler systems, stairwell ventilation requirements, fire barriers and doors, signage, etc. are all partially determined by this code.

Existing life safety features and equipment such as sprinklers, fire alarm systems, standpipes, etc. shall be periodically tested and maintained according to this and other NFPA codes.

8.7 References and Standards

The following standards and references apply to fire protection systems predominantly found in hydroelectric plants:

- NFPA 25, "Standard for the Inspection, Testing and Maintenance of Water-Based Fire Protection Systems"
- NFPA 101, "Life Safety Code"
- NFPA 72, "National Fire Alarm Code"
- NFPA 851, "Recommended Practice for Fire Protection for Hydroelectric Generating Plants"
- NFPA 110, "Standard for Emergency and Standby Power Systems"
- NFPA 13, "Standard for Installation of Sprinkler Systems"
- NFPA 115 "Standard for Water Spray Fixed Systems for Fire Protection"
- NFPA 750, "Standard on Water Mist Fire Protection Systems"
- NFPA 20, "Standard for Installation of Stationary Pumps for Fire Protection"
- NFPA 22, "Standard for Water Tanks for Private Fire Protection"

- NFPA 1962, "Standard for the Care, Use, and Service Testing of Fire Hose Including Couplings and Nozzles"
- NFPA 10, "Portable Fire Extinguishers"
- NFPA 12, "Carbon Dioxide Extinguishing Systems"
- NFPA 2001, "Clean Agent Fire Extinguishing Systems"
- NFPA 70, "National Electric Code"
- FIST 4-1B, *Maintenance Scheduling for Electrical Equipment*
- FIST 5-12, *CO_2 System Operation and Maintenance*
- FIST 3-32, *Transformer Fire Protection*
- FIST 5-2, *Firefighting and Fire Prevention*
- Power Equipment Bulletin 28, *Engine Generator Maintenance, Inspection and Testing*
- *CO_2 Fire Protection Study for Hydrogenerators – Report of Findings*, Reclamation, 1984
- *Reclamation Safety and Health Standards*, section 10, "Fire Prevention and Protection"

8.8 Inspection, Testing, and Maintenance of Sprinkler Systems

Table 3.—Summary of Sprinkler System Inspection, Testing, and Maintenance

Component	Test or Maintenance	Frequency	Reference
Sprinklers	Inspection	Annually (including spares)	NFPA 25 5.2.1
	Test – sprinklers Test – sprinklers, fast response Test – sprinklers, extra-high temperature Test – sprinklers, dry	At 50 years and every 10 years thereafter or replace At 20 years and every 10 years thereafter or replace 5 years Every 10 years	NFPA 25 5.3.1.1.1; 5.3.1.1.2; 5.3.1.1.3 RSHS, table 10-1
Pipes, Fittings, and Hangers	Inspection	Annually	NFPA 25 5.2.2; 5.2.3
Gauges	Inspection	Weekly/monthly (dry, preaction, and deluge systems) Monthly (wet pipe system)	NFPA 25 5.2.4.2 and 5.2.4.3 NFPA 25 5.2.4.1
	Test – Replace or calibrate	5 years	NFPA 25 5.3.2

Table 3.—Summary of Sprinkler System Inspection, Testing, and Maintenance (continued)

Component	Test or Maintenance	Frequency	Reference
Valves	Inspection	Weekly/monthly (control valves	NFPA 25, table 12.1 RSHS, table 10-1
	Replace or calibrate	5 years	NFPA 25-5.3.1.1.1.3
	Maintenance	Annually or as needed	NFPA 25, table 12.1
Alarm Devices	Inspect	Quarterly	NFPA 25-5.2.6
	Test	Quarterly-pressure/water motor gong type Semiannually vane type	NFPA 25-5.3.3
Fire Department Connections	Inspection	Quarterly	NFPA 25, table 12.1
Main drain	Test	Annually	NFPA 25, table 12.1
Low Point Drains-Dry Pipe	Maintenance	Annually prior to freezing	NFPA 25-12.4.4.3.3
Sprinkler Obstructions	Maintenance	5 years or as needed	NFPA 25-5.2.1.2
Buildings	Inspection	Annually, prior to freezing	NFPA 25-5.2.5

8.8.1 Sprinklers

Inspect from the floor level for signs of leakage, corrosion, paint, physical damage, and orientation.

Replace if any of these factors are noted. Spares shall be of the proper type and number and include a sprinkler wrench.

Remove any unacceptable obstructions to the spray patterns.

8.8.2 Pipe and Fittings

Inspect from the floor level for signs of leakage, corrosion, physical damage and misalignment. Inspect for pipes that may have objects resting or hanging from it. Remove these sources of external load.

The sprinkler piping inspection should include inspection of pipe hangers and seismic braces. Inspect for damaged or loose hangers and bracing.

8.8.3 Gauges

The life expectancy of a gauge is 10 to 15 years. Gauges that have greater than 3-percent error over full scale should be recalibrated or replaced.

8.8.4 Alarm Devices

Water-flow devices of the mechanical water motor gong and pressure switch type shall be inspected and tested quarterly. Inspect for physical damage. Water-flow devices of the vane-type shall be tested semiannually. On wet pipe systems, the inspector's test connection shall be used to create a flow condition unless other circumstances such as freeze conditions exist. In this instance, the bypass connection can be used.

8.8.5 Buildings

Buildings with wet pipe sprinkler systems shall be inspected annually prior to freezing weather. Check all openings including windows, doors, skylights, ventilators, attics, and spaces under buildings where water-filled sprinkler piping could be exposed to freezing temperatures and verify that adequate heat is available. Verify the freezing point of the antifreeze solution in piping that is filled with this solution.

8.9 Inspection, Testing, and Maintenance of Fire Pumps

Unless connected to a municipal fire water system, most powerplants rely on fire pumps to supply pressurized water for fire suppression. Water typically is taken from the tail race through dedicated water supply piping. Generally, the fire water pumps are electric motor driven.

Table 4 summarizes the minimum requirements of routine inspection, testing, and maintenance of fire pump assemblies.

Table 4.—Summary of Fire Pump Testing, Maintenance, Training, and Drills

Component	Test or Maintenance	Frequency	Reference
Fire Pump System	Inspection	Weekly	NFPA 25-8.2.(2)
Pump Operation	Test – no flow	Weekly	NFPA 25-8.3.1
	Test – with flow	Annually	NFPA 25-8.3.3.1; RSHS, table 10-1
Pump House, Ventilation and Heating Louvers	Inspection	Weekly	NFPA 25-8.2.2(1)
Motor, Controller, Electrical and Mechanical Systems, Diesel Engine,	Maintenance	Annually	NFPA 25-8.5

Test results shall be recorded and retained.

Each plant shall establish a preventive maintenance program for each fire pump assembly. This program shall incorporate manufacturer's recommendations that are included in the operation and maintenance manual. Where manufacturer's recommendations are not available, refer to table 8.5.3 of NFPA 25, "Standard for the Inspection, Testing, and

Maintenance of Water-Based Fire Protection System." This table provides minimum inspection, testing, and maintenance requirements.

Maintenance shall be performed immediately after testing.

8.10 Inspection, Testing, and Maintenance of Water Spray, Fixed Systems

As previously mentioned, water spray, fixed systems are routinely found in powerplants where they are routinely used as oil storage room and transformer deluge systems. These systems have fixed nozzles in lieu of sprinkler style heads. Design requirements for this type of system can be found in NFPA 15, "Standard for Water Spray Fixed Systems for Fire Protection."

Table 5.—Summary of Water Spray Fixed System Inspection, Testing, and Maintenance

Component	Test or Maintenance	Frequency	Reference
Valves – Backflow Preventers, Control, Alarm, Deluge, Check, Pressure Reducing	Inspection	See section 8.15, table 10	See section 8.15, table 10
	Test	See section 8.15, table 10	See section 8.15, table 10
	Maintenance	See section 8.15, table 10	See section 8.15, table 10
Fire Pump – Electric Motor, Drive, etc.	Inspection	See section 8.9, table 4	See section 8.9, table 4
	Test	See section 8.9, table 4	See section 8.9, table 4
	Maintenance	See section 8.9, table 4	See section 8.9, table 4
Tanks- Pressure, Gravity Suction	Inspection	Weekly/monthly/annually	See NFPA 25, chapter 9
	Test	5 years	See NFPA 25, chapter 9
	Maintenance	Annually	See NFPA 25, chapter 9
Water Supply Systems	Inspection	Weekly/annually	RSHS, table 10-1; NFPA-25 10.2.6.1-2
	Test (flow)	Annually	RSHS, table 10-1; NFPA 25-7.3.2
Nozzles	Inspection	Monthly	NFPA 25-10.2.1-2; 10.2.5
	Test	Annually	NFPA 25-10.2.1.6; 10.3
Detection Systems	Inspection, test, maintenance		FIST 4-1B; NFPA 72
Drainage	Inspection	Quarterly	NFPA 25-10.2.8
System Piping, Fittings, Hangers, Supports	Inspection	Quarterly	NFPA 25-10.2.4.1-2; 10.2.1.1-2; 10.6.1-2
Strainers	Inspection	Manufacturer instruction	NFPA 25-10.2.7
	Test	Annually	NFPA 25-10.2.7; 10.2.1.7
	Maintenance	Annually 5 years (baskets/ screen)	NFPA 25-10.2.7; 10.2.1.7 NFPA 25-10.2.1.8

Table 5.—Summary of Water Spray Fixed System Inspection, Testing, and Maintenance (continued)

Component	Test or Maintenance	Frequency	Reference
Flushing	Test	Annually	NFPA 25-10.2.1 3
Main Drain	Test	Quarterly/Annually	NFPA 25-12.2.6; 12.2.6.1
Water Spray System	Maintenance	Annually	NFPA 25-10.1.4
	Test	Annually	NFPA 25-10.3
Manual Release	Test	Annually	NFPA 25-10.3.6
Water Flow Alarm	Test	Quarterly	NFPA 25,chapter 5

Refer to NFPA 25, chapter 10.4, for minimum inspection, testing, and maintenance requirements for ultra-high-speed water spray systems.

8.11 Inspection, Testing, and Maintenance of Private Hydrants and Fire Service Mains

Table 6.—Summary of Private Water Fire Service Main Inspection, Testing, and Maintenance

Component	Test or Maintenance	Frequency	Reference
Hose Houses	Inspection	Quarterly	NFPA 25-7.2.2.7
	Maintenance	Annually	NFPA 25-7.4.5
Hydrants (Wet and Dry Barrel, Wall)	Inspection	Semiannually/each operation	RSHS, table 10-1; NFPA 25-7.2.2.4-5
	Maintenance	Annually	NFPA 25-7.4.3
	Test (flow)	Flow annually	RSHS, table 10-1; NFPA 25-7.3.2
Monitor Nozzles	Inspection	Semiannually	NFPA 25-7.2.2.6
	Maintenance	Annually	NFPA 25-7.4.4
	Test	Flow annually	NFPA 25-7.3.3
Piping (Exposed and Underground)	Inspection[1]	Annually	NFPA 7.2.2.1-2
	Test (flow)	5 years	NFPA 7.3.1
Mainline Strainers	Maintenance	Annually/each operation	NFPA 25-7.4.2
	Inspection	Annually/each operation	NFPA 25 7.2.2.3

[1] Underground piping cannot effectively be inspected on a routine basis; thus, flow tests may be beneficial.

Reclamation Safety and Health Standards, section 10, "Fire Prevention and Protection," table 10-1, requires a semiannual inspection where NFPA's requirement for inspections of dry hydrants is annually.

Flow tests on underground and exposed piping are made at flows similar to those expected in an actual fire. Friction loss comparisons between those seen during the actual test and those calculated for that particular pipe with consideration of age should be made.

Refer to NFPA 25, chapter 9 for minimum inspection testing and maintenance requirements for water storage tanks.

8.12 Inspection, Testing, and Maintenance of Standpipe and Hose Systems

A standpipe system is the piping, valves, hose connections, and equipment in a plant, with one end connected to a hose or nozzle and the other end to a water supply system, with the explicit purpose of extinguishing a fire. There are both wet and dry standpipe systems depending whether the system is normally "dry" or contains water at all times.

The National Fire Protection Association sets codes and standards for the design, maintenance, inspection, and testing of these systems as it does for all fire protection systems.

Table 7.—Summary of Standpipe and Hose System Inspection, Testing, and Maintenance

Component	Test or Maintenance	Frequency	Reference
Valves (All Types)	Maintenance	Annually/as needed	NFPA, table 12.1
Valves (Pressure Control)	Inspection	Weekly/monthly	NFPA, table 12.1
	Test	5 years	NFPA, table 12.1
Valves (Pressure Reducing)	Test	5 years	NFPA, table 12.1
Valves (Pressure Regulating)	Inspection	Quarterly	NFPA, table 12.1
Piping	Inspection	Quarterly	NFPA 25-6.2.1
Hose	Inspection	Monthly	RSHS, table 10-1; NFPA 1962
	Test (occupant use hose)	5 years/3 years thereafter	RSHS, table 10-1; NFPA 1962-4.3.2
	Test (attack, supply and forestry hose)	Annually	NFPA 1962 4.1.2
Hose (Connections)	Inspection	Quarterly	NFPA, table 12.1
	Maintenance	Annually/as needed	NFPA 6.2.2

Table 7.—Summary of Standpipe and Hose System Inspection, Testing, and Maintenance (continued)

Component	Test or Maintenance	Frequency	Reference
Hose (Storage Device)	Inspection	Annually	NFPA 1962
	Test	Annually	NFPA 1962
Hose (Nozzle)	Inspection, test	Annually	NFPA 1962, 6.1.2
Cabinet	Inspection	Annually	NFPA 1962
Alarm Device	Test	Quarterly	NFPA, table 12.1
Hydrostatic Test	Test	5 years	RSHS, table 10-1; NFPA 25-6.3.2
Flow Test	Test	5 years	NFPA 25-6.3.1
Main Drain Test	Test	Annually	NFPA, table 12.1

The requirements for maintenance, inspection, and testing of fire hose, nozzles, and couplings can be found in NFPA 1962, "Inspection, Care, and Use of Fire Hose, Couplings, and Nozzles and the Service Testing of Fire Hose."

Reclamation Safety and Health Standards provide inspection requirements for fire hose stations in section 10, "Fire Prevention and Protection," table 10-1. This inspection criteria is more stringent in some areas than NFPA requirements, requiring for example, a monthly inspection instead of NFPA's requirement for annual inspections for fire hose stations.

Accurate hose records are required on each hose. Each occupant use hose shall be tagged with information which includes the manufacturer's name, part numbers, date put in service, date of each service test, who performed the test/inspection, repair as well as other pertinent information. Electronic bar code files are permitted in lieu of tags. Attack and supply hoses require similar requirements.

After each use and before being placed back in service, the hose, connections, and nozzle shall be inspected, cleaned, and dried.

Refer to NFPA 1962, "Inspection, Care, and Use of Fire Hose, Couplings, and Nozzles and the Service Testing of Fire Hose," for service test procedures and details and other information on hoses and attachments.

8.13 Inspection, Testing, and Maintenance of Carbon Dioxide Systems

Table 8.—Summary of Carbon Dioxide Systems Inspection, Testing, and Maintenance

Component	Test or Maintenance	Frequency	Reference
CO_2 System	Inspection	Monthly	NFPA 12-4.8.1; RSHS, table 10-1
	Functional tests	Annually	NFPA 12-4.8.3.2; RSHS, table 10-1
	Discharge concentration test	After initial installation, uprate or major modification of the CO_2 system; when maintenance indicates their advisability	NFPA 12-4.4.3.3.4; NFPA 12-4.8.3.2.2
High-Pressure Cylinders	Weigh	Semiannually	NFPA 12-4.8.3.4.1
	Hydrostatic test	5 years; 12 years if continually in service and undischarged	NFPA 12-4.6.5.1
Low-Pressure Systems	Inspection – pressure gauges	Weekly	NFPA 12 4.8.3.5.1
	Calibration – pressure gauges	Annually	Reclamation Practice
Control System Including Initiation Devices, Batteries, etc.	Inspection, test, and maintenance	Per NFPA 72 requirements	NFPA 12-4.8.3.6; Refer to FIST 4-1b
Flexible Hoses	Pressure test	5 years	NFPA 12-4.8.2.3
Routing Valves	Manual operation	Annually or after any maintenance	NFPA 12-4.8.3.2; Reclamation Practice
Training	O&M personnel	Annually	Reclamation Practice
Drills	Fire prevention plan	Annually	Reclamation Practice

Refer to FIST Volume 5-12, *CO_2 System Operation and Maintenance*, for additional details and requirements.

The manufacturer's maintenance and test procedure should be followed for testing and maintenance of the system. Manufacturer's instructions may have test requirements at more frequent intervals.

Prior to any testing or maintenance on a CO_2 system, proper safety procedures shall be reviewed. Lock out procedures shall be followed to prevent accidental

discharge of the system. Initial and delayed discharge isolation valves should be closed and locked out prior to testing. It is also prudent to disconnect the firing heads from the high-pressure initial and delayed discharge control bottles.

Maintenance and inspection reports are required to be maintained and filed.

All plant personnel who are involved with inspection, testing, and maintenance of CO_2 fire suppression systems should be thoroughly trained on the operation and maintenance of the system.

8.14 Inspection, Testing, and Maintenance of Clean Agent Fire Extinguishing

Table 9.—Summary of Clean Agent Extinguishing Systems Inspection, Testing, and Maintenance

Component	Test or Maintenance	Frequency	Reference
Clean Agent Systems	Inspection and tests	Annually	NFPA 2001 6.1.1
	Mechanical inspection Flow and pressure test Enclosure inspection test Electrical inspection Electrical functional tests Control panel power source test	After initial installation, uprate or major modification of the CO_2 system	NFPA 2001
Containers and Cylinders	Agent quantity and pressure	Semiannually	NFPA 2001 6.1.3
	Hydrostatic test	5 years; If continually in service and undischarged, visual inspection every 5 years	NFPA 2001 6.2.1, 6.2.2
Hoses	Test	5 years	NFPA 2001 6.3.2.1
Enclosure	Inspection	Annually	NFPA 2001 6.4
Training	O&M personnel	Annually	Reclamation Practice; NFPA 2001 6.6
Drills	Fire Prevention Plan	Annually	Reclamation Practice

The manufacturer's maintenance and test procedure should be followed for testing and maintenance of the system. Manufacturer's instructions may have test requirements at more frequent intervals. Agent discharge tests are not required.

Maintenance and inspection reports are required to be maintained and filed. Container and cylinder tests require written report and tagging of cylinders.

For the most part, halocarbon clean agents have different and often stricter regulations than inert gas clean agents, especially with regard to collection and disposal. Refer to NFPA 2001 for specific instructions.

Clean agent extinguishing systems shall be maintained in full operating condition at all times. Any problems or impairments or enclosure penetrations shall be timely corrected.

Safe procedures shall be used during all work on the clean agent extinguishing system, including the handling and recharging of clean agent containers. Personnel working in a protected enclosure shall have specific training on clean agent safety issues.

Inspection, test, and operation and maintenance personnel that are assigned these tasks with clean agent extinguishing systems shall be thoroughly trained.

8.15 Inspection, Testing, and Maintenance of Fire System Valves and Components

Table 10.—Summary of Valve Inspection, Testing, and Maintenance

Component	Test or Maintenance	Frequency	Reference
Backflow Prevention	Inspection (non-supervised/ supervised, locked)	Weekly/monthly	NFPA 25-12.6.1
	Test	Annually	NFPA 25-12.6.2
	Maintenance		NFPA 25-12.6.3.1
Check Valves	Inspection (interior)	5 years	NFPA 25-12.4.2.1
Control Valves	Inspection	Weekly/monthly (if with locks or tamper switches)	NFPA 25-12.3.2.1
	Test	Annually	NFPA 25-12.3.3.1
	Maintenance	Annually	NFPA 25-12.3.4
Deluge/Preaction Valves	Inspection	Enclosure, gauges-weekly (daily in cold weather) Monthly-exterior Annually/5 years – interior 5 years – strainers, filters, orifices	NFPA 25-12.4.3.1.3 NFPA 25-12.4.3.1.6 NFPA 25-12.4.3.1.7 NFPA 25-12.4.3.1.8

Table 10.—Summary of Valve Inspection, Testing, and Maintenance (continued)

Component	Test or Maintenance	Frequency	Reference
Deluge/Preaction Valves (continued)	Test	Quarterly – priming, air pressure Annually – flow	NFPA 25-12.4.3.2.1, 10 NFPA 25-12.4.3.2.2
	Maintenance	Annually	NFPA 25-12.4.3.3.2
Alarm Valves	Inspection	Monthly – exterior 5 years – interior, strainers, filters, orifices	FIST 4-1B; NFPA 72; NFPA 25-12.4.1.1; NFPA 25-12.4.1.2
Water-Flow Alarm	Test	Quarterly	NFPA 25-12.2.7
Supervisory Switches	Test	Semiannually	NFPA 25-12.3.3.5.1; NFPA 72
Pressure Reducing/Regulating Valves			
Dry Pipe Valves/Quick Opening Devices	Inspection	Daily/weekly (cold weather) – enclosure Monthly – exterior Annually – interior 5 years – strainers, filters, orifices	NFPA 25-12.4.4.1.1 NFPA 25-12.4.4.1.4 NFPA 25-12.4.4.1.5 NFPA 25-12.4.4.1.6
Main Drain Test	Test	Annually/quarterly	NFPA 25, table 12.3.3.4; 12.2.6

THIS PAGE INTENTIONALLY LEFT BLANK

9. Powerplant Heating and Ventilating Systems

9.1 Introduction

The heating and ventilation system in hydroelectric plants are not only important for the comfort of those working in the plants but also are important to ensure the proper operating temperature of plant equipment. Ventilating equipment may vary in complexity, but below are some of the more common components.

9.2 Inspection Checklist

Equipment	Recommended Interval	Reference
1, Fans	Annual, monthly	Reclamation Practice
2. Motors	Annual, monthly	Reclamation Practice
3. V- Belts	Monthly	Reclamation Practice
4. Cooling or Heating Coils	Annual	Reclamation Practice
5. Dampers	Annual	Reclamation Practice
6. Filters	Monthly	Reclamation Practice

1. *Fans*

   Monthly. Lubricate as required. Check for vibration or excessive noise.

   Annual. Check and clean fan blades as necessary. Check vibration or excessive noise. Replace bearings or balance as required. Clean intake louvers and screens. Check and clean fan blades as necessary. Assure that intake area is free from contaminants.

2. *Motors*

   Monthly. Lubricate bearings as required. Check for vibration or excessive noise.

3. *V-belts*

   Monthly. Check belts for tension and alignment. Adjust as required. Check condition of belts. Replace complete set of belts as required. Check for wear on pulleys. Replace as required.

4. *Cooling or Heating Coils*

   Annual. Inspect and clean exterior of coils. Check for leaks.

5. *Dampers.*

   Annual. Inspect and clean all dampers. Check for freedom of motion and lubricate at bearing points. Fire dampers should have the fusible link temporarily removed and the damper checked to ensure that it will close under its own weight.

6. *Filters.*

   Monthly. Inspect and replace as required.

10. Mechanical Drawings

10.1 General

Generally, current mechanical drawings are not as critical as current electrical drawings. In many, if not most cases, modifications made to mechanical equipment is visible and apparent to the maintenance personnel; but in cases where modifications are not apparent, the safety of the maintenance personnel can be compromised if current drawings are not available. An example of this is the rerouting of high-pressure water, air, or oil piping. Also, instructional drawings, such as provided for gate and valves, should always be kept current.

10.2 Maintenance Schedule for Mechanical Drawings

Maintenance or Test	Recommended Interval
Critical mechanical drawings and schematics	Current and available

THIS PAGE INTENTIONALLY LEFT BLANK

11. Engine Generators

11.1 General

Engine generators are critical systems at powerplants, dams, and other water related facilities. They must be maintained and tested regularly to ensure they will perform as expected. Manufacturer and NFPA standards should be followed. Engine generators provide essential power to supply critical loads in the event of loss of the normal power source. Spillway or outlet gates/valves may need to be operated for water release purposes with engine generator power. Powerplant critical loads such as sump pumps, fire pumps, and battery chargers also are dependent on reliable power. Engine generators also may be used to power unit auxiliaries and the generator excitation system for blackstart generators assigned to restore the power system after a blackout.

11.2 Maintenance Schedule for Engine Generators

Mechanical maintenance on engine generators should be completed as outlined in PO&M Form 400. It is available on the Intranet at http://intra.usbr.gov/forms/pomforms.html. This form lists weekly, monthly, quarterly, semiannual, and annual maintenance tasks based on the two levels:

- Level 1 Emergency power supply systems (EPSS) maintenance, inspection, and testing are required where failure of the emergency power supply system could result in the loss of human life or serious injuries (NFPA 110, section 4.4.1). This includes engine-generators required for water release purposes (via gates/valves) and for support of plant systems related to personnel safety. Level 1 EPSS maintenance, inspection, and testing also applies to EPSS at plants essential to power system blackstart restoration plans and to plants where significant damage would occur upon failure of the emergency power supply system.

- Level 2 EPSS maintenance, inspection, and testing are applicable where failure of the emergency power supply system is less critical to human life and safety and where flexibility greater than Level 1 is permissible (NFPA 110, section 4.4.2). Level 2 maintenance, inspection, and testing apply where the emergency power supply system is not essential for water release purposes (via gates/valves), where blackstart capability is not required, and where no significant damage to the plant would occur if the system fails.

THIS PAGE INTENTIONALLY LEFT BLANK