EM 1110-2-1424
29 January 2016

US Army Corps of Engineers®
ENGINEERING AND DESIGN

Lubricants and Hydraulic Fluids

ENGINEER MANUAL

THIS PAGE INTENTIONALLY LEFT BLANK

DEPARTMENT OF THE ARMY
U.S. Army Corps of Engineers
Washington, DC 20314-1000

EM 1110-2-1424

CECW-CE

Manual
No. EM 1110-2-1424

29 January 2016

Engineering and Design
LUBRICANTS AND HYDRAULIC FLUIDS

1. Purpose. This manual provides guidance on lubricants and hydraulic fluids to engineering, operations, maintenance, and construction personnel, and other individuals responsible for the U.S. Army Corps of Engineers (USACE) civil works equipment.

2. Applicability. This manual applies to all HQUSACE elements, major subordinate commands, districts, laboratories, and field operating activities having responsibilities for the design and construction of civil works projects.

3. Distribution Statement. This manual is approved for public release with unlimited distribution.

4. References. References are in Appendix A.

5. Discussion. This manual is intended to be a practical guide to lubrication with enough technical detail to allow personnel to recognize and easily discern differences in performance properties specified in manufacturers' product literature so that the proper lubricant for a particular application is selected. The manual is intended for designers and operators of navigation structures and hydropower facilities. The manual describes basic characteristic properties of oils, hydraulic fluids, greases, environmentally acceptable lubricants, and their additives. It examines the mechanics of hydrodynamic, boundary, and elastohydrodynamic lubrication. Certain specific chapters are dedicated to the discussion of single topics. Chapter 2 explores the mechanisms of wear. Chaper 9 discusses turbine oils. Chapter 13 discusses environmentally acceptable lubricants. Chapter 12 discusses self-lubricated bearings. Chapters 14 through 17 are dedicated to lubricant specification and selection, and requirements of lubricants for equipment currently in use at USACE civil works facilities. Chapter 17 specifically addresses operation and maintenance considerations.

FOR THE COMMANDER:

11 Appendices
(See Table of Contents)

D. PETER HELMLINGER
COL, EN
Chief of Staff

This manual supersedes EM 1110-2-1424, dated 28 February 1999, and all previous versions.

THIS PAGE INTENTIONALLY LEFT BLANK

DEPARTMENT OF THE ARMY
U.S. Army Corps of Engineers
Washington, DC 20314-1000

EM 1110-2-1424

CECW-CE

Manual
No. EM 1110-2-1424

29 January 2016

Engineering and Design
LUBRICANTS AND HYDRAULIC FLUIDS

TABLE OF CONTENTS

	Paragraph	Page
Chapter 1. Introduction		
Purpose.	1-1.	1-1
Applications.	1-2.	1-1
References.	1-3.	1-1
General.	1-4.	1-1
Mandatory Requirements and Deviation from Design Criteria.	1-5.	1-2
Appendices.	1-6.	1-2
Chapter 2. Friction and Mechanisms of Wear		
Friction and Objective of Lubrication.	2-1.	2-1
Sliding Friction.	2-2.	2-1
Friction and Factors Affecting Friction.	2-3.	2-4
Rolling Friction.	2-4.	2-5
Wear.	2-5.	2-6
Types of Wear.	2-6.	2-6
Chapter 3. Principles of Lubrication		
Lubrication and Lubricants.	3-1.	3-1
Hersey-Stribeck Curve.	3-2.	3-2
Hydrodynamic Lubrication.	3-3.	3-3
Thrust Bearings and Journal Bearings.	3-4.	3-6
Boundary Lubrication.	3-5.	3-7
Elastohydrodynamic (EHD) Lubrication.	3-6.	3-8
Mixed Lubrication.	3-7.	3-10
Chapter 4. Lubricating Oil Basics and Production		
Types of Oil.	4-1.	4-1

	Paragraph	Page
Properties and Characteristics of Lubricating Oils.	4-2.	4-2
Synthetic Oils.	4-3.	4-6
Other Properties of Oils.	4-4.	4-12
Lubricating Oil Degradation.	4-5.	4-13
Oil Classifications and Grading Systems.	4-6.	4-15
Oil Refining.	4-7.	4-16
Chapter 5. Lubricant Additives		
Introduction.	5-1.	5-1
Additive Classifications.	5-2.	5-1
Oil Classification.	5-3.	5-2
Surface Protective Additives.	5-4.	5-4
Performance-Enhancing Additives.	5-5.	5-6
Lubricant Protective Additives.	5-6.	5-7
Specialized Classifications and Manufacturer Product Data.	5-7.	5-7
Precautions.	5-8.	5-10
Chapter 6. Filtration		
Oil Filtration, Purification, and Water Control.	6-1.	6-1
Methods for Particle Counting.	6-2.	6-2
Filter Ratings and General Discussion.	6-3.	6-5
Filtration and Purification.	6-4.	6-7
Water Contamination and Removal.	6-5.	6-11
Cleaning and Flushing.	6-6.	6-15
Chapter 7. Oil Monitoring and System Sampling and Testing		
Description.	7-1.	7-1
Guidelines for When to Sample.	7-2.	7-2
How To Sample.	7-3.	7-3
Where to Sample.	7-4.	7-4
Test Requirements.	7-5.	7-6
Test Warning Limits.	7-6.	7-8
Oil Monitoring Program.	7-7.	7-15
Laboratories.	7-8.	7-15
Chapter 8. Oil Storage, Handling, Disposal, and Safety		
Lubricant Storage.	8-1.	8-1
Storage and Degradation of Lubricants.	8-2.	8-1
Categories and Applications of Lubrication Storage.	8-3.	8-5
Lubricant Handling.	8-4.	8-8
Safety and Health Hazards.	8-5.	8-9

	Paragraph	Page
Environmental Regulations.	8-6.	8-12

Chapter 9. Turbine Oils

Description.	9-1.	9-1
Functions.	9-2.	9-1
Turbine Oil Basics.	9-3.	9-7
Guidance on the Use of UFGS Turbine Oil Specification.	9-4.	9-8
Turbine Oil Selection.	9-5.	9-9
Turbine Oil Consolidation.	9-6.	9-10
Essential Properties of Turbine Oil.	9-7.	9-10
Other Properties of Used Turbine Oils.	9-8.	9-11
Monitoring Program.	9-9.	9-11
Purification and Filtration.	9-10.	9-11
Operating Temperature.	9-11.	9-12
Storage and Handling Specific to Turbine Oils.	9-12.	9-12
Degradation.	9-13.	9-13

Chapter 10. Hydraulic Fluids

Purpose of Hydraulic Fluids	10-1.	10-1
Physical Characteristics.	10-2.	10-1
Quality Requirements.	10-3.	10-2
Use of Additives	10-4.	10-4
Types of Hydraulic Fluids	10-5.	10-4
Hydraulic Fluid Selection.	10-6.	10-8
Hydraulic Fluid Consolidation.	10-7.	10-9
Cleanliness Requirements.	10-8.	10-9
Hydraulic Oil Degradation.	10-9.	10-11
Purification and Filtration.	10-10.	10-14
Operating Temperature Considerations.	10-11.	10-15

Chapter 11. Grease

Description.	11-1.	11-1
Function.	11-2.	11-1
Grease Characteristics.	11-3.	11-2
Fluid Lubricants.	11-4.	11-8
Soap Thickeners.	11-5.	11-8
Complex Soap.	11-6.	11-9
Additives.	11-7.	11-10
Types of Greases.	11-8.	11-10
Compatibility.	11-9.	11-12
Grease Application Guide.	11-10.	11-12

	Paragraph	Page
Chapter 12. Solid Lubricants and Self-Lubricated Materials		
General.	12-1.	12-1
Solid Lubrication.	12-2.	12-1
Self-Lubricated Materials.	12-3.	12-6
Materials.	12-4.	12-11
Fabrication.	12-5.	12-12
Failure Modes.	12-6.	12-20
Design.	12-7.	12-23
Applications.	12-8.	12-26
Chapter 13. Environmentally Acceptable Lubricants		
General.	13-1.	13-1
Definition of Environmentally Acceptable (EA) Lubricants.	13-2.	13-3
Labeling Program.	13-3.	13-5
Biodegradation.	13-4.	13-6
Toxicity.	13-5.	13-8
Bioaccumulation.	13-6.	13-10
EA Base Fluids and Additives.	13-7.	13-11
Properties of Available EA Lubricants.	13-8.	13-17
Changing from Conventional to EA Lubricants.	13-9.	13-19
Selecting an Environmentally Acceptable Fluid.	13-10.	13-21
Sheen Generation.	13-11.	13-22
Transformer Oils.	13-12.	13-23
Chapter 14. Gear Lubrication		
General.	14-1.	14-1
Gear Types.	14-2.	14-2
Gear Wear and Failure.	14-3.	14-7
Gear Lubrication.	14-4.	14-11
Applications.	14-5.	14-15
Gear Lubricant Maintenance.	14-6.	14-17
Chapter 15. Bearing Lubrication		
General.	15-1.	15-1
Plain Bearings.	15-2.	15-1
Rolling-Contact Bearings.	15-3.	15-6
Grease Selection for Bearings.	15-4.	15-8
Oil Selection for Bearings.	15-5.	15-10
Lubricant Selection, Viscosity, and Speed Considerations.	15-6.	15-14
Bearing Degradation.	15-7.	15-15

	Paragraph	Page
Chapter 16. Miscellaneous Lubrication Applications		
Introduction.	16-1.	16-1
Stormwater Pumps and Motors.	16-2.	16-1
Couplings.	16-3.	16-3
Hoist and Cranes.	16-4.	16-5
Wire Rope Lubrication.	16-5.	16-7
Chain Lubrication.	16-6.	16-13
Trashrake Systems and Traveling Water Screens.	16-7.	16-16
Gates and Valves.	16-8.	16-16
Navigation Lock Gates, Culvert Valves, and Dam Gates.	16-9.	16-24
Transformer and Circuit Breaker Insulating Oil Degradation.	16-10.	16-27
Chapter 17. Operation, Maintenance, and Selection Considerations		
Introduction.	17-1.	17-1
Maintenance Schedules.	17-2.	17-1
Information Sources for Lubricants.	17-3.	17-2
Principles of Lubricant Selection.	17-4.	17-3
Lubricant Consolidation.	17-5.	17-7

Appendix A – References A-1

Appendix B – Grease and Oil Selection for Machinery B-1

Appendix C – ECB 2006-11 Tainter Gate Trunnion Lubrication C-1

Appendix D – Lubrication of Powerplant Equipment Bureau of Reclamation FIST 2-4 July 2004 ..... D-1

Appendix E – EPA 800-R-11-002, Environmentally Acceptable Lubricants (November 2011) E-1

Appendix F – Maintenance Scheduling for Mechanical Equipment Bureau of Reclamation FIST 4-1A January 2009 ..... F-1

Appendix G – ERDC/CERL TR-04-28, *Performance Problems with Group II Hydrocracked Turbine Oils in Corps of Engineers Hydropower Facilities* (December 2004) G-1

Appendix H – Evaluation of Environmentally Acceptable Lubricants (EALs) for Dams Managed by the U.S. Army Corps of Engineers H-1

Paragraph Page

Appendix I – Evaluation of Environmentally Acceptable Lubricants (EALs) Non-Hydropower Uses for Dams Affected by the 2014 Riverkeeper's Settlement I-1

Appendix J – Environmentally Acceptable Lubricant Grease for Hydropower Applications J-1

Appendix K – Glossary of Terms, Acronyms, and Abbreviations K-1

LIST OF FIGURES

Figure 2-1. Friction Force and Motion. 2-2

Figure 2-2. Free Body Diagram of a Block on an Inclined Plane, Where m=mass and g=Gravitational Force. 2-3

Figure 2-3. Rolling Friction. 2-5

Figure 2-4. Three-Body Abrasive Wear. 2-7

Figure 2-5. Two-Body Abrasive Wear. 2-8

Figure 2-6. Diagram of Adhesion Wear. 2-8

Figure 3-1. Hersey-Stribeck Curve. 3-2

Figure 3-2. Hydrodynamic Lubrication and Fluid Film Thickness. 3-4

Figure 3-3. Fluid Film Lubrication. 3-5

Figure 3-4. Pivoting Shoe Thrust Bearing. 3-6

Figure 3-5. Hydropower Tilting Pad Bearings. 3-6

Figure 3-6. Journal Bearing. 3-7

Figure 3-7. Example of Boundary Lubrication between Two Moving Surfaces — Asperities in Contact between Two Surfaces. 3-8

Figure 3-8. Rolling Body Diagram. 3-9

Figure 4-1. Viscosity Comparison Chart. 4-4

Figure 4-2. Typical Refining Process. 4-17

Figure 5-1. Typical Lubricant Composition. 5-1

Figure 6-1. ISO 4406:99 Method for Rating Fluid Cleanliness. 6-3

Figure 6-2. Typical Mechanical Filter for a Hydraulic System. 6-8

Figure 6-3. Vacuum Dehydrator. 6-10

Figure 6-4. Kidney Filter for a Gearbox. 6-11

Figure 6-5. Cavitation Damage on a Hydraulic Pump. 6-14

Figure 7-1. Diesel Engine for Pump Drive. 7-1

LIST OF FIGURES (CONTINUED)

Figure 7-2. Gear Box (2:33,800 hp)..... 7-2

Figure 7-3. Sample Valve in an Ideal Location. 7-4

Figure 7-4. Minimess sample Valve. 7-5

Figure 7-5. Varnish in a System That Resulted When ASTM D7155, "Oil Compatibility Testing," Was Not Performed. 7-8

Figure 7-6. ISO Cleanliness Code. 7-9

Figure 7-7. Extreme Foaming in the Sump of a System in which ASTM D892 Antifoaming Properties Were Not Adequate. Some Other Issues to Check Are Leaking Pump Suction, Improper Returns to Reservoir, and Pump Cycle Time. Water, Oxidation, and Contamination Can All Damage the Antifoaming Properties. 7-13

Figure 8-1. Hydroelectric Plant Turbine Oil Storage Tanks. 8-6

Figure 8-2. Typical Oil Storage Rack. 8-6

Figure 8-3. Automatic Grease-Dispensing System for Lock Machinery and Miter Gate Pintle 8-8

Figure 8-4. Typical Filter Cart. 8-9

Figure 9-1. Bonneville Dam – Hydroturbine Units. 9-2

Figure 9-2. Tilting Pad Thrust Bearing Assembly 9-3

Figure 9-3. Damaged Tilting Pad Bearings. 9-4

Figure 9-4. Orbit Plot from X and Y Proximity Probes Monitoring Shaft Displacement on a Hydrodynamic Bearing. The Plot Shows Eight Revolutions of the Shaft. The Loop Indicates That There Is a Bearing Rub during Each Revolution. During the Bearing Rub, Hydrodynamic Lubrication Is Lost..... 9-4

Figure 9-5. Kaplan Turbine..... 9-6

Figure 9-6. Francis Turbine Runner Transported into Powerhouse. 9-7

Figure 9-7. Generator Rotor (460-ton)..... 9-7

Figure 9-8. Representative Graph of Antioxidants vs. Oxidation Rate of Oil..... 9-14

LIST OF FIGURES (CONTINUED)

Figure 10-1. Recommended Maximum ISO 4406 Cleanliness Codes, Courtesy of Eaton. 10-10

Figure 10-2. Cleaning and Flushing Unit for Hydraulic Systems. 10-11

Figure 10-3. Sources of Contamination 10-13

Figure 10-4. Recommended Filter Placement. 10-15

Figure 12-1. Civil Works Self-Lubricated Materials. 12-6

Figure 12-2. Textile-Reinforced Resin Self-Lubricated Materials. 12-12

Figure 12-3. Mandrel Wrapping To Create Tube Material. 12-13

Figure 12-4. Stacking To Create Sheets and Blocks of Stock Material. 12-13

Figure 12-5. Cured Material on Mandrel. 12-14

Figure 12-6. Machining of Fabric-Reinforced Resin Materials. 12-14

Figure 12-7. Extruded Self-Lubricated Materials. 12-15

Figure 12-8. Plastic Extrusion Process. 12-16

Figure 12-9. Sprayed Homogeneous Coating Self-Lubricated Materials. 12-17

Figure 12-10. Bronze Alloy Backer Material with Roughened Surface Ready for Spray Coating. 12-17

Figure 12-11. Spraying of Coating. 12-18

Figure 12-12. Spray Coated Parts. 12-18

Figure 12-13. Finished Part. 12-18

Figure 12-14. Plugged Metal Self-Lubricated Materials. 12-19

Figure 12-15. Inserting Self-Lubricated Plugs. 12-20

Figure 12-16. Crushing Failure of Textile-Reinforced Composite Self-Lubricated Component. 12-21

Figure 12-17. Disbonding Failure from Improper Housing Surface Preparation. 12-22

Figure 12-18. PTFE Spring-Loaded Deflection Seal (Indicated by Arrow). 12-26

LIST OF FIGURES (CONTINUED)

Figure 12-19. MVN West Closure Complex Sector Gate Pintle (36-in. Diameter). 12-26

Figure 12-20. The Dalles Dam Miter Gate Pintle (22-in. Diameter). 12-27

Figure 12-21. The Dalles Dam Miter Gate Pintle Installed. 12-27

Figure 12-22. Bonneville Dam Floating Mooring Bit. 12-28

Figure 12-23. Floating Mooring Bit Self-Lubricated Guide Rollers. 12-28

Figure 12-24. Spillway Tainter Gate Trunnion Bushing Freeze Fitting. 12-29

Figure 12-25. Spillway Tainter Gate Trunnion Bushings. 12-29

Figure 12-26. Spillway Tainter Gate Trunnion Thrust Washer. 12-30

Figure 12-27. Spillway Tainter Gate Rope Connection Pin Bushing. 12-30

Figure 12-28. John Day Dam Vertical Lift Gate. 12-30

Figure 12-29. John Day Gate Top Guide Rollers. 12-31

Figure 12-30. John Day Gate Bottom Guide Rollers (Self-Aligning). 12-31

Figure 12-31. Vertical Lift Gate Guide Blocks. 12-32

Figure 12-32. Wicket Gate Operating Mechanism Bushings. 12-32

Figure 12-33. Kaplan Turbine Hub Bushings. 12-33

Figure 12-34. Water Lubricated Bearing. 12-33

Figure 13-1. Bonneville Dam Spillway on Columbia River. 13-2

Figure 13-2. Transformer at a Power Plant. 13-24

Figure 14-1. Spur Gears. 14-3

Figure 14-2. Spur Gears, Side View. 14-4

Figure 14-3. Sector Gear and Rack (Rack and Pinion). 14-4

Figure 14-4. Helical Gears. 14-5

Figure 14-5. Herringbone Gears. 14-5

Figure 14-6. Example of Bevel Gear (on Left). 14-6

LIST OF FIGURES (CONTINUED)

Figure 14-7. Worm Gear Reducer with Worm Wheel Removed (Left) and in Place (Right). 14-7

Figure 14-8. Gear Reducer in Need of Cleaning and Flushing. 14-17

Figure 15-1. Tainter Gate Trunnion Bearing. 15-2

Figure 15-2. Typical Journal Bearings. 15-3

Figure 15-3. Typical Plain Bearing. 15-4

Figure 15-4. Radial and Thrust Bearing (Courtesy of Kingsbury Bearings). 15-4

Figure 15-5. Typical Rolling Element Bearing. 15-6

Figure 16-1. Automatic Grease Lubrication System for a Vertical Pump. 16-2

Figure 16-2. Gear Coupling with Grease Fitting. 16-5

Figure 16-3. Pedestal Mounted Crane for Lifting Bulkheads. 16-6

Figure 16-4. Wire Ropes for Lifting a Tainter Gate. 16-8

Figure 16-5. Wire Rope Lubricator. 16-11

Figure 16-6. New Roller Chain Using Stainless Steel Pins and Aluminum Bronze Sidebars. 16-13

Figure 16-7. Gear Reducer for Miter Gate Drive. 16-25

Figure B-1. Wire Rope Lubricant – Penetrating Type. B-11

Figure B-2. Panolin Hydraulic Fluid. B-15

LIST OF TABLES

Table 4-1. ISO Viscosity Grades. 4-3

Table 4-2. Summary of Synthetic Lubricants for Industrial and Automotive Applications. 4-7

Table 4-3. Synthetic Lubricant Summary. 4-7

Table 4-4. API Group Types. 4-16

Table 5-1. Types of Additives. 5-2

Table 5-2. Types of Additive Oil Required for Various Types of Machinery. 5-9

Table 6-1. ISO 4406 Range Numbers. 6-3

Table 6-2. Typical Required ISO Ratings for Hydraulic Equipment. 6-5

Table 6-3. Typical Saturation Points of Different Fluids. Note That These Can Vary Greatly Depending on Temperature and Type of Oil. 6-12

Table 6-4. Water Prevention and Removal Techniques. 6-13

Table 7-1. Test Requirements. 7-6

Table 7-2. Recommended ISO 4406 Cleanliness Codes for Equipment and Components. 7-10

Table 7-3. New Turbine Oil Properties. 7-11

Table 8-1. Causes of Lubricant Deterioration and Their Prevention. 8-2

Table 8-2. Above-Ground Storage Classifications. 8-14

Table 8-3. Underground Storage Classifications. 8-15

Table 9-1. Essential Properties of Turbine Oil 9-10

Table 10-1. Relative Comparisons of Various Types Environmentally Acceptable Fluids. 10-7

Table 10-2. Recommended ISO Cleanliness Codes. 10-10

Table 11-1. NLGI Grease Classification. 11-3

Table 11-2. ASTM Tests for Grease Characteristics 11-4

Table 11-3. Simple Soap Thickener Characteristics. 11-9

LIST OF TABLES (CONTINUED)

Table 11-4. Grease Compatibility from Bureau of Reclamation FIST 2-4. 11-13

Table 11-5. Grease Application Guide. 11-14

Table 11-6. Recommended Grease Properties for Wicket Gates, Radial Gates, Butterfly Valves (Recommended Grease Properties from Bureau of Reclamation FIST 2-4.)..... 11-15

Table 13-1. Summary of Differential Biodegradation Rates by Lubricant Base Oils 13-7

Table 13-2. Summary of Comparative Toxicity of Base Oils. 13-9

Table 13-3. USFWS and USEPA Acute Toxicity Rating Scales for Aquatic Organisms..... 13-10

Table 13-4. Summary of Bioaccumulation Potential by Base Oil Types. 13-11

Table 13-5. Biodegradability and Thermal Stability of EA Base Oils. 13-12

Table 13-6. Relative Comparisons of Various Types EA Lubricants. 13-17

Table 14-1. Common Gear Oils for Gear Reducers. 14-16

Table 14-2. Gear Oil Viscosity Classification System. 14-16

Table 15-1. Choice of Lubricant. 15-5

Table 15-2. General Guide for Choosing Between Grease and Oil Lubrication. 15-8

Table 15-3. Methods of Liquid Lubricant Supply. 15-11

Table 15-4. Effect of Environmental Conditions on Choice of a Suitable Type of Grease. 15-17

Table 16-1. Recommendations for the Lubrication of Gear, Spring-Type, Chain Couplings 16-4

Table 16-2. Lubrication of Wire Ropes in Service. 16-12

Table 16-3. Desirable Grease Properties for the Folsom Dam Trunnion Bearings. 16-19

Table 17-1. Factors Affecting Lubricant Selection..... 17-5

Table B-1. Common Additive Requirements by Application. B-6

Table B-2. General Guide to Selecting NLGI Grade Based on Speed Factor and Operating Temperature. B-7

LIST OF TABLES (CONTINUED)

Table B-3. Typical Minimum Viscosity Values for Hydraulic Components. B-13

Table K-1. Technical Terms Used in This Manual..... K-1

Table K-2. Acronyms and Abbreviations Used in this Manual..... K-58

CHAPTER 1

Introduction

1-1. Purpose.

a. This manual provides engineering personnel with design guidance to select, specify, inspect, and approve lubricants and hydraulic fluids used for U.S. Army Corps of Engineers (USACE) machinery and equipment. It provides operation and maintenance staff with guidance for regular and scheduled maintenance of lubricants.

1-2. Applications. This manual applies to all HQUSACE elements, major subordinate commands, districts, laboratories, and field operating activities having responsibilities for the design and construction of civil works projects.

1-3. References. References are in Appendix A. References include technical papers, engineering guidance, engineering manuals, industry standards, and textbooks.

1-4. General.

a. The document is a revision and update of the information presented in the 28 February 1999 version of EM 1110-2-1424. This manual is intended to be a practical guide to lubrication with enough technical detail to allow personnel to recognize and easily discern differences in performance properties specified in manufacturers' product literature so that the proper lubricant for a particular application is selected. The manual is intended for designers and operators of civil works facilities. The manual defines and illustrates friction, wear, and corrosion, and how they damage contact surfaces to cause premature equipment failure.

b. Certain specific chapters are dedicated to the discussion of single topics.

(1) Chapter 2 explores the mechanisms of wear.

(2) Chapter 9 specifically addresses turbine oils for the hydropower industry, including design requirements and selection criteria. Section 9-4 includes guidance on the use of Unified Facilities Guide Specification (UFGS) 48 13 19.00, *Turbine Oil* (May 2014), a guide specification now available for turbine oils.

(3) Chapter 10 provides information on the design and selection of hydraulic fluids, including specialized hydraulic fluids such as fire resistant fluids.

(4) Chapter 12 includes a discussion of self-lubricated bearings.

(5) Chapters 14 through 17 are devoted to lubricant specification and selection, and requirements of lubricants for equipment currently in use at USACE civil works facilities.

(6) Chapter 17 also specifically addresses operation and maintenance considerations.

c. Environmentally Acceptable Lubricants. Environmentally Acceptable Lubricants are becoming more predominant in industry and within USACE. Chapter 13 provides guidance on the design and selection of environmentally acceptable lubricants.

d. Relationship to Other Manuals. This manual supersedes all previous versions of EM 1110-2-1424. It should be used in conjunction with EM 1110-2-2610, *Mechanical and Electrical Design of Navigation Locks and Dams* (30 June 2013), EM 1110-2-4205, *HydroElectric Power Plants: Mechanical Design* (30 June 1995) and all other referenced engineering manuals for the design of hydropower systems, gates, and operating machinery. Appendix A lists other applicable manuals.

1-5. Mandatory Requirements and Deviation from Design Criteria. This manual provides guidance for the protection of U.S. Army Corps of Engineers (USACE) structures and equipment. In certain cases, guidance requirements, because of their criticality to project safety and performance, are considered to be mandatory as discussed in Engineer Regulation (ER) 1110-2-1150. *Engineering and Design for Civil Works Projects* (31 August 1999). Those cases will be identified as “mandatory,” or the word “shall” will be used in place of “should.”

1-6. Appendices. Appendices to this manual provide useful supplementary material:

a. Appendix A lists references.

b. Appendix B provides grease and oil selection criteria for machinery.

c. Appendix C includes Engineering and Construction Bulletin (ECB) 2006-11, Tainter Gate Trunnion Lubrication.

d. Appendix D provides the Bureau of Reclamation document FIST 2-4, Lubrication of Powerplant Equipment.

e. Appendix E includes the U.S. Environmental Protection Agency (USEPA) document 800-R-11-002, *Environmentally Acceptable Lubricants* (November 2011).

f. Appendix F contains Maintenance Scheduling for Mechanical Equipment Bureau of Reclamation FIST 4-1A January 2009

g. Appendix G contains ERDC/CERL TR-04-28, *Performance Problems with Group II Hydrocracked Turbine Oils in Corps of Engineers Hydropower Facilities* (December 2004)

h. Appendix H contains the Evaluation of Environmentally Acceptable Lubricants (EALs) for Dams Managed by the U.S. Army Corps of Engineers.

i. Appendix I contains the Evaluation of Environmentally Acceptable Lubricants (EALs) Non-Hydropower Uses for Dams Affected by the 2014 Riverkeeper’s Settlement

j. Appendix J contains Environmentally Acceptable Lubricant Grease for Hydropower Applications

k. Appendix K provides a glossary of lubrication terms.

THIS PAGE INTENTIONALLY LEFT BLANK

CHAPTER 2

Friction and Mechanisms of Wear

2-1. Friction and Objective of Lubrication.

a. Definition of friction. Friction is a force that resists relative motion between two surfaces in contact. In short, it is the resistance to motion. Depending on the application, friction may be desirable or undesirable. Certain applications, such as tire traction on pavement and braking, or when feet are firmly planted to move a heavy object, rely on the beneficial effects of friction for their effectiveness. In other applications, such as operation of engines or equipment with bearings and gears, friction is undesirable because it causes wear and generates heat, which can lead to premature failure of equipment. For purposes of this manual, the energy expended in overcoming friction is dispersed as heat and is considered to be wasted because useful work is not accomplished. This waste heat is a major cause of excessive wear and premature failure of equipment. Two general cases of friction occur: sliding friction and rolling friction. As a general rule, sliding friction will be greater than rolling friction.

b. Asperities. All metal surfaces have some degree of surface roughness. Regardless of how smooth a surface may appear, it has many small irregularities called “asperities.” These are high points and valleys on the metal surface. When two surfaces move past each other, it is the asperities on one surface that are in contact with the asperities on the other surface. In cases where a surface is extremely rough, the contacting points are significant, but when the surface is fairly smooth, the contacting points have a very modest effect. The real or true surface area refers to the area of the points in direct contact. This area is considerably less than the apparent geometric area. One function of a lubricant is to keep the asperities between metal surfaces apart and thus eliminate metal-to-metal contact and reduce friction.

c. Objective of Lubrication. The purpose and objective of lubrication is to reduce friction and wear of metal surfaces and machine parts that move relative to each other. Cooling and debris removal are other important benefits provided by a fluid lubricant. There are a number of ways to reduce friction and these will be discussed in this manual. This includes selecting the proper lubricant, using rolling friction versus sliding friction where possible, and selecting the proper surface finish and material selection.

d. Other Functions of Lubricants. Lubricants also control the temperature of machinery and equipment. Lubricants absorb heat generated at the surface of components and carry it away to be dispersed. Along with heat, lubricants transport particulates, dirt, and other debris away from the friction surface.

2-2. Sliding Friction.

a. Definition. To visualize sliding friction, imagine a steel block lying on a steel table. Initially a force F (action or pushing force) is applied horizontally in an attempt to move the block. If the applied force F is not high enough, the block will not move because the friction between the block and table resists movement. If the applied force is increased, eventually it will be sufficient to overcome the frictional resistance force f and the block will begin to move. At

this precise instant, the applied force F is equal to the resisting friction force f and is referred to as the “force of friction” (Figure 2-1)

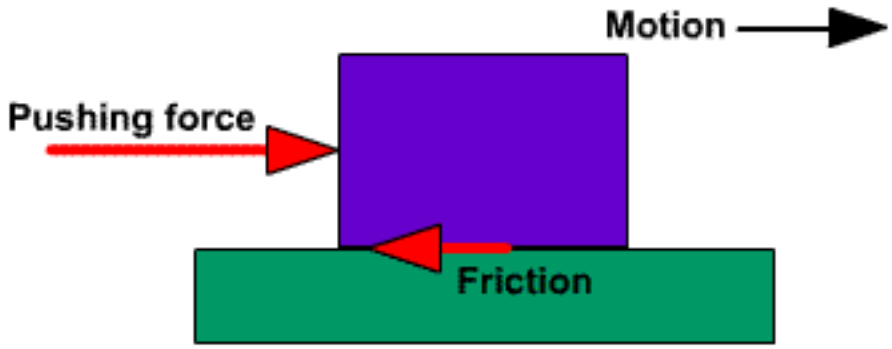

Figure 2-1. Friction Force and Motion.

b. Normal Load and Frictional Force. The discussion of friction and static and dynamic forces are provided in more detail in the *Machinery’s Handbook*, 29th ed. (Oberg et al. 2012). In mathematical terms, the relation between the normal load N (weight of the block) and the friction force f is given by the coefficient of friction denoted by the Greek symbol μ. Note that in the present context, “normal” has a different connotation than commonly used. When discussing friction problems, the normal load refers to a load that is perpendicular to the contacting surfaces. For the example used here, the normal load is equal to the weight of the block because the block is resting on a horizontal table. However, if the block were resting on an inclined plane or ramp, the normal load would not equal the weight of the block, but would depend on the angle of the ramp. The relationship between force of friction and the normal force is then:

$$f = \mu \times N \text{ and } \mu = f/N \tag{2-1}$$

where:

μ	=	coefficient of friction
f	=	frictional force
N	=	normal load.

c. Inclined Load and Frictional Force. If an object is placed on an inclined plane, the friction between the object and the plane will prevent any movement (provided the angle of inclination is not very large). At a certain angle, the object will barely be stationary. As the angle is increased beyond this, the frictional resistance will be overcome and the force of gravity will allow the block to slide down the inclined plane. The free body diagram shown in Figure 2-2 shows the angle at which this happens, which is termed the “angle of repose” and is typically denoted by the Greek letter θ; therefore $\mu = \tan \theta$.

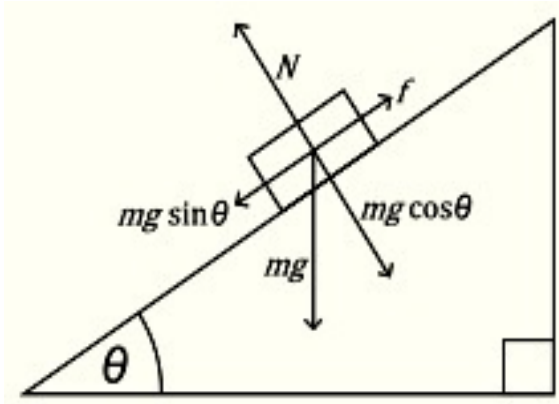

Figure 2-2. Free Body Diagram of a Block on an Inclined Plane,
Where m=mass and g=Gravitational Force.

d. Laws of Sliding Friction. The following friction laws are extracted from the *Machinery's Handbook*, 29th ed. (Oberg et al. 2012).

(1) Unlubricated surfaces. Three laws generally govern the relationship between the frictional force f and the load or weight L of the sliding object for dry surfaces (not lubricated):

(a) "For low pressures (normal force per unit area), the friction force is directly proportional to the normal load between the two surfaces. As the pressure increases, the friction does not rise proportionally; but when the pressure becomes abnormally high, the friction increases at a rapid rate until seizing takes place."

(b) "The friction both in its total amount and its coefficient is independent of the areas in contact, so long as the normal force remains the same. This is true for moderate pressures only. For high pressures, this law is modified in the same way as the first case."

(c) "At very low velocities, the friction force is independent of the velocity of rubbing. As the velocities increase, the friction decreases." This implies that the force required to set a body in motion is the same as the force required to keep it in motion, but this is not true. Once a body is in motion, the force required to maintain motion is less than the force required to initiate motion and there is some dependency on velocity. These facts reveal two categories of friction: static and dynamic. Static friction force is the force required to initiate motion (Fs). Kinetic or dynamic friction force is the force required to maintain motion (F_k).

(2) Lubricated surfaces. The friction laws for well lubricated surfaces are considerably different from those for dry surfaces, as follows:

(a) "The frictional resistance is almost independent of the pressure (normal force per unit area) if the surfaces are flooded with oil."

(b) "The friction varies directly as the speed, at low pressures; but for high pressures the friction is very great at low velocities, approaching a minimum at about 2 feet per second (0.61 meters per second) linear velocity, and afterwards increasing approximately as the square root of the speed."

(c) "For well lubricated surfaces the frictional resistance depends, to a very great extent, on the temperature, partly because of the change in viscosity of the oil and partly because, for journal bearings, the diameter of the bearing increases with the rise in temperature more rapidly than the diameter of the shaft, thus relieving the bearing of side pressure."

(d) "If the bearing surfaces are flooded with oil, the friction is almost independent of the nature of the material of the surfaces in contact. As the lubrication becomes less ample, the coefficient of friction becomes more dependent on the material of the surfaces."

2-3. Friction and Factors Affecting Friction.

a. Definition. The coefficient of friction (μ) depends on the type of material. Tables showing the coefficient of friction of various materials and combinations of materials are available. Common sources for these tables are the *Tribology Handbook* (Neale 1995), Marks Mechanical Engineering Handbook, Tribology Data Handbook, and *Machinery's Handbook*, 29th ed. (Oberg et al. 2012). The tables show the coefficient of friction for clean dry surfaces and lubricated surfaces. It is important to note that the coefficients shown in these tables can vary.

b. Factors Affecting Friction. Multiple factors affect the friction between surfaces and the coefficient of friction. This includes the viscosity of the lubricant, the surface finish, the load, the speed, and the type of motion (sliding versus rolling).

c. Adhesion. Adhesion occurs at the points of contact of surfaces and refers to the welding effect that occurs when two bodies are compressed against each other. This effect is more commonly referred to as "cold welding" and is attributed to pressure rather than heat. A shearing force is required to separate cold-welded surfaces.

d. Shear Strength and Pressure. As previously noted, the primary objective of lubrication is to reduce friction and wear of sliding surfaces. This objective is achieved by introducing a material with a low shear strength or coefficient of friction between the wearing surfaces. Although nature provides such materials in the form of oxides and other contaminants, the reduction in friction due to their presence is insufficient for machinery operation. For these conditions, a second relationship is used to define the coefficient of friction: $\mu = S/P$, where S is the shear strength of the material and P is pressure (or force) contributing to compression. This relationship shows that the coefficient of friction is a function of the force required to shear a material.

e. Stick-Slip. To the unaided eye, the motion of sliding objects appears steady. In reality, this motion is jerky or intermittent because objects slow during shear periods and accelerate following the shear. This process is continuously repeated while the objects are sliding. During shear periods, the static friction force "Fs" controls the speed. Once shearing is completed, the kinetic friction force "F_k" controls the speed and the object accelerates. This effect is known as stick-slip. In well lubricated machinery operated at the proper speed, stick-slip is insignificant, but it is responsible for the squeaking or chatter sometimes heard in machine operation. Machines that operate over long sliding surfaces, such as the ways of a lathe, are subject to stick-slip. To prevent stick-slip, lubricants are provided with additives to make the static friction force "Fs" less than the kinetic friction force "F_k."

2-4. Rolling Friction.

a. Definition. When a body rolls on a surface, the force resisting the motion is termed rolling friction or rolling resistance (Figure 2-3). Experience shows that much less force is required to roll an object than to slide or drag it. Because force is required to initiate and maintain rolling motion, there must be a definite but small amount of friction involved. Unlike the coefficient of sliding friction, the coefficient of rolling friction varies with conditions and has a dimension expressed in units of length.

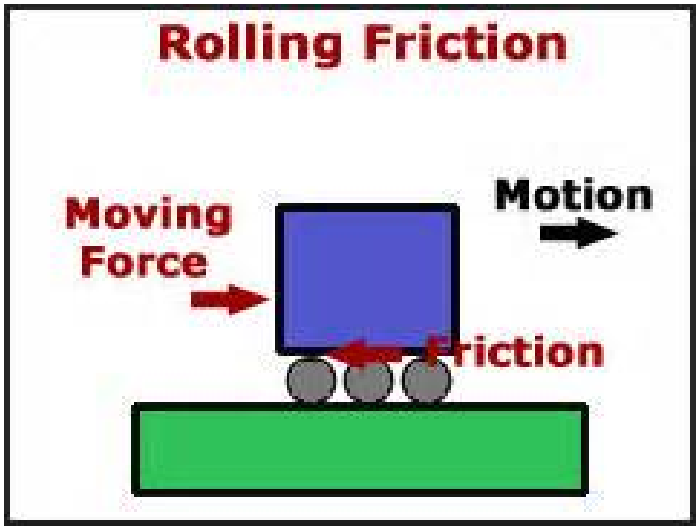

Figure 2-3. Rolling Friction.

(1) Ideally, a rolling sphere or cylinder will make contact with a flat surface at a single point or along a line (in the case of a cylinder). In reality, the area of contact is slightly larger than a point or line due to elastic deformation of either the rolling object or the flat surface, or both. Much of the friction is attributed to elastic hysteresis. A perfectly elastic object will spring back immediately after relaxation of the deformation. In reality, a small but definite amount of time is required to restore the object to original shape. As a result, energy is not entirely returned to the object or surface, but is retained and converted to heat. The source of this energy is, in part, the rolling frictional force.

(2) A certain amount of slippage (which is the equivalent of sliding friction) occurs in rolling friction. If the friction of a rolling object is measured, slippage effects are minimal. However, in practical applications such as a ball or roller bearings, slippage occurs and contributes to rolling friction. Neglecting slippage, rolling friction is very small compared to sliding friction.

b. Laws of Rolling Friction. The *Machinery's Handbook*, 29th ed. (Oberg et al. 2012) provides a more extensive discussion of rolling friction. The laws for sliding friction cannot be applied to rolling bodies in equally quantitative terms, but the following generalities can be given:

(1) The rolling friction force F is proportional to the load L and inversely proportional to the radius of curvature r, or $F = fL/r$, where f equals the coefficient of rolling resistance, in centimeters or inches. As the radius increases, the frictional force decreases.

(2) The rolling friction force F can be expressed as a fractional power of the load L times a constant k or $F = kL^n$ where the constant k and the power n must be determined experimentally.

(3) The friction force F decreases as the smoothness of the rolling element improves. This is why bearings are designed and manufactured to be as smooth as possible.

2-5. Wear.

a. Definition. Wear removes material from working surfaces. Although it is an inescapable process, it can be reduced by appropriate machinery design, precision machining, proper maintenance, and proper lubrication. Wear is defined as the progressive damage resulting in material loss due to relative contact between adjacent working parts. Although some wear is to be expected during normal operation of equipment, excessive friction causes premature wear, and this creates significant economic costs due to equipment failure, cost for replacement parts, and downtime. Friction and wear also generate heat, which represents wasted energy that is not recoverable. In other words, wear is also responsible for overall loss in system efficiency. Wear can be minimized by modifying the surface properties of solids by one or more of “surface engineering” processes (also called surface finishing) or by use of lubricants. Cleanliness of lubricants and viscosity are also critical to minimizing wear.

b. Wear and Surface Damage. The wear rate of a sliding or rolling contact is defined as the volume of material lost from the wearing surface per unit of sliding length. For any specific sliding application, the wear rate depends on the normal load, the relative sliding speed, the initial temperature, and the mechanical, thermal, and chemical properties of the materials in contact. The effects of wear are commonly detected by visual inspection of surfaces. Surface damage can take place without exchange of material or with exchange of material (either loss or gain of material).

c. For the case of surface damage without exchange of material, no material is lost or gained. This includes structural changes such as aging, tempering, phase transformations, and re-crystallization. This also includes plastic deformation such as residual deformation of the surface layer. Finally, it also includes surface cracking, or fractures caused by excessive contact strains or cyclic variations of thermally or mechanically induced strains.

d. Surface Damage with Loss of Material (Wear). This is characterized by wear scars of various shapes and sizes. This can be shear fracture, extrusion, chip formation, tearing, brittle fracture, fatigue fracture, chemical dissolution, and diffusion.

e. Surface damage with gain of material. This can include pickup of loose particles and transfer of material from the opposing surface. It also includes corrosion or material degradation by chemical reactions with ambient elements or elements from the opposing surface.

2-6. Types of Wear. Ordinarily, wear is thought of only in terms of abrasive wear occurring in connection with sliding motion and friction. However, wear also can result from adhesion, fatigue, or corrosion. Normal wear is inevitable whenever there is relative motion between surfaces. However, wear can be reduced by appropriate machinery design, precision machining, material selection, and proper maintenance, including lubrication. The remainder of this manual

is devoted to discussions on the fundamental principles of lubrication that are necessary to reduce wear.

a. Abrasive Wear. Abrasive wear occurs when a hard surface slides against and cuts grooves into a softer surface. Abrasive wear can be three-body or two-body type as noted below. Abrasive type wear is also the most common wear problem.

(1) Three-body abrasion occurs when a relatively hard contaminant (particle of dirt or wear debris) of roughly the same size as the dynamic clearances (oil film thickness) becomes embedded in one metal surface and is squeezed between the two surfaces, which are in relative motion (Figure 2-4). When the particle size is greater than the fluid film thickness, scratching, ploughing, or gouging can occur.

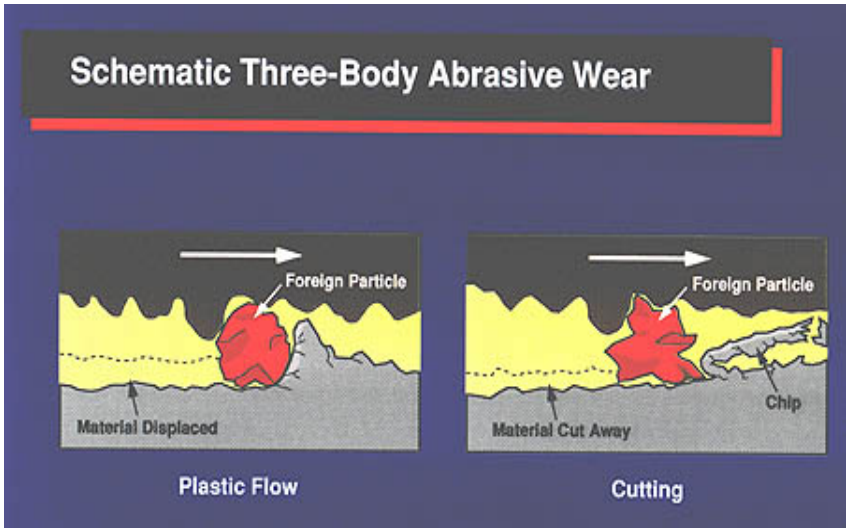

Copyright STLE – Used with permission.

Figure 2-4. Three-Body Abrasive Wear.

(2) Two-body abrasion occurs when metal asperities (surface roughness, peaks) on one surface cut directly into a second metal surface (Figure 2-5). In this case, a contaminant particle is not directly involved. The contact occurs in the boundary lubrication regime due to inadequate lubrication or excessive surface roughness.

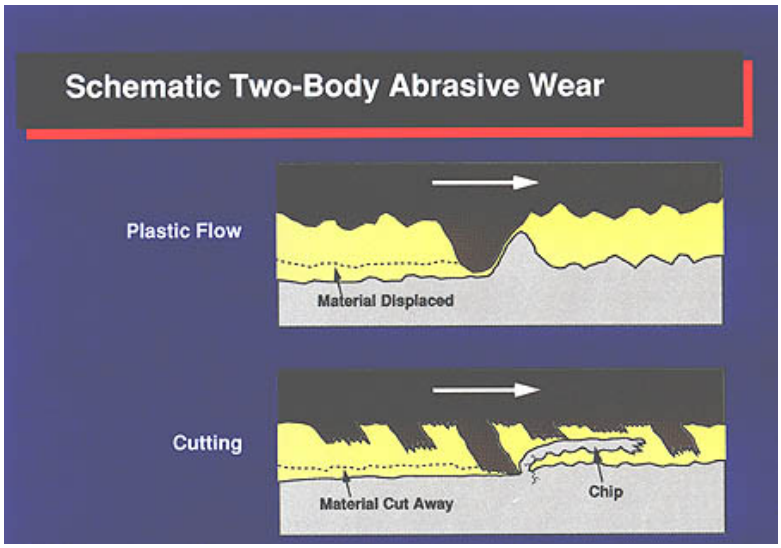

Copyright STLE – Used with permission.

Figure 2-5. Two-Body Abrasive Wear.

(3) Erosion can also be considered a form of abrasive wear. It occurs principally in high velocity, fluid streams where solid particle debris, entrained in the fluid (oil), impinges on a surface and erodes it away. Hydraulic systems are an example where this type of wear may occur.

b. Adhesive Wear. Adhesive wear can be mild or severe. Adhesive wear is the transfer of material from one contacting surface to another (Figure 2-6). It occurs when high loads, temperatures, or pressures cause the asperities on two contacting metal surfaces, in relative motion, to spot-weld together then immediately tear apart, shearing the metal in small, discrete areas. Adhesion occurs in equipment operating in the mixed and boundary lubrication regimes due to insufficient lubricant supply, inadequate viscosity, incorrect internal clearances, incorrect installation, or misalignment. This can occur in rings and cylinders, bearings, and gears.

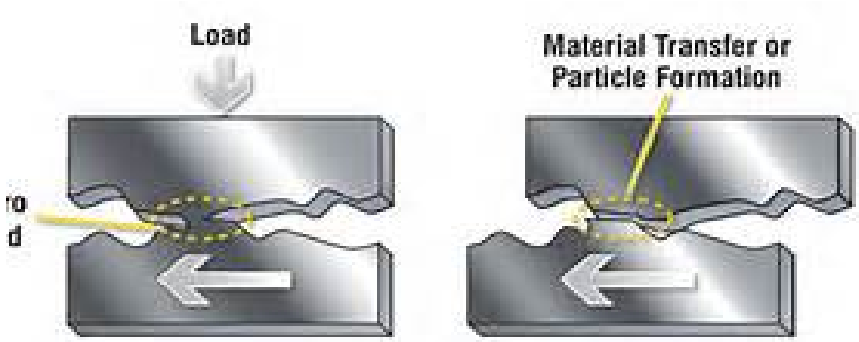

Courtesy of Noria Corporation and *Machine Lubrication* Magazine.

Figure 2-6. Diagram of Adhesion Wear.

(1) Mild adhesion generally involves removal of surface film material due to adhesion and subsequent loosening during relative motion. Mild adhesion involves transfer and loosening of surface films only. It is normal and common and generally not preventable. Generally all machine parts are susceptible.

(2) Severe adhesion involves cold welding of metal surfaces due to intimate metal-to-metal contact. This is sometimes referred to as “galling.” Several factors can contribute to severe adhesion including high loads, speeds, and/or temperatures. Other factors include insufficient lubricant, lack of antiscuff additives, no break-in, and surface roughness.

c. Fatigue Wear. Fatigue wear is due to surface failure of a material as a result of stresses that exceed the endurance (fatigue) limit of the material. Two primary types are surface and subsurface. Metal fatigue is demonstrated by bending a piece of metal wire, such as a paper clip, back and forth until it breaks. Whenever a metal shape is deformed repeatedly, it eventually fails. A different type of deformation occurs when a ball bearing under a load rolls along its race. The bearing is flattened somewhat and the edges of contact are extended outward. This repeated flexing eventually results in microscopic flakes being removed from the bearing. Fatigue wear also occurs during sliding motion. While fatigue is generally viewed as a mode of failure, this is not always detrimental. During the break-in period of new machinery, friction wears down working surface irregularities. Parts that are continuously subjected to repeated stress will experience destructive pitting as the material’s endurance limit is reached.

(1) Subsurface fatigue is a form of wear that occurs after many cycles of high-stress flexing of the metal. This causes cracks in the subsurface of the metal, which then propagate to the surface, resulting in a piece of surface metal being removed. Subsurface fatigue failure is the result of a bearing living out its normal life span based on the load, speed, and lubricant film thickness that it is exposed to.

(2) Surface fatigue begins with reduced lubrication regime and a loss of the normal lubricant film. The oil film is reduced to boundary or a mixed regime. Some metal-to-metal contact and sliding motion occurs. Surface damage occurs. The high points of the metal surface asperities are removed, which initially appear as a matted or frosted surface. This is not smearing, as in adhesion. This type of surface damage is usually visible with a magnification of three to five times.

d. Corrosive Wear. Corrosive wear occurs as a result of a chemical reaction on a wearing surface. The most common form of corrosion is due to a reaction between the metal and oxygen (oxidation); however, other chemicals may also contribute. Corrosion products, usually oxides, have shear strengths different from those of the wearing surface metals from which they were formed. The oxides tend to flake away, resulting in the pitting of wearing surfaces. Ball and roller bearings depend on extremely smooth surfaces to reduce frictional effects. Corrosive pitting is especially detrimental to these bearings. Corrosion of metals can be defined as the destructive attack of a metal through interaction with its environment. Corrosion is a process that occurs when a material deteriorates due to its interaction with the surrounding environment in which an electrochemical reaction consumes the material through oxidation. The corrosion of metals is an electrochemical process. That is, it is an electrical circuit where the exchange of electrons (electricity) is conducted by chemical reactions in part of the circuit. These chemical reactions occur at the surface of the metal exposed to the electrolyte. Oxidation reactions (corrosion) occur at the surface of the anode and reduction reactions occur at the surface of the cathode. Corrosion is often caused by the contamination or degradation of lubricants in service. Most lubricants contain corrosion inhibitors that protect against this type of attack. When the lubricant additives become depleted due to extended service or excessive contamination by moisture, combustion, or other gases or process fluids, the corrosion inhibitors are no longer

capable of protecting against the acidic (or caustic) corrosive fluid and corrosion-induced pitting can occur. The pits will appear on the metal surface that was exposed to the corrosive environment. Additives can also be depleted by filtering at incorrect temperatures or in conditions where additives have stopped being suspended. Factors that can contribute to corrosion include a corrosive environment, corrodible metals, and high temperatures.

e. Galvanic Corrosion. Galvanic corrosion is an electrochemical process in which one metal corrodes preferentially to another when both metals are in electrical contact and immersed in an electrolyte. The same galvanic reaction is exploited in primary batteries to generate a voltage. When a galvanic couple forms, one of the metals in the couple becomes the anode and corrodes more quickly than it would alone, while the other becomes the cathode and corrodes more slowly than it would alone. For galvanic corrosion to occur, three conditions must be present:

- Electrochemically dissimilar metals must be present.
- These metals must be in electrical contact.
- The metals must be exposed to an electrolyte.

f. Cavitation. This is a special form of erosion in which vapor bubbles in the fluid form in low pressure regions and are then collapsed (imploded) in the higher pressure regions of the oil system. The implosion can be powerful enough to create holes or pits, even in hardened metal if the implosion occurs at the metal surface. This type of wear is most common in hydraulic pumps, especially those that have restricted suction inlets or that are operating at high elevations. Cavitation occurs in liquid when bubbles form and implode in pump systems or around propellers. Pumps put liquid under pressure, but if the pressure of the substance drops or its temperature increases, it begins to vaporize, just like boiling water. Bubbles in the liquid cannot escape so they implode, causing physical damage to parts of the pump or propeller.

CHAPTER 3

Principles of Lubrication

3-1. Lubrication and Lubricants.

a. Purpose of Lubrication. The study of lubrication and mechanism wear is called tribology. The primary purpose of lubrication is to reduce wear and heat buildup between contacting surfaces in relative motion. While wear and heat cannot be completely eliminated, they can be reduced to negligible or acceptable levels. Because heat and wear are associated with friction, both effects can be minimized by reducing the coefficient of friction between the contacting surfaces. Lubrication is also used to reduce oxidation and prevent rust, to provide insulation in transformer applications, to transmit mechanical power in hydraulic fluid power applications, and to seal against dust, dirt, and water. This chapter discusses four types of lubrication regimes. Two of the preferred and most common types of fluid related lubricant films are hydrodynamic (sometimes called full film lubrication) and elastohydrodynamic. Hydrodynamic films are present between sliding contacts. The most common examples would be a journal bearing and thrust bearings at hydropower plants. Elastohydrodynamic lubrication relates to rolling contact. Other lubrication regimes include boundary lubrication and mixed lubrication.

b. Lubricants. Reduced wear and heat are achieved by inserting a lower viscosity (shear strength) material between wearing surfaces that have a relatively high coefficient of friction. In effect, the wearing surfaces are replaced by a material with a more desirable coefficient of friction. Any material used to reduce friction in this way is a lubricant. Lubricants are available in liquid, solid, and gaseous forms. Industrial machinery ordinarily uses oil or grease lubricants. Solid lubricants such as molybdenum disulfide or graphite are used when the loading at contact points is heavy. In some applications, the wearing surfaces of a material are plated with a different metal to reduce friction.

c. Lubrication Regimes. An understanding of lubrication regimes is fundamental to tribology. It is critical and important to understand what lubrication regime equipment and machinery are operating in. The fluid viscosity, the load that is carried by the two surfaces, and the speed that the two surfaces move relative to each other combine to determine the thickness of the fluid film. This, in turn, determines the lubrication regime. How these factors all affect the friction losses and how they correspond to the different regimes is shown on a Hersey-Stribeck curve discussed in the next section. The Society of Tribologists and Lubrication Engineers (STLE) web site also provides extensive discussion of lubrication regimes. In addition to fluid film lubrication, there is solid film lubrication, in which a thin solid film separates two surfaces. The basic regimes of fluid film lubrication are:

- Hydrodynamic lubrication, in which two surfaces are separated by a fluid film.
- Elastohydrodynamic lubrication, in which two surfaces are separated by a very thin fluid film; this regime is related to rolling contact such as roller bearings.
- Mixed lubrication, in which two surfaces are partly separated and partly in contact.

- Boundary lubrication, in which two surfaces mostly are in contact with each other even though a fluid is present.

3-2. Hersey-Stribeck Curve.

a. Definition. Engineers often use the Hersey-Stribeck curve (Figure 3-1) to evaluate lubricants, to design bearings, and to understand lubrication regimes. Depending on the type of intervening film and its thickness, a number of lubrication regimes can be identified. Stribeck performed comprehensive experiments on journal bearings around 1900. He measured the coefficient of friction as a function of load, speed, and temperature. Some years later, Hersey performed similar experiments and devised a plotting format based on a dimensionless parameter.

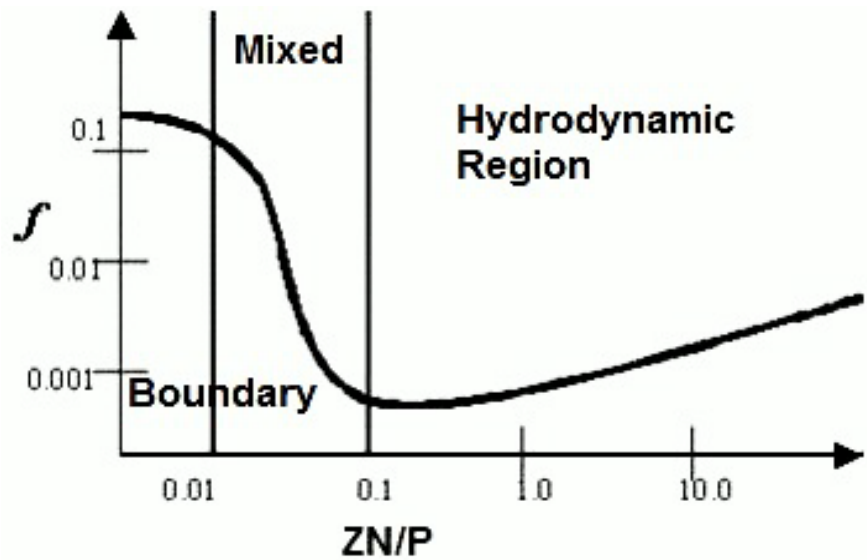

Copyright STLE – Used with permission.

Figure 3-1. Hersey-Stribeck Curve.

b. The Hersey-Stribeck Curve is a plot of the friction as it relates to viscosity, speed, and load. On the vertical axis is the friction coefficient. The horizontal axis shows a dimensionless parameter that combines the other variables: ZN/P. In this formula, Z is the fluid viscosity (Z is often used when viscosity is expressed in centipoise), N is the relative speed of the surfaces, and P is the load on the interface per unit bearing width. Boundary lubrication is shown on the left side of the curve. Hydrodynamic lubrication is shown on the right side of curve. As you move to the right on the horizontal axis, the effects of increased speed, increased viscosity, or reduced load are seen. The zero point on the horizontal axis corresponds to static friction.

c. The combination of low speed, low viscosity, and high load will produce boundary lubrication. Boundary lubrication is characterized by little fluid in the interface and large surface contact. Boundary lubrication results in very high friction.

d. As the speed and viscosity increase, or the load decreases, the surfaces will begin to separate, and a fluid film begins to form. The film is still very thin, but acts to support more and

more of the load. Mixed lubrication is the result, and is seen as a sharp drop in friction coefficient. The drop in friction is a result of decreasing surface contact and more fluid lubrication. The surfaces will continue to separate as the speed or viscosity increase until there is a full fluid film and no surface contact. The friction coefficient will reach its minimum and there is a transition to hydrodynamic lubrication. At this point, the load on the interface is entirely supported by the fluid film. There is low friction and no wear in hydrodynamic lubrication since there is a full fluid film and no solid-solid contact.

e. The curve shows the friction increasing in the hydrodynamic region. This is due to fluid drag (friction produced by the fluid). A higher speed may result in thicker fluid film, but it also increases the fluid drag on the moving surfaces. Likewise, a higher viscosity will increase the fluid film thickness, but it will also increase the drag.

f. Machinery will see boundary lubrication at startup and shutdown (low speeds and thin film), before transition to hydrodynamic lubrication at normal operating conditions (high speeds and thick film). The Stribeck curve shows that a machine will see the most friction and wear during startup and shutdown.

3-3. Hydrodynamic Lubrication.

a. General. In hydrodynamic lubrication, sometimes referred to as fluid film lubrication, the wearing surfaces are completely separated by a film of oil. The film pressure is created by the moving surface itself pulling the lubricant into a wedge-shaped zone at a sufficiently high velocity. This type of lubricating action is similar to a speedboat operating on water. When the boat is not moving, it rests on the supporting water surface. As the boat begins to move, it meets a certain amount of resistance or opposing force due to viscosity of the water. This causes the leading edge of the boat to lift slightly and allows a small amount of water to come between it and supporting water surface. As the boat’s velocity increases, the wedge-shaped water film increases in thickness until a constant velocity is attained. When the velocity is constant, water entering under the leading edge equals the amount passing outward from the trailing edge. For the boat to remain above the supporting surface, there must be an upward pressure that equals the load.

b. Definition. When a fluid lubricant is present between two rolling and/or sliding surfaces, a thicker pressurized film can be generated by the movement of the surfaces (velocities). The non-compressible nature of this film separates the surfaces resulting in no metal-to-metal contact. The condition in which surfaces are completely separated by a continuous film of lubricating fluid is commonly referred to as hydrodynamic lubrication. In this regime, the lubricant immediately adjacent to each surface travels at the same speed and direction of each surface. As you travel through the width of the film, differential speed graduates and direction is reversed. The thickness of the oil film increases as relative velocity increases between surfaces. Hydrodynamic lubrication does not depend on the introduction of the lubricant under pressure, but it does require an adequate supply of lubricant at all times. The lubricant film thickness must be larger than roughness of the two moving surfaces and any dirt, debris, or wear particles at operating temperatures, speeds, and loads.

c. In Figure 3-2, each surface has tiny asperities or peaks that will contact each other if they are placed together. If one of the surfaces were to slide over the other, then friction would

increase, the asperities would break, and the surfaces would wear. In hydrodynamic lubrication, a fluid film separates the surfaces, prevents wear, and reduces friction. The hydrodynamic film is formed when the geometry, surface motion, and fluid viscosity combine to increase the fluid pressure enough to support the load. The increased pressure forces the surfaces apart and prevents surface contact. Therefore, in hydrodynamic lubrication, one surface floats over the other surface. The increase in fluid pressure that forces the surfaces apart is hydrodynamic lift.

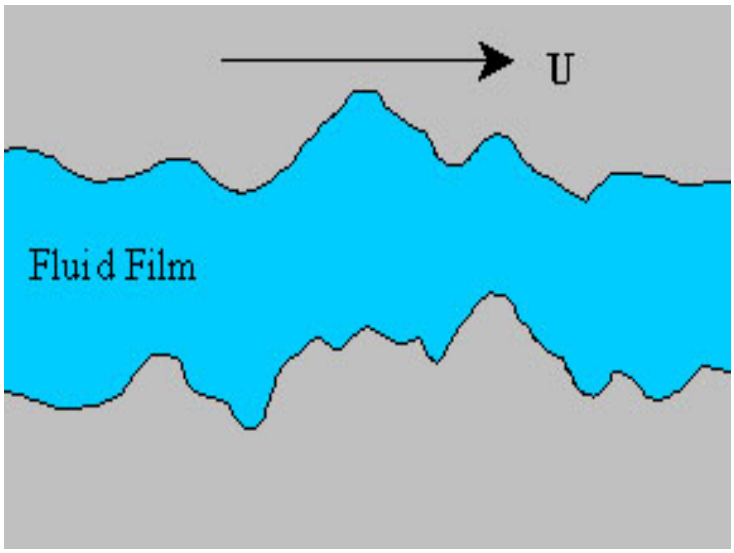

Copyright STLE – Used with permission.

Figure 3-2. Hydrodynamic Lubrication and Fluid Film Thickness.

d. Hydrodynamic lubrication reduces friction between moving surfaces by substituting fluid friction for mechanical friction. To visualize the shearing effect taking place in the fluid film, imagine the film is composed of many layers similar to a deck of cards and assume h = fluid film thickness (Figure 3-3). Then assume that the fluid layer in contact with the moving surface clings to that surface and that they both move at the same velocity. Similarly, assume that the fluid layer in contact with the other surface is stationary. The layers in between then move at velocities directly proportional to their distance from the moving surface. For example, at a distance of ½ h from Surface 1, the velocity would be ½ V. The force F required to move Surface 1 across Surface 2 is simply the force required to overcome the friction between the layers of fluid. This internal friction, or resistance to flow, is defined as the viscosity of the fluid and is one of the most important properties. Viscosity will be discussed in more detail in Chapter 4.

e. Hydrostatic versus Hydrodynamic Lubrication. In heavily loaded bearings such as thrust bearings and horizontal journal bearings, the fluid's viscosity alone is sometimes not sufficient to maintain a film between the moving surfaces. In these bearings, higher fluid pressures are required to support the load until the fluid film is established. If this pressure is supplied by an outside source, it is called hydrostatic lubrication. Hydrostatic lubrication is obtained by introducing the lubricant into the load-bearing area under a high enough pressure to separate the two surfaces. Alternatively, as discussed above, if the pressure is generated internally, that is, within the bearing by dynamic action, it is referred to as hydrodynamic lubrication. In hydrodynamic lubrication, a fluid wedge is formed by the relative surface motion of the journals or the thrust runners over their respective bearing surfaces. The guide bearings of a vertical

hydroelectric generator, if properly aligned, have little or no loading and will tend to operate in the center of the bearing because of the viscosity of the oil.

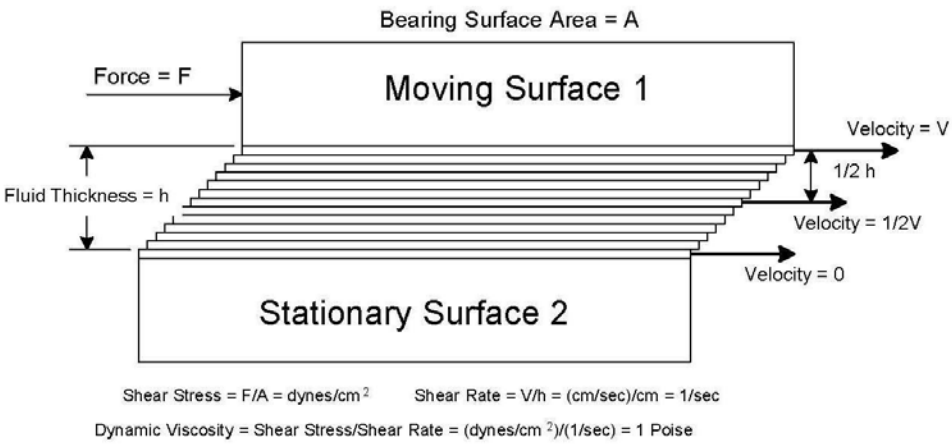

Source: Bureau of Reclamation FIST 2-4.

Figure 3-3. Fluid Film Lubrication.

f. Factors Influencing Film Formation. Although hydrodynamic lubrication is the ideal situation, in many instances it cannot be maintained. Factors that affect hydrodynamic lubrication include lubricant viscosity, rotation speed (Revolutions per Minute [RPM]), oil supply pressure, and component loading. An increase in speed or viscosity increases oil film thickness. An increase in load decreases oil film thickness. The following factors are essential to achieve and maintain the fluid film required for hydrodynamic lubrication:

(1) The contact surfaces must meet at a slight angle to allow formation of the lubricant wedge.

(2) The fluid viscosity must be high enough to support the load and maintain adequate film thickness to separate the contacting surfaces at operating speeds.

(3) The fluid must adhere to the contact surfaces for conveyance into the pressure area to support the load.

(4) The fluid must distribute itself completely within the bearing clearance area.

(5) The operating speed must be sufficient to allow formation and maintenance of the fluid film.

(6) The contact surfaces of bearings and journals must be smooth and free of sharp surfaces that will disrupt the fluid film.

g. Theoretically, hydrodynamic lubrication reduces wear to zero. In reality, the journal tends to move vertically and horizontally due to load changes or other disturbances and some wear does occur. However, hydrodynamic lubrication reduces sliding friction and wear to acceptable levels.

3-4. Thrust Bearings and Journal Bearings.

a. Thrust Bearings. The principle of hydrodynamic lubrication can also be applied to a more practical example related to thrust bearings used in the hydropower industry (Figure 3-4). These types of bearings are used throughout the hydropower industry. A thrust bearing assembly is also known as tilting pad bearings (Figure 3-5). These bearings support the axial load of the generator and are designed to allow the pads to lift and tilt properly and provide sufficient area to lift the load of the generator. As the thrust runner moves over the thrust shoe, fluid adhering to the runner is drawn between the runner and the shoe causing the shoe to pivot, and forming a wedge of oil. As the speed of the runner increases, the pressure of the oil wedge increases and the runner is lifted as full fluid film lubrication takes place. In applications where the loads are very high, some thrust bearings have high pressure pumps to provide the initial oil film. Once the unit reaches 100% speed, the pump is switched off. Some applications will have the pumps turn back on during shutdown.

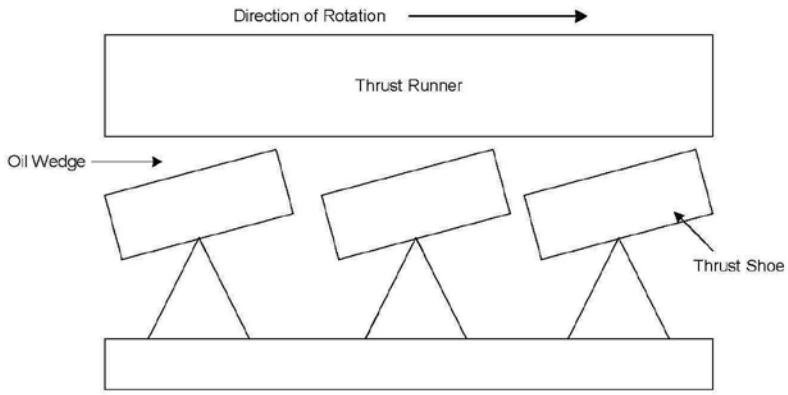

Source: Bureau of Reclamation FIST 2-4.

Figure 3-4. Pivoting Shoe Thrust Bearing.

Figure 3-5. Hydropower Tilting Pad Bearings.

b. Journal Bearings. The operation of journal or sleeve bearings is also an example of hydrodynamic lubrication. Before motion begins, the journal rests on the bearing centered on the vertical diameter (Figure 3-6). When the journal rotates, oil adhering to the journal causes a buildup of pressure. As the velocity of rotation increases, this pressure lifts the journal to provide a curved wedge-shaped film that prevents contact between the journal and its bearing. Eventually, velocity becomes constant and the journal rides on a film of oil sufficient to prevent contact with the bearing surface. The journal is not only lifted vertically, but is also pushed to the side by the pressure of the oil wedge. The minimum fluid film thickness at full speed will occur at a point just to the left of center and not at the bottom of the bearing. In both the pivoting shoe thrust bearing and the horizontal journal bearing, the minimum thickness of the fluid film increases with an increase in fluid viscosity and surface speed and decreases with an increase in load. Simplified equations have been developed to provide approximations of film thickness with a considerable degree of precision. Regardless of how film thickness is calculated, it is a function of viscosity, velocity, and load. As viscosity or velocity increases, the film thickness increases. When these two variables decrease, the film thickness also decreases. Film thickness varies inversely with the load. If the load is increased, film thickness decreases. Viscosity, velocity, and operating temperature are also interrelated. If the oil viscosity is increased the operating temperature will increase, and this in turn has a tendency to reduce viscosity. Thus, an increase in viscosity tends to neutralize itself somewhat. Velocity increases also cause temperature increases that subsequently result in viscosity reduction.

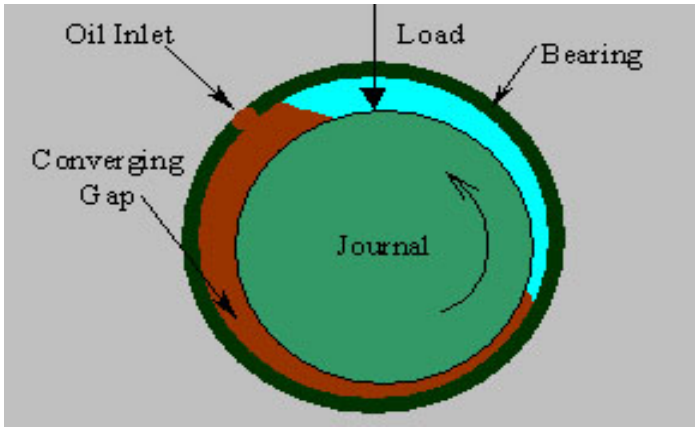

Copyright STLE – Used with permission.

Figure 3-6. Journal Bearing.

3-5. Boundary Lubrication.

a. Definition of Boundary Lubrication. When a complete fluid film does not develop between two moving surfaces, the film thickness may be reduced to permit contact between wear surface high points or asperities (Figure 3-7). The lambda ratio is discussed below. Boundary conditions occur when λ is less than 1. Boundary lubrication is generally associated with metal-to-metal contact between two sliding surfaces. This condition is characteristic of boundary lubrication and generally friction will be at its greatest in this regime. Boundary lubrication occurs whenever any of the essential factors that influence formation of a full fluid film are missing. One example would be using a lubricant with too low of viscosity. The most common example of boundary lubrication includes bearings, which normally operate with fluid film

lubrication, but which experience boundary lubricating conditions during routine starting and stopping of equipment. Other examples include gear tooth contacts and reciprocating equipment. Boundary lubrication occurs when the lubricating film is about same thickness as the surface roughness such that the high points (asperities) on the solid surfaces contact. This is generally an undesirable operating regime for a hydrostatic or hydrodynamic bearing, since it leads to increased friction, energy loss, wear, and material damage. But, most machines will see boundary lubrication during their operating lives, especially during startup, shutdown, and low speed operation. Special lubricants and additives have been developed to decrease the negative effects of boundary lubrication. These are discussed further in Chapter 5. This includes using antiwear and extreme pressure additives.

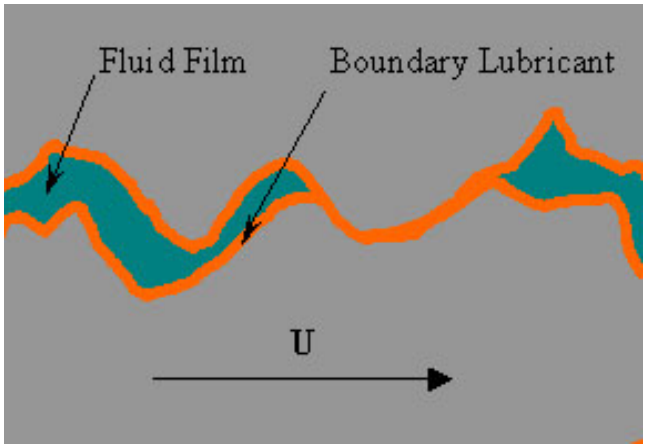

Copyright STLE – Used with permission.

Figure 3-7. Example of Boundary Lubrication between Two Moving Surfaces — Asperities in Contact between Two Surfaces.

b. Lubricity. Lubricants required to operate under boundary lubrication conditions must possess an added quality referred to as “lubricity” to lower the coefficient of friction of the oil between the rubbing surfaces. Lubricity is the measure of the reduction in friction of a lubricant. It is an oil enhancement property provided through the use of chemical additives known as antiwear (AW) agents. AW agents have a polarizing property that enables them to behave in a manner similar to a magnet. Like a magnet, the opposite sides of the oil film have different polarities. When an AW oil adheres to the metal wear surfaces, the sides of the oil film not in contact with the metal surface have identical polarities and tend to repel each other and form a plane of slippage. Boundary lubricants generally have long, straight, polar molecules, which will readily attach themselves to the metal surfaces. Most oils intended for use in heavier machine applications contain AW agents. Examples of equipment that rely exclusively on boundary lubrication include reciprocating equipment such as engine and compressor pistons, and slow-moving equipment such as turbine wicket gates. Gear teeth also rely on boundary lubrication to a great extent.

3-6. Elastohydrodynamic (EHD) Lubrication.

a. Definition of EHD Lubrication. The lubrication principles that are applied to rolling bodies, such as ball or roller bearings, are known as elastohydrodynamic (EHD) lubrication. Elastohydrodynamic lubrication occurs as pressure or load increases to a level where the

viscosity of the lubricant provides a higher shear strength than the metal surface it supports. This regime can occur in roller bearings or gears as the lubricant is carried into the convergent zone approaching a contact area or the intersection of two asperities. As a result, the metal surfaces deform elastically in preference to the highly pressurized lubricant, which increases the contact area and thus increasing the effectiveness of the lubricant. EHD films are present in rolling contacts, such as ball bearings or roller bearings. In this situation, the softer material makes up the rolling element, which actually deforms for a split second to enlarge the contact area between mating surfaces. The oil film thickness under these conditions is very small on the order of 1 micron. Because of the small oil film thickness, bearings are very susceptible to particle and water contamination.

b. Rolling Body Lubrication. Although lubrication of rolling objects operates on a principle considerably different from that for sliding objects, the principles of hydrodynamic lubrication can be applied, within limits, to explain lubrication of rolling elements. Rolling elements typically require much less lubrication than sliding contacts. An oil wedge, similar to that which occurs in hydrodynamic lubrication, exists at the lower leading edge of the bearing (Figure 3-8). Adhesion of oil to the sliding element and the supporting surface increases pressure and creates a film between the two bodies. Because the area of contact is extremely small in a roller and ball bearing, the force per unit area, or load pressure, is extremely high. This is referred to as the Herztian contact or Hertzian stress. Roller bearing load pressures may reach 5000 psi (344.75 bar) and ball bearing load pressures may reach 1,000,000 psi (68,950 bar). Under these pressures, it would appear that the oil would be entirely squeezed from between the wearing surfaces. These extreme pressures greatly affect the viscosity of the lubricant. Viscosity increases that occur under extremely high pressure prevent the oil from being entirely squeezed out. Consequently, a thin film of oil is maintained.

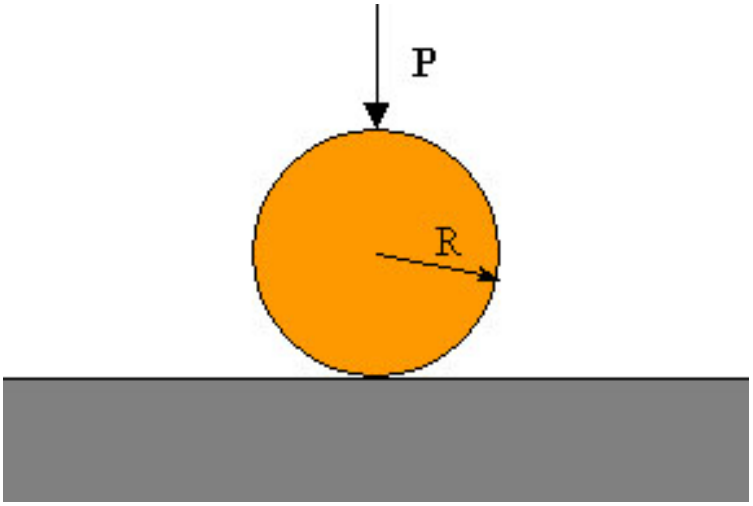

Copyright STLE – Used with permission.

Figure 3-8. Rolling Body Diagram.

c. Film Thickness Ratio and Effect of Film Thickness and Roughness. The roughness of the wearing surfaces is an important consideration in EHD lubrication. Rough surfaces usually wear more quickly and have higher coefficients of friction than do smooth surfaces. The *Machinery's Handbook*, 29th ed. (Oberg et al. 2012) is also a good resource for this topic.

Roughness is defined as the arithmetic average of the distance between the high and low points of a surface, and is referred to as Ra or roughness profile. This value is also sometimes called the centerline average (CLA). The root mean squared value Rq is also used to denote surface finish. As film thickness increases in relation to roughness, fewer asperities make contact. Engineers use the ratio of film thickness to surface roughness to estimate the life expectancy of a bearing system. This is also referred to as lambda (λ). The lambda ratio can also be used for sliding contacts in addition to rolling contact. The relation of bearing life to this ratio is very complex and not always predictable. In general, life expectancy is extended as the ratio increases. Full film thickness is considered to exist when the value of this ratio is between 2 and 4. Bearings should always be designed for λ greater than 2. Bearing life can be double or tripled as the lambda ratio reaches a value of 4 or more. It is also another reason that bearing surfaces should be designed to be as smooth as possible and kept as clean as possible. When lambda values are greater than 2, fatigue failure is generally due entirely to subsurface stress. However, in most industrial applications, a ratio between 1 and 2 is achieved. The values of λ between 1 and 2 are generally attributed to mixed lubrication discussed below. At these values surface stresses occur and asperities undergo stress and contribute to fatigue as a major source of failure in antifriction bearings. Boundary lubrication occurs when λ is less than 1.

3-7. Mixed Lubrication.

a. Definition. Hydrodynamic lubrication and EHD lubrication can degenerate into a condition called “mixed lubrication.” Here the oil film is so thin that some asperities come into contact permitting some metal transfer and wear. Mixed regime can result in excessive wear of contacting surfaces. As noted above, mixed lubrication occurs at values of λ between one and two. Mixed film lubrication occurs as a machine is started up and bearings and shafting gradually come up to speed. Selecting too low of a viscosity of a lubricant can also result in mixed lubrication.

b. Film Thickness. Mixed lubrication occurs between boundary and hydrodynamic lubrication, as the name would suggest. The fluid film thickness is slightly greater than the surface roughness so that there is very little asperity (high point) contact, but the surfaces are still close enough together to affect each other. In a mixed lubrication system, the surface asperities themselves can form miniature non-conformal contacts. Mixed lubrication often occurs in gear sets as the lubrication regime transfers from boundary conditions to hydrodynamic conditions. The gear meshes roll across each other at the pitchline, which falls into the EHD lubrication regime. The gear sets slide across each other above and below the pitchline, which results in both boundary and hydrodynamic lubrication. For bearings, mixed lubrication conditions can result from the following conditions:

- Viscosity that is too low.
- Bearing speed that is too low.
- Bearing that is overloaded.
- Bearing clearances that are too tight.
- Journal and bearing that are not properly aligned.

CHAPTER 4

Lubricating Oil Basics and Production

4-1. Types of Oil.

a. A lubricant is a balanced mix of a number of components. The composition of this mix that a production plant or manufacturer must follow is called the "formulation." The formulation of a lubricant is made up of base oils and additives that combine to determine behavior when in use, both in terms of performance and duration.

b. Petroleum is a mixture of chemical compounds formed from the remains of ancient animals and plants. It is trapped in porous rock formations and is usually associated with concentrated saltwater. Petroleum generally belongs to the chemical class called hydrocarbons, which are chains of carbon atoms compounded with hydrogen. The number of carbons may range from 1 (in methane gas) to well above 50. Hydrocarbons are further broken into three classes: paraffins, naphthenes, and aromatics.

c. Lubricating oils are produced by a blending process between a base oil and additives. All lubricants start with a base oil. The characteristics of the finished (blended) lubricant is determined by the type of base oil used and additives. Oils are generally classified as refined, synthetic, or biobased. Paraffinic and naphthenic oils are refined from crude oil while synthetic oils are manufactured. Biobased lubricants are also referred to as vegetable or crop-based lubricants and are discussed further in Chapter 13. Mineral oil comes from crude oil and its quality depends on the refining process. There is a grading scale for oil and different applications require different oil quality. Mineral oil is mainly made up of four different types of molecules including paraffinic, branched paraffinic, naphthenic, and aromatic. Paraffinic oils have a long, straight chained structure, while branched paraffinic oils are the same with a branch off the side. These are used mainly in engine oils, industrial lubricants, and processing oils. Naphthenic oils have a saturated ring structure and are most common in moderate temperature applications. Aromatic oils have a non-saturated ring structure and are used for manufacturing seal compounds and adhesives. Synthetic oils are man-made fluids that have identical straight chained structures, much like the branched paraffinic oils. One of the benefits of a synthetic is that the molecular size and weight are constant while mineral oils vary greatly; therefore the properties are very predictable. The distinguishing characteristics between these oils are noted below.

d. Paraffinic molecules tend to form waxy, crystal-like particles at low temperatures and elevate the pour point, the temperature at which an oil ceases to flow. However, paraffinics have a better viscosity index. Naphthenics behave in an opposite manner; they do not form waxy particles as easily and have a lower pour point, but their viscosity index is poor. Viscosity index is defined in this chapter in Paragraph 4-2.b.

e. Paraffinic Oils. Paraffinic oils are distinguished by a molecular structure composed of long chains of hydrocarbons, i.e., the hydrogen and carbon atoms are linked in a long linear series similar to a chain. Paraffinic oils contain paraffin wax and are the most widely used base stock for lubricating oils. They will have a higher resistance to oxidation. In comparison with

naphthenic oils, paraffinic oils have a higher pour point, higher viscosity index, low volatility, high flash points, and low specific gravities.

f. Naphthenic Oils. In contrast to paraffinic oils, naphthenic oils are distinguished by a molecular structure composed of "rings" of hydrocarbons, i.e., the hydrogen and carbon atoms are linked in a circular pattern. These oils do not contain wax and behave differently than paraffinic oils. Naphthenic oils are generally reserved for applications with narrow temperature ranges and where a low pour point is required. Naphthenic oils have:

- Lower pour point due to absence of wax.
- Lower viscosity indexes.
- Higher volatility (lower flash point).
- Higher specific gravities.

4-2. Properties and Characteristics of Lubricating Oils.

a. Viscosity. Viscosity is the most important property of a lubricant. Technically, the viscosity of an oil is a measure of the oil's resistance to shear. Viscosity is more commonly known as resistance to flow. If a lubricating oil is considered as a series of fluid layers superimposed on each other, the viscosity of the oil is a measure of the resistance to flow between the individual layers. A high viscosity implies a high resistance to flow while a low viscosity indicates a low resistance to flow. Viscosity varies inversely with temperature. Viscosity is also affected by pressure; higher pressure causes the viscosity to increase, and subsequently the load-carrying capacity of the oil also increases. This property enables use of thin oils to lubricate heavy machinery. The load-carrying capacity also increases as operating speed of the lubricated machinery is increased. Two common methods for measuring viscosity are shear and time.

(1) Shear. When viscosity is determined by directly measuring shear stress and shear rate, it is expressed in centipoise (cP) and is referred to as the absolute or dynamic viscosity. Dynamic viscosity can also be considered an oil's internal resistance to flow and shear. It is the measure of how the fluid behaves under pressure, such as a pressurized hydraulic line.

(2) In the oil industry, it is more common to use kinematic viscosity, which is the absolute viscosity divided by the density of the oil being tested. Kinematic viscosity is expressed in centistokes (cSt) and can also be thought of as an oil's resistance to flow and shear by the forces of gravity. Water has a low viscosity of 1 cSt (1 mm^2/s). The kinematic viscosity is related to the time required for a fixed volume of lubricant to flow through a capillary tube at a given test temperature, usually 40 °C (100 °C), under the influence of gravity. Viscosity in centistokes is conventionally given at two standard temperatures: 104 and 212 °F (40 and 100 °C). The viscosity at 104 °F (40 °C) is also an indicator of the International Standards Organization (ISO) grade. For example, an oil with a viscosity of approximately 32 cSt (32 mm^2/s) at 104 °F (40 °C) is an ISO Grade 32 oil. Various organizations have developed grading systems for lubricant viscosity. The ISO Standard 3448 defines various viscosity grades (see Table 4-1). This classification defines 20 viscosity grades in the range of 2 to 320,000 cSt (2 to 320,000 mm^2/s) at 104 °F (40 °C). The Society of Automotive Engineers (SAE) defines viscosity grades for automobile oils. The American Gear Manufacturers' Association (AGMA) also defines viscosity grades. Table 4-1 provides a cross reference.

Table 4-1. ISO Viscosity Grades.

ISO Viscosity Grade	Midpoint Kinematic Viscosity mm²/s at 40°C (104°F)	Kinematic Viscosity Limit mm²/s at 40°C (104°F) Minimum	Kinematic Viscosity Limit mm²/s at 40°C (104°F) Maximum
ISO VG 2	2.2	1.98	2.42
ISO VG 3	3.2	2.88	3.52
ISO VG 5	4.6	4.14	5.06
ISO VG 7	6.8	6.12	7.46
ISO VG 10	10	9.00	11.0
ISO VG 15	15	13.5	16.5
ISO VG 22	22	19.8	24.2
ISO VG 32	32	29.8	35.2
ISO VG 46	46	41.4	50.6
ISO VG 68	68	61.2	74.8
ISO VG 100	100	90.0	110
ISO VG 150	150	135	165
ISO VG 220	220	198	242
ISO VG 320	320	288	352
ISO VG 460	460	414	506
ISO VG 680	680	612	748
ISO VG 1000	1000	900	1100
ISO VG 1500	1500	1350	1650
ISO VG 2200	2200	1980	2420
ISO VG 3200	3200	2880	3520

Courtesy of Noria Corporation and *Machine Lubrication* Magazine.

(3) Time. Another method used to determine oil kinematic viscosity measures the time required for an oil sample to flow through a standard orifice at a standard temperature. Viscosity is then expressed in SUS (Saybolt Universal Seconds). SUS viscosities are also conventionally given at two standard temperatures: 100 and 210 °F (37 and 98 °C). As previously noted, the units of viscosity can be expressed as centipoise (cP), centistokes (cST), or Saybolt Universal Seconds (SUS), depending on the actual test method used to measure the viscosity. Figure 4-1 shows a chart of the viscosities of various types of oils, for comparison.

b. Viscosity Index. The viscosity index, commonly designated VI, is an arbitrary numbering scale that indicates the changes in oil viscosity with changes in temperature. The higher the VI, the less the viscosity will change as a result of a temperature change. VI is an arbitrary number and is calculated from results of the kinematic viscosity at 104 °F (40 °C) and 212 °F (100 °C). VI properties can be enhanced with addition of additives. Viscosity index can be classified as follows: low VI usually < 35; medium VI usually 35 to 80; high VI usually 80 to 110; very high VI usually > 110. A high viscosity index indicates small oil viscosity changes with temperature. A low viscosity index indicates high viscosity changes with temperature. Therefore, a fluid that has a high viscosity index can be expected to undergo very little change in viscosity with temperature extremes and is considered to have a stable viscosity.

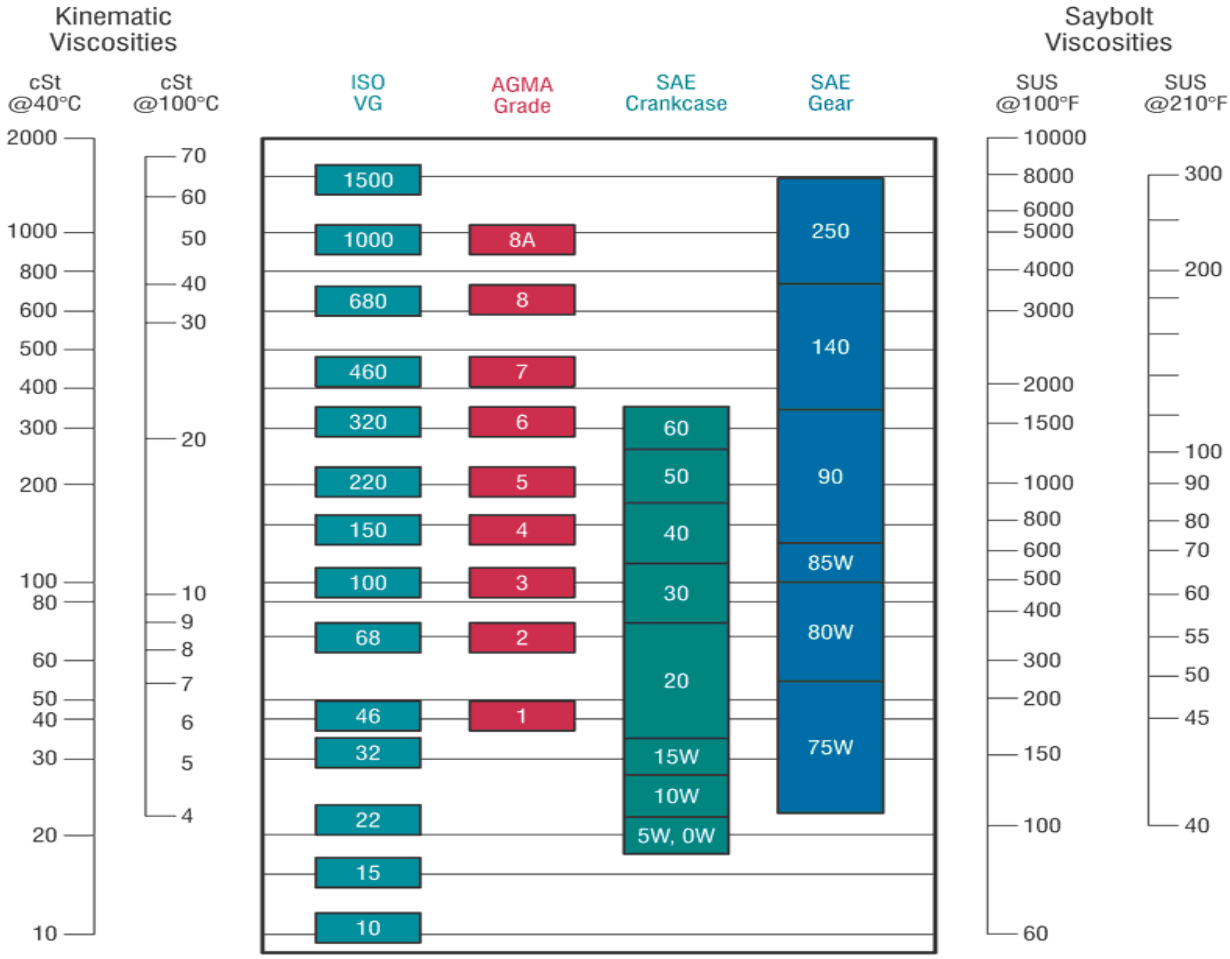

Courtesy of Noria Corporation and *Machine Lubrication* Magazine.

Figure 4-1. Viscosity Comparison Chart.

A fluid with a low viscosity index can be expected to undergo a significant change in viscosity as the temperature fluctuates. For a given temperature range, say 0 to 100 °F (–18 to 37 °C), the viscosity of one oil may change considerably more than another. An oil with a VI of 95 to 100 would change less than one with a VI of 80. Knowing the viscosity index of an oil is crucial when selecting a lubricant for an application, and is especially critical in extremely hot or cold climates. Failure to use an oil with the proper viscosity index under great temperature extremes may result in poor lubrication and equipment failure. Typically, paraffinic oils are rated at 100 °F (38 °C) and naphthenic oils are rated at 0 °F (–18 °C). Proper selection of petroleum stocks and additives can produce oils with a very good VI.

c. Pour Point. The pour point is the lowest temperature at which an oil will flow. This property is crucial for oils that must flow at low temperatures and in cold weather applications. In paraffinic oils, the pour point is the result of the crystallization of waxy particles. In naphthenic oils, the pour point is the result of the increase in viscosity caused by a decrease in temperature. A commonly used rule of thumb when selecting oils is to ensure that the pour point is at least 50 °F (10 °C) lower than the lowest anticipated ambient temperature.

d. Cloud Point. The cloud point is the temperature at which dissolved solids in the oil, such as paraffin wax, begin to form and separate from the oil. As the temperature drops, wax crystallizes and becomes visible. Certain oils must be maintained at temperatures above the cloud point to prevent clogging of filters.

e. Flash Point and Fire Point. The flash point is the lowest temperature to which a lubricant must be heated before its vapor, when mixed with air, will ignite but not continue to burn. The fire point is the temperature at which lubricant combustion will be sustained. The flash and fire points are useful in determining a lubricant's volatility and fire resistance. The flash point can be used to determine the transportation and storage temperature requirements for lubricants. The flash point is not necessarily the safe upper temperature limit. Instead, it is a relative indication of the fire and explosion hazard of a particular oil. The flash point can also be used as an indication of the evaporation losses that can be expected under high temperature applications. Lubricant producers can also use the flash point to detect potential product contamination. A lubricant exhibiting a flash point significantly lower than normal will be suspected of contamination with a volatile product. Products with a flash point less than 100 °F (37.7 °C) will usually require special precautions for safe handling. The fire point for a lubricant is usually 8 to 10% above the flash point. The flash point and fire point should not be confused with the auto-ignition temperature of a lubricant, which is the temperature at which a lubricant will ignite spontaneously without an external ignition source.

f. Acid Number or Neutralization Number. The acid or neutralization number is a measure of the amount of potassium hydroxide required to neutralize the acid contained in a lubricant. It can be considered the measure of the acidity of an oil and is the amount, in milligrams, of potassium hydroxide (KOH) required to neutralize 1 gram of oil. A relative increase in the neutralization number indicates oxidation of the oil. Acids are formed as oils oxidize with age and service. The acid number for an oil sample is indicative of the age of the oil and can be used to determine when the oil must be changed.

g. Oxidation stability is a chemical reaction that occurs with a combination of the lubricating oil and oxygen. The rate of oxidation is accelerated by high temperatures, water, acids, and catalysts such as copper. The rate of oxidation increases with time. The service life of a lubricant is also reduced with increases in temperature. Oxidation will lead to an increase in the oil's viscosity and deposits of varnish and sludge. The rate of oxidation depends on the quality and type of base oil as well as the additive package used. Some synthetics, such as polyalphaolefins (PAOs), have inherently better oxidation stability than do mineral oils. This improved oxidation stability accounts for the slightly higher operating temperatures that these synthetic oils can accommodate. Generally, oxidation will reduce the service life of a lubricant by half, for every 18 °F (10 °C) increase in fluid temperature above 140 °F (60 °C). Severely hydrotreated base oils also have poor solubility characteristics. Without proper formulation, additives may not remain suspended, and some additive drop out could occur. Oxidation products including varnish and sludge remain in suspension or deposit on surfaces rather than being dissolved in the fluid. Several methods may be used to determine or evaluate the oxidation stability of an oil, which is usually regarded as the number of hours until a given increase in viscosity is noted or until there is a given increase in the acid number (AN).

4-3. Synthetic Oils. Synthetic oils are making up a larger portion of the lubrication market. The use of synthetic oils is increasing due to their popularity with many lubricant end users and marketing by manufacturers. Synthetic lubricants will typically be double or more the cost of petroleum-based lubricants. Synthetic base oils include many different types of compounds; some are limited to a single specific application. PAOs and Polyalkylene Glycols (PAGs) are two products produced in the synthetic base oil market and the most common. Tables 4-2 and 4-3 summarize the most common synthetic lubricants. Detailed performance data and specification data are not provided in this manual for synthetic lubricants. The detailed performance data can be obtained from lubricant manufacturers and from handbooks such as the *Tribology Handbook* (Neale 1995). Synthetic oils are a man-made fluid with scientifically designed molecules with a specific identified structure. As such, fluid properties are very predictable. Synthetic lubricants have greater hydrolytic stability, i.e., the ability to resist chemical decomposition (hydrolysis) in the presence of water.

a. Synthetic lubricants are produced from chemical synthesis rather than from the refinement of existing petroleum or biobased (vegetable) oils. These oils are generally superior to petroleum (mineral) lubricants in most circumstances and usually can extend the life of the lubricant. The primary drawback is the higher cost. Synthetic oils perform better than mineral oils in that they have:

- Better oxidation stability or resistance.
- Better viscosity index.
- Much lower pour point, as low as –50 °F (–46 °C).
- Lower coefficient of friction.
- Better high temperature stability and protection against breakdown.
- Better low temperature viscosity.
- Lower operating temperatures.

b. The advantages offered by synthetic oils are most notable at either very low or very high temperatures. Good oxidation stability and a lower coefficient of friction permits operation at higher temperatures. The better viscosity index and lower pour points permit operation at lower temperatures. There are two API (American Petroleum Institute) base oil categories that include synthetics. API Group Types are discussed further later in this chapter. The first is API Group IV. The only synthetic base oil included in this group is PAO. The second category is API Group V. These are non-PAO synthetic bases and include diesters, polyolesters, alkylated benzenes, phosphate esters, etc. Some API Group III oils are also marketed as synthetics especially in the automotive industry. These are highly processed crude oils that are very close in property to Type IV oils.

c. The major disadvantage to synthetic oils is their initial cost, which is approximately two times (or more) higher than the cost of mineral-based oils. However, the initial higher cost is usually recovered over the life of the product, which can be about three times longer than conventional lubricants. The higher cost makes it inadvisable to use synthetics in oil systems experiencing leakage.

Table 4-2. Summary of Synthetic Lubricants for Industrial and Automotive Applications.

Type	**Properties**
Synthesized Hydrocarbons	API Group IV - PAOs Polybutenes
Organic Esters	API Goup V Dibasic acid esters (Diesters) Polyol esters
Severely Hydroprocessed	API Group III (some manufacturers classify these as synthetic — API Group Types are discussed later in this chapter)
Others	API Group V PAGs Phosphate esters Silicones

Table 4-3. Synthetic Lubricant Summary.

SYNTHETIC FLUID	STRENGTHS	WEAKNESSES	APPLICATIONS
POLYALPHAOLEFINS	High VI, high thermal oxidative stability, low volatility, good flow properties at low temperatures, nontoxic	Limited biodegradability, limited additive solubility, seal shrinkage risk	Engine oils, gear oils, bearing oils, compressor oils, high-temperature grease, lube-for-life applications
DIESTERS AND POLYOLESTERS	Nontoxic, biodegradable, high VI, good low-temperature properties, miscible with mineral oils	Low viscosities only, bad hydrolytic stability, limited seal and paint compatibility	Compressor oils, high-temperature grease, co-base stock with PAOs, bearing oils, gear oils, oil mist, jet engine oils
PHOSPHATE ESTERS	Fire resistant, biodegrades quickly, excellent wear resistance, scuffing protection	Low VI, limited seal compatibility, not miscible with mineral oils, moderate hydrolytic stability	Fire-resistant hydraulic fluids used in power plants, factories, marine vessels, mining, aircraft, mobile equipment
POLYALKYLENE GLYCOLS	Excellent lubricity, nontoxic, good thermal and oxidative stability, high VI	Additives marginally miscible, not miscible with mineral oils, limited seal and paint compatibility	Refrigeration compressors, brake fluids (water soluble), fire-resistant fluids (water soluble), gas compressors (low gas solubility), worm and high-temperature gears, chain lube (clean burn off), metal-working and quenchants, H1 food grade
SILICONES	Highest VI, high chemical stability, excellent seal compatibility, very good thermal and oxidative stability	Worst mixed and boundary film lubrication properties, not miscible with mineral oils or additives	High-temperature fluids, specialty greases, lubricant-contacting chemicals, some brake fluids

Courtesy of Noria Corporation and *Machine Lubrication* Magazine.

d. Factors to be considered when selecting synthetic oils include pour and flash points; demulsibility; lubricity; rust and corrosion protection; thermal and oxidation stability; antiwear properties; compatibility with seals, paints, and other oils; and compliance with testing and standard requirements. It is important to note that synthetic oils are as different from each other as they are from mineral oils. Their performance and applicability to any specific situation depends on the quality of the synthetic base oil and additive package. Synthetic oils are not necessarily interchangeable with each other.

e. Synthetic Lubricant Categories. Table 4-3 identifies several synthetic oils and their properties. This can be broken down into five general categories. These categories are listed in Table 4-3 and discussed in the remainder of this paragraph. As noted, PAO synthetics are the most common type.

(1) Synthesized hydrocarbons. PAOs and dialkylated benzenes are the most common types. Of these, PAOs are probably the most common synthetic lubricant and one of the oldest type of synthetic lubricants. As noted, PAO lubricants are classified as API Type IV lubricants. These lubricants provide performance characteristics closest to mineral oils and are compatible with them. PAO lubricants are a synthetic hydrocarbon (made from ethylene gas), but do not contain any wax, sulfur, or nitrogen compounds. This results in a lubricant with a very high viscosity index and a non-polar base oil. Applications include engine and turbine oils, hydraulic fluids, gear, and bearing oils, and compressor oils. Disadvantages include their:

- Limited ability to dissolve some additives.
- Tendency to shrink rubber-based seals and hoses. (Special seal and hose material is needed with these fluids.)
- Requirement for addition of antioxidant additives to resist oxidation.
- Limited properties on boundary lubrication.
- Poor fire resistance.
- Poor biodegradability.

(2) Organic esters. Diabasic acid and polyol esters are the most common types. There are saturated esters and unsaturated esters. Saturated esters are the most applicable to hydraulic systems on USACE navigation structures. The properties of these oils are easily enhanced through additives. Applications include crankcase oils and compressor lubricants.

(3) Diesters: Produced by reaction of an oxygen containing acid with an alcohol. Applications includeType-1 Jet engine oils, compressor oils, and high temperature greases.

(a) Properties include their:

- Composion, which contains no sulfur, phosphorus, waxes, or metals.
- Excellent low temp fluidity (Pour Point in range from -58 to -85 °F (-50 to -65 °C).
- High Viscosity Index (above 140).
- Good lubricating properties (high shear resistance).

- Good thermal & oxidation resistance.
- Lower volatility than mineral oils.
- High solvency (tend to dissolve varnish and sludge deposits).

(b) Some disadvantages include their:

- Poor hydrolytic stability.
- Tendency to shrink rubber-based seals and hoses. Special seal and hose material is needed with these fluids.
- Requirement for addition of antioxidant additives to resist oxidation.
- Limited properties on boundary lubrication.

(4) Polyol esters. Reaction of an acid with an alcohol containing two or more alcohol groups (OH) in its structure. Applications include second generation jet engine oils (Type 11), compressor lubricants, blends for automotive engine oils, and base oil for high temperature range greases.

(a) Some properties include their:

- Composition, which contain no sulfur, phosphorus, waxes, or metals.
- Excellent low temp fluidity. (Pour Point in range from -58 to -94 °F (-50 to -70 °C).
- High Viscosity Index (above 120-160).
- Good lubricating properties (high shear resistance).
- Excellent thermal and oxidation resistance (better than Diesters).
- Lower volatility than mineral oils.
- Better hydrolytic stability than Diesters.
- (Some varieties) biodegradability (i.e., Trimethylolpropane [TMP]).
- Perfume odor.

(b) Some disadvantages include their:

- Tendency to swell seals. (Seal material selection needs to take this into account.)
- Requirement for special additives. (Does not work with additives developed for mineral oils.)
- Tendency to affect paints and finishes.
- Compatibility only with Polyol Esters.

(5) Phosphate esters. Produced by reaction between alcohols and phosphoric acid. These lubricants are suited for fire resistance applications. Applications include: fire resistant industrial hydraulic fluids and hydraulic fluids for aviation systems. They can also be used as wear and friction reducing additive in grease.

(a) Some properties include their:

- Excellent fire resistance.
- Pour Point, which is in the range from -13 to -58 °F (-25 to -50 °C).
- High Viscosity Index (above 120-160).
- Excellent boundary lubrication properties.
- Good thermal stability.
- Fair hydrolytic stability.
- Specific gravity >1. (Water contamination floats on top.)

(b) Some disadvantages of phosphate esters include their:

- Very low VI (ranging from 60 to -30).
- Limited capabilities at higher temperatures.
- Decomposition byproducts are corrosive.
- Poor compatibility with mineral oils.
- Degradation products, which include phosphate soaps that have a black, sludge-like consistency.

(6) Polyalkylene Glycols (PAGs). The terms “polyalkylene glycol” and “polyglycol” are often use interchangeably. These can be water soluble and water insoluble. They have very different properties from each other. PAG can also be used as an environmentally acceptable lubricant. See Chapter 13. Applications include gears, bearings, and compressors for hydrocarbon gases.

(a) Other applications include:

- Fire resistant hydraulic fluids (solubles).
- Hydraulic brake fluids (solubles).
- Metal working fluids (solubles).
- Heat transfer fluids (insolubles).
- Base fluid for high temp. hydraulic fluids and bearing oils (insolubles).
- Screw-type refrigeration compressors and hydrocarbon gases.
- Screw-type compressors handling hydrocarbon gases.

(b) Some properties of PAG lubricants include their:

- Tendency to volatilize rather than form deposits or sludge at high temperatures.
- Wide thermal range and high thermal conductivity.
- High Viscosity Index (150).

- Low solubility with hydrocarbon gases and some refrigerants.
- Good biodegradability and aquatic toxicity.
- Ability to hold large amounts of water (hydraulic fluid) in solution.

(c) Some disadvantages of PAG lubricants include their:

- Poor performance at low temperatures when compared with other synthetics.
- Incompatibility with mineral oils or their additives.
- Incompatibility with PAOs or esters.
- Considerable compatibility risk with paints and finishes.
- Considerable compatibility risk with many types of seals.
- Expense, which can be 6-8 times more costly than mineral oils.

(7) Silicones. Silicone lubricants are chemically inert, nontoxic, fire resistant, and water repellant. They also have low pour points and volatility, good low temperature fluidity, and good oxidation and thermal stability at high temperatures. They can operate over a wide temperature range. Silicones have a polymeric composition with the carbons in the backbone replaced by silicon. Silicones are one of the older types of synthetic fluids. Some applications include high temperature oils and greases, lubricants exposed to radiation and oxygen, specialty hydraulic applications requiring compressible fluids, and brake fluids (limited compressibility).

(a) Some properties include their:

- Very high Viscosity Index (300 and more).
- Chemically inert.
- Nontoxicity.
- Good low temperature fluidity.
- Fire resistant.
- Low volatility.
- Water repellent properties.
- Good thermal and oxidation stability up to high temperatures.

(b) Some disadvantages of silicone lubricants include their:

- High compressibility (low lube properties).
- Oxidation products (silicon oxides), which are abrasive.
- Low surface tension. (They do not form adherent lubricating films.)
- Poor antiwear protection.
- Poor additives response.

4-4. Other Properties of Oils. This section will provide a general discussion of lubricating oils. Turbine oils are specifically discussed in Chapter 9. Hydraulic oils are discussed in Chapter 10. Other properties of lubricating oil that are important, but for which direct measurement of their quantitative values is less significant, are described below.

a. Color. New lubricating oils, including turbine oils, are normally light in color. Oil will gradually darken in service. This is due to oxidation. This is accepted as normal, but oil oxidation should be monitored. However, a significant color change occurring in a short time indicates that something has changed. For example, if oil suddenly becomes hazy, it is probably being contaminated with water. A rapid darkening or clouding may indicate that oil is contaminated or excessively degraded.

b. Foaming Characteristics. Foaming characteristics are measured by American Society for Testing and Materials (ASTM) Test Method D892. This test will show the tendency of oil to foam and the stability of the foam after it is generated. Foaming can result in poor system performance and can cause serious mechanical damage and along with air entrainment can cause oxidation of the oil to occur at a faster rate. Most lubricants contain antifoam additive to break up the foam.

c. Water Content. Lubricating oil should be clear and bright. Most turbine oil will remain clear up to 75 ppm water at room temperature. A quick and easy qualitative analysis of insoluble water in oil is the hot plate test or crackle test. A small amount of oil is placed on a hot plate. If oil smokes, there is no insoluble water. If it spatters, the oil contains free or suspended water. This test is useful to find oils with very high water content generally with a threshold of 500 ppm and above. Moreover, a test that results in an audible spatter can indicate 2000 ppm free or suspended water.

d. Inhibitor Content. The stability of lubricating oil is based on the combination of high quality base stock with highly effective additives. Oxidation inhibitors include phenols and amines. Therefore, it is very important to monitor the oxidation of the oil. ASTM Test Method D2272, “Rotating Pressure Vessel Oxidation Test,” is very useful for approximating the oxidation inhibitor content of the turbine oil. The remaining useful life of the oil can be estimated from this test. Acid number tests are also used to monitor this. Other tests include membrane patch colorimetry. Chapter 9 discusses additional tests for turbine oils.

e. Wear and Contaminant Metals. Quantitative spectrographic analysis of used oil samples may be used to detect trace metals (and silica) and to identify metal-containing contaminants. System metals such as iron and copper can be accurately identified if the sample is representative and if the metals are solubilized or are very finely divided. A high-silica level generally indicates dirt contamination.

f. Percent of Saturates. These are very stable oil molecules. Higher saturates % means oil will resist oxidation and remain in service longer. On the other hand, oils high in saturates are correspondingly low in aromatics.

g. Sulfur Content. Sulfur contaminants can be corrosive to machinery under certain conditions since the presence of sulfur combined with water can lead to the formation of acid.

4-5. Lubricating Oil Degradation. A lubricating oil may become unsuitable for its intended purpose as a result of one or more processes. This discussion provides a general overview. Chapters 9 and 10 discuss turbine oil and hydraulic oil degradation respectively.

a. Oxidation. Oxidation occurs by chemical reaction of the oil with oxygen. The first step in the oxidation reaction is the formation of hydroperoxides. Subsequently, a chain reaction is started and other compounds such as acid, resins, varnishes, sludge, and carbonaceous deposits are formed. Oxidation is the primary limiting factor on remaining usable life for oil. The rate at which oxidation occurs is not steady. Oxidation inhibitors are consumed during the process of oxidation. Oil oxidation rates increase over time, than drastically increase as the last of the remaining oxidation inhibitors are consumed. When nearing this point, the oil is at the end of its useful life.

b. Water Contamination. Water may be dissolved or emulsified in oil. Dissolved water indicates it is below the saturation level. Water contamination can be dissolved and the fluid may look clear at lower water content, below the saturation point. At higher water content levels, above the saturation point, the water is “free” or “emulsified” and the fluid looks milky. Water affects viscosity, promotes oil degradation and equipment corrosion, and interferes with lubrication. The higher the oil temperature, the more water that can be dissolved in the oil. Water in hydraulic oil can compromise oil viscosity, can cause acid levels to increase, and can cause corrosion in system components (such as cylinders, valves, filter housings, pumps). In reservoirs, water can spoil antifoam additives, compress into vapor, can damage oil and internal components, and can compromise system performance. Results of water contamination in fluid systems include:

- Fluid breakdown, such as additive precipitation and oil oxidation.
- Reduced lubricating film thickness.
- Accelerated metal surface fatigue.
- Corrosion.
- Jamming of components due to ice crystals formed at low temperatures.
- Loss of dielectric strength in insulating oils.

(1) Effects of water on bearing life. Studies have shown that the fatigue life of a bearing is greatly reduced by even small amounts of water contained in a petroleum-based lubricant. The *Noria Practical Handbook of Machinery Lubrication* (Noria 2011) documents that an oil with 500 ppm of water reduces the life of a rolling element bearing by 60%. Other studies have shown similar results. This is discussed further in Chapter 15.

(2) Effect of water and metal particles. Oil oxidation is increased in a hydraulic or lubricating oil by the presence of water and particulate contamination. Small metal particles act as catalysts to rapidly increase the neutralization number of acid level. Water has many negative effects including increased oxidation and chemical reactions causing additive loss.

(3) Sources of water contamination. There are a number of sources of water contamination in a lubrication system. This includes heat exchanger leaks, seal leaks, condensation of humid air,

inadequate reservoir covers, or desiccant breathers, and temperature drops changing dissolved water to free water.

(4) Typical oil saturation levels

- Hydraulic: 200 to 400 ppm (0.02 to 0.04%).
- Lubricating: 200 to 750 ppm (0.02 to 0.075%).
- Transformer: 30 to 50 ppm (0.003 to 0.005%).

c. Air Contamination. Air in oil systems may cause foaming, slow and erratic system response, microdieseling, and pump cavitation. In an oil system, air can be present in four forms. This includes dissolved, free, foam, and entrained. Forms of air in oil include:

- Free air (pockets of air in the system).
- Dissolved air (up to 12% in petroleum oils).
- Entrained air (suspended in oil, bubbles typically less than 1 mm diameter).
- Foam (bubbles rise to surface, typically greater than 1 mm diameter).

d. All oils have some dissolved air in them. The two forms of air of most concern are foam and entrained air. Foam consists of air bubbles on the surface of the oil. Entrained air can rise to form foam. Some causes of foam and air entrainment include oil levels that are too high and oil viscosity that is too high. The introduction of air can accelerate oil oxidation and formation of varnishes. Formation of varnish provides seed particles further increasing the formation of bubbles. This causes a self propagating, accelerating degradation process. Foam and air entrainment can cause:

- Foaming.
- Slow system response with erratic operation.
- A reduction in system stiffness.
- Higher fluid temperatures.
- Pump damage due to cavitation.
- Inability to develop full system pressure.

e. Loss of Additives. Two of the most important additives in turbine lubricating oil are the rust and oxidation (R&O) inhibiting agents. Without these additives, oxidation of oil and the rate of rusting will increase. Water will cause antifoam additives to agglomerate and lose effectiveness and be filtered out.

f. Accumulation of Contaminants. Lubricating oil can become unsuitable for further service by accumulation of foreign materials in the oil. The source of contaminants may be from within the system or from outside. Internal sources of contamination are rust, wear, and sealing products. Outside contaminants are dirt, weld spatter, metal fragments, etc., which can enter the system through ineffective seals, dirty oil fill pipes, or dirty makeup oil.

g. Biological Deterioration. Lubricating and hydraulic oils are susceptible to biological deterioration if the proper growing conditions are present. Procedures for preventing and coping with biological contamination include cleaning and sterilizing, addition of biocides, frequent draining of moisture from the system, avoidance of dead-legs in pipes. The *Tribology Handbook* (Neale 1995) is also a good reference document for more details on biological deterioration and contamination of lubricating oils.

4-6. Oil Classifications and Grading Systems. Professional societies classify oils by viscosity ranges or grades. The most common systems are those of the SAE, AGMA, ISO, and ASTM. Other grading systems include ILSAC (International Lubricant Standardization and Approval Committee) and API. For example, the API classifies engine oils based on service grades. The API Service Symbol, also known as the "Donut," is clearly marked on oil packaging when the product meets the service grade performance requirements. Reference: http://www.api.org/certification-programs/engine-oil-diesel-exhaust-fluid/service-categories.aspx

a. The variety of grading systems used in the lubrication industry can be confusing. A specification giving the type of oil to be used might identify an oil in terms of its AGMA grade, for example, but an oil producer may give the viscosity in terms of cSt or SUS. Conversion charts between the various grading systems are readily available from lubricant suppliers. Conversion between cSt and SUS viscosities at standard temperatures can also be obtained from ASTM D2161.

b. API Base Types Oils.

(1) API base type oils with higher numbers are more refined than those with lower number (Table 4-4). The API has established guidelines to define different types of mineral and synthetic base oils. These guidelines or "Groups" define base oils by their physical and chemical properties:

- Group 1: Solvent-Refined mineral oils - Oldest and least refined base oils.
- Group 2: Undergo further refining to increase % of saturates.
- Group 3: Severely hydroprocessed. Technology improves performance characteristics to the point where they can be marketed as synthetics.
- Group 4: PAOs are chemical synthetics called "synthesized" hydrocarbons.
- Group 5: Man-made synthetics (diesters, polyol estes, phosphate esters, silicones, polyglycols).

(2) Table 4-4 lists saturates by percent. These are very stable oil molecules. Higher saturates percentage means oil will resist oxidation and remain in service longer. Sulfur content is also noted. Sulfur is a contaminant that can be corrosive to machinery under certain conditions. Hydroprocessed and hydrocracking are discussed in the paragraph below under "Oil Refining."

Table 4-4. API Group Types.

Group	Description	Saturate wt %	Sulfur wt %	Viscosity Index
I	Solvent-Refined Mineral Oil	< 90	> 0.03	80 to < 120
II	Hydroprocessed	≥ 90	≤ 0.03	≥ 80 to ≤ 120
III	Hydrocracked	≥ 90	≤ 0.03	≥ 120
IV	PAOs	100	0	≥ 130
V	All others — other synthetics			≥ 130

4-7. Oil Refining.

a. Mineral oils are obtained from distillation of crude petroleum. Due to the wide variety of petroleum constituents, it is necessary to separate petroleum into portions (fractions) with roughly the same qualities. The refining process (Figure 4-2) separates crude oil into the following basic components:

- Natural gas liquids.
- Gasoline.
- Naphtha.
- Kerosene.
- Gas oils.
- Lubricating base oils.
- Paraffin.
- Asphalt.
- Coke.

(1) Crudes are segregated and selected depending on the types of hydrocarbons in them. Starting from petroleum crude oil, the typical process for making a lubricant base oil is:

- Separation of lighter boiling materials, such as gasoline, diesel, etc.
- Distillation to give desired base oil viscosity grades.
- Selective removal of impurities, such as aromatics and polar compounds.
- Dewaxing to improve low temperature fluidity.
- Finishing to improve oxidation resistance and heat stability.

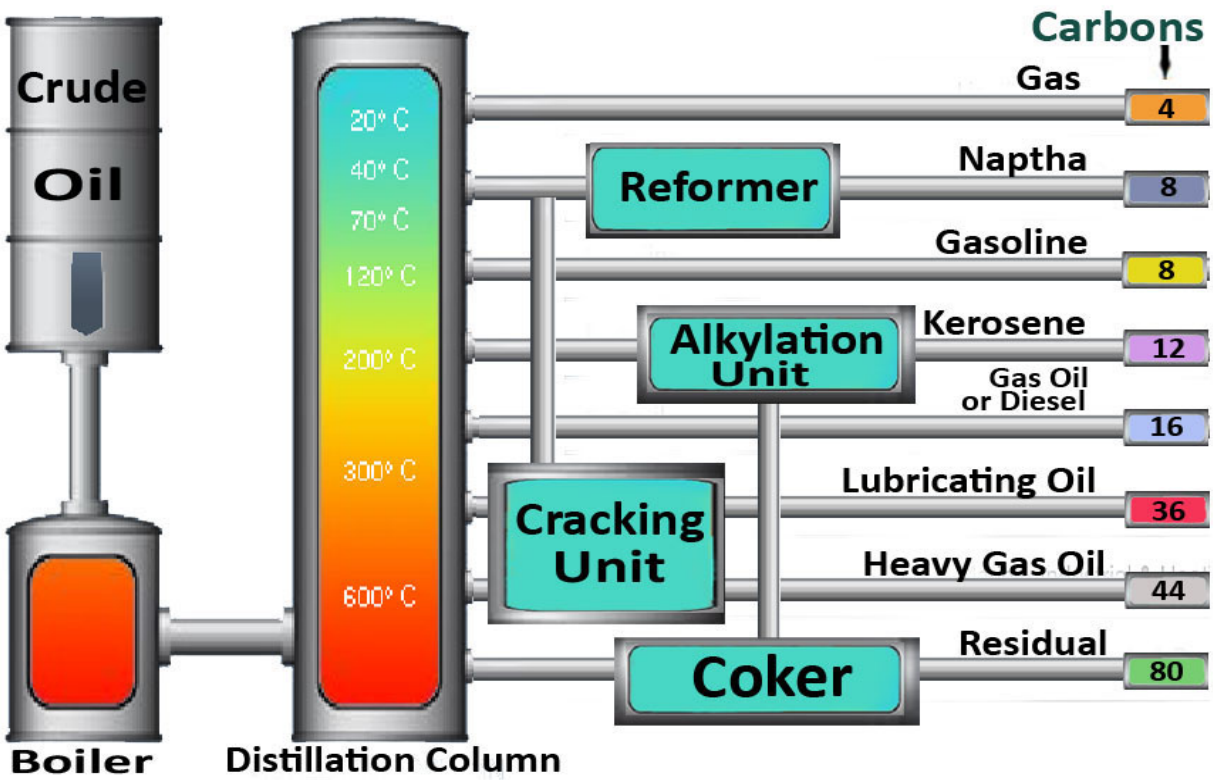

Courtesy of Noria Corporation and *Machine Lubrication* Magazine.

Figure 4-2. Typical Refining Process.

(2) The selected crudes are distilled to produce fractions. A fraction is a portion of the crude that falls into a specified boiling point range. Due to the wide variety of petroleum constituents, it is necessary to separate petroleum into fractions with roughly the same qualities. This is accomplished by distillation which is discussed further below.

(3) Each fraction is processed to remove undesirable components. The processing may include:

- Solvent refining to remove undesirable compounds.
- Solvent dewaxing to remove compounds that form crystalline materials at low temperature.
- Catalytic hydrogenation to eliminate compounds that would easily oxidize.
- Clay percolation to remove polar substances.

(4) The various fractions are blended to obtain a finished product with the specified viscosity. Additives may be introduced to improve desired characteristics. Chapter 5 of this manual discusses the various types of and uses for additives.

b. Separation into Fractions. Separation is accomplished by a two-stage process: crude distillation and residuum distillation. There are two distinct stages in distillation. The first stage produces raw gasoline, kerosene, and diesel fuel. The second stage involves distilling the portion

of the first stage that did not volatilize (the residuum). Lubricating oils are obtained from the residuum.

(1) Crude distillation. In the first stage, the crude petroleum is mixed with water to dissolve any salt. The resulting brine is separated by settling. The remaining oil is pumped through a tubular furnace where it is partially vaporized. The components that have a low number of carbon atoms vaporize and pass into a fractionating column or tower. As the vapors rise in the column, cooling causes condensation. By controlling the temperature, the volatile components may be separated into fractions that fall within particular boiling point ranges. In general, compounds with the lowest boiling points have the fewest carbon atoms and compounds with the highest boiling points have the greatest number of carbon atoms. This process reduces the number of compounds within each fraction and provides different qualities. The final products derived from this first stage distillation process are raw gasoline, kerosene, and diesel fuel.

(2) Residuum distillation. The second stage process involves distilling the portion of the first stage that did not volatilize. Lubricating oils are obtained from this portion, which is referred to as the residuum. To prevent formation of undesired products, the residuum is distilled under vacuum so it will boil at a lower temperature. Distillation of the residuum produces oils of several boiling point ranges. The higher the boiling point, the higher the carbon content of the oil molecules in a given range. More importantly, viscosity also varies with the boiling point and the number of carbon atoms in the oil molecules.

c. Impurity Removal. Once the oil is separated into fractions, it must be further treated to remove impurities, waxy resins, and asphalt. Oils that have been highly refined are usually referred to as “premium grades” to distinguish them from grades of lesser quality in the producer’s line of products. However, there are no criteria to establish what constitutes a premium grade.

d. Solvent Refining. Solvent-refined oils will typically have very poor biodegradability and a low viscosity index. Developed over 70 yrs ago, this process attempts to remove the undesirable components by solvent extraction. Initially, light oils such as gasoline, diesel, etc. are separated from crude petroleum by atmospheric distillation. The resulting material is charged to a vacuum distillation tower, where lubricant fractions of specific viscosity ranges are taken off. These fractions are then treated individually in a solvent extraction tower. A solvent furfural is mixed with them and extracts about 80% of the aromatic material present. After reducing the aromatic content, the solvent extracted lube fraction is dewaxed by chilling to a low temperature, which removes much of the wax and so improves the low temperature fluidity of the product. Finally, the dewaxed lube fractions are sometimes finished to improve their color and stability, depending on the application requirements. One common method of finishing is mild hydrofinishing. Hydrofinishing process is used to remove remaining impurities (sulfur, nitrogen) and aromatics, and to make molecule size more uniform. Solvent-refined oils will usually have high aromatic content, often 20-30% and an aniline point less than 108 °F (42 °C).

e. Hydrocracking. Advances in refining technology and an industry push for extended oil changes and long life lubricants has resulted in hydrocracked oils that have similar performance characteristics to those of PAO synthetics, but at a cost that is closer to traditional solvent-refined base stocks. Hydrocracked base oils biodegrade more quickly than solvent-refined oils and will

have a higher viscosity index. Hydrocracking is a reaction of crude oil and hydrogen at high temp (approx. 1000 °F [537.7 °C]), and pressure (approximately 1000 psi [68.95 bar]) in presence of a catalyst. Contaminants are eliminated and majority of aromatics are converted to paraffins. Some characteristics of severely hydrocracked oil are that it:

- Is 99.99 % saturated.
- Has an aromatic content much lower than Group 1. Its aniline point is greater than or equal to 108 °F (42 °C).
- Has no heavy metals content.
- Has virtually no aromatics.
- Has a low pour point.
- Has better oxidation resistance.
- Exhibits performance similar to synthetics.

THIS PAGE INTENTIONALLY LEFT BLANK

CHAPTER 5

Lubricant Additives

5-1. Introduction. An additive is a material that imparts or reinforces a desirable property of the lubricant. Additives can enhance properties of the base oil and also suppress undesirable properties of the base oil. The overall performance of oil can be improved by introducing additives. However, poor quality oil cannot be converted into a premium quality oil by introducing additives. Furthermore, there are limits to the amount of additives that can be introduced to improve performance. Virtually all lubricants contain additives to enhance existing properties or to impart new properties. Additives generally only comprise a small portion of the overall lubricant composition. This is typically from 1 to 30% of the overall composition. Figure 5-1 shows a typical lubricant composition.

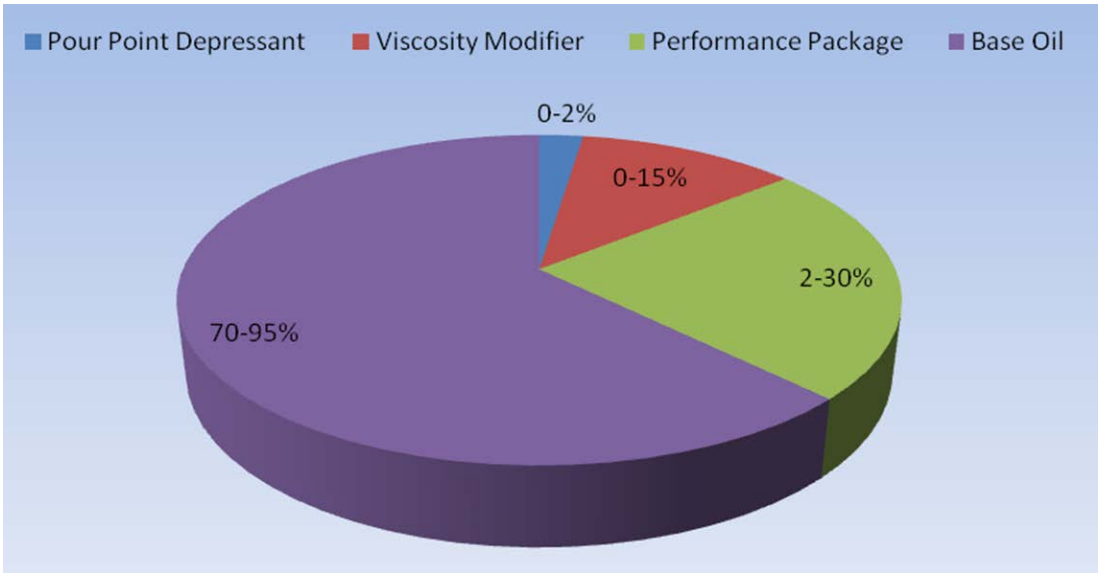

Figure 5-1. Typical Lubricant Composition.

5-2. Additive Classifications. Three general classifications of lubricant additives are surface protective additives, performance-enhancing additives, and lubricant protective additives. As the names imply, surface protective additives protect the bearing surfaces, performance-enhancing additives enhance the lubricant's performance for particular applications, and lubricant protective additives prevent deterioration of the lubricant. These categories are summarized as:

- Surface-Protecting Additives. Extreme pressure (EP) additives, Antiwear (AW) additives, and rust inhibitors are included in this category. These additives coat the lubricated surfaces and prevent wear or rust.
- Performance-Enhancing Additives. Viscosity index improvers and antifoaming agents are examples. They make the lubricant perform in a desired manner for specific applications.
- Lubricant Protective Additives. An example is antioxidants. Antioxidants reduce the tendency of oil to oxidize and form sludge and acids.

5-3. Oil Classification. Oil is normally classified by viscosity grade (probably most common), additive package, by application or use, or by the producer's brand name. Some oils are classified as nonspecialized industrial oils.

a. Classification by Viscosity Grade. Classification according to viscosity is the most prevalent method of describing oils, and the most common classification systems are those of professional societies and organizations such as SAE, AGMA, and ISO. Each organization uses a different kinematic viscosity range numbering system. Chapter 4 of this manual further discusses viscosity and the professional societies that classify lubricants. Common professional organizations related to lubricants include:

- SAE (Society of Automotive Engineers).
- API (American Petroleum Institute).
- AGMA (American Gear Manufacturers Association).
- ISO (International Standards Organization).
- NLGI (National Lubricating Grease Institute).

b. Classification by Additive Package. Oil quality is established by the refining processes and additives are most effective if the oil is well refined. Table 5-1 lists the most common additives, which are discussed individually in the following paragraphs.

Table 5-1. Types of Additives.

Additive	**What It Does**	**How It Works**
Acid neutralizers	• Neutralize contaminating strong acids formed, e.g., by combustion of high sulfur fuels or by decomposition of active EP additives	• Are alkaline substances that neutralize acids that are formed
Antifoam or foam inhibitor	• Reduce surface foam • Prevents formation of stable foam	• Promotes combination of small bubbles, which in turn collapse more easily
Antioxidants or oxidation inhibitor	• Reduce oxidation • Inhibits varnish and sludge formation • Reduces viscosity increase resulting from oxidation • Reduces formation of corrosive acids	• Slows the rate of reaction with oxygen by interruption of chain reactions or by decomposing reactive peroxides

Additive	What It Does	How It Works
Antirust	• Reduce rusting of ferrous surfaces swept by oil	• Forms a film on ferrous parts thus protecting them from water or other destructive materials
Antiwear agents	• Reduce wear and prevent scuffing caused by metal-to-metal contact during conditions of mild boundary lubrication under steady load operating conditions	• Additive reacts chemically and forms a film on metal surfaces under normal operating conditions
Corrosion inhibitors	• Prevents corrosive attack on nonferrous metallic surfaces	• Forms a film on nonferrous metallic parts thus protecting them from attack by contaminants in the oil
Detergents	• Prevents oxidation products (gums) that have formed in the oil from sticking to metal parts at high temperatures, e.g., internal combustion engine • Neutralizes acidic contaminants	• Chemically react with oxidation products (gums) so that they remain soluble in the oil and do not stick to metal surfaces • Metallic base reacts with acid
Dispersant	• Keeps oxidation products separated and suspended in the oil, retards formation of sludge, and reduces soot related viscosity increase at low temperatures	• Additive absorbs on surface of gum particles or soot and inhibits agglomeration
Demulsifiers	• Loosens and breaks stable emulsions	• Lowers emulsion stability
Emulsifiers	• Promotes rapid mixing of oil and water promoting formation of a stable emulsion	• Reduces interfacial tension and permits intimate mixing of oil and water
EP agents	• Prevents welding and subsequent wear or seizure of contacting metal parts under extreme or shock load conditions	• Additive combines chemically with surface to from a surface film • Reaction usually occurs at high temperatures that result when asperities collide
Friction modifier	• Alters coefficient of friction	• Forms an easily shearable film on metal surfaces

Additive	What It Does	How It Works
Metal Deactivator	• Reduces the catalytic effect of metals on oxidation rate.	• Forms an inactive film on metal surfaces by combining with metallic ions.
Oiliness enhancers	• Reduce friction under boundary lubrication conditions. • Increase load-carrying capacity where limited by temperature rise by formation of mainly organic surface films.	• Forms a (metal-wetting) film on metal surfaces .
Pour point depressants	• Lowers the pour point of paraffinic oils and enables the lubricant to flow at low temperature.	• Changes the size and shape of wax crystals.
Rust inhibitor	• Prevent rusting of ferrous (iron or steel) machine parts.	• Forms a film on ferrous parts thus protecting them from water or other destructive materials.
Tackiness agents	• Reduce loss of oil by gravity, e.g., from vertical sliding surfaces, or by centrifugal force.	• Adding polymers composed of long-chain molecules or aluminum soaps of long-chain fatty acids increases the tackiness or adhesiveness of oils.
Viscosity modifier (VM) or viscosity index improvers	• Reduces rate of change of viscosity with temperature and makes possible the formulation of multigrade oils.	• Polymers uncoil as temperature rises, thus increasing their effective sizes and viscosity.

5-4. Surface Protective Additives. The primary purpose of surface additives is to protect lubricated surfaces. This category includes extreme pressure additives, rust, and corrosion inhibitors, tackiness agents, antiwear additives, and oiliness additives. These additives coat the lubricated surfaces to prevent wear or rust.

a. Rust Inhibitors. Rust inhibitors are added to most industrial lubricants to minimize rusting of metal parts, especially during shipment, storage, and equipment shutdown. Rust inhibitors protect ferrous (iron or steel) parts by forming a film on the part that resists attack by water. Although oil and water do not mix very well, water will emulsify, especially if the oil contains polar compounds that may develop as the oil ages. In some instances, the water will remain either suspended by agitation or will rest beneath the oil on machine surfaces when agitation is absent. Rust inhibitors form a surface film that prevents water from making contact with metal parts. This

is accomplished by making the oil adhere better or by emulsifying the water if it is in a low concentration.

b. Corrosion Inhibitors. Corrosion inhibitors suppress oxidation and prevent formation of acids. Corrosion inhibitors act in a similar way as rust inhibitors to protect nonferrous parts and also act to neutralize acids with a basic compound such as calcium carbonate. These inhibitors form a protective film on metal surfaces and are used primarily in internal combustion engines to protect alloy bearings and other metals from corrosion.

c. EP Additives. Lubricants containing additives that protect against extreme pressure are called EP lubricants, and oils containing additives to protect against extreme pressure are classified as EP oils. EP lubrication is provided by a number of chemical compounds. The most common are compounds of boron, phosphorus, sulfur, chlorine, or combinations of these. The compounds are activated by the higher temperature resulting from extreme pressure, not by the pressure itself. As the temperature rises, EP molecules become reactive and release derivatives of phosphorus, chlorine, or sulfur (depending on which compound is used) to react with only the exposed metal surfaces to form a new compound such as iron chloride or iron sulfide. The new compound forms a solid protective coating that fills the asperities on the exposed metal. Thus, the protection is deposited at exactly the sites where it is needed. Extreme pressure additives react with the metal surfaces to form compounds that have lower shear strength than the metal. EP additives work by reacting with a metal to form a compound that acts as a protective layer on the metal's surface. This coating reduces friction, wear, scoring, seizure, and galling of wear surfaces. Because this layer is softer than the metal itself, under extreme pressure conditions, the compound layer wears away first, protecting the metal. As this layer is removed, the EP additive acts to form another layer. In contrast to the action of antiwear additives, EP additives control wear instead of preventing it. Some EP additives, because of their reactive nature, can be corrosive to brass or copper-containing alloys. To prevent excessive corrosion, most EP additives are activated by the heat of friction created during extreme pressure conditions, but do not react at room temperature. During extreme pressure conditions, the reaction is initiated by increased temperature caused by pressure between asperities on wearing surfaces. Extreme pressure additives are used in heavy loading or shock loading applications such as turbines, gears, and ball and roller bearings.

d. Tackiness Agents. In some cases, oils must adhere to surfaces extremely well. Adding polymers composed of long-chain molecules or aluminum soaps of long-chain fatty acids increases the tackiness or adhesiveness of oils. Tackiness agents act to increase the adhesiveness of an oil or grease.

e. Antiwear (AW) Agents. Antiwear additives work by coating a metal's surface. If light metal-to-metal contact is made, the heat from the friction melts the additives, forming a liquid layer between the surfaces. This molten additive layer, being softer than the metal, acts as a lubricant, preventing wear of the metal surfaces. Molecules of the antiwear compound are polar and attach (adsorb) themselves to metal surfaces or react mildly with the metal. Under boundary lubrication conditions (direct contact between metal asperities), such as in starting and stopping of machinery, these molecules resist removal more than ordinary oil molecules. This reduces friction and wear. However, they are effective only up to about 480 °F (250 °C). Unusually heavy loading will cause the oil temperature to increase beyond the effective range of the antiwear protection. When the load

limit is exceeded, the pressure becomes too great and asperities make contact with greater force. Instead of sliding, asperities along the wear surfaces experience shearing, removing the lubricant and the oxide coating. Under these conditions the coefficient of friction is greatly increased and the temperature rises to a damaging level. EP additives should be considered under these conditions.

f. Detergents and Dispersants. Detergents and dispersants are used primarily in internal combustion engines to keep metal surfaces clean by preventing deposition of oxidation products. Detergents and dispersants are used primarily in engine oils to keep surfaces free of deposits and to keep contaminants dispersed in the lubricant. They provide high temperature cleanliness and control corrosive wear by neutralizing acids.

g. Compounded Oil or Lubricity Additives. Lubricity, also referred to as oiliness, with respect to lubricating oil, is defined as the ability of an oil to reduce friction between moving surfaces. Lubricity is also the ability of an oil to provide a lower coefficient of friction at a given viscosity. Lubricity additives, usually vegetable or animal fats, enhance lubricity by tenaciously adhering to the metal's surface, forming an adsorbed film of high lubricating value. A small amount of animal fat or vegetable oil added to a mineral or residual oil will reduce the coefficient of friction in situations where an extreme amount of sliding friction occurs without affecting the viscosity. This oil contains from 3% to 10% fatty or synthetic fatty oils. When fatty oil is added to obtain this quality of oiliness, the lubricant is called a compounded oil. Fatty oil adheres to metal more strongly than mineral oil and provides a protective film. A very common application is in worm gear systems.

h. Residual Oil. Residual compounds are heavy-grade straight mineral oils or EP oils. These compounds are normally mixed with a diluent to increase ease of application. After application, the diluent evaporates, leaving a heavy adhesive lubricant coating. Residuals are often used for open gear applications where tackiness is required to increase adhesion. This type of heavy oil should not be confused with grease. Residual oil with lower viscosity is also used in many closed-gear systems. Compounded oil may contain residual oil if the desired viscosity is high.

5-5. Performance-Enhancing Additives. These additives improve the performance of lubricants. Viscosity index improvers, antifoaming agents, emulsifiers, demulsifiers, and pour point depressants are examples.

a. Pour Point Depressants. An oil's pour point is the temperature at which the oil ceases to flow under the influence of gravity. In cold weather, oil with a high pour point makes machinery startup difficult or impossible. The stiffness of cold oil is due to paraffin waxes that tend to form crystal structures. Pour point depressants reduce the size and cohesiveness of the crystal structures, resulting in reduced pour point and increased flow at reduced temperatures. Pour point depressants reduce viscosity and improve low temperature pumping ability.

b. Viscosity Modifier (VM) or Viscosity Index (VI) Improvers. The viscosity index is an indicator of the change in viscosity as the temperature is changed. The higher the VI, the less the viscosity of an oil changes for a given temperature change. Viscosity index improvers are used to limit the rate of change of viscosity with temperature. These improvers have little effect on oil viscosity at low temperatures. However, when heated, the improvers enable the oil viscosity to

increase within the limited range permitted by the type and concentration of the additive. This quality is most apparent in the application of multigrade motor oils.

c. Emulsifiers. In most industrial applications, it is undesirable to have emulsified water in the oil. However, soluble oils require emulsifiers to promote rapid mixing of oil and water and to form stable emulsions. Soluble oils are used as lubricants and coolants for cutting, grinding, and drilling applications in machine shops. An emulsifier promotes the rapid mixing of oil and water to form a stable emulsion. Emulsifiers are used in motor oils to allow water, formed by combustion of fuel, to be kept in emulsion until engine heat can evaporate it. Emulsifiers are also used in soluble oils used in some metal working operations and in fire resistant hydraulic fluids. Emulsification is usually not a desirable property in most hydraulic fluids or turbine oils.

d. Demulsifiers. Demulsifiers promote separation of oil and water in lubricants exposed to water.

5-6. Lubricant Protective Additives.

Lubricant protective additives are employed to protect the lubricant instead of the equipment. Oxidation inhibitors and foam inhibitors are examples.

(1) Oxidation inhibitors. Oxidation inhibitors, or antioxidants, lengthen a lubricant's service or storage life by increasing its oxidation resistance by binding the free oxygen in the oil or by neutralizing the catalytic effect of metals. Over time, hydrocarbon molecules will react to incorporate oxygen atoms into their structure. This reaction produces acids, sludge, and varnish that foul or damage metal parts. At low temperatures and under minimal exposure to oxygen, this process is very slow. At temperatures above 180 °F (82 °C), the oxidation rate is doubled for every 18 °F (10 °C) rise in temperature. Oxidation of hydrocarbons is a very complex chemical process and depends on the nature of the oil. Oxidation inhibitors reduce the quantity of oxygen reacting with oil by forming inactive soluble compounds and by passivating metal-bearing surfaces to retard the oxidation rate. As previously noted, oxidation inhibitors are consumed as the oil ages. Oil condition should be monitored periodically to ensure that essential additives are maintained at safe levels. Oxidation inhibitors are used in most industrial lubricant applications where oil is continuously circulated or contained in a housing such as a gearbox.

(2) Foam inhibitors. Foam inhibitors prevent lubricant foaming by decreasing the surface tension of air bubbles, allowing them to combine into large ones, which break more rapidly. In many applications, air or other gases may become entrained in oil. Unless these gases are released, a foam is produced. Foaming can result in insufficient oil delivery to bearings, causing premature failure. Foam may also interfere with proper operation of equipment such as lubricating pumps and may result in false oil level readings. Under some circumstances foam may overflow from oil reservoirs. Foam inhibitors such as silicone polymers or polyacrylates are added to reduce foaming. They also prevent forming persistent foam by reducing surface tension of entrained air or gas bubbles.

5-7. Specialized Classifications and Manufacturer Product Data.

There are a number of specialized lubrication applications that require various additives. The type and number of additives and the type of petroleum (paraffinic or naphthenic) may be varied to

provide desirable qualities for a given application. Some of the more common specialty classifications are:

- Compressor oils (air, refrigerant).
- Engine oils (automotive, aircraft, marine, commercial).
- Quench oils (used in metal working).
- Cutting oils (coolants for metal cutting).
- Turbine oils.
- Gear oils.
- Insulating oils (transformers and circuit breakers).
- Way oils.
- Wire rope lubricants.
- Chain lubricants.
- Hydraulic oils.

a. General Purpose Oils and Turbine Oils. General purpose oils contain R&O (rust and oxidation) additives, AW agents, antifoam additives, and demulsifiers. They may be used in mechanical applications where a specialized oil is not required. Their ISO viscosity ranges from about 32 to around 460. These oils are often referred to as R&O oils or hydraulic oils although they may contain other additives and are not intended exclusively for hydraulic use. Some of these oils are more highly refined and provide longer life and better performance than others. These are usually referred to as “turbine oils” or premium grades. Although used in turbines, the name “turbine oil” does not mean their use is restricted to turbines, but refers to the quality of the oil. Chapter 9 of this manual discusses turbine oils in detail.

b. EP Gear Oils. These oils generally have a higher viscosity range, from about ISO Grade 68 to around 1500, and may be regarded as general purpose oils with EP additives. Although commonly used in gear systems, these oils can be used in any application where their viscosity range and additives are required. Gear oils should not be confused with SAE gear oils that are specially formulated for automotive applications. Automotive oils are not discussed in this manual.

c. Producer Brand Names. Oil producers often identify their products by names that may or may not be connected with standard classifications. Regardless of how much information may be implied by the brand name, it is insufficient to select a lubricant. A user must refer to the producer’s information brochures and specifications to determine the intended use, additives, and specifications.

d. Oil Producer’s Product Data and Specifications. Oil producers publish product information in brochures, pamphlets, handbooks, or on the product container or packaging. Although the amount of information varies, it generally includes the intended use, the additives (AW, EP, R&O, etc.), oil type (i.e., paraffinic, naphthenic, synthetic, compounded, etc.), and the specifications (Table 5-2). Some producers may identify the product by its usage classification such as those

noted above, or they may simply note the machinery class where the product can be used. Often, both methods of identification are used. Intended use designations can be misleading. For example, fact sheets for three different oils by the same producer indicate that the oils can be used for electric motors and general purpose applications. However, all three are not suitable for every application of this equipment. One oil contains no oxidation inhibitors and is intended for use where the oil is frequently replaced. The second is an R&O oil with the usual antifoaming and demulsifying agents. AW agents are also included. The third is a turbine oil similar to the second except that the refining method and additive package provide greater protection. One turbine viscosity grade, ISO 32, is treated to resist the effects of hydrogen used as a coolant in generators. Failure to notice these differences when evaluating the data can lead to incorrect application of these lubricants. Producers do not usually list additives. Instead, they indicate characteristics such as good antiwear qualities, good water resistance, or good oxidation resistance. These qualities are not inherent in oil or contained in sufficient quantities to provide the degree of protection necessary. Therefore, the user is safe in assuming that the appropriate agent has been added to obtain the given quality. Product literature also gives the oil type (i.e., paraffinic, naphthenic, residual compounded, or synthetic).

e. Producer Specifications. Producer specifications amount to a certification that the product meets or exceeds listed physical characteristics in terms of specific test values. The magnitude of chemical impurities may also be given. Producers vary somewhat in the amount of information in their specifications. However, kinematic viscosity (centistokes) at 104 and 212 °F (40 and 100 °C), SUS (saybolt viscosity) at 100 and 210 °F (37 and 98 °C), API gravity, pour point, and flash point are generally listed. Other physical and chemical measurements may also be given if they are considered to influence the intended use.

Table 5-2. Types of Additive Oil Required for Various Types of Machinery.

Type of Machinery	**Usual Base Oil Type**	**Usual Additives**	**Special Requirements**
Food-processing	Medicinal white oil	• None	• Safety in case of ingestion
Oil hydraulic	Paraffinic down to about -4°F (20 °C), naphthenic below	• Antioxidant • Antirust • Antiwear • Pour point depressant • VI improver • Antifoam	• Minimum viscosity change with temperature • Minimum wear of steel/steel
Steam and gas turbines	Paraffinic or naphthenic distillates	• Antioxidant • Antirust	• Ready separation from water • Good oxidation stability
Steam engine cylinders	Unrefined or refined residual or high viscosity distillates	• None or fatty oil	• Maintenance of oil film on hot surfaces; resistance to washing away by wet steam

Type of Machinery	Usual Base Oil Type	Usual Additives	Special Requirements
Air compressor cylinders	Paraffinic or naphthenic distillates	• Antioxidant • Antirust	• Low deposit formation tendency
Gears (steel/steel)	Paraffinic or naphthenic	• Antiwear • EP Antioxidant • Antifoam • Pour point depressant	• Protections against abrasion and scuffing
Gears (steel/bronze)	Paraffinic	• Oiliness • Antioxidant	• Reduce friction, temperature rise, wear, and oxidation
Machine tool slideways	Paraffinic or naphthenic	• Oiliness • Tackiness	• Maintains smooth sliding at very low speeds • Keeps film on vertical surfaces
Hermetically sealed refrigerators	Naphthenic	• None	• Good thermal stability • Miscibility with refrigerant • Low flow point
Diesel engines	Paraffinic or naphthenic	• Detergent Dispersant • Antioxidant • Acid-neutralizer • Antifoam • Antiwear • Corrosion inhibitor	• Vary with type of engine thus affecting additive combination
Reference: Neale, M.J. 1995. A *Tribology Handbook*. Butterworth-Heinemann Ltd., Oxford, England.			

5-8. Precautions. Additives alone do not establish oil quality with respect to oxidation resistance, emulsification, pour point, and viscosity index. Lubricant producers do not usually state the compounds that are used to enhance the lubricant quality, but only specify the generic function such as antiwear, EP agents, or oxidation inhibitors. Furthermore, producers do not always use the same additive to accomplish the same goal. Consequently, any two brands selected for the same application may not be chemically identical. Users must be aware of these differences, and also that the differences may be significant when mixing different products.

a. Additive depletion. Certain precautions must be observed with regard to lubricant additives. Some additives, such as antiwear and extreme pressure additives and rust, oxidation, and corrosion inhibitors, are consumed as they are used. When all of a particular additive has been

consumed, the lubricant is no longer capable of performing as originally intended. Usually this condition requires replacement of the lubricant, but in some cases, replenishment of the additive is possible. The lubricant manufacturer should be consulted before this is attempted. As these additives are consumed, lubricant performance for the specific application is reduced and equipment failure may result under continued use. Oil monitoring programs should be implemented to periodically test oils and verify that the essential additives have not been depleted to unacceptable levels.

b. Additive Quantity. When using oil additives, more is not always better. As more additive is blended into the oil, sometimes there is no more benefit gained, and at times the performance actually deteriorates. In other cases, the performance of the additive does not improve, but the duration of service does improve. In addition, increasing the percentage of a certain additive may improve one property of an oil while at the same time degrade another. When the specified concentrations of additives become unbalanced, overall oil quality can also be affected. Some additives compete with each other for the same space on a metal surface. If a high concentration of an antiwear agent is added to the oil, the corrosion inhibitor may become less effective. The result may be an increase in corrosion-related problems.

c. After-Market Additives. There are a number of after-market lubricant additives that are marketed as solutions to many lubricating problems. The automotive industry is probably the most heavily marketed. These additives supposedly improve the lubricating qualities to the lubricant. There may be cases where these additives actually improve performance in some way or at least appear to improve performance. However, in many cases their usefulness is questionable at best. These additives may actually reduce a lubricant's effectiveness by reacting with some of the additives already in the oil. The major lubricant manufacturers spend a great deal of time and money formulating their products to provide optimum performance for particular applications. If some additive is available that will improve a lubricant to the extent claimed by many of the after-market additive distributors, most lubricant manufacturers would have added it to their product. If a lubricant is not performing as it should, a different lubricant may be required, or some mechanical problem may exist. Before adding anything to a lubricant, the lubricant's manufacturer should be consulted. The lubricant manufacturer can provide information on the possible benefits or consequences of the additive and determine whether a different lubricant is required.

d. Product Incompatibility. Another important consideration is incompatibility of lubricants. Some oils, such as those used in turbine, hydraulic, motor, and gear applications are naturally acidic. Other oils, such as motor oils and transmission fluids, are alkaline. Acidic and alkaline lubricants are incompatible.

e. Storage Stability (Shelf Life Precaution). Some oil formulations will degrade over time. If stored for long periods of time, some formulations may require mixing and retesting before use to determine if the lubricant still meets intended performance levels.

f. Oil Temperature. Oil temperature can affect the suspension of additives in the parent oil. Oils should be operated at temperatures according to the manufacturer's guidelines. The maximum operating temperature should not be exceeded to avoid additive depletion. High temperatures can

rapidly deplete additives in the lubricant. A secondary heat exchanger should be considered and added to the system that will limit operating temperatures.

g. Filtration. Filtration can remove unsuspended additives. Proper pairing of oil temperature and filtration is needed for a system. The filter system will have a preferred fluid temperature range that needs to be coordinated with the supplier operating temperatures that allow additives to stay suspended. Alternatively, the temperature of the oil should be raised to a re-suspension level before filtration to avoid stripping the oil.

h. Mixing Different Lubricants. The additive packages between lubricants from different manufacturers are not always compatible. This is primarily due to incompatibility between additives. When servicing an oil lubricating system, the existing and new oils must be compatible. Oils that are rated for similar applications but that were produced by different manufacturers may be incompatible due to the additives used. When incompatible fluids are mixed, the additives may be consumed due to chemical reaction with one another. The resulting oil mixture may be deficient of essential additives and therefore unsuitable for the intended application. When fresh supplies of the oil in use are not available, the lubricant manufacturer should be consulted for recommendation of a compatible oil. Whenever oil is added to a system, the oil and equipment should be checked frequently to ensure that there are no adverse reactions between the new and existing oil. Specific checks should include bearing temperatures and signs of foaming, rust, or corrosion.

i. Substitution Chart. A substitution list or chart is valuable because it correlates the array of brand names used by producers. Furthermore, it eliminates producers who do not have the desired product in their line. A substitution list should be regarded as a starting point to quickly identify potential selections. The lists do not suggest or imply that lubricants listed as being equivalent are identical or that the additive packages are compatible. The lists do indicate that the two lubricants are in the same class, have the same viscosity, and are intended for the same general use. The chart of interchangeable industrial lubricants lists the following categories:

- General purpose lubricants.
- Antiwear hydraulic oil.
- Spindle oil.

.

CHAPTER 6

Filtration

6-1. Oil Filtration, Purification, and Water Control.

a. General. Contamination of hydraulic and lubrication systems is a major cause of machinery failure and affects component wear and reliability. Fluid cleanliness is critical to establish equipment reliability. Proper filtration improves fluid cleanliness, which results in longer fluid life. Also proper filtration makes equipment more reliable, and reduces the need for machinery maintenance, lowers component replacement costs, and lessens downtime. Most damage-causing particles in hydraulic and lubrication systems are smaller than 14μm (microns) and cannot be seen by the unaided eye (Note: 1 micron = 1 millionth of a meter or 25 microns is approximately equal to 0.001 in.).

b. Oil Contamination and Testing Program. Oil must be free of contaminants to perform properly. Most hydraulic and other lubrication systems use an inline filter to continually filter the oil while the system is operating to maintain the required cleanliness rating in accordance with the ISO standard discussed below. An examination and inspection of filter elements should be done on a periodic basis. This will allow and provide an indication for the proper service intervals of machinery and equipment. A lubrication testing and monitoring system shall be established, followed, periodically accessed, and adjusted for all hydropower plants, locks, dams, and other similar USACE facilities. Filter, flush, or purify oil periodically as dictated by the results of the oil testing program and per ASTM D6439. New oil should be filtered before being used in machinery especially hydraulic fluid, turbine oils, and gearbox oils. Water is the most common contaminant found in hydroelectric plants and is also commonly found in many other equipment lubrication systems such as gearboxes. Its presence in oil may promote oxidation, corrosion, sludge formation, foaming, additive depletion, and generally reduce a lubricant's effectiveness. Solid contaminants such as dirt, dust, or wear particles also may be present. These solid particles may increase wear, promote sludge formation and foaming, and restrict oil flow within the system. This chapter will provide some of the most common methods used to remove contaminants from oil. This chapter will also provide some general guidelines for flushing lubricating oil systems.

c. New Oil Filtration. In many cases, new oil can be the dirtiest oil in the system and plant. The containers used to store lubricants are often reused and may be subjected to many extreme conditions before they reach the end user. Lubricant manufacturers are not required to ensure the cleanliness of the lubricant they provide unless it is advertised as meeting a specified cleanliness rating, or the cleanliness rating is written into the lubricant purchase specification. For all hydropower plants (turbine oils), locks, dams, and other similar facilities, the cleanliness rating of new oil and lubricants should be written into the specification. In addition, the specifications should require testing and certification of the supplied oil before acceptance and installation of oil in the facility or system. The ISO cleanliness codes are discussed later in this chapter. Oil out of shipping containers is usually contaminated to a level above what is acceptable for most hydraulic systems. The oil from shipping containers typically has a cleanliness level about the same as ISO 4406 Code 23/21/19, and water content could be as high as 200 to 300 ppm. Most hydraulic systems require ISO cleanliness levels much lower than this. Routine analysis of new

oils should be employed to ensure effective contamination control. New oil should be introduced to the system through sufficient filtration to meet minimum system cleanliness levels.

d. Oil Purification and Filtration. The terms oil "purification" and "filtration" are often used interchangeably. Filtration can be considered a primary means of contamination control and is often provided by the equipment manufacturer. This is typically done using mechanical filtration and media. It is intended to filter out the larger contaminants and particles. Oil purification is often referred to as secondary filtration above and beyond the initial primary filtration. It is intended to extend the life of the oil by cleaning it, filtering out the smaller contaminants, and removing water. The advantage of oil purification is not only that it extends the life of the oil, but also that it extends the life of the equipment by keeping oil clean. This chapter provides a general overview of filtration and purification and discusses several methods of oil filtration and purification. Chapter 9 includes more specific discussion on filtration related to turbine oils. Chapter 10 provides specific discussion on filtration related to hydraulic systems. Table 7-2 in Chapter 7 lists specific and targeted cleanliness codes for bearings, machinery, etc. The equipment manufacturer should also be consulted for their recommendation, especially for new equipment.

6-2. Methods for Particle Counting.

a. ISO 4406 (1999) "Hydraulic fluid power – Fluids – Method for coding the level of contamination by solid particles" is an internationally recognized standard that expresses the level of particulate contamination of a hydraulic fluid. This is the preferred standard for particle counting. This standard is also used to specify the required cleanliness level for other oils and systems. ISO 4406 is a hydraulic cleanliness rating system that is based on a number of contamination particles in a 1-milliliter (ml) fluid sample. Once the number and size of the particles are determined, the points are plotted on a standardized chart of ISO range numbers to convert the particle counts into an ISO 4406 rating. The ISO 4406 rating provides three range numbers that are separated by a slash, such as 16/14/12. All three values for applicable range numbers can be determined through the use of the ISO 4406 standardized chart based on the actual number of particles counted within the 1-ml sample for each size category. The first number represents the number of particles present measuring greater than 4µm. The second represents particles greater than 6µm and the third represents those greater than 14µm.

b. Other Standards for Measuring Contamination of Fluids. Other standards are available for particle counting, but are not as widely used. The SAE J1165 "Reporting Cleanliness Levels of Hydraulic Fluids," was and still is used extensively, but has been recently cancelled and superseded by ISO 4406. This classification system uses a two number system based on the number of contamination particles greater than 5 µm and 15 µm. It is important to have the testing firm document the standard they are using for contamination testing. Testing at USACE facilities should be done using the current three number ISO 4406 standard. Sometimes a testing firm will use the current ISO rating system, but only use two numbers. If only two numbers are used, then the 4µm number is deleted and the 6µm and 14µm numbers are used.

c. The ISO 4406 standard uses a three number system to classify system cleanliness, e.g., 18/16/13. As noted above, the first number represents the number of particles present measuring greater than 4µm, the second represents particles greater than 6µm, and the third represents those

greater than 14µm (Figure 6-1). Table 6-1 lists the ISO 4406 range numbers. As the range number increases by one value, the number of particles in a sample of oil will double. On the range code, each number is double the range below. For example, an oil with a code of 19/17/14 should contain twice as many particles in each size category as the code of 18/16/13. For critical components, particle counting and testing should be repeated to confirm the ISO rating.

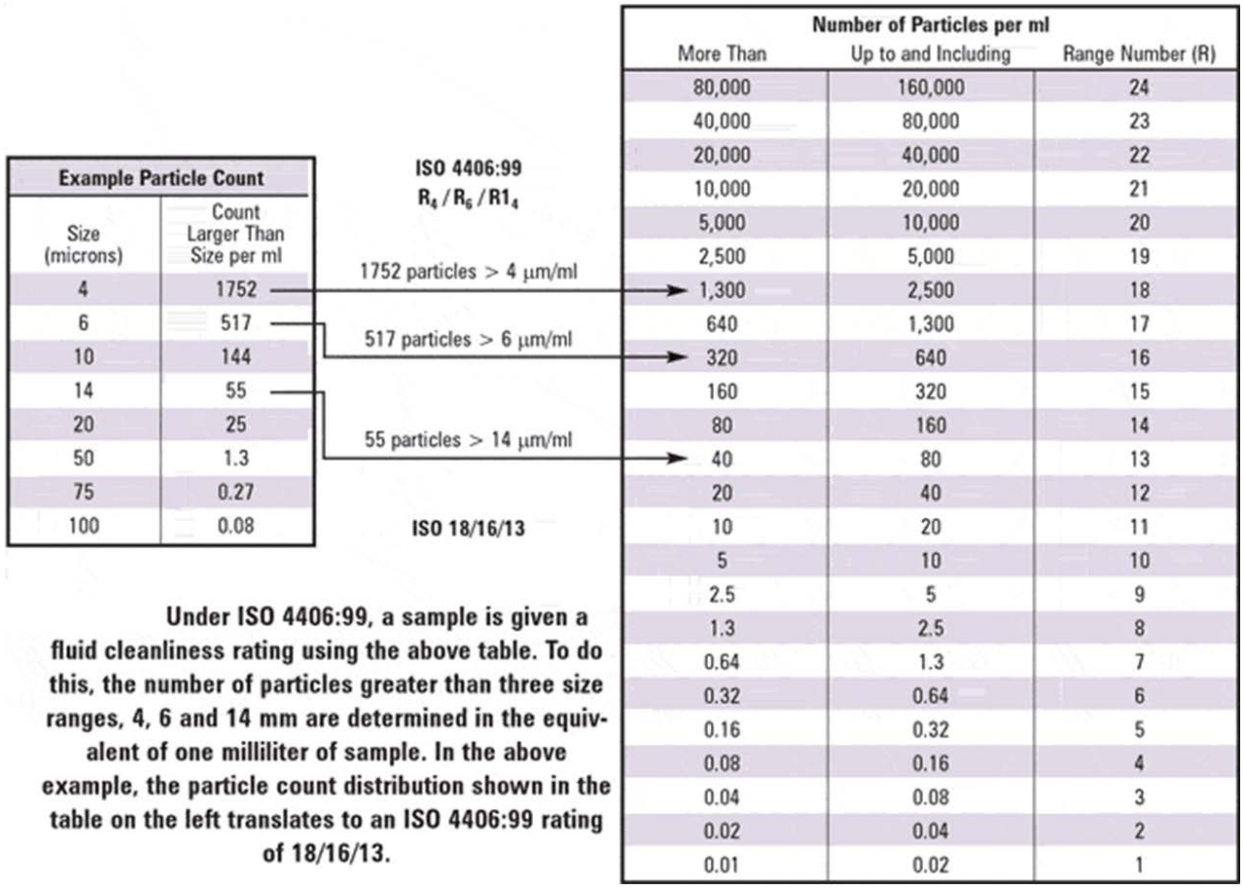

Example Particle Count	
Size (microns)	Count Larger Than Size per ml
4	1752
6	517
10	144
14	55
20	25
50	1.3
75	0.27
100	0.08

ISO 4406:99
$R_4 / R_6 / R1_4$

1752 particles > 4 µm/ml

517 particles > 6 µm/ml

55 particles > 14 µm/ml

ISO 18/16/13

Number of Particles per ml		
More Than	Up to and Including	Range Number (R)
80,000	160,000	24
40,000	80,000	23
20,000	40,000	22
10,000	20,000	21
5,000	10,000	20
2,500	5,000	19
1,300	2,500	18
640	1,300	17
320	640	16
160	320	15
80	160	14
40	80	13
20	40	12
10	20	11
5	10	10
2.5	5	9
1.3	2.5	8
0.64	1.3	7
0.32	0.64	6
0.16	0.32	5
0.08	0.16	4
0.04	0.08	3
0.02	0.04	2
0.01	0.02	1

Under ISO 4406:99, a sample is given a fluid cleanliness rating using the above table. To do this, the number of particles greater than three size ranges, 4, 6 and 14 mm are determined in the equivalent of one milliliter of sample. In the above example, the particle count distribution shown in the table on the left translates to an ISO 4406:99 rating of 18/16/13.

Source: ***Noria Practical Handbook of Machinery Lubrication*** **(Noria 2011)**

Figure 6-1. ISO 4406:99 Method for Rating Fluid Cleanliness.

Table 6-1. ISO 4406 Range Numbers.

Number of Particles per ml		
Greater Than	**Less Than**	**ISO 4406 Range Number**
80,000	160,000	24
40,000	80,000	23
20,000	40,000	22
10,000	20,000	21
5,000	10,000	20

Number of Particles per ml		ISO 4406 Range Number
Greater Than	**Less Than**	
2,500	5,000	19
1,300	2,500	18
640	1,300	17
320	640	16
160	320	15
80	160	14
40	80	13
20	40	12
10	20	11
5	10	10
2.5	5	9
1.3	2.5	8
0.64	1.3	7
0.32	0.64	6
0.16	0.32	5
0.08	0.16	4
0.04	0.08	3
0.02	0.04	2
0.01	0.02	1

©ISO. This material is reproduced from ISO 4406:1999 with the permission of the American National Standards Institute (ANSI) on behalf of ISO. All rights reserved.

d. Hydraulic Components. Chapter 10 provides a discussion of hydraulic systems in more detail. Hydraulic systems are especially vulnerable to particle contamination. Many hydraulic system failures are a direct result of fluid contamination. Proper filtration reduces operating costs and improves reliability of hydraulic machinery. In a hydraulic system, the liquid is both a lubricant and a power-transmitting medium that is also under high pressure. The presence of solid contaminant particles in the liquid interferes with the ability of the hydraulic fluid to lubricate and causes wear to the components. The extent of contamination in the fluid has a direct bearing on the performance and reliability of the system. Table 6-2 shows some typical required ISO ratings for hydraulic machinery. Chapter 10 provides some more specific requirements. As noted above, Table 7-2 in Chapter 7 also lists more specific and targeted cleanliness codes for bearings, machinery, etc. Also, as previously noted, the equipment manufacturer should be consulted for their recommendations for required cleanliness ratings,

especially for new equipment. In new hydraulic system installations, it is important to flush and clean the system before it is operated. The reader should refer to UFGS 35 05 40.14, *Hydraulic Power Systems for Civil Works Structures* (May 2014) for hydraulic cleaning and flushing requirements. ASTM D6439 also provides guidelines for flushing and cleaning hydraulic systems.

Table 6-2. Typical Required ISO Ratings for Hydraulic Equipment.

Components	**ISO Code**
Servo control valves	16/14/11
Proportional valves	17/15/12
Valve and piston pumps/motors	18/16/13
Directional and pressure control valves	18/16/13
Gear pumps/motors	19/17/14
Flow control valves, cylinders	20/18/15
Source: Courtesy of Vickers Hydraulics.	

6-3. Filter Ratings and General Discussion.

a. Beta rating. The Beta rating expresses the separating effectiveness of a filter. Beta ratings are an important piece of information for selecting filter elements. These ratings give an idea of how efficient a filter element will be at removing various particle and contamination sizes. It provides a method of comparing filter performance based on efficiency. This is done using the Multipass test, which counts the number of particles of a given size before and after fluid passes through a filter. The Beta rating comes from the ISO 16889 standard. ISO 16889, "Hydraulic fluid power - Filters - Multipass method for evaluating filtration performance of a filter element," is an industry standard used to evaluate filter element performance. During the Multipass test, fluid is circulated through the circuit under precisely controlled and monitored conditions. The differential pressure across the test element is continuously recorded, as a constant amount of contaminant is injected upstream of the element. The test provides a method to determine the filtration efficiency, using what is called the "beta ratio." The beta ratio is in turn used to calculate the filtration efficiency.

(1) The Beta Ratio equals the ratio of the number of particles of a minimum given size (in microns) upstream of the filter to the number of particles of the same size and larger found downstream, i.e., the higher the Beta Ratio the higher the capture efficiency of the filter; the lower the Beta Ratio, the worse the efficiency. As the particle size becomes larger, it is generally easier for a filter to remove it. Therefore, for larger particle sizes, the Beta Ratio is usually larger. The Beta Ratio then, βx, = Number of Particle X size upstream/Number of Particles X size downstream.

(2) Assume that 50,000 particles >10 μm were counted upstream of the filter and 250 particles >10 μm were counted downstream of the filter. The Beta Ratio would be $\beta 10(c) = 50000/250 = 200$. A Beta rating of $\beta 2=200$ means that, for every 200 particles greater than 2 microns that entered the

filter, only one particle would leave the filter. For most equipment in hydroelectric power plants, a $\beta 5 = 200$ filter is sufficient, but if cleaner oil is desired, a $\beta 2=200$ can be used. Before using extremely fine filters, the oil manufacturer should be contacted to verify a recommendation for a minimum filter rating. Some additives may be filtered out of the oil if the filter medium is too fine.

(3) The efficiency of the filter can be calculated directly from the Beta Ratio. The efficiency is stated as $(\beta x-1/\beta x) \times 100$. A Beta 1000, 5-micron filter is thus said to be 99.99% efficient at removing 5 micron and larger particles. A Beta Ratio of 200 would have an efficiency of 99.5%.

(4) Caution must be exercised when using Beta Ratios since they do not take into account field operating conditions such as pressure surges and changes in temperature, which can affect real life performance. A filter's Beta Ratio also does not give any indication of its dirt-holding capacity, the total amount of material that can be trapped by the filter throughout its life, nor does it account for how the capture efficiency changes over time. Nevertheless, Beta Ratios are an effective way of gauging the expected performance of a filter.

(5) The ISO standard for Multipass filter testing (ISO 16889) has changed to require filter manufacturers to determine the average particle sizes that yield Beta Ratios equal to 2, 10, 75, 100, 200, and 1000, again using the multipass test stand approach. The new standard gives a better interpretation of a filter's overall performance.

b. Absolute Rating. Filter manufacturers will sometimes provide an absolute rating. An absolute rating means that no particles greater than a certain size will pass through the filter, based on the maximum pore size of the filtering medium. It can also be considered the diameter of the largest hard spherical particle that will pass through a filter under specified test conditions. This is an indication of the largest opening in the filter elements. However, most particles in oil are not spherical. A general industry definition for absolute rating is to state the micron size at which the filter achieves a Beta Rating of 75 or is 98.7% efficient.

c. Nominal Rating. "Nominal rating" is not an industry standard, but an arbitrary value assigned by the filter manufacturer. The nominal rating value indicates that a filter stops most particles of a certain micron size. Due to its imprecision, filter selection by nominal rating could lead to system contamination and component failure.

d. Filter Sizing. Filter sizing is critical. One of the easiest ways to prolong the filter change-out interval is by simply over sizing the filter. Never use coarse filters in an attempt to obtain longer filter life. If contamination levels are high and it is necessary to change filters often, obtain and install larger filters of the same quality to increase dirt capacity. Filters can also be installed in parallel to increase dirt-holding capacity. Another option is to use a series of filters with the higher micron contaminants removed first. It is important to size filters for cold startup oil viscosity. This can be from 3 to 30 times the operation viscosity, and can cause pressure drop upstream of the filter. Suction strainers and filters must be oversized. Install off-line filtration, kidney filtration, or use filter carts to further filter and purify the oil and control small contaminants.

e. Differential Pressure Indicators. Filters should be provided with a differential pressure indicator. The viscosity of the oil and flow rate will determine the pressure drop across a filter.

The normal situation is for the differential pressure across a filter to increase with time. This indicates particles are collecting on the filter elements and reducing the size of the pores in the filter and increasing the efficiency. However, it is not a good practice to schedule filter replacement by relying solely on reading of a differential pressure across the filter, because it fails to indicate the following conditions: bypass valve stuck open, ruptured filter media, or a faulty differential pressure indicator. The cleanliness of the oil must be checked if the pressure differential across a filter has dropped. This indicates the efficiency of the filter has decreased and the ISO 4406 particle count of the oil has increased. This type of scenario also could indicate either a filter of poor quality or the filter is failing.

f. Filter Replacement and Oil Testing. The Particle Counting Test (ISO 4406) is the best method to use in the process of scheduling filter replacement and checking the system's efficiency and contamination of oil. A portable particle could be used for an onsite analysis. The instrument allows personnel to have instantaneous information of the efficiency for all filtration systems at their powerhouse or lock and dam site.

g. Gearbox Filtration. If replacing the oil in a gearbox, make sure to drain the oil within 15 minutes of shutdown. Also, pre-filter any new oil. Alternatively, instead of draining the oil, periodically filter the oil with a portable filtration cart while the machine is operating. Another option is to use a dedicated kidney filter discussed below. Site staff should sample and analyze the oil periodically to determine if it needs to be changed. This strategy will reduce the overall cost of maintenance and extend the life of the gearbox. New gearboxes should be cleaned and flushed per ASTM D6439.

6-4. Filtration and Purification.

a. Gravity Filtration. Gravity filtration or purification is the separation or settling of contaminants that are heavier than the oil. Gravity separation occurs while oil is in storage, but is usually not considered an adequate means of purification for most applications. Other filtration methods should also be used in addition to gravity separation.

b. Mechanical Separation – Filter Media (Most Common). Particulate removal is typically done with mechanical filters. Mechanical filtration removes contaminants by forcing the oil through a filter medium with holes smaller than the contaminants. Mechanical separation uses either full flow or depth filtration to filter and purify the oil. These types of filters are very simple to operate and maintain. Mechanical filters with fine filtration media can remove particles as small as 1 micron, but filtration under 5 microns is not recommended because many of the oil additives will be removed. A typical mechanical filter for turbine oil would use a 6 to 10-micron filter. The filter media will require periodic replacement as the contaminants collect on the medium's surface.

(1) A number of different filter media are available. The job of the media is to capture particles and allow the fluid to flow through. For fluid to pass through, the media must have holes or channels to direct the fluid flow and allow it to pass. Filter media is a porous mat of fibers that alters the fluid flow stream by causing fluid to twist, turn, and accelerate during passage (Figure 6-2). The fluid changes direction as it comes into contact with the media fibers. As the fluid flows through the media, it changes direction continuously as it works its way through the maze of media fibers. As it

works its way through the depths of the layers of fibers, the fluid becomes cleaner and cleaner. Generally, the thicker the media, the greater the dirt-holding capacity it has. Course media will have lower pressure drop, but less efficiency. Fine media will have greater pressure drop, but more efficiency.

(2) There are two common types of filters: surface or membrane filters and depth filters. Surface filters simply trap particles on the surface or face of the filter. Depth filters allow the oil to flow throughout the body or depth of the filter and trap particles throughout the media. Common filter media include cellulose fiber, glass fiber, and synthetic media. The efficiency depends on pore sizes and their depth.

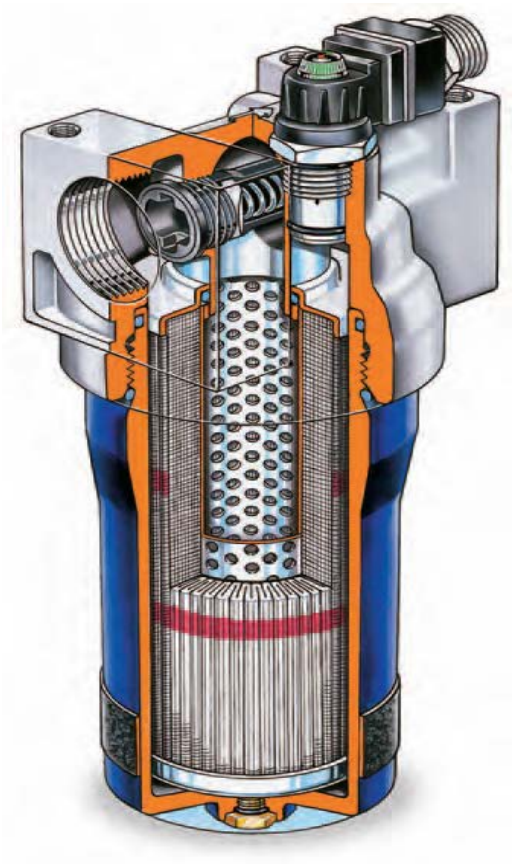

Source: Courtesy of Parker Hydraulic Filtration.

Figure 6-2. Typical Mechanical Filter for a Hydraulic System.

(3) Cellulose media are primarily used in low pressure applications. They have low initial cost. Cellulose fibers are actually wood fibers, microscopic in size and held together by resin. Fibers are irregular in both shape and size. Cellulose often has lower Beta ratings, which means there are smaller pores in the media. Smaller media pores will cause more flow resistance, resulting in higher pressure drop.

(4) Fiberglass media have moderate initial cost. They have high capture efficiency and dirt-holding capacity. Generally they have more pores per square inch and consistent pore size and dirt-holding capacity. They have a higher dirt-holding capacity and tolerate high temperatures.

(5) Synthetic fibers are smooth, rounded, and provide the least resistance to flow. Their consistent shape allows for control of the fiber size and distribution pattern throughout the media mat to create the smoothest, least inhibited fluid flow. Consistency of fiber shape allows the maximum amount of contaminant-catching surface area and specific pore size control. The result is media with predictable filtration efficiencies at removing specified contaminants and maximum dirt-holding capacity. The low resistance of synthetic media to fluid flow makes it ideal for use with synthetic fluids, water glycols, water/oil emulsions, hydraulic fluids, and petroleum-based fluids. Synthetic fibers also perform better in the harsh environments that tend to destroy cellulose filters.

(6) Maintenance considerations. Install inline filters in an area that one can easily and readily access the filter media and any indicator (such as a delta-P indicator) to promote proper maintenance. For example, only add a filter in the pump suction line if it is placed where it does not require draining of a reservoir, and has a delta-P indicator that is visible. It is far worse to have a clogged filter starve and fail the pump than to have some particles enter the pump.

c. Centrifugal Separation. Centrifugal filtration is gravity separation accelerated by the centrifugal forces developed by rotating the oil at high speed. These systems use a spinning bowl or disc to separate both water and solid contamination from the oil. They use heat and full flow media to aid in purifying the oil. Centrifugal purification is an effective means of removing water and most solid contaminants from the oil. The rate of purification depends on the viscosity of the oil in a container and the size of the contaminants. Centrifugal systems can be complicated to operate and are difficult to maintain and usually require special training. Instead of filtering the mixture of solid and liquid particles, the mixture is centrifuged to force the (usually) denser solid to the bottom, where it often forms a firm cake. The liquid above can then be decanted. This method is especially useful for separating solids that do not filter well, such as gelatinous or fine particles. This type of filtration usually does not work well with high viscosity oils.

d. Coalescence Purification. A coalescing filter system uses special cartridges to combine small, dispersed water droplets into larger drops. These systems bring water molecules together with each other for gravity to separate the water from the oil and to allow for draining the water off of the system. They use full flow or depth media to aid in purifying the oil. The larger water drops are retained within a separator screen and fall to the bottom of the filter while the dry oil passes through the screen. A coalescing filter will also remove solid contaminants by mechanical filtration. Coalescing systems are simple to operate and maintain, but are not always reliable. Temperature, flow rate, and oil type affect coalescing efficiency. This type of system does not work well with hydraulic oils and some turbine oils (Type II).

e. Adsorptive Separation (Chemical Process). Adsorption or surface-attraction purification uses an active-type medium such as fuller’s earth to remove oil oxidation products by their attraction or adherence to the large internal surfaces of the media. Because adsorption purification will also remove many oil additives, this method should not be used for turbine oil purification.

f. Electrostatic Separation (Electrostatic Filter). This type of system can purify oil to very low ISO contamination levels. The operation is based on the electrostatic principle of opposite attraction. It removes all charged particles regardless of their size. Unlike conventional filtration, electrostatic filtration has the ability to remove sub-micron sized particulate without the need for

expensive absolute rated filtration media. This technology works on the principle of electrostatic and electromagnetic attraction of positively and negatively charged particles for sub-micron cleaning to ISO levels of 10/7/0. It is commonly used on transformer oils.

g. Vacuum Dehydration. A vacuum dehydration system (Figure 6-3) removes water from oil through the application of heat and vacuum. The contaminated oil is exposed to a vacuum and is heated to temperatures of approximately 100º F to 140º F (38ºC to 60º C). The water is removed as a vapor. Care must be exercised to ensure that desirable low vapor pressure components and additives are not removed by the heat or vacuum. Vacuum dehydration can be complicated to operate and does require special training. This system is usually easy to maintain and is very effective for water removal. It is capable of removing dissolved water down below 5 ppm. These systems are always coupled with media-based filtration. They are useful for not only removing free and emulsified water, but also can remove dissolved water. This system is useful in hydraulic systems, gear oils, lubrication oils, and turbine oils (regardless of base oil type). Vacuum dehydration does not work well with high viscosity oils.

Figure 6-3. Vacuum Dehydrator.

h. Off-Line Filtration Kidney Loop. One very effective way of ensuring thorough fluid conditioning is with a dedicated off-line circulation loop, or “kidney” loop. This system uses a separate circulation pump that runs continuously, circulating and conditioning the fluid. Multiple stages and types of filters can be included in the circuit, as well as heat exchangers and inline immersion heaters. A sampling valve for testing the oil can also be incorporated into the kidney loop system. Kidney loop filtration has been used effectively in many applications such as turbine systems, vacuum pumps, and gear boxes (Figure 6-4).

Figure 6-4. Kidney Filter for a Gearbox.

i. Benefits of Off-Line Filtration. There are many benefits of off-line filtration. This type of filtration can be used to filter the first full tank of fluid to the desired cleanliness levels before the main system pump is started. The off-line (bypass) system is not only capable of achieving a low level of contamination, but by using this system for topping-up, it can eliminate the dangers inherent to the normal methods of adding fluid. Changing the element does not involve stopping the main system so filter maintenance can be planned, scheduled, and carried out at designated time. If the system is left running continuously, it provides a complete tank of very clean fluid ready for every startup. Since most off-line filtrations systems are additions to existing or off-the-shelf system, the user should ensure the proper location of system fluid removal and reintroduction ports to promote the best circulation of fluid without impact to the primary system.

j. Filter Carts. When using a filter cart, the oil is taken from a dirty sump, filtered, and returned to the dirty sump. The cleanliness of the filtered oil is diluted by the dirty oil still residing in the tank. To overcome the dilution effect, the tank volume must pass through the filter approximately seven times to achieve the equivalent of single-pass filtration (where the oil is pumped from one container to another through a filter). For example, with a 30-gallon tank and a filter cart that pumps at 5 gallon gallons per minute (gpm) (18.93 L/min), the cart will need to operate for 42 minutes to equal single-pass filtration (30 gallons multiplied by 7, divided by 5 gpm; or 113.5 L multiplied by 7, divided by 18.93 L/min).

6-5. Water Contamination and Removal.

a. A number of techniques exist to prevent water or moisture ingression or to remove water once it is present in a hydraulic or lubrication oil system. The best choice of technique for removal depends on the whether or not the water exists as a separate phase (dissolved or free), and also on the quantity of water present. For example, the presence of water or moisture can be reduced or prevented from entering a fluid reservoir through the use of bladder type reservoir isolators, absorptive or desiccant breathers, or active venting systems. Water can enter a system through worn seals or through reservoir openings. Condensation is also a prime water source. As the fluids cool in a reservoir or tank, water vapor will condense on the inside surfaces. A simple

"crackle" test will give some indication of the level of water in the oil. However, the oil should be tested to give a true reading of water contamination.

b. In an oil lubrication system, water is present in either a dissolved form, emulsified form, or a free form. All new lubricating oils will have some level of dissolved water, typically 50 to 100 ppm. The saturation point of an oil at a given temperature is the maximum amount of water the oil will dissolve (Table 6-3). Water contamination can be dissolved (completely mixed with the oil) and the fluid may look clear at lower water content, below the saturation point. At higher water content levels, above the saturation point, the water is "free" or "emulsified" and the fluid looks milky. The saturation point varies greatly depending on the type of lubricating oil. Free water will eventually settle to the bottom of a reservoir or tank since its density is higher than that of oil. The temperature of the oil has a significant role in how much water can be dissolved. The higher the oil temperature, the more water that can be dissolved in the oil. When draining off water from a reservoir, the oil should be allowed to cool.

Table 6-3. Typical Saturation Points of Different Fluids. Note That These Can Vary Greatly Depending on Temperature and Type of Oil.

Fluid Type	**PPM**	**Percent**
Hydraulic Fluid	300	0.03%
Lubrication Fluid	400	0.04%
Transformer Fluid	50	0.005%

c. Methods of Water Control. Prevent moisture from entering a fluid reservoir by using absorptive breathers or active venting systems (Table 6-4). For free water in smaller amounts, use water absorbing filters or active venting. Free water may collect and settle to the tank bottom where it can be simply drained out. Vacuum dehydration, coalescence, and centrifuge methods are more extreme methods of water control. However, for large quantities of water, vacuum dehydration, coalescence, and centrifuges are appropriate techniques for water removal. Each of these techniques operates on different principles and has various levels of water removal effectiveness. Gravity separation can also be considered another method of water control.

Table 6-4. Water Prevention and Removal Techniques.

Technique	Usage	Prevents Humidity Ingression	Removes Dissolved Water	Removes Free Water	Removes Large Quantities of Free Water	Limit of Water Removal
Bladder Type Reservoir Isolator	Prevention	Y				N/A
Adsorptive Passive breather	Prevention	Y				N/A
Active Venting system	Prevention and removal	Y	Y	Y		Down to <10% saturation
Water-Absorbing Cartridge Filter	Removal			Y		Down to <100% saturation
Cartridge	Removal			Y	Y	Down to <100% saturation
Coalescer	Removal			Y	Y	Down to <100% saturation
Vacuum Dehydrater	Removal		Y	Y	Y	Down to <-20% saturation
Source: Courtesy of Donaldson Hydraulic Filtration 101.						

(1) Gravity separation. Because water generally has a higher specific gravity than lubricating and hydraulic oils, water tends to settle at the bottom of the reservoir, given sufficient resident time in a still environment. Increasing the fluid's temperature and employing a cone-shaped separating tank improve the effectiveness of gravity separation. High fluid viscosity, oxidation byproducts, and polar additives and impurities inhibit the effective separation of oil and water. Gravity separation alone does not remove tightly emulsified or dissolved water.

(2) Centrifuge separation. As discussed previously, by spinning the fluid, the difference in specific gravity between the fluid and the water is magnified. Centrifugal separators remove free water more quickly than do gravity separators. They also remove some emulsified water depending on the relative strength of the emulsion vs. the centrifugal force of the separator. Centrifugal separators do not remove dissolved water. They are an excellent option for continuous decontamination of fluids with excellent demulsibility (water-separating characteristics).

(3) Coalescing separation. Coalescing separators help small droplets of water combine to form large ones so they will drop out of the oil more easily. This is achieved because large droplets have less surface contact with the fluid than an equal volume of water dispersed as tiny droplets. Coalescing separators are more effective when the oil's viscosity is low, making them an ideal solution for removing water from fuel. Coalescing separators do not remove dissolved water.

(4) Absorbent polymer separation. Free and emulsified water is collected by super absorbent polymers impregnated in the media of certain filters. The water causes the polymer to swell and remain trapped in the filter's media. They are not well suited for removing large volumes of water, but they are a convenient way to maintain dry conditions in systems that do not normally ingest a lot of water. These filters do not remove dissolved water.

(5) Vacuum dehydration. This technique effectively removes free, emulsified, and dissolved water. It is one of the only systems that will remove dissolved water. These devices effectively

remove water at a temperature that does not cause much damage to the base oil or additives. There is some risk of additive vaporization with this technique. Vacuum dehydration is used extensively in hydroelectric plants.

d. Effects of Water. New oils will typically have 50 ppm to 100 ppm dissolved water. Water in lubricating oil has a number of detrimental effects. It affects both the oil and equipment. Water will eventually breakdown the base oil and additives. It creates sludge and acids in the oil. For the machinery components, water will create rust and corrosion. In high enough concentrations, it will damage filters. Water promotes oxidation of the lubricant's base oil. It hydrolyzes (chemically attacks) additives, compromises their performance, and washes them out of oil. It produces highly corrosive byproducts. A water-degraded lubricant cannot fully lubricate and protect the machinery components, which leads to excessive wear and failure.

(1) Rust and corrosion. Water directly attacks iron and steel surfaces to produce iron oxides. Water teams up with acid in the oil to increase the corrosive potential in the attack of ferrous and nonferrous metals. Rust and corrosion lead to rapid surface deterioration since rust particles are also abrasive. Abrasion also exposes fresh nascent base metal, which is more easily corroded in the presence of water and acid.

(2) Cavitation. If the vapor pressure of water is reached in the low pressure regions of a machine, such as the suction line of a pump, the preload region of a journal bearing, etc., the vapor bubbles expand. When the vapor bubble is exposed to sudden high pressure, such as in a pump or the load zone of a journal bearing, the water vapor bubbles quickly contract (implode) and simultaneously condense back to the liquid phase. The water droplet can then impact a small area of the machine's surface with great force in the form of a needle-like micro-jet, which causes localized surface fatigue and erosion (Figure 6-5). Water contamination also increases the oil's ability to entrain air, thus increasing gaseous cavitation.

Figure 6-5. Cavitation Damage on a Hydraulic Pump.

(3) Rolling element bearings and film strength loss. Water greatly affects rolling bearings and decreases their lifespan. Water contamination increases contact fatigue (spalling failure) caused by surface-to-surface rolling contact in elastohydrodynamic (EHD) contact region of rolling element bearings and also the pitch line of a gear tooth. The strength of the lubricating film occurs because the oil's viscosity increases as pressure increases. Water does not possess this property. Its viscosity remains constant (or drops slightly) as pressure increases. As a result, in these high pressure zones, hydrogen-induced wear occurs, causing embrittlement and blistering. A small amount of water in the contact zone of bearings will cause loss of the oil film and damage to the bearing surface.

6-6. Cleaning and Flushing. New hydraulic systems, turbine systems, and gearboxes need to be cleaned and flushed before going into operation. The manufacturing process of hydraulic systems can leave behind machine slag and residue. Hydroelectric turbine systems need to be cleaned and flushed during oil replacement. After the emergence of new paraffinic (Group II) oils, flushing became one of the most important steps in turbine oils replacement process. ASTM D6439 provides a general guide for cleaning and flushing these systems. The benefits of filtration and purification of oil lubrication systems can be significantly reduced if the lubricating systems are not initially cleaned to a level that will prevent component damage on initial startup after manufacturing or rebuilding.

a. Thorough cleaning and flushing is required to minimize and remove contaminants during fabrication, rebuilding, or installation of hydraulic, turbine, and other mechanical systems. Because contaminants will remain from these processes, it is necessary to flush and purify the system to remove them before startup. In new systems, the emphasis is on the removal of contaminants introduced during manufacture, storage, field fabrication, and installation. In operational systems, the emphasis is on the removal of contaminants that are generated during operation. Failure of systems and components can also occur during machinery operation, which can also introduce contaminants.

b. Flushing is an important part of preventive maintenance for all rotational equipment and systems. Flushing oil lubrication and hydraulic systems should be designed as a part of the lifelong maintenance program. A means for flushing these systems should be included in the design phase and incorporated into the plans and specifications. Once samples from the system indicate the specified cleanliness level has been reached, continue flushing for at least 30 more minutes at turbulent flow. This increases the probability of removing adherent particles from tube walls. The flushing fluid should be compatible with the fluid used during normal system operation. Perform new cleaning and hot oil flushing after component changes, assembly, disassembly, or similar procedures have occurred. The original filters in the system should not be used as flushing filters. Dedicated flushing filters should be used. The flushing filter is important for two essential reasons. First, it determines the final cleanliness level, and second, it determines the rate at which this level can be reached.

c. Reservoirs. This is one of the most difficult components of a system to flush. The system reservoir should be cleaned manually then filled with flushing fluid. Use a flushing pump with an inline filter to circulate and flush the reservoir.

d. Cylinders, Accumulators, Motors, and Pumps. Clean these separately. The components that have bidirectional movement must be actuated to full movement (stroke) to achieve volume

flow of at least 10 times their internal volume. Hydraulic manifolds, blocks, motors, reservoirs, assemblies, and components should be delivered clean according to a specific procedure. If not delivered clean, they must be flushed separately.

e. Cleaning and Flushing Methods. There are a number of cleaning and flushing methods in industry. Some of the more common methods are listed below.

(1) Filtration carts. This is the probably the simplest of the flushing strategies. Because many machines, gearboxes, etc. have no onboard filtration, the use of filter carts and oil reclamation equipment not only can clean the oil (drawing down the contaminant level), but can also remove loosely deposited sludge and sediment.

(2) High turbulence, high fluid velocity, low oil viscosity. The approach involves increasing fluid velocity up to turbulent levels (sometimes two to four times the normal flow rates) and/or reducing oil viscosity during the flush. The Reynolds number should exceed 4000. Typically, a Reynolds number in the range of 4,000 to 6,000 is generally targeted. By circulating hot oil or a flushing fluid through the piping of a system at a very high flow rate, turbulent flow can be achieved that dislodges particles that would otherwise cling to the walls during laminar flow. These particles are then removed from the piping as the fluid is circulated through a series of high efficiency flushing filter elements. Typically, filter elements are replaced throughout the flushing process.

(3) Hot oil flushing. This strategy is similar to the high turbulence and high velocity approach listed above. In addition, it increases oil solvency to aid in the scrubbing of tenacious deposits. Target temperatures range from 175 to 195 °F (79.4 to 90.6 °C). Generally speaking, the required cleanliness level to target during hot oil flushing is half the level during normal operation. For example, if the normal operation level is ISO 15/13/11, flush to an ISO14/12/10. Requirements for cleanliness levels of both solid particles and moisture should be achieved. The coldest part in the flushing loop should have a minimum temperature of 122 °F (50 °C). This can be achieved by using a minimum flushing fluid supply of 140 °F (60 °C). In certain cases, this can be achieved only by insulating certain parts of the loop.

(4) Pulsating oil flow. This involves rapidly changing oil flow rates. This in turn can help dislodge contaminants.

(5) Mechanical cleaning and tools. This tactic is used for wet sumps, gear boxes, and reservoirs that have a convenient access to hatches and clean-out ports. One option is to use a wand or nozzle on the end of a flushing hose to create high velocity oil flow to blast away deposits. Alternatively, a wand can be used like a vacuum that can be effective at picking up bottom sediment on the sump floor. Mechanical cleaning can also involve the use of scrapers, brushes, abrasives, and sometimes an ultrasonic bath. Machine components can also be washed one at a time using a parts-cleaning station and chemicals.

(6) Chemical cleaning. System components can be chemically cleaned. Chemically active cleaning compounds, typically caustics and acids, help remove the most adherent organic and inorganic surface deposits. The oil must first be removed completely from the system. Following the flush, the cleaning chemicals should be thoroughly rinsed from the system. Always consult machine and lubricant suppliers before using chemical flushes.

CHAPTER 7

Oil Monitoring and System Sampling and Testing

7-1. Description.

Oil sampling is the most critical aspect of oil analysis. Failure to obtain a representative oil sample impairs all other oil analysis efforts. Oil sampling and testing can be performed for several different purposes including:

- Purchasing new oil to verify oil properties.
- Testing the health of in-service oil.
- Testing oil after reconditioning such as filtration or dehydration.

a. The most common application is testing in-service oil. Oil monitoring serves as a maintenance tool to not only check the condition of the oil, but the condition of the machinery. It can be used as a way to prevent failures, or sometimes as a way to do a failure analysis. This chapter is intended for hydraulic oil, lubricating oil, compressors, engines (e.g., Figure 7-1), gear oil, and turbine oil. This chapter does not cover transformers since they require insulating (not lubricating) oil.

Figure 7-1. Diesel Engine for Pump Drive.

b. For turbine oils, the general requirements for testing in ASTM D4378, “In-Service Monitoring of Mineral Turbine Oils for Steam, Gas, and Combined Cycle Turbines,” are a good starting point. However, there is some tailoring that is needed to make it more suitable for hydro applications. ASTM D6224, “In-Service Monitoring of Lubricating Oil for Auxiliary Power Plant Equipment,” provides useful guidance for auxiliary systems including hydraulic systems, compressors, engines, and gears (e.g., Figure 7-2).

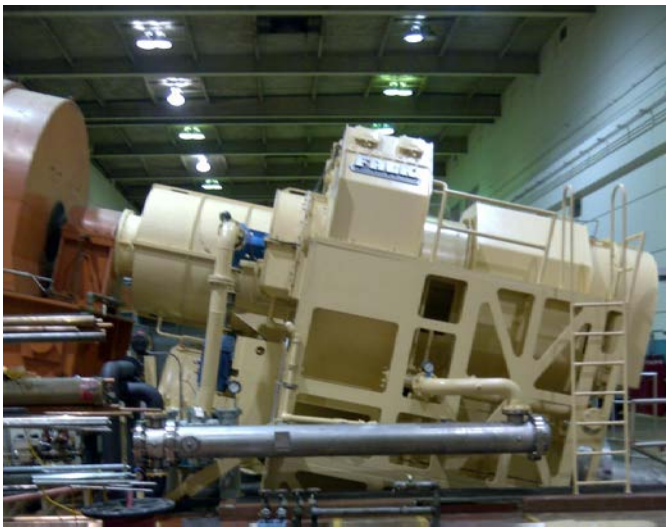

Figure 7-2. Gear Box (2:33,800 hp)

7-2. Guidelines for When to Sample.

All USACE facilities, including navigation sites, field sites, and hydropower sites, shall establish an oil sampling and testing program for their equipment. This chapter provides some guidelines on sampling frequency and testing requirements. Establishing an appropriate sampling frequency depends on several factors:

- Is a predictive or proactive strategy being used?
- What is the age of the machine?
- What is the age of the oil?
- What are the consequences of failure?
- How severe is the environment and what is the life expectancy of the lubricant?
- Has there been a history of oil related issues?

a. There is no one correct answer that applies to all systems. Most users will probably want a more simplified answer to this question. In ASTM D6224, the default recommended frequency for most types of industrial systems is 3 months. For civil works features such as locks and dams, a minimum sampling frequency of once per year should be established. On certain systems, where more information about the system is available, this sampling frequency can be refined.

b. One example would be turbine oil. Each subsystem, the bearings, the governor, and the turbine have its own unique characteristics. As far as oxidation, the thrust bearing has the most severe environment. However, if excessive foam is passing through the pumps, there can be more oxidation occurring in the governor system. For each of these systems, a once per year sampling is recommended. Life expectancy of the lubricant in this application is 20 to 40 yrs. On a system with more extreme operating conditions, the rate of change of properties will be faster, and the sampling frequency must be more frequent.

c. Enclosed Gear Boxes. AGMA 9005-E02, Annex E and F, provides some guidance for gear boxes or gear reducers. The higher the operating speed, the more often sampling and testing should be performed. Sump/splash lubricated gear drives many times do not have a filtration system. In these cases, the lubricant may need to be changed on a time scheduled basis to minimize the presence of particulate and/or water contamination. Routine oil sampling and condition analysis, when practical, are beneficial for all enclosed gear drives. The oil should be replaced when its degradation or level of contamination exceeds predetermined limits.

7-3. How To Sample. The sample(s) taken must be representative of the oil in the system. The procedures must ensure that samples can be taken without adding contaminants to the sample. Consistent sampling procedures are necessary for consistent repeatable results. Oil samples should be collected when the machine is running under normal conditions. This ensures that insoluble material is suspended evenly throughout the system. Contact the lab to determine the volume of sample that they need. The information below summarizes sampling methods. For more detailed information, consult ASTM D4057-2006, "Standard Practice for Manual Sampling of Petroleum and Petroleum Products."

a. Oil Sample Bottles. Samples should be taken in a suitable sample bottle. To be suitable, the bottle must be clean. Visual inspection should verify that there is no contamination. If there is any doubt, flush the bottle with the sample fluid. Normally, the best solution is to obtain sample bottles from the test lab. The lab can supply "Clean" bottles that contain less than 100 particles (>10µ) per milliliter of bottle volume. "Super Clean" bottles contain less than 10 particles (>10µ) per milliliter of bottle volume. "Ultra Clean" bottles contain less than one particle (>10µ) per milliliter of bottle volume. The bottle must have chemical resistance to the fluid being sampled. Bottles and packaging must be suitable for the shipping and handling method used. The bottle volume must be adequate for the tests performed. It is best to verify required volume with the lab beforehand.

b. Sample Labels. A sample bottle must be properly labeled for identification. The equipment must be identified uniquely. Labels should contain at least the following minimum information: Customer name, location, machine identification, date, type of oil, sampling location.

c. Sampling of New Oil Deliveries. A sample of the new lubricant is required to establish conformance with the contract and to establish a baseline for new oil properties. Samples must accurately represent the in-service oil, not tank low spots or other anomalies that may have radically different test results. New oil might be delivered in drums, totes, or tankers. Inspection of the drums, totes, or tankers may be necessary to determine whether one sample or multiple samples from the shipment are necessary. If contamination is suspected, it may be necessary to sample from all the containers or all of the compartments from the tanker, or at different points of pumping out the full tank. For tankers especially, flush the sampling port adequately to ensure a representative sample. Different compartments of the tank may have contained different fluids or may have received different levels of cleaning.

d. Proper oil sampling is critical to an effective oil analysis program. Without a representative sample, further oil analysis endeavors are futile. There are two primary goals in obtaining a representative oil sample. The first goal is to maximize data density. The sample

should be taken in a way that ensures that there is as much information per milliliter of oil as possible. This includes criteria such as cleanliness and dryness of the oil, depletion of additives, and the presence of wear particles being generated by the machine. The second goal is to minimize data disturbance. The sample should be extracted so that the concentration of information is uniform, consistent, and representative. It is important to make sure that the sample does not become contaminated during the sampling process. This can distort and disturb the data, making it difficult to distinguish what was originally in the oil from what came into the oil during the sampling process.

7-4. Where to Sample. Sampling ports should be located downstream of the components that wear and away from areas where particles and moisture ingress. Return lines and drain lines heading back to the tank offer the most representative levels of wear debris and contaminants. Once the fluid reaches the tank, the information becomes diluted.

a. Filters and separators remove contaminants. Therefore, they can remove valuable data from the oil sample. Sampling valves should be located upstream of filters, separators, dehydrators, and settling tanks unless the performance of the filter is being specifically evaluated.

b. In drain lines where fluids are mixed with air, sampling valves should be located where oil will travel and collect (Figure 7-3). On horizontal piping, this will be on the underside of the pipe. Sometimes oil traps, like goose necks, must be installed to concentrate the oil in the area of the sampling port. Circulating systems where there are specific return lines or drain lines back to a reservoir are the best choice for sampling valves. The best way to ensure that the fluids are turbulent and mixed is to sample from elbows instead of straight lengths of pipe. The best sampling locations are highly turbulent areas where the oil is not flowing in a straight line, but is turning and rolling in the pipe.

Courtesy of Noria Corporation and *Machine Lubrication* Magazine.

Figure 7-3. Sample Valve in an Ideal Location.

c. Sampling Location. The primary sampling port is the location where routine oil samples are taken for monitoring oil contamination, wear debris, and the chemical and physical properties of the oil. Possible locations include:

(1) Dipping from the tank. Oil samples can be taken by dipping from the tank. Lubricant should be thoroughly circulated before the sample is taken. All sample components must be absolutely clean for this method to minimize risk of sample contamination. Avoid the bottom and

surface of the tank. An ideal location is near the return line. An acceptable location is near the suction line or in the mid-elevations of the tank.

(2) Oil return line sampling port. For circulating systems, the preferred location for oil samples is on a single return line before entering the sump or reservoir. Flushing of the port is critical and sufficient flushing must be done to ensure that contamination in the port is removed.

d. Sampling from high pressure lines. Sampling from high pressure lines should be done using a Minimess sampling valve (Figure 7-4). Taking a sample from a high pressure hydraulic system requires the use of tools that ensure the safety of the technician drawing the sample. Pressure-reducing valves are widely used to reduce the system pressure to a safe level for drawing an oil sample. These valves are used in association with standard sampling accessories. Typically, a short micro-bore hose (2 mm nominal bore size) connects the sample port to the handheld pressure-reducing valve. The pressure-reducing valve then reduces the pressure from up to 5000 psig to an acceptable output pressure as low as 50 psig. A sample port adapter and clean sample tube are then attached to the outlet of the pressure-reducing valve.

Figure 7-4. Minimess sample Valve.

e. Secondary Sampling Methods. These are to be used for measuring contamination and wear debris contributed by individual components, and can be located anywhere on the system to isolate upstream components. Contamination and wear debris contributed by individual components will be found by:

(1) Sampling from a Line. The line should contain lubricating oil that is free flowing and not deadheaded. For instance, the lines in a bearing header, an active filter, and active heat exchanger are free flowing; the lines to a gauge cabinet are deadheaded. In equipment with dual filters or heat exchangers, the inactive filters or heat exchangers do not have flowing fluid and are not suitable

sampling points. When using a sampling line, it is necessary that the line has been thoroughly flushed before taking a sample. Adequate amount of flushing will depend on sampling line dimensions, length, and diameter. Test values obtained will differ depending on the sample locations. Use caution when comparing sample results from different sample points. Samples should be taken in the same manner each time to allow reliable trending of oil properties.

(2) Tapping from a reservoir. The lubricating oil must be thoroughly agitated in the reservoir and the tap line flushed before a sample can be taken.

f. An oil sample is probably not representative if: (1) the system oil is hot while the sample is cold, (2) the oil in the system is one color or clarity in a sight glass while the sample is a different color or clarity, and (3) the viscosity of the reservoir oil is different from that of the sample when both are at the same temperature. Note that, on occasion, a sample may be requested that will not be representative. At that time, sampling instructions, as specified by the requestor, must be followed. For example, a sample might be taken off the top or the bottom of a tank to check for contamination. In all cases, the sample point should be marked on the sample bottle.

7-5. Test Requirements. The tests to be performed depend on the application. Table 7-1 lists recommended tests for equipment common in civil works. Adjustments can be made based on the specific application. It is also acceptable to follow the guidance of ASTM D6224 for tests to be performed.

Table 7-1. Test Requirements.

Requirement	**Standard**
Gear oils. Also see AGMA 9005-E02 for further requirements	
Spectrochemical by ICP	ASTM D5185
Viscosity at 104 and 212 °F (40 and 100 °C)	ASTM D445
Water by Karl Fischer	ASTM D6304
Total Acid Number	ASTM D664
Oxidation Stability (EP oils)	ASTM D2893
Air Compressors	
Spectrochemical by ICP	ASTM D5185
Water by Karl Fischer	ASTM D6304
Viscosity at 104 and 212 °F (40 and 100 °C)	ASTM D445
Total Acid Number	ASTM D664
Grease	
Oxidation Stability	ASTM D942
Apparent Viscosity	ASTM D1092

Requirement	**Standard**
Extreme Pressure Properties (4 ball method)	ASTM D2596
Spectrochemical by ICP	ASTM D5185
Hydraulic Oil	
Spectrochemical by ICP	ASTM D5185
Water by Karl Fischer	ASTM D6304
Viscosity	ASTM D445
Total Acid Number	ASTM D664
Particle Count	ISO D4406
Infrared Spectrometry	ASTM E2412
Hydro turbine oils	
Viscosity Measurement at 104 and 212 °F (40 and 100 °C)	ASTM D445
Total Acid Number	ASTM D664
Spectrochemical by ICP	ASTM D5185
Particle Count	ISO 4406
Water by Karl Fischer	ASTM D6304
Viscosity Index (Calculated)	ASTM D2270
Foaming Characteristics	ASTM D892
Water Separability of Oils @ 129 °F (54 °C)	ASTM D1401
Rust Preventive Characteristics	ASTM D665
Copper Corrosion by Copper Strip	ASTM D130
Oxidation Stability (Rotating Pressure Vessel Oxidation Test [RPVOT])	ASTM D2272
Oil compatibility testing (if adding or replacing oil) (See Figure 7-5)	ASTM D7155
Diesel Engines	
Spectrochemical by ICP	ASTM D5185
Infrared Spectrometry	ASTM E2412
Viscosity	ASTM D445
Total Base Number	ASTM D974
Gasoline Engines	
Spectrochemical by ICP	ASTM D5185
Infrared Spectrometry	ASTM E2412

Requirement	**Standard**
Viscosity	ASTM D445
Total Base Number	ASTM D974
Transmissions	
Spectrochemical by ICP	ASTM D5185
Water by Karl Fischer	ASTM D6304
Total Acid Number	ASTM D664
Viscosity	ASTM D445
Particle Count	ISO D4406

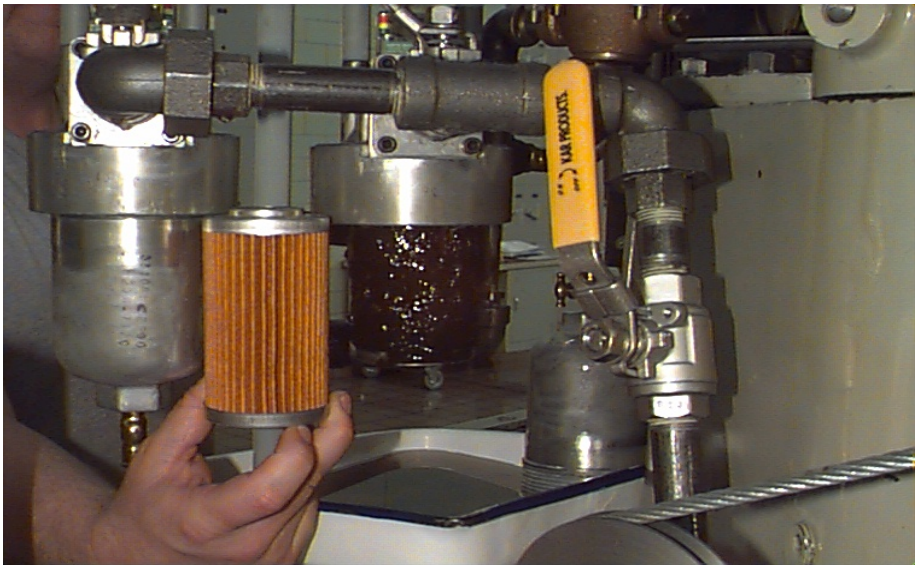

Figure 7-5. Varnish in a System That Resulted When ASTM D7155, "Oil Compatibility Testing," Was Not Performed.

7-6. Test Warning Limits.

a. Viscosity Measurement. It is common for viscosity to increase as the oil ages due to the addition of oxidation products. However, some oils can experience viscosity decreases. A significant change from baseline values is a red flag to look at other properties closely for degradation. Ways viscosity might decrease include, mixing of fuel with oil, electrostatic removal of oxides, shear thinning of VI enhancers, and cracking of lubricant. Ways viscosity can increase include addition of more viscous makeup oil, boiling off of light hydrocarbon fractions (solvents), oxidation, and polymerization. For industrial oils, a + 5% change in viscosity is at the caution level, and a +10% change is at the critical level. For engine oils, a +20% change is critical, +10% change is caution, - 5% is caution, and -10% is critical. For industrial oils, the viscosity should be measured at 104 °F (40 °C). For engine oils, the viscosity should be measured at 212 °F (100 °C).

b. Total Acid Number An acid number greater than 0.2 mg KOH /g is typically at warning level indicating that oil is degraded. An acid number of 0.4 mg KOH/g is considered at the critical limit. Acid number is an indicator of oil health. It is useful in monitoring acid buildup in oils due to depletion of antioxidants. Oil oxidation causes acidic byproducts to form. High acid levels can indicate excessive oil oxidation or depletion of the oil additives and can lead to corrosion of the internal components. By monitoring the acid level, the oil can be changed before any damage occurs. Acid number is measured by titration using ASTM D664 or D974.

c. Particle Count ISO 4406 Achieving better cleanliness will increase equipment life. Warning levels can vary somewhat depending on criticality of the system and expectations of equipment life and reliability. Figure 7-6 shows the general method of how ISO code is determined with particle counts >4µ, >6µ, and >14µ. In the example below, >4µ is 22, >6µ is 18 and >14µ is 13. ISO code is 22/18/13. Table 7-2 lists ISO target cleanliness codes for various equipment. These should be considered warning levels.

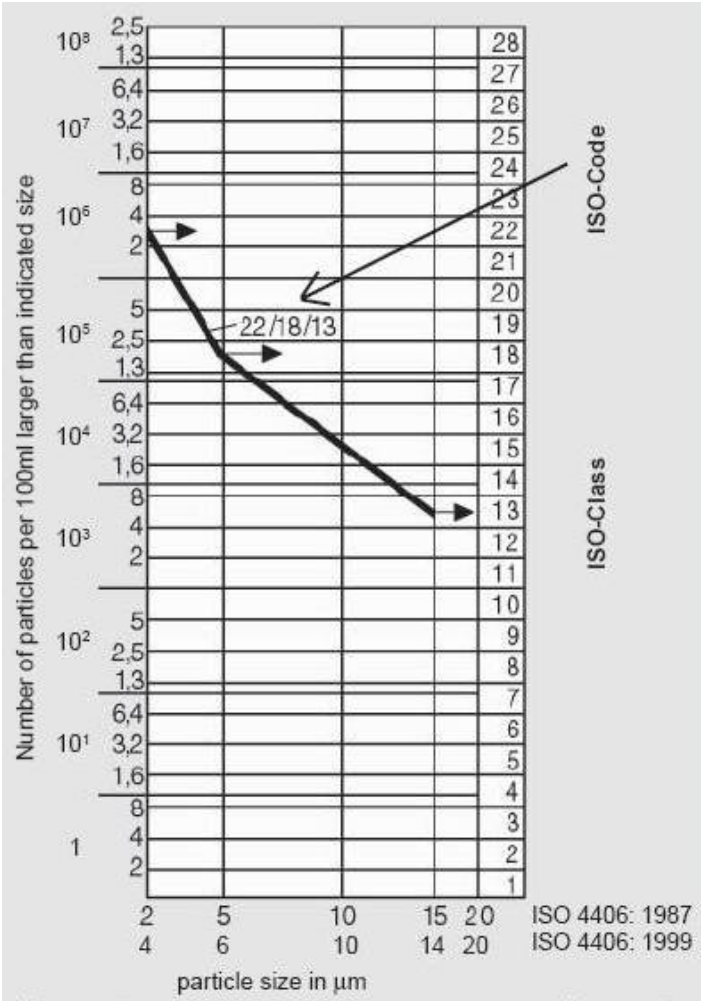

Figure 7-6. ISO Cleanliness Code.

Table 7-2. Recommended ISO 4406 Cleanliness Codes for Equipment and Components.

Pressure	**< 2000 PSI**	**< 3000 PSI**	**> 3000 PSI**
	< 140 Bar	**<210 Bar**	**> 210 Bar**
Pumps			
Fixed Gear	20/18/15	19/17/15	18/16/13
Fixed Vane	20/18/15	19/17/14	18/16/13
Fixed Piston	19/17/15	18/16/14	17/15/13
Variable Vane	19/17/15	18/16/14	17/15/13
Variable Piston	18/16/14	17/15/13	16/14/12
Valves			
Directional (solenoid)	20/18/15	19/17/14	
Pressure (modulating)	19/17/14	19/17/14	
Flow Controls (standard)	19/17/14	19/17/14	
Check Valves	20/18/15	20/18/15	
Cartridge Valves	20/18/15	19/17/14	
Screw-in Valves	18/16/13	17/15/12	
Prefill Valves	20/18/15	19/17/14	
Load-sensing Directional Valves	18/16/14	17/15/13	
Hydraulic Remote Controls	18/16/13	17/15/12	
Proportional Directional (throttle) Valves	18/16/13	17/15/12*	
Proportional Pressure Controls	18/16/13	17/15/12*	
Proportional Cartridge Valves	18/16/13	17/15/12*	
Proportional Screw-in Valves	18/16/13	17/15/12	
Servo Valves	16/14/11*	15/13/10*	
Actuators			
Cylinders	20/18/15	20/18/15	20/18/15
Vane Motors	20/18/15	19/17/14	18/16/13
Axial Piston Motors	19/17/14	18/16/13	17/15/12
Gear Motors	21/19/17	20/18/15	19/17/14
Radial Piston Motors	20/18/14	19/17/15	18/16/13
Swashplate Design Motors	18/16/14	17/15/13	16/14/12

Pressure	**< 2000 PSI**	**< 3000 PSI**	**> 3000 PSI**
	< 140 Bar	**<210 Bar**	**> 210 Bar**
Bearings			
Ball Bearing Systems	15/13/11*		
Roller Bearing Systems	16/14/12*		
Journal Bearings (high speed)	17/15/13	>400 RPM	
Journal Bearings (low speed)	18/16/14	<400 RPM	
General Industrial Gearboxes	17/15/13		
Turbines			
Hydro Turbines digital governor	15/13/10		
Hydro Turbines mechanical governor (recommended to minimize problems with current oils)	17/15/12		
Hydro Turbine bearing sumps	17/15/12		

a. Table 7-3 lists requirements for new turbine oil properties and the corresponding test standard.

b. Water in Petroleum Products ASTM D6304. Generally speaking, water content below 100 ppm is considered good. Vacuum dehydration systems can achieve much better results, but most systems use these only when oil is added into the machine. Water levels beyond 250 ppm are at a warning level. Water levels beyond 400 ppm to 500 ppm are critical. A simple crackle test can be used to determine if water is present in oil. A small volume of the lubricant is dropped onto a hot plate and, if bubbles or crackles occur, water is present. If a crackle test is positive, further testing is needed to quantify the amount of water by using Karl Fischer titration by ASTM D6304. A measured amount of oil is introduced into a titration chamber. This solution is titrated with Karl Fischer reagent to a specific endpoint. The amount of reagent used and the sample volume are calculated and converted to ppm or percent by mass.

c. Viscosity Index (Calculated) ASTM D2270. It is common for viscosity index to decrease with age and oil shear. A significant decrease from baseline values is a red flag. Look at other properties closely for degradation.

Table 7-3. New Turbine Oil Properties.

Chemical and Physical Characteristics	**Requirements ISO 68 Oil**	**Requirements ISO 100 Oil**	**Test Method**
Viscosity at 40 °C, centistokes (cSt)	64 – 70	95 – 102	ASTM D445
Viscosity Index, minimum	98	95	ASTM D2270
Flash Point, minimum, °C (°F)	204 (400)	210 (410)	ASTM D92

Chemical and Physical Characteristics	Requirements ISO 68 Oil	Requirements ISO 100 Oil	Test Method
Pour Point, maximum, °C (°F)	-9 (16)	-9 (16)	ASTM D97
Acid Number (AN) mg KOH/g, maximum	0.1	0.1	ASTM D664
Oxidation Stability by Rotating Pressure Vessel Oxidation Test (RPVOT), minutes, minimum	750	750	ASTM D2272
Rust Preventive Characteristics, Procedures "A" and "B"	Pass	Pass	ASTM D665
Water Content, parts per million (ppm), max	250	250	ASTM D6304
Water Separability of Petroleum Oil	40-40-0 (30)	40-40-0 (60)	ASTM D1401
Corrosion from Oil by Copper Strip Tarnish Test	Classification 1	Classification 1	ASTM D130
Foaming characteristics After 5 minutes blowing period:			ASTM D892 (Option "A" excluded)
Sequence 1, foam volume in ml, maximum	50	50	
Sequence 2, foam volume in ml, maximum	10	10	
Sequence 3, foam volume in ml, maximum	50	50	
Foaming characteristics After 10 minutes settling period:			
Sequence 1, foam volume in ml, maximum	0	0	
Sequence 2, foam volume in ml, maximum	0	0	
Sequence 3, foam volume in ml, maximum	0	0	
Air Release Properties, minutes, max.	30	60	ASTM D3427
Cleanliness, ISO Code Particle Count, particle sizes of greater than 4, 6, and 14 m (c)	17/15/12©	17/15/12©	ISO 4406 (ISO 11171)
Appearance	Clear and Bright	Clear and Bright	Visual Observation
Note: This table is for reference to show the typical new properties for hydro turbine oils.			

d. Foaming Characteristics ASTM D892. For a blowing period, a value greater than 50 ml, after 10 minutes settling is at the warning limit. Foaming will not result in short term failures, but if levels are higher, problems with oil degradation and operation will occur (Figure 7-7). It is generally not practical to keep adding antifoam additive. The critical level will be at a level greater than 50 ml and system operation is severely compromised and oil replacement would be needed. Some issues to check and address to mitigate foaming are: Leaking Pump Suction, Improper Returns to Reservoir, and Pump Cycle Time. It is important to note that water, oxidation, and contamination can all damage the antifoaming properties.

e. Water Separability of Oils @ 129 °F (54 °C) ASTM D1401. The warning level is 40-40-0 (30) Oil, Water, Emulsion (minutes). The first number is the thickness of the oil layer, the second is thickness of water layer, the third is thickness of emulsion layer, and the fourth is the time in minutes. The criticality of the numbers depends on the measured water content of the oil. In general, it is desirable to procure oil that readily separates and leaves no emulsion. Otherwise, it will become difficult to remove water completely from the system and there will be effects on other additives such as foaming characteristics.

Figure 7-7. Extreme Foaming in the Sump of a System in which ASTM D892 Antifoaming Properties Were Not Adequate.

f. Rust Preventive Characteristics ASTM D665. Using Procedure A with distilled water, and Procedure B with sea water, if any rust spot or rust streak is visible, confirmed by pits or roughness, the result is “fail.” This would be considered the warning limit as well.

g. Copper Corrosion by Copper Strip ASTM D130. This is a measure of copper corrosion in the presence of the oil due to sulfur compounds. A level of 2 or higher would be a warning limit.

- Level 1: slight tarnish or discoloration - a. Light orange b. Dark orange.
- Level 2: moderate tarnish - a. Claret red b. Lavender c. Multicolored with lavender blue or silver, or both, overlaid on claret red d. Silvery e. Brassy or gold.
- Level 3: dark tarnish - a. Magenta overcast b. Multicolored with red and green but no gray.
- Level 4: corrosion - a. Transparent black, dark gray or brown with peacock green barely showing b. Graphite or lusterless black c. Glossy or jet black.

h. Oxidation Stability (RPVOT) ASTM D2272. New oil should have a specified RPVOT of at least 750 minutes. It would be very valuable to know the baseline value of RPVOT for the specific oil in use. When the value drops to 25% of the original value, it is considered critical. The oil needs to be replaced. Due to the nature of how oxidation progresses, there is almost no usable life remaining in the oil. Anything approaching 25% of the original value is considered a warning limit.

i. Spectrochemical by ICP ASTM D5185. The test determines the concentration in ppm of elements in the oil including wear metals, contaminants, and additive metals. Wear metals include iron, aluminum, chromium, copper, lead, tin, nickel, silver, and vanadium. Contaminants contain silicon, sodium, and boron. Additive metals include zinc, phosphorous, calcium, barium,

magnesium, cadmium, manganese, and titanium. For this test, trending is typically essential to track developing problems. If a baseline for the particular fluid is unknown, it is suggested that a sample of new oil be tested as well to establish what is “normal.” In most cases, there will also be some guidance from the lab when concentrations exceed normal or acceptable levels. Spectrochemical analysis detects concentration of small particles. It is most accurate for particles less than 1 micron. For particles greater than 7 microns, accuracy decreases substantially.

j. Infrared Spectrometry (also Fourier Transform Infrared [FTIR] Spectrometry) ASTM E2412. This test is used to determine % fuel dilution, soot, oxidation, sulfination, nitration, and glycol. Fuel dilution can help diagnose problems such as leaking injectors, fittings, seals, or combustion characteristics. Testing for soot is helpful in determining if there is excessive blow by. Oxidation measures the amount of infrared light absorbed by oxidation products; this measure helps to determine usable life left in the oil. Sulfination measures the amount of infrared light absorbed by harmful sulfur compounds. Nitration measures the amount of infrared light absorbed by harmful nitrogen compounds. Glycol indicates coolant leaks into the oil such as those that would occur with a head gasket leak.

k. Total Base Number ASTM D974. This is a measure of the total reserve alkalinity in the oils additive package. Since combustion products are acidic, the reserve alkalinity is needed to accommodate for the acidity. Base numbers for new oil may range from about 5 to 12. Typically, when the base number has reached 50% of the original value, it is time to replace the oil. The rate of change increases as base number drops so at 50%, there is very little life left in the oil. If the original base number is not known, a sample of new oil should be tested to establish the baseline.

l. Oxidation Stability ASTM D942. This test is for oxidation stability of greases. The test apparatus is different from RPVOT used for oil, but interpretation of the results is similar. The original value of oxidation stability should be known. If it is unknown, a sample of new grease and used grease can be tested. When the value of oxidation stability, in hours, drops below 25% of the original value the grease has expended its useful life.

m. Apparent Viscosity ASTM D1092. Greases are non-Newtonian fluids, in which viscosity increases with load so typical viscosity measurements will not work with them. This test measures the apparent thickness of the grease and helps determine whether it has broken down. It is necessary to know the original value of this property for the grease, but if this is not available, perform the test on both an old and new sample.

n. Extreme Pressure Properties (four-ball method) ASTM D2596. This test measures the scar diameter versus applied load. It is useful for determining the extreme pressure properties of EP greases. It is important to know the original properties of the grease. If this is not available, perform the test on both an old and new sample.

7-7. Oil Monitoring Program.

a. The oil monitoring program should evaluate, track, and trend oil test data. The program should establish baseline data, especially on the following tests:

- Viscosity.
- Sufficiency of additives.
- Water content.
- Acidity.
- Oxidation stability.
- Trace metals content.

b. The program should set "warning" and "critical" limits. Test reporting and tracking software is available for assistance in managing the information. Some oil laboratories offer web-accessible programs and commercially designed web-based fee-for-service software is also available. More detailed guidance for oil monitoring for a variety of equipment, pumps, compressors, gears, diesel engines, electrohydraulic controls, and others is shown in ASTM D6224, "Standard Practice for In-Service Monitoring of Lubricating Oil for Auxiliary Power Plant Equipment."

7-8. Laboratories.

a. Use of reputable laboratories is critical to success. This can be a challenge in the contracting environment. Many tests are inexpensive enough that a contract is not required. Once the trusted lab is found, it is highly preferred that the same lab be used for ongoing testing. It is still acceptable to use multiple laboratories as long as results are verified. One verification method is to send identical samples to two or more laboratories for testing. Other individuals or organizations with applicable experience may provide references to qualified laboratories.

b. It is possible to require the lab to prove proficiency through ASTM's Hydraulic Fluids and Oils Proficiency Testing Program. For spectroscopy, it is possible to require the lab to calibrate according to ASTM D7578, "Standard Guide for Calibration Requirements for Elemental Analysis of Petroleum Products and Lubricants." The ASTM D7155 Compatibility Test can present difficulties for laboratories that do not regularly perform the test. Since it is most commonly used for hydro turbines, it is not widely used by industry. Check with other references to help determine qualified laboratories for this test.

c. Test Reports and Interpretation. Competent laboratories issue a written test report with each laboratory test. Although formats may vary, a typical lab report includes acceptable limits and interpretation of results.

THIS PAGE INTENTIONALLY LEFT BLANK

CHAPTER 8

Oil Storage, Handling, Disposal, and Safety

8-1. Lubricant Storage. Lubricants are frequently purchased in large quantities and must be safely stored. The amount of material stored should be minimized to reduce the potential for contamination, deterioration, and health and explosion hazards associated with lubricant storage. Table 8-1 lists some causes of lubricant deterioration and prevention during storage. Additional information may be found in MIL-STD-3004C w/Change 1, Department of Defense (DoD) Standard Practice, "Quality Assurance/Surveillance for Fuels, Lubricants and Related Products" available from https://assist.dla.mil. MIL-STD-3004C details DoD recommendations on storage, shelf life, stock rotation, sampling, and storage stability of lubricants and packaged petroleum products. Chapter 16 also provides information regarding storage of lubricated mechanical equipment. All storage and handling of lubricants shall follow EM 385-1-1, *USACE Safety and Health Requirements*, 30 November 2014.

8-2. Storage and Degradation of Lubricants. Several considerations for lubricant storage to reduce degradation and contamination are discussed below, including temperature, moisture, and the storage environment. Lubricants need to be kept clean and dry to reduce contamination. All lubricants should be properly labeled and stored to prevent cross contamination and to ensure that the proper lubricant is used on the correct machinery.

a. Temperature. Lubricants should be stored at a constant, moderate temperature that is within the manufacturer designated range for the particular lubricant type. Generally speaking, lubricants should be stored between 32 and 68 °F (0 and 20 °C). Widely varying temperatures can expand and contract container seams causing leakage. Storage at extreme temperatures can cause separation of chemical elements and change the nature of the lubricant. Lubricants should be stored away from extreme heat sources that could cause fire or explosion. It is important to document the manufacturer specified storage temperature for each lubricant. Water-based lubricants and some fire resistant hydraulic oils cannot be allowed to freeze.

b. Moisture. Lubricants should be stored such that moisture cannot enter the storage container. Moisture causes oxidation of the lubricant's base oil and chemically degrades additives. Water contamination changes viscosity and reduces lubricant effectiveness, which leads to equipment wear, corrosion, and eventual failure.

c. Storage Environment. Lubricant should be stored indoors if possible where humidity can be kept to a minimum. Oils will naturally absorb moisture when exposed to humid air. If lubricant drums must be stored outdoors, they should be under shelter and covered with tarpaulin or a convex lid. Ensure that bungs are tight when drum is not being poured or filled. Drums should be stored on their side such that the bungs are at 3 o'clock and 9 o'clock positions to prevent water accumulation around the bungs. Wipe and dry drums before removing bungs. Drums should be stored off the ground. Ideally, storage racks should be used.

Table 8-1. Causes of Lubricant Deterioration and Their Prevention.

Cause	**Components Affected**	**Effect**	**Prevention**
ATMOSPHERIC			
Oxygen	• Lubricants.	• Forms gums, resins, and acidic products with viscosity increase.	• Use lubricant containing anti-oxidation additive. • Keep in sealed containers.
	• Engines and components.	• When moisture is present, causes corrosion, particularly to ferrous components.	• Coat with lubricant or temporary protective. • Wrap in airtight packages using vapor phase inhibitors. • In sealed units, include desiccants.
	• Cables and wires.	• Corrosion in the presence of water.	• Coat with lubricant
	• Seals.	• Promotes slow cracking of natural rubber and some similar materials. • Negligible normally at ambient temperatures.	• Use of different polymer. • Do not store in hot place.
Pollutants			
(e.g., sulfur dioxide, hydrogen sulfide)	• Engines and components. • Cables and wires. • Brakes and clutches.	• Rapid corrosion of most metals.	• Store in sealed containers. • Coat metals with temporary protective or lubricant. • Filter air supply to remove pollutants.
Dust and Dirt	• Lubricants.	• Increased wear between bearing surfaces.	• Keep covered or in containers.
	• Engines and components. • Cables and wires. • Brakes and clutches.	• Increased rate of wear between bearing surfaces. • Promote corrosion in the presence of moisture.	• Keep covered or in containers.

Cause	Components Affected	Effect	Prevention
TEMPERATURE			
Heat	• Lubricants.	• Increases rate of deterioration as under "Oxygen." • Will increase oil separation from greases.	• Keep stored temperature no higher than 68 °F (20 °C).
	• Seals.	• Increases deterioration rate as above.	
Cold	• Lubricants.	• In water-containing materials (e.g., cutting oils and certain fire-resisting hydraulic oils) water could separate out.	• Keep temperature above freezing point.
HUMIDITY			
	• Seals.	• Could become brittle.	
	• Engines and components. • Cables and wires.	• Promotes corrosion. • More severe when ferrous and nonferrous metals present. See "Oxygen."	• Coat metal parts with lubricant or temporary protective.
	• Brakes and clutches. • Belts, ropes, seals.	• Promotes fungus/bacterial growth.	• Store in dry location.
LIGHT			
	• Lubricants.	• Promotes formation of gums, resins, and acidity.	• Store in metal or opaque containers.
FUNGI/BACTERIA			
	• Lubricants.	• Growth occurs at water/oil interface.	• Keep water out of containers. In certain cases, biocides and fungicides can be added.
	• Brakes and clutches. • Belts and ropes, seals.	• Surface covered and attacked by mold growth.	• Store in dry location. Treat with biocide and fungicide.

Cause	Components Affected	Effect	Prevention
VIBRATION			
	• Engines and components	• Ball bearings, and to a lesser extent roller bearings, suffer false brinelling.	• Do not store where there is vibration. • Resilient mountings can reduce effects of vibration.
Reference: Neale, M.J. 1995. *A Tribology Handbook*. Butterworth-Heinemann Ltd., Oxford, England.			

d. Storage Vessel. Lubricant storage vessels need to be dry and airtight to prevent moisture contamination. Seals should be inspected for age, wear, and leakage. Partially filled containers can accumulate moisture in the headspace, which may require the use of a headspace dehumidifier or other means to reduce water infiltration.

e. Desiccant Breathers. The use of a desiccant breather on equipment sumps and reservoirs is recommended in cases of excessive or persistent water contamination. A desiccant breather provides ventilation of the storage vessel without allowing moisture and particulates to enter. Goose neck vents, breather caps, and vent plugs should be replaced with desiccant breathers.

f. Debris and Settlement. Lubricants should be protected against dust and dirt contamination. Particulate contamination can cause significant damage to equipment. Additionally, settlement of oil can affect performance if not properly accounted for. The following should be considered regarding debris and settlement:

(1) Storage environment. It is recommended that lubricant storage vessels be stored in a clean environment, preferably indoors. If they are located in a dusty area, a filter should be installed in the vent line.

(2) Storage vessel. Lubricant should remain in a sealed environment at all times. Ensure that reservoir lids are securely fastened and that seals do not have significant wear, aging, or leakage. If possible, keep drums elevated off the ground to prevent rusting and dust accumulation. Oil should be filtered before entering bulk storage tanks as well as when it is transferred into equipment. Ensure that vessel inlets and outlets are wiped clean to prevent dust accumulation. Lubricant containers should be inspected every 3 months for internal cleanliness, corrosion, and sediment buildup. At least annually, lubricant containers should be checked for damages. Filtered oil tanks should be periodically drained and thoroughly cleaned. Containers should be thoroughly cleaned before reuse.

g. Storage Stability. Some oil formulations will degrade over time. This can be due to settlement of additives. If stored for a long time frame, some formulations may require mixing and retesting before use to determine if the lubricant still meets intended performance levels.

h. Shelf Life. Over prolonged periods of storage, lubricants can break down and lose their performance. The shelf life of lubricants varies widely. The lubricant label or manufacturer

should be consulted for recommended shelf life. As a general rule, oil storage should not exceed 5 yrs; a year or less is preferable. If lubricants are stored for long periods of time, testing should be done on an annual basis. This should include testing for water content. Grease should be stored for no more than 1 year as it may bleed or change consistency over longer storage periods. Stored lubricant stock should be rotated such that the oldest stock is used first. Most lubricants have supplier recommended shelf lives based largely on the lubricant's additive package. For example, lubricants containing rust inhibitors may lose performance after as little as 6 months in storage. Conversely, some turbine fluids with a light additive dose may be shelved for up to 3 yrs. Shelf life information is available from the lubricant supplier and/or manufacturer for each product used. Shelf life is typically based on ideal storage conditions. Most manufacturers provide a recommended storage procedure to maximize lubricant shelf life.

i. Used Oil Storage. Lubricants should be stored according to regulations set by Governmental agencies such as the USEPA, and the Department of Environmental Quality (DEQ). Local laws and regulations can vary and should also be consulted regarding the storage of used oils. As a general rule, used oil should be stored in double-walled containers with water-based, glycol-based, and synthetic oils stored separately from mineral-based oils. Containers should be properly labeled.

8-3. Categories and Applications of Lubrication Storage. The majority of hydroelectric plants use onsite storage facilities for lubricants in particular turbine oils. Lock and dam sites typically store lubricants in drums and containers. For hydroelectric plants, oil is stored in active oil reservoirs, where it is drawn as needed, and in oil drums for replenishing used stock. Each has its own storage requirements. Cleanliness levels and water contamination limits should be established for all oils and lubricants. All new oil should be filtered. At hydroelectric plants, all bulk truckloads of new turbine oil shall be tested for cleanliness and water contamination, and then filtered.

a. Filtered and unfiltered oil tanks. Most hydroelectric power plants use bulk oil storage systems consisting of filtered (clean) and unfiltered (dirty) oil tanks to store the oil for the thrust bearings, guide bearings, and governors (Figure 8-1). Occasionally the filtered oil tank can become contaminated by water condensation, dust, or dirt. To prevent contamination of the bearing or governor oil reservoirs, the filtered oil should be filtered again during transfer to the bearing or governor reservoir. If this is not possible, the oil from the filtered tank should be transferred to the unfiltered oil tank to remove any settled contaminants. The filtered oil storage tank should be periodically drained and thoroughly cleaned. If the area where the storage tanks are located is dusty, a filter should be installed in the vent line. If water contamination is persistent or excessive, a water absorbent filter, such as silica gel, may be required.

b. Oil Drums. If possible, oil drums should be stored indoors. If stored outdoors, oil drums should either be covered or provided with a covered shelter. Oil drums should be stored away from sparks, flames, and extreme heat. The storage location must ensure that the proper temperature, ventilation, and fire protection requirements are maintained. Maintain moderate and constant temperatures when storing indoors. Tight oil drums breathe in response to temperature fluctuations so standing water on the lid may be drawn into the drum as it "inhales." Proper storage is especially important when storing hydraulic fluids due to their hygroscopic nature. To prevent water contamination, place a convex lid over drums stored outdoors. Alternatively, the

drums should be set on their side with the bungs parallel to the ground. Ideally, bungs should be at 9 and 3 o'clock positions to minimize moisture migration and drying out seals. The bungs on the drums should be tightly closed except when oil is being drawn out. If a tap or pump is installed on the drum, the outlet should be wiped clean after drawing oil to prevent dust from collecting. Long term storage should not exceed 5 yrs and desiccant breathers should be installed as the sole source of storage vessel ventilation if used. Storage racks should be used to store drums when possible (Figure 8-2). Storage racks should be designed to fully support drums.

Figure 8-1. Hydroelectric Plant Turbine Oil Storage Tanks.

Figure 8-2. Typical Oil Storage Rack.

c. Tank Trucks. At some facilities and especially hydroelectric plants, these vehicles are used to transfer large quantities of lubricants to remote or isolated equipment. Because of the mobile nature of tank trucks and the variable environmental conditions that they may be exposed to, it is recommended that lubricants not be stored in these vehicles for any length of time longer than needed to execute transfer activities. This will mitigate the risks of contamination due to environmental conditions or faulty equipment such as failed seals or breathers. Additionally, it is during the transfer of fluids that most spills occur and contaminate the surrounding area. Preventive measures consist of protective curbing, spill cleanup kits, and drip pans. Minimizing the time that lubricants are in tank trucks also reduces the risk of oil spills due to failed valves or collisions.

d. Small Containers (Hand Held). Storage of small containers can present challenges. Because they are portable, there is a potential for storage in areas that are not ideal for oil storage due to variable environmental conditions. Small containers should be stored in a designated area with protected from the elements and other contaminants and located within independent containment curbing or equivalent. Small containers should have clear labeling indicating material data, compatibility, and flammability. Small containers should be sorted and stored using these labels.

e. Built-in Piping Systems. Some facilities require transporting oil or hazardous fluids from one location to another location. These systems should be treated like a storage vessel. Annual inspections should be performed to ensure that leaks are detected and that any hazardous material is remediated. Facility piping systems can be complex and can extend over large areas so it may also be necessary to protect features that would allow hazardous materials to enter the environment if a leak occurred. Frequency of use should also be considered. Oil that sits in a piping system for a prolonged period of time is at higher risk of contamination due to environmental conditions. If the oil transfer system is not needed for an extended period, then the oil should be drained back into the oil storage tanks and then flushed again before use.

f. Grease Storage. Because grease fundamentally differs from oil in composition and uses, it also has its own special considerations for storage:

(1) Grease drums and cartridges. Grease should be stored in a tightly sealed container to prevent dust, moisture, or other contamination. Excessive heat may cause the grease to bleed and oxidize. Store grease in clean areas where it will not be exposed to potential contaminants, and away from excessive heat sources such as furnaces or heaters. The characteristics of some greases may change with time. A grease may bleed, change consistency, or pick up contaminants during storage. To reduce the risk of contamination, the amount of grease in storage should not exceed a 1-year supply. Before purchasing grease supplies, the manufacturer or distributor should be consulted for information about the maximum shelf life and other storage requirements for the specific grease

(2) Grease delivery systems. Grease systems, such as automatic delivery systems (Figure 8-3), must also be considered as a type of storage system. Depending on the frequency of grease application, long grease lines may have grease in them for months or even years. These systems can often be exposed to the elements, as is the case for radial spillway gate trunnion bushings, and are subjected to many thermal cycles and periods of high and low humidity. Thus, by the time that the grease is applied to the bushings, it may be heavily degraded. Improvements to grease lines may be

made such as insulation. Another method for preventing negative impacts is, when feasible, to remove the automatic grease system and shorten the grease line. The equipment can then be manually greased via a shorter line guaranteeing that fresh grease is always applied to the equipment.

g. Table 8-1 lists some typical causes of lubrication deterioration and their prevention. The table addresses a number of causes of deterioration from dust and debris, to temperature, humidity, etc.

Figure 8-3. Automatic Grease-Dispensing System for Lock Machinery and Miter Gate Pintle

8-4. Lubricant Handling. When possible, lubricants should be handled in areas that are clean and dry. If this is not possible, measures should be taken to mitigate the exposure of the lubricant to the elements. This can be done by minimizing the amount of time that a lubricant container is open to the amount of time needed for transfer. Another method is to use oil or grease applicators such as grease guns and oil cans with positive locking connections to prevent intrusion by contaminants. Ensure that the connection points are clean before applying the lubricant. A filter cart (Figure 8-4) should always be used to transfer lubricating fluids and oils from barrel to equipment to remove any contaminants that may have entered the barrel while in storage or that came from the oil supply source.

Figure 8-4. Typical Filter Cart.

a. Labeling. Two common consequences of lubricant mismanagement are cross contamination and lubricant confusion. All drums must be clearly labeled and stenciled to ensure proper product identification. Avoid using labeling methods that are not legible or may wear out over time. Take extra care in the labeling of containers that must be stored outdoors since the elements may damage the label. Labeling shall follow 29 CFR 1910.1200 (the revised hazard ommunication standard, 2012). The standard requires workplace labeling in accordance with 1910.1200(f)(6). Each container of lubricant in the workplace shall be labeled, tagged or marked with either the labels provided by the distributor on the shipped containers or product identifier with words, pictures, symbols, or a combination thereof, which provide general information regarding the hazards of the lubricant. Color coding labels simplifies the process and reduces the risk of misapplication. If a color coding system is employed, be sure alpha or numeric information is also present.

b. Dispensing. Lubricant dispensing equipment often lies at the root of cross contamination problems. By dispensing oil through equipment that was previously used with a different lubricant, the two fluids mix, potentially causing lubrication impairment. Equipment such as transport containers, hand pumps, transfer carts, and filter carts should be labeled to match the lubricant to the equipment with which it will be used. Where mixing is unavoidable, verify compatibility in advance with the lubricant supplier. Extend the identification process to the machine's lubricant fill ports. Using identification tags or color-codes helps to ensure that the proper lubricant is added to the reservoir fitted with the proper dispensing tools. If dispensing equipment must be used for a variety of lubricants, employ a proper cleaning or flushing procedure that emphasizes the removal of the previous lubricant and other contamination to minimize risk.

8-5. Safety and Health Hazards. Safety considerations related to lubricants include knowledge of handling and the potential hazards. With this information, the necessary precautions can be addressed to minimize the risk to personnel and equipment.

a. Safety Data Sheets. When handled properly, most lubricants are safe, but when handled improperly, some hazards may exist. Occupational Safety and Health Administration (OSHA) Communication Standard 29 CFR 1910.1200 requires that lubricant distributors provide a Safety

Data Sheet (SDS) at the time lubricants are purchased. The SDS, which provides essential information on the potential hazards associated with a specific lubricant, shall be readily accessible to all personnel responsible for handling lubricants and stored on site. The lubricant's SDS shall provide at least the following information: identification, hazard(s) identification, composition/information on ingredients, first-aid measures, fire-fighting measures, accidental release measures, handling and storage, exposure controls/personal protection, Physical and chemical properties, Stability and reactivity, Toxicological information, Ecological information, Disposal considerations, Transport information, Regulatory information, and Other information, including date of preparation or last revision.

b. Exposure Limits. Contact with lubricants and greases should minimized and only done using the appropriate protective equipment. Lubricants and greases can contain many different hazardous chemicals at various concentrations. An Industrial Hygienist should evaluate each type of lubricant and grease and then provide an exposure limit for each lubricant or grease. Exposure limits established by OSHA or American Conference of Governmental Industrial Hygienists (ACGIH) will be used for evaluations. The most stringent limit shall be used. Health hazards associated with lubricants include:

- Toxicity-Some additives contained in mineral oils may be toxic.
- Dermatitis-May be caused by prolonged contact with neat or soluble cutting oil.
- Acne-Mainly caused by neat cutting and grinding oils.
- Cancer-May be caused by some mineral oil constituents.

c. Personal Protective Equipment. Before handling grease or lubricants, gloves or barrier creams should be used to protect exposed skin. Overalls or other protective clothing should be worn to protect any areas of exposed skin. Equipment and surrounding areas should be cleaned after the work is complete. Contaminated disposable protective equipment should be processed per local regulation.

d. Hygiene. Work area cleanliness is important to reduce the risk of exposure, contamination, and injury. After oil-handling activities are complete, oil contaminated surfaces, tools, and equipment should be cleaned to remove oil or grease that could be easily transferred. Personnel should follow the procedures established by their local safety office and practice good hygiene for oil removal from skin and clothing to prevent prolonged exposure or contamination of off-duty clothing.

e. Safety Equipment for Facilities. Oil storage and handling areas should contain:

- Fire Extinguisher.
- Oil absorbent rags.
- Oil contaminated rag disposal container. (Only approved fire resistant containers should be used for oily rags.)
- Double-walled containment for used oil storage.
- Adequate Ventilation.

- Filter cart and associated oil transfer equipment.
- Adequate signage, labels, and Workplace Hazardous Information Sheets.

f. Service Contractors. Entities that are contracted for service by the Government shall be provided references deemed appropriate by the Contracting Officer. Contractors under contract shall abide by Federal regulations for workplace safety. Each project site's safety personnel should be involved with development of the contract requirements regarding oil-handling activities to ensure that the Contractor complies with project-specific requirements.

g. Fire and Explosion. Although lubricating oils are not highly flammable, there are many documented cases of fires and explosions. The risk of an explosion depends on the spontaneous ignition conditions for the oil vapors. These conditions can be produced when oils are contained in enclosures such as crankcases, reciprocating compressors, and large gear boxes. The flash point of most lubricants is above 390 °F (200 °C). Solvents, however, can be much lower than this. Additionally, pressure relief devices, such as the ones found on electrical transformers, can increase the risk of explosion during a fire. Older style pressure relief valves are typically located on top of the transformer and vent in a 360-degree pattern. If a fire occurs at or near the transformer causing the pressure relief valve to vent, atomized oil can be sprayed directly onto the flame and cause an explosion. For this reason, directional pressure valves are recommended to be used to direct the oil down and away from the ignition source and into secondary containment. If the oil catches on fire, it will be much less dangerous as a burning pool of oil than as a cloud of explosive atomized oil.

h. Hydraulic fluids. Hydraulic systems are susceptible to explosion hazards. A leaking hose under high pressure can atomize hydraulic fluid, which can ignite if it contacts a hot surface. Use of fire resistant hydraulic fluids significantly reduces the risk of an explosion. Use of water-based hydraulic fluids can prevent ignition by forming a steam blanket at the hot spot or ignition source. Synthetic fluids are generally less flammable than mineral oils. Under normal circumstances, synthetic fluid will not support combustion once the ignition source has been removed. Refer to Chapter 10, which summarizes the properties of water-based and synthetic hydraulic fluids and notes special precautions that must be taken when they are used.

i. Fire Safety Requirements. Lubricant storage sites located within government facilities have specialized fire safety requirements. A fire safety engineer should annually evaluate each location to ensure the fire protection systems are adequate and safe to use with the stored materials per National Fire Protection Association (NFPA) 30 or 30A. The Unified Facilities Criteria (UFC) 3-600-01, Fire Protection Engineering for Facilities, also provides guidance. Other standards may be applicable as determined by a qualified fire protection engineer. Typical fire suppression methods are listed below however each system may vary depending on the types of lubricants stored:

- Overhead Sprinkler System.
- Dry chemical fixed extinguishing systems.
- Gaseous agent fixed extinguishing systems.

j. Fire Resistant Hydraulic Fluids. During the design of new equipment, designers should consider fire resistant hydraulic fluides when feasible. Use care when retrofitting existing systems as a new working fluid can generate additional maintenance issues. See Chapter 10 for more information on flame resistant hydraulic fluids.

8-6. Environmental Regulations. Legislation passed by Congress is termed an Act of Congress. The responsibility for developing rules or regulations to implement the requirements of the Acts is given to various agencies of the Federal Government such as the USEPA. The proposed regulations developed by these agencies are published daily in the Federal Register. After publication, the public is permitted to review and comment on the proposed regulations. All comments are evaluated after the specified review time (30 days, 60 days, etc.) has passed. The comments may or may not result in changes to the proposed regulations, which are published in the Federal Register as the final rules.

a. The final rules from the Federal Register are compiled annually in the Code of Federal Regulations (CFR). The CFR is divided into 50 titles, numbered 1 through 50, which represent broad areas subject to Federal regulation. Title 40, "Protection of the Environment" contains regulations for the protecting the environment from contamination. References to the CFR are made throughout this subchapter. Copies of the CFR are not appended to this manual, but can be obtained from the Superintendent of Documents, U.S. Government Printing Office, Washington, DC 20402. The Government Printing Office can be accessed online at http://www.gpo.gov/. The CFR can also be accessed at http://www.ecfr.gov.

b. The general format for identifying a specific regulation in the CFR involves the use of a combination of numbers and letters. For example, 40 CFR 112.20, "Facility Response Plans," indicates that the regulation is found in Title 40 of the CFR. It is further identified as Part 112. A part covers a specific regulatory area, and can range in length from a few sentences to hundreds of pages. The number 20 that follows the decimal point indicates a given section where the specific information is found. A section also may range in length from a few sentences to many pages. Although not shown in this example, the section number may be followed by a series of letters and numbers in parentheses to further identify individual paragraphs.

c. The regulations discussed in this subchapter are current at the time (2014) of writing. However, new regulations are being proposed and promulgated continuously. In addition, state or local regulations may be more restrictive than the Federal regulations, and must be reviewed carefully.

d. Water Quality Regulations. The USEPA has developed water pollution regulations under legal authority of the Federal Water Pollution Control Act, also known as the Clean Water Act. These regulations are found in 40 CFR Subchapter D, "Water Programs," and encompass Parts 100 through 149. Prominent parts of the regulation addressing oil pollution of the water are 40 CFR 110 "Discharge of Oil"; 40 CFR 112 "Oil Pollution Prevention"; and 40 CFR 113, "Liability Limits for Small Onshore Storage Facilities."

e. Reportable Oil Discharge. 40 CFR 110 requires the person in charge of a facility that discharges "harmful oil" to report the spill to the National Response Center (800-424-8802). The criteria for "harmful oil" discharges are:

- Discharges that violate applicable water quality standards.
- Discharges that cause a film or sheen on or discoloration of the surface of the water or adjoining shorelines. Sheen means an iridescent appearance on the surface of the water.
- Discharges that cause a sludge or emulsion to be deposited beneath the surface of the water or adjoining shorelines.

f. Spill Prevention Control and Countermeasures (SPCC) Plan. 40 CFR 112 requires regulated facilities that have discharged or could reasonably discharge harmful oil into navigable U.S. waters or adjoining shorelines to prepare and implement an SPCC plan. The regulation applies to nontransportation related facilities provided:

> The facility's total above-ground oil storage capacity is greater than 1320 gallons (5000 L), or the above-ground storage capacity of a single container is in excess of 660 gallons (2500 L), or the total underground storage capacity of the facility is greater than 42,000 gallons (160,000 L). Only containers 55 gallons (208 L) or larger are counted toward total above-ground storage volumes.
>
> Facilities which, due to their location, could reasonably expect spilled oil to reach waters of the U.S.

g. General SPCC Plan Requirements. 40 CFR 112.7 provides guidelines for preparing and implementing a SPCC plan. The SPCC plan is to follow the sequence outlined in the section and includes a discussion of the facility's conformance with the appropriate guidelines. Basic principles to embody in an SPCC plan are:

(1) Practices devoted to the prevention of oil spills such as plans to minimize operational errors and equipment failures that are the major causes of spills. Operational errors can be minimized by training personnel in proper operating procedures, and increasing operator awareness of the imperative nature of spill prevention. Equipment failures can be minimized through proper construction, preventive maintenance, and frequent inspections.

(2) Plans to contain or divert spills or use equipment to prevent discharged oil from reaching navigable waters. When it is impracticable to implement spill containment measures, the facility must develop and incorporate a spill contingency plan into the SPCC plan.

(3) Plans to remove and dispose of spilled oil.

h. Specific SPCC plan requirements include:

(1) Time limits. Prepare and implement the SPCC plan within 6 months from startup. Extensions may be authorized due to non-availability of qualified personnel or delay in construction or equipment delivery beyond the control of the owner or operator (40 CFR 112.3).

(2) Certification. A registered professional engineer must certify the SPCC plan and amendments (40 CFR112.3).

(3) Plan availability. Maintain a complete copy of the SPCC plan at an attended facility or at the nearest field office if the facility is not attended at least 4 hours per day (40 CFR 112.3).

(4) Training. Conduct employee training on applicable pollution control laws, rules and regulations, proper equipment operation and maintenance to prevent oil discharge. Conduct spill prevention briefings to assure adequate understanding of the contents of the SPCC plan (40 CFR 112.7).

(5) Plan review. Review the SPCC at least once every 5 yrs (40 CFR 112.5).

(6) Amendments. Certified amendments to the SPCC are required when:

The USEPA Regional Administrator requires amendment after a facility has discharged more than 1000 gallons (3785 L) of oil into navigable waters in a single spill event or discharged oil in more than 42 gallons (159 L) quantities into navigable waters in each of two spill events within any 12-month period (40 CFR 112.4).

Within 6 months if there is a change in design, construction, operation, or maintenance that affects the potential for an oil spill (40 CFR 112.5).

The required 5-year review indicates more effective field proven prevention and control technology will significantly reduce the likelihood of a spill (40 CFR 112.5).

i. Facility Response Plans. 40 CFR 112.20 requires facility response plans to be prepared and implemented if a facility, because of its location, could reasonably be expected to cause substantial harm to the environment by discharging oil into or on navigable waters or adjoining shorelines. This regulation applies to facilities that transfer oil over water to or from vessels and have a total oil storage capacity greater than 42,000 gallons (160,000 L), or the facility's total oil storage capacity is at least 1 million gallons (3.78 million liters) with conditions. Most Corps of Engineers civil works facilities do not fall under these categories.

j. Liability Limits. 40 CFR 113 establishes size classifications and associated liability limits for small onshore oil storage facilities with fixed capacity of 42,000 gallons (160,000 L, or 1000 barrels) or less that discharge oil into U.S. waters. Removal of the discharge is performed by the U.S. Government. Unless the oil discharge was a result of willful negligence or willful misconduct, the table in 40 CFR 113.4 limits liability (Tables 8-2 and 8-3) as follows:

(1) Above-ground storage.

Table 8-2. Above-Ground Storage Classifications.

Size Class	Capacity (barrels)	Capacity (gallons)	Capacity (L)	Limit (dollars)
I	Up to 10	Up to 420	Up to 1,590 L	4,000
II	11 to 170	462 to 7,140	1,749 to 27,025 L)	60,000
III	171 to 500	7,182 to 21,000	27,184 to 79,485 L	150,000
IV	501 to 1,000	21,042 to 42,000	79,644 to 158,970 L	200,000

(2) Underground storage.

Table 8-3. Underground Storage Classifications.

Size Class	Capacity (barrels)	Capacity (gallons)	Capacity (L)	Limit (dollars)
I	Up to 10	Up to 420	1,590 L	5,200
II	11 to 170	462 to 7,140	1,749 to 27,025 L)	78,000
III	171 to 500	7,182 to 21,000	27,184 to 79,485 L	195,000
IV	501 to 1,000	21,042 to 42,000	79,644 to 158,970 L	260,000

k. Soil Quality Regulations. Regulations regarding oil contamination of soil vary from state to state. State and local laws and regulations should be reviewed for guidelines on preventing and handling soil contamination from oil spills.

l. Turbine Oil Accountability. Turbine oil accountability is a complex issue that will become increasingly important in the future. This manual will not discuss the issue in any detail or provide any specific guidance or recommendations. Turbine oil accountability at a hydroplant encompasses everything from the delivery truck to the storage tanks and into the hydroturbines themselves. A typical hydroplant utilizes thousands of gallons of turbine oil that has the potential to leak into the environment. It is anticipated that future technical reports will address this issue in more depth. Chapter 9 further discusses turbine oils.

m. Vessel General Permit. As of 28 March 2013, non-recreational vessels greater than 79 ft that are not vessels of the Armed Forces and that operate in a capacity as a means of transportation requiring National Pollutant Discharge Elimination System (NPDES) coverage for their incidental discharges will generally be subject to the Vessel General Permit (VGP). Similarly situated vessels less than 79 ft may be covered under the VGP, or may instead opt for coverage under the Small Vessel General Permit (sVGP). These permits apply to 26 specific vessel discharge categories. The use of Environmentally Acceptable Lubricants (EALs) in vessels is one of the ways to mitigate risks to the environment and gain compliance with the general permits. Operators of government vessels that are subject to the VGP and sVGP shall apply for and obtain these permits. More information is available in the USEPA publication titled "U.S. Environmental Protection Agency 2013 final issuance of its fact sheet titled *National Pollutant Discharge Elimination System (NPDES) Small Vessel General Permit for Discharges Incidental to the Normal Operation of Vessels Less than 79 Feet (sVGP).*

THIS PAGE INTENTIONALLY LEFT BLANK

CHAPTER 9

Turbine Oils

9-1. Description. The term “turbine oils” broadly refers to oils used for hydro turbines, steam turbines, and gas turbines. It is common to use the same general category of oil for all of these types of turbines. The demands on steam and gas turbines are higher as bearing temperatures are much higher for these machines. It is unusual to run bearing temperatures on hydro turbines beyond 167 °F (75 °C), while gas and steam turbines can run in the 248 °F (120 °C) range. Because of these temperature differences and the higher oxidation that can result, new generations of more oxidation resistant oils are being developed for gas and steam turbines. Many of the old turbine oil brands and types are no longer used for gas and steam turbines, though they still may be used in hydro turbines.

a. Hydro turbines, whether Francis, Pelton, or Kaplan designs, vertical or horizontal shaft, generally have a minimum of two journal bearings and one thrust bearing. These bearings consist of some form of babbitt surface bonded to a steel backing. The rotating element of the bearing is usually polished steel, either an integral part of the turbine shaft or else attached mechanically to the shaft. The thrust bearing is usually the most highly loaded bearing in the machine. The thrust bearing resists hydraulic thrust developed by the axial component of the force of the water on the turbine wheel. In the case of vertical shafts, the thrust bearing also supports the weight of the rotating parts of the hydro generator. In the case of horizontal shaft machines, the shaft bearings support the weight of the rotating parts. In the case of Pelton wheels, the shaft bearings also support the component of the hydraulic thrust that is perpendicular to the shaft. In the case of both horizontal and vertical shaft hydro generators, the shaft bearings support and stabilize the shaft and resist the forces of imbalance.

b. In general, the manufacturer of the hydro generator supplies a list of acceptable lubricating oils for a particular unit as part of the operation and maintenance data. Specifically, this recommendation should include a chart of viscosities acceptable for various operating conditions. The oil recommendation will also include whether antiwear (AW) additives are necessary. The manufacturer has selected oils that will assure long life and successful operation of the equipment. The type of oil selected is usually of the general type called turbine oil. Even though this designation refers more to steam and gas turbines than hydro turbines, many of the operating requirements are similar. This makes turbine oil the most common type of commercially available lubricating oil used in hydro turbines.

c. Most hydro turbines are connected to a plant oil system that has a centrally located oil filtration and moisture removal system. The governor system often uses oil from the same system so, in addition to lubricating the bearings, the oil must function satisfactorily in the governor. The following discussion identifies the requirements for selecting turbine lubricating oils. For additional information on lubrication and oil requirements for hydroelectric applications, refer to EM 1110-2-4205, *Hydroelectric Power Plants, Mechanical Design* (30 June 1995).

9-2. Functions. In a hydro turbine, the oil serves multiple functions. It is a hydrodynamic lubricant for turbine and generator guide bearings and thrust bearings. It is a boundary

lubrication fluid in the turbine runner hub, and it is a hydraulic fluid by which the governor controls the turbine. It also serves as a heat transfer fluid.

a. Bearings. The oil acts as a hydrodynamic lubricant in the journal bearings of the turbine and generator (e.g., Figure 9-1). The turbine guide bearing is typically a fixed diameter babbitted bearing. Generator guide bearings are similar, but typically use multiple adjustable bearing shoes. Thrust bearings operate on the same principle, but the bearing shoes are flat instead of curved. They resist much higher loads. It is common for thrust bearing loads to be in the range of 2 to 4 million pounds and sometimes even higher. A thrust runner is attached to the shaft and forms the mating bearing surface. The shoes are babbitted and the runner is steel. The runner must be precisely flat and square to the shaft with extremely tight tolerances. The oil film thickness is in the range of 0.001 to 0.002 in., which explains why such extremely tight tolerances are needed. Being significantly out of tolerance would create instabilities in the fluid film leading to bearing failure.

Figure 9-1. Bonneville Dam – Hydroturbine Units.

(1) The fluid wedge formed resists the bearing forces. Changes to the thickness of the fluid wedge can occur due to shaft vibration, alignment, shaft dogleg, load changes, changes in viscosity, oil whirl, or oil whip. Ideally no contact of the shaft to bearing shell ever occurs. However on startup, some contact is likely. Thrust bearing operating temperatures vary with the design of the turbine and generator and cooling system, but are typically less than 167 °F (75 °C). In most cases, turbine and generator guide bearings run significantly cooler, but this is not always true if the bearing clearance are too tight or other conditions exist that create additional load.

(2) Since bearings are the function that results in the highest oil temperature, it is important to remember that operating temperature greatly affects oil life. As a rule of thumb, for every 50 °F (10 °C) increase in oil temperature, the oxidation rate in the oil doubles.

b. Tilting Pad Bearings. This is an example of hydrodynamic lubrication. Tilting pad bearings are used for thrust bearings. A smooth thrust runner is attached to the shaft as one bearing surface. Below that are the tilting pads for the other bearing surface (Figure 9-2). As the machine rotates, a wedge of fluid is formed as in any hydrodynamic bearing. A mechanism is employed to allow the pads to tilt. Sometimes it is a pivot for the pad to freely rotate about and some bearings use a spring bed. Often to enhance performance and allow the oil wedge to more effectively develop, springs are removed and replaced with spacers near the leading edge. On most hydro turbine machines, an ISO VG (Viscosity Grade) 68 oil would be used. Lighter oils can be used, but are less forgiving such that many parameters must be considered carefully. Lack of adequate lubrication of tilting pad bearings can lead to failure (Figure 9-3). It is essential to build adequate oil film at startup and at speed. In most cases, a high lift pump should be used to develop the initial oil film. A good conservative value for starting film thickness is 0.003 to 0.005 in.

c. Generator Guide bearings. Generator and turbine guide bearings are another example of hydrodynamic lubrication. Generator guide bearings have shoes with adjustable clearance where turbine bearings have fixed clearance. Both operate by developing a wedge of fluid to support the radial load. Loads on these bearings are less than on thrust bearings. In real operation, the behavior of the oil film is dynamic. In a well performing bearing, the wedge never collapses and problems never occur. Because of issues such as bearing deformities, hydraulic and electrical instabilities, alignment, balance, and others, the oil film is often dynamic and can collapse. These are known as “rubs” (Figure 9-4). Shaft vibration monitoring is often added, and this can allow one to see and analyze the problems. Sometimes, more severe oil instability problems such as oil whip and oil whirl can occur.

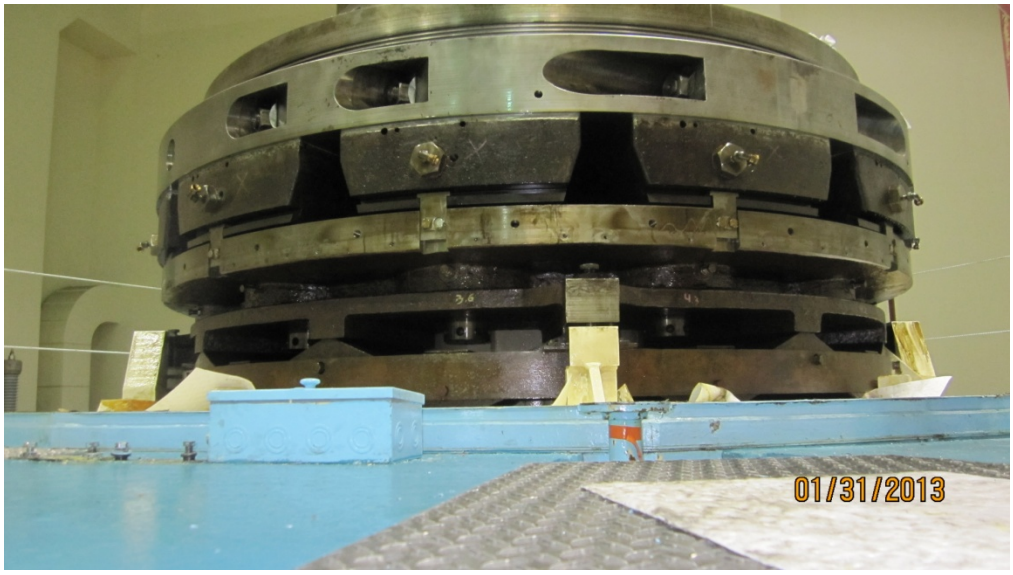

Figure 9-2. Tilting Pad Thrust Bearing Assembly

Figure 9-3. Damaged Tilting Pad Bearings.

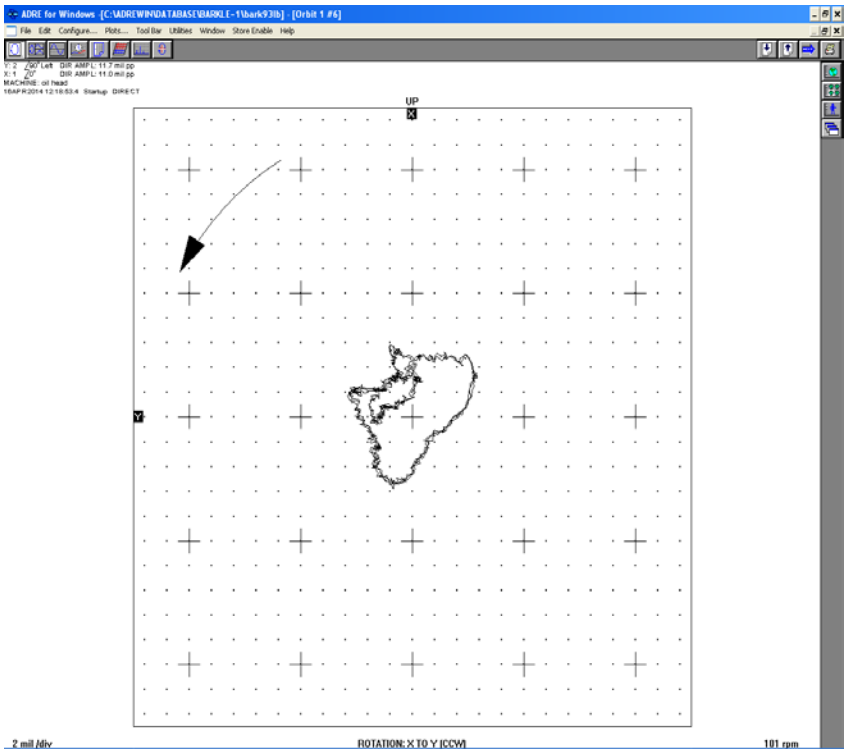

Figure 9-4. Orbit Plot from X and Y Proximity Probes Monitoring Shaft Displacement on a Hydrodynamic Bearing. The Plot Shows Eight Revolutions of the Shaft. The Loop Indicates That There Is a Bearing Rub during Each Revolution. During the Bearing Rub, Hydrodynamic Lubrication Is Lost.

d. Governors. The turbine oil is used as a hydraulic fluid. The governor along with the turbine servomotors are the hydraulic system. A governor consists of a high pressure pump, an accumulator tank, an unpressurized reservoir, control valves, hydraulic lines, filters, and actuators called servomotors. Servomotors develop the force that is used by the wicket gates to regulate the flow of water through the turbine, and thus the amount of power generation it generates. Governors generally use the same oil as is used in the hydro generator guide and thrust bearing system. Governors that operate at over 1000 psi (68.9 bar) may require an antiwear additive to the oil, but these are not common. Turbine oils operate successfully in the governor system because the requirements for the oils are very similar. For example, antifoam characteristics prevent compressible foam from being introduced into the high pressure lines. Also, Rust and Oxidation (R&O) characteristics are needed because the high pressure pumps and the pilot valve assembly have very small clearances. Rust or other oxidation products could be transported into those clearances and cause the pump to wear or the pilot valve to stick or be sluggish, resulting in a degradation or loss of governor function. Auxiliary filters are sometimes used to keep the governor oil supply free of particulates. This becomes critical with digital governors using proportional or servo valves. Kidney loop filtration systems are also recommended as part of the overall filtration system. In many typical hydraulic systems, that is not the typically provided. But, it has been proven as a successful means to contamination control for hydro turbine governors.

(1) Oil is pumped from a sump using positive displacement pumps into an air-oil tank. The air-oil tank provides pressure to the four-way hydraulic valves used for control of wicket gates and blades (Kaplan units only, e.g., Figure 9-5). The four-way hydraulic valves are called distributing valves on hydro units. From the distributing valves, two lines are routed to the hydraulic cylinders, the same as in any typical hydraulic system. The distributing valves are moved by a pilot valve and piston. The pilot valve is mechanically operated by linkages on a mechanical governor. It is a proportional valve on a digital governor.

(2) The air-oil tank typically has no physical barrier between the air and oil. On smaller systems, nitrogen bladder or piston accumulators are sometimes used. Air ingresses into the oil at the air-oil interface of this pressurized tank, taking air from the tank. On systems with excessive foam, air can sometimes cross the air-oil interface in the other direction, adding air to the tank.

(3) Some of the major areas of concern are oxidation of the oil and the eventual formation of varnishes. Another area of concern is foaming, and that has effects on the accuracy and stability of the hydraulic system and increased oxidation as the air runs through pumps, resulting in microdieseling.

e. Wicket Gates. Wicket gates have two or three journal bearings and one thrust bearing or collar per gate. The journal bearings resist the hydrostatic and hydrodynamic loads involved in regulating the flow of water into the turbine. They also resist bending in the shaft that results from the thrust of the actuating linkage. The thrust bearing or collar positions the wicket gate vertically between the upper and lower surfaces of the speed ring in the distributor. The thrust collar has to support the weight of the wicket gates, but under some conditions must resist an upward thrust as well. Wicket gate bearings are subject to high loads, and the shafts do not make complete revolutions, but instead move over an arc, with usually about 90 degrees of motion from completely closed to completely open. This quarter-turn usually takes 5 seconds or more.

An improperly adjusted governor may hunt, moving the gates back and forth continually in an arc as small as 1 degree. Even when shaft seals are provided, the grease can come into contact with water. In the worst cases, water can wash the lubricant out of the bearings.

(1) Traditionally, wicket gate bearings have been lubricated with a lithium-based, EP NLGI-2 grease. Auto-lubrication can be used to provide fresh grease every day. Generally, the bearings in the wicket gate linkages are lubricated with the same grease and by the same system. Environmental concerns have led to attempts to use environmentally acceptable greases. Refer to Chapter 13 for guidance on environmentally acceptable lubricants.

(2) A way to reduce or eliminate the release of greases to the environment is to use self-lubricating bearings or bushings. See Chapter 12 for further discussion and EM 1110-2-2610, *Mechanical and Electrical Design of Navigation Locks and Dams* (30 June 2013). There are many suppliers of such bushings. Refer to Construction Engineering Research Laboratory (CERL) Technical Report 99/104, *Greaseless Bushings for Hydropower Applications: Program, Testing, and Results* for guidance on such bearings (Jones et al. 1999).

Figure 9-5. Kaplan Turbine.

Figure 9-6. Francis Turbine Runner Transported into Powerhouse.

Figure 9-7. Generator Rotor (460-ton).

9-3. Turbine Oil Basics. Turbine oil for hydro generating units has relatively mild service when compared to other turbine types and other industrial applications. However, hydro turbine oil is expected to have a longer service life than most applications. From past history, 30 yrs of service is considered quite normal. To achieve this, attention to oil properties, oil compatibility, and

replacement procedures is absolutely necessary. Turbine oils for hydro units will be either ISO VG 68 or 100. ISO VG 68 is most common. ISO Grade 100 is used on many Kaplan units. In certain situations, it has better boundary lubrication characteristics for the turbine blades. Specific additives have also been recently used to help improve boundary lubrication.

a. In the past, Group I turbine oil was the norm. Though the oxidation rate was higher than current oils, the high solvency could readily dissolve any varnishes that formed. Group II oils are almost exclusively produced today by refineries. They have better oxidation properties as evidenced by higher RPVOT values or turbine oil stability test (TOST) values. Even though they have better oxidation resistance, their lack of solvency can frequently allow varnish to form deposits when oxidation progresses too far. RPVOT has been the most common property to specify for turbine oils. TOST is also a valid measure of oxidation resistance. It is common to specify TOST for oils used for gas and steam turbines, which, because of their severity of service, have some new oils with extremely high oxidation resistance.

b. There are a few limited sources for Group I oils, though they are rare at this time. There are some vendors that claim they are supplying Group I, but are inaccurate in that claim. One way to know for sure is to test the oil per ASTM D611, "Standard Test Methods for Aniline Point and Mixed Aniline Point of Petroleum Products and Hydrocarbon Solvents." The aniline point for Group I napthenic oils in the range of 158 to 212 °F (70 to 100 °C). For Group I paraffinic oils, it is 194 to 230 °F (90 to 110 °C). For Group II oils, it is 212 to 266 °F (100 to 130 °C). *

c. The oil must be R&O inhibited and have an antifoam additive. Hydro turbines do have exposure to water, though often water is introduced from the atmosphere through tank breathers. Keeping water content low is important and the rust inhibitors provide additional protection for the system. Oxidation inhibitors are critical. Having a high initial RPVOT value is an indicator of the effectiveness of the oxidation inhibitors. Antifoam additives are critical to operation of the hydropower unit. High foam can cause operational problems and is likely to reduce life as the air passes through the pump and causes accelerated oxidation.

d. The oil should also be resistant to emulsification and separate readily from water. This allows water to be more readily separated from the oil by whatever means the system has available whether it is coalescing media, vacuum dehydration, or other.

e. Extreme pressure additives are typically not present in turbine oils. Antiwear additives are present in a few of the turbine oils. Extreme pressure and antiwear additives can have some effect on the results of lubricity tests. They are not as effective as boundary lubricity additives, which truly enhance performance in boundary lubrication. Stock turbine oils do not contain such lubricity additives.

9-4. Guidance on the Use of UFGS Turbine Oil Specification. For specifying new oil, use UFGS 48 13 19.00, *Turbine Oil* (May 2014). This is available under UFGS on the Whole Building

* Tribology and Lubrication Technology, New Base Oils Pose a Challenge for Solubility and Lubricity, Dr. Boris Zhmud and Michel Roegiers, July 2009

Design Guide web site. This specification should be used whenever purchasing new turbine oil. For delivery, storage, and handling of the oil, it is up to the user to develop specifications specific to their site. These should be included in separate specification sections.

a. When soliciting for new contracts or orders using this specification for purchase of turbine oil that will be mixed with the in-service oil or as a replacement oil, the Government should require all bidders to provide a 1- gallon (3.78-L) sample of the proposed oil, which must meet the oil properties of Section 48 13 19.00 to be eligible for award. The Government shall test this oil for compatibility with the in-service oil by sending a portion (typically 1 qt, but check with the lab for specific requirements) of new oil in an unmarked container, and a sample of in-service oil to a lab.

b. Before awarding the contract, the compatibility of new oil must be verified by the ASTM D7155 Test, "Standard Practice for Evaluating Compatibility of Mixtures of Turbine Lubricating Oils." The tests are performed in various mixtures of 100% old oil, 90% old/10% new, 50% old/50% new, 10% old/90% new, and 100% new. The 100% old and 100% new tests are used to verify that there is no cloudiness in either of these oils that may invalidate the tests. 10% old and 90% new is representative of what can be expected after adding the new oil in the system. It is very expensive to ensure all of the old oil is removed. The other ratios are useful since various zones in the system may temporarily be exposed to different mix ratios.

9-5. Turbine Oil Selection. The importance of compatibility testing cannot be overstated. The reader should refer to Appendix G, ERDC/CERL TR-04-28, *Performance Problems with Group 2 Hydrocracked Turbine Oils in Corps of Engineers Hydropower Facilities* (Micetic and Beitelman 2004). This provides discussion on compatibility problems between Group 1 and Group 2 turbine oils. The purpose of compatibility is to ensure an absence of chemical reactions between the new and existing oil. The reactions that occur are between the additives, not the old Group I and new Group II base oils. The additive chemistries are in general proprietary so it is unpredictable what may happen when mixing the two oils. The compatibility tests answer this question reliably. Another factor is that the old oil often contains a mixture of oils that may have occurred over a period of many years. Even if the same oil was used for years, the additive package was not necessarily consistent. Depending on the severity and duration of use for incompatible oils, it will very likely be necessary to flush piping, physically wipe out sumps or replace some components to restore the system to an acceptable condition. Incompatible oils are a leading cause of accelerated varnish formation. Of particular concern is any reaction that may deplete antioxidant additives. This can greatly shorten the usable life of the oil and accelerate the time where varnish and deposits may occur. Cleaning and flushing should also be done when replacing turbine oil. Refer to ASTM D6349 for further guidance.

a. For Kaplan units especially, the friction properties in boundary lubrication can be particularly important. The design of the turbine will determine how important these properties are. The phenomenon is often referred to as "stick-slip" and effects load, stress, and fatigue of turbine parts, particularly the runner hub. It also has an impact on the how well the governor can control the unit. Stick-slip properties of the oil are essentially the properties under boundary lubrication conditions. The main parameters affecting this are viscosity and additives. Turbine manufacturers base their design on a particular oil viscosity and certain assumptions on friction.

If one deviates significantly from these parameters, it can have an effect on turbine operation and longevity.

b. Antifoaming properties are also particularly important. The ability of the oil to maintain low foaming is important in reducing oxidation. It is also important in the ability of the governor hydraulic system to function properly and control the unit. No hydraulic system operates well when there is air in the fluid. Water is one enemy to the antifoaming additives. High water content can allow the additives to agglomerate and be removed. Oil compatibility is also important to avoid any reactions that may involve the antifoam additives.

9-6. Turbine Oil Consolidation. One turbine oil type is used for the various functions of each generating unit. This is almost universally true, though there may be some rare exception where new makeup oil is added for one portion of the system only. Consolidation is important in reducing oil inventory while still being able to work with the oil distributions systems that were originally built in the powerhouse. It is not reasonable to reconfigure these, as storage tank space is limited in the plant and most of the tanks were installed before placing concrete above them.

9-7. Essential Properties of Turbine Oil. Table 9-1 lists the essential properties for turbine oils.

Table 9-1. Essential Properties of Turbine Oil

Property	**Definintion**
Viscosity-	Viscosity is the most important physical property of an oil. Viscosity determines how the oil film will develop to minimize friction. Kinematic viscosity is typically employed for lubricating oils in the United States. Units of measure are centistokes. Viscosity is measured at 104 and 212 °F (40 and 100 °C) per ASTM D445.
Viscosity Index-	The viscosity index is a widely used and accepted measure of the variation in kinematic viscosity due to changes in the temperature of a petroleum product between 104 and 212 °F (40 and 100 °C). A higher viscosity index indicates a smaller decrease in kinematic viscosity with increasing temperature of the lubricant. The viscosity index is used in practice as a single number indicating temperature dependence of kinematic viscosity. The value is calculated using methods in ASTM D2270.
Flash Point -	Flash point represents the lowest temperature at which the vapor concentration above the oil will ignite in a flash in the presence of flame. The test is a measure of the tendency of oil to form a flammable mixture. Results are expressed in degrees Celsius. The test is in accordance with ASTM D92.
Pour Point	Pour point is an index of the lowest temperature at which the oil is usable. The test is in accordance with ASTM D97.
Acid Number	Acid number is one measure that indicates oil oxidation. Two methods can be used. ASTM D664 is the potentiometric titration method and it is preferred for darker oils. ASTM D974 is the indicator titration method and is suitable for clean, bright, and light colored oils. New oils should be clean and bright. Older oxidized oils would tend to be darker.
Oxidation Stability by RPVOT	Known as the rotating pressure vessel oxidation test. This test subjects the sample to an oxygen environment, temperature, pressure, and rotation. The test emulates the oxidation process that occurs in-service oil, but at an accelerated rate. The test measures time for oxygen pressure to reduce drastically. This indicates the time in minutes when oxidation inhibitors have been largely consumed. The test is performed in accordance with ASTM D2272.

Property	Definintion
Oxidation Characteristics	Another method to establish the ability of an oil to withstand oxidation is the TOST or turbine oil stability test. This test method is not accelerated like the RPVOT so it is not a practical test for in-service oil testing. It is a measure of oil life, when subject to the test conditions, in hours. The test is performed in accordance with ASTM D943.
Rust Preventive Characteristics	This test evaluates the ability of oils to prevent rusting of ferrous parts if the oil is contaminated with water. The test is performed in accordance with ASTM D665.
Water Content	The test measures the amount of water in the oil in ppm. The test is performed by coulometric Karl Fisher titration in accordance with ASTM D6304.
Water Separability-	The test measures the ability of the oil to separate water. The test is performed in accordance with ASTM D1401.
Corrosion for Oil by Copper Strip Varnish Test	Crude petroleum contains sulfur compounds, most of which are removed during refining. sulfur compounds remaining in the petroleum product, can have a corroding action on various metals and this corrosivity is not necessarily related directly to the total sulfur content. The test is performed in accordance with ASTM D130.
Foaming Characteristics	Test is performed in three sequences at different temperatures. In each sequence, the air is blown in the oil for 5 minutes, then allowed to settle for 10 minutes. The volume of foam (ml) is measured after both periods. The tendency of oil to foam can result in oil oxidation, varnish, inadequate lubrication (lubricant starvation), decreased ability for governor to control, decreased heat transfer, cavitation, overflow loss.
Air Release	The recommended test is the gas bubble separation test also known as the Standard Test Method for Air Release Properties of Petroleum Oils. The test is performed in accordance with ASTM D3427.
Cleanliness	This test measure particulate contamination in the oil. The test is performed in accordance with ISO D4406.
Appearance	New oil will appear clean and bright. Appearance can be used as a quantitative indicator of problems with oxidation or other issues.

9-8. Other Properties of Used Turbine Oils. A critical test when adding oil to the system or replacing oil is the compatibility test, ASTM D7155. Tests for ultracentrifuge testing, microscopic particle count, membrane patch colorimetry, and RULER® (Remaining Useful Life Evaluation Routine) are useful additional tests for assessing oxidation and remaining life. Tight filtration, higher oil flow rates, higher temperatures, and Group II oil formulations have combined to create new failure modes in hydro lube oil systems. This is despite the fact that Group II oils do have increased ability to resist oxidation. Varnish remains a problem for many systems due to a great extent to reduced aromatics in the oil. The tests above may help to provide further insight on varnish problems.

9-9. Monitoring Program. The recommended minimum frequency of testing is annual. That usually suffices in dam and hydropower applications. Other more severe applications involving higher temperatures or more punishing environments will demand more frequent testing. Monitoring programs should include all tests listed in Section 9-8. It is important to use a trusted lab and check references from other users. Use ASTM tests to help ensure consistency and reduce risk of invalid results.

9-10. Purification and Filtration. Purification and filtration requirements vary widely based on the application. Manufacturer's recommendations are given for various components including those used in hydraulic systems. These can be very misleading as the manufacturers do not want

their products to be perceived as sensitive to contamination. If reduced failures and maintenance are important, and they always are, minimizing contamination is the most effective way to do this. For example, in a hydro turbine the goal for contamination is to be at or better than ISO 17/15/12. Hydroplants should strive to ISO 14/12/10, which is a recognized level where silt control is effective and wear rates are minimized. If achieved, this contamination level will provide much lower wear and failure rates, particularly for the governor. See Chapter 6 for more information on purification and filtration.

a. It is realized that most systems in locks and dams have historically run at significantly higher contamination levels. In the past, filters were viewed as items to maintain. In fact, they reduce overall maintenance. The key to filtration is to start out with a clean system and use filters to keep it that way. Adding filters, especially cartridge filters to a dirty system can be a slow and expensive proposition and has frequently led to the opinion that filters can cause more maintenance.

b. High velocity flushing is a very effective tool for cleaning systems. This is not always achievable in systems with dead ends that cannot be flushed and cleaned. Kidney loop filtration with high capacity filtration has been effectively used, especially on hydro turbines. It can take months or even longer to achieve the target levels for contamination since these systems are very large. It is generally necessary to do physical cleaning of problem areas such as sumps and tanks in conjunction with this. Again, see ASTM D6439-11, "Standard Guide for Cleaning, Flushing, and Purification of Steam, Gas, and Hydroelectric Turbine Lubrication Systems."

c. There are numerous types of filtration systems including cartridge filters, coalescing filters, electrostatic filters, and centrifugal filtration. Cartridge filters are good for removing particles alone. Effective filters will have a beta ratio, which is the ratio of particles in to particles out at a given particle size. Anything without a published beta ratio is not going to be a good filter. Coalescing filters remove particles, varnish, and to a limited extent, water. Electrostatic filters are very good for removing varnish. The balanced charge agglomeration causes the tiny varnish particles to stick together so that they can be much more effectively removed. Vacuum dehydration systems are also important for water removal. Centrifuges are obsolete and their performance cannot compare to vacuum dehydration.

9-11. Operating Temperature. Operating temperature of the turbine oil will be greatly extended if the oil temperature is kept as low as possible. Typically, the thrust bearing runs hotter than other parts of the system. At and below 158 °F (70 °C) is quite common though 167 °F (75 °C) is sometimes considered acceptable for parts of the year. Where possible, high temperature situations should be corrected by fixing issues with the coolers or problems with the thrust bearing itself. In some cases, baffles added to the thrust bearing tub can provide enhanced cooling. In most cases, the turbine guide, lower guide, and upper guide bearings run cooler than this, but that is not always true. Alignment and bearing clearance should be checked when excessive guide bearing temperatures are found.

9-12. Storage and Handling Specific to Turbine Oils. The typical arrangement uses the dirty oil tank to receive new oil or oil returned from the turbine. This oil is processed by dehydration and filtration. When it is at an acceptable cleanliness and dryness level, it is put in the clean oil tank. From there it can be added to fill a unit. Typically, in distribution through the headers, it will

pick up additional contamination from the piping. If this is excessive, the headers should be hot oil flushed. Once the oil is in the unit, there is typically no additional filtration or dehydration that is performed. Because of this, it is important to drain, process, and refill the oil during other regularly scheduled maintenance. The recommended maximum interval is 4 yrs. It may need to be more frequent on some units. On units with digital governors, it is considered critical to add kidney loop filtration to that part of the system and maintain an ISO cleanliness code near to or better than ISO 17/15/12.

9-13. Degradation.

a. This is a critical property. It is widely understood that oxidation is the primary mechanism of lubricant degradation. It is the reason that varnish occurs. Per the oil specification, the required RPVOT for new oil shall not be less than 500 minutes. The test for RPVOT subjects the sample to pressurized oxygen, rotation, and temperature, and measures the amount of time until rapid oxygen uptake occurs. This represents a point in time where the antioxidants have been depleted and oil oxidation will take off rapidly. A similar thing happens with in-service oil. The antioxidants, phenols, and amines provide protection from oxidation. As long as there is a significant amount of these antioxidants present, oxidation remains low. Once a critical low level occurs, oxidation takes off and the oil has little remaining usable life. Consider oil to be worn out when RPVOT reaches 25% of its original value.

b. Though hydro, gas, and steam turbines all use turbine oil, the applications are quite different. Gas and steam turbines experience much higher bearing temperatures most of the time. Oxidation rates are higher and oil life is lower. Consequently, the life of gas and steam turbines is much less that the 20 to 30 yrs commonly expected in hydro turbines. Their application is more severe and the market has adapted by providing oils with much higher RPVOT or TOST values. They have also grown to understand that keeping contamination and water content low are critical to extend oil life. These variables do relate to oxidation of oil (Figure 9-8). Temperature is also critical. For every 18 °F (10 °C) temperature increase, there is a twofold decrease in oil life.

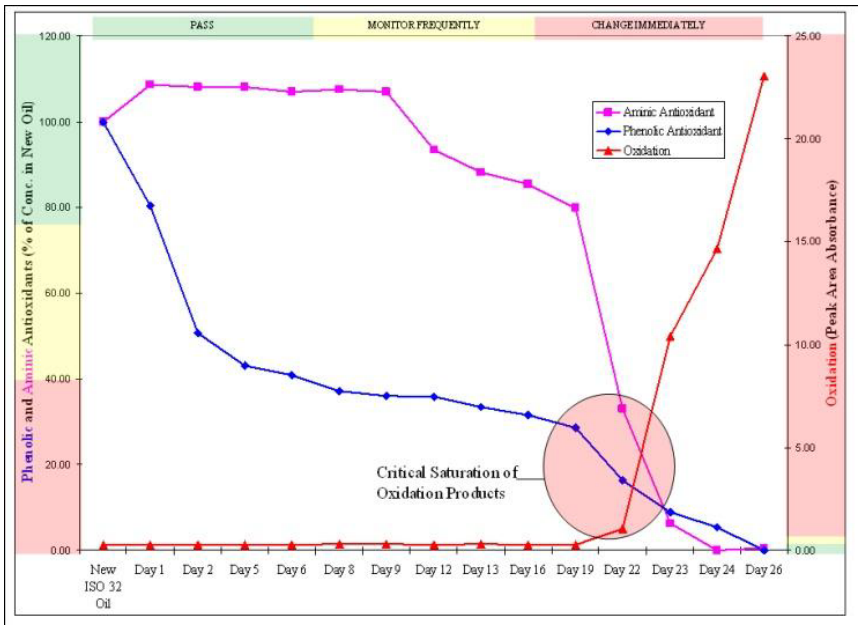

Figure 9-8. Representative Graph of Antioxidants vs. Oxidation Rate of Oil.

c. Advances in the gas and steam segment have been so significant that turbine oils commonly used in hydro turbines are now classified as “circulating oils” not “turbine oils.” The newest turbine oils used by gas and steam can have RPVOT >1700 minutes, more than three times that required in Corps tests. Note that RPVOT tests with extremely high numbers are typically unreliable to reproduce. The gas and steam turbine industries have adapted by demanding more oxidation resistant oils to help solve common oxidation and varnish problems.

CHAPTER 10

Hydraulic Fluids

10-1. Purpose of Hydraulic Fluids.

a. Power Transmission. The primary purpose of any hydraulic fluid is to transmit power mechanically throughout a hydraulic power system. To ensure stable operation of components, such as control valves and servos, the fluid must be free of contaminants to extent possible, of the proper viscosity, and incompressible.

b. Lubrication. Hydraulic fluids must provide the lubricating characteristics and qualities necessary to protect all hydraulic system components against friction and wear, rust, oxidation, corrosion, and demulsification. These protective qualities are usually provided through the use of additives.

c. Sealing. Many hydraulic system components, such as control valves, operate with tight clearances where seals are not provided. In these applications, hydraulic fluids must provide the seal between the low pressure and high pressure side of valve ports. The amount of leakage will depend on the closeness or the tolerances between adjacent surfaces and the fluid viscosity.

d. Cooling. The circulating hydraulic fluid must be capable of removing heat generated throughout the system.

10-2. Physical Characteristics. The physical characteristics of hydraulic fluids are similar to those already discussed for lubricating oils. Only those characteristics requiring additional discussion are addressed below.

a. Viscosity. As with lubricating oils, viscosity is the most important characteristic of a hydraulic fluid and has a significant impact on the operation of a hydraulic system. If the viscosity is too high, then friction, pressure drop, power consumption, and heat generation increase. Furthermore, sluggish operation of valves and servos may result. If the viscosity is too low, internal, and external leakage will increase, pump slippage will increase, and the wear rate will increase. The oil film may be insufficient to prevent excessive wear or possible seizure of moving parts, pump efficiency may decrease, and sluggish operation may be experienced.

b. Compressibility. Compressibility is a measure of the amount of volume reduction due to pressure. Compressibility is sometimes expressed by the “bulk modulus,” which is the reciprocal of compressibility. Petroleum fluids are relatively incompressible, but compression of 0.4 to 0.5% by volume per 1,000 psi (68.9 bar), up to 4,000 psi (275.8 bar), is typical for mineral oil. Compressibility increases with pressure and temperature and has significant effects on high pressure fluid systems. Problems directly caused by compressibility include: servos that fail to maintain static rigidity and experience adverse effects in system amplification or gain; loss in efficiency, which is counted as power loss because the volume reduction due to compressibility cannot be recovered; and cavitation, which may cause metal fracture, corrosive fatigue, and stress corrosion.

c. Stability. The stability of a hydraulic fluid is the most important property affecting service life. The properties of a hydraulic fluid can be expected to change with time. Factors that influence the changes include: mechanical stress and cavitation, which can break down the viscosity improvers and cause reduced viscosity; and oxidation and hydrolysis, which cause chemical changes, formation of volatile components, insoluble materials, and corrosive products. The types of additives used in a fluid must be selected carefully to reduce the potential damage due to chemical breakdown at high temperatures.

10-3. Quality Requirements. The quality of a hydraulic fluid is an indication of the length of time that the fluid's essential properties will continue to perform as expected, i.e., the fluid's resistance to change with time. The primary properties affecting quality are oxidation stability, rust prevention, foam resistance, water separation, and antiwear. Many of these properties are achieved through use of chemical additives. However, these additives can enhance one property while adversely affecting another. The selection and compatibility of additives is very important to minimize adverse chemical reactions that may destroy essential properties.

a. Oxidation Stability. Oxidation, or the chemical union of oil and oxygen, is one of the primary causes for decreasing the stability of hydraulic fluids. Once the reactions begin, a catalytic effect takes place. The chemical reactions result in formation of acids that can increase the fluid viscosity and can cause corrosion. Polymerization and condensation produce insoluble gum, sludge, and varnish that cause sluggish operation, increase wear, reduce clearances, and plug lines and valves. The most significant contributors to oxidation include temperature, pressure, contaminants, water, metal surfaces, and agitation.

(1) Temperature. A common rule of thumb states that the rate of chemical reactions, including oxidation, approximately doubles for every 18 °F (10 °C) increase in temperature. The reaction may start at a local area where the temperature is high. However, once started, the oxidation reaction has a catalytic effect that causes the rate of oxidation to increase.

(2) Pressure. As the pressure increases, the fluid viscosity also increases, causing an increase in friction and heat generation. As the operating temperature increases, the rate of oxidation increases. Furthermore, as the pressure increases, the amount of entrained air and associated oxygen also increases. This condition provides additional oxygen to accelerate the oxidation reaction.

(3) Contaminants. Contaminants that accelerate the rate of oxidation may be dirt, moisture, joint compounds, insoluble oxidation products, or paints. A 1% sludge concentration in a hydraulic fluid is sufficient to cause the fluid to oxidize in half the time it would take if no sludge were present. Therefore, the contaminated fluid's useful life is reduced by 50%.

(4) Water and metal. Certain metals, such as copper, are known to be catalysts for oxidation reactions, especially in the presence of water. Due to the production of acids during the initial stages of oxidation, the viscosity and neutralization numbers increase. The neutralization number for a fluid provides a measure of the amount of acid contained in a fluid. The most commonly accepted oxidation test for hydraulic fluids is the ASTM Method D943 Oxidation Test. This test measures the neutralization number of oil as it is heated in the presence of pure oxygen, a metal catalyst, and water. Once started, the test continues until the neutralization number reaches a value of 2.0. One series of tests provides an indication of how the neutralization number is affected by contaminants.

With no water or metal contaminants, the neutralization number reached 0.17 in 3500 hours. When the test was repeated with copper contaminant, the neutralization number reached a value of 0.89 after 3000 hours. The test was subsequently repeated with copper and water contamination and the neutralization number reached 11.2 in approximately 150 hours.

(5) Agitation. To reduce the potential for oxidation, oxidation inhibitors are added to the base hydraulic fluid. Two types of inhibitors are generally used: chain breakers and metal deactivators. Chain breaker inhibitors interrupt the oxidation reaction immediately after the reaction is initiated. Metal deactivators reduce the effects of metal catalysts.

b. Rust and Corrosion Prevention. Rust is a chemical reaction between water and ferrous metals. Corrosion is a chemical reaction between chemicals (usually acids) and metals. Water condensed from entrained air in hydraulic system causes rust if the metal surfaces are not properly protected. In some cases, water reacts with chemicals in a hydraulic fluid to produce acids that cause corrosion. The acids attack and remove particles from metal surfaces allowing the affected surfaces to leak, and in some cases to seize. To prevent rust, hydraulic fluids use rust inhibitors that deposit a protective film on metal surfaces. The film is virtually impervious to water and completely prevents rust once the film is established throughout the hydraulic system. Rust inhibitors are tested according to the ASTM D665 Rusting Test. This test subjects a steel rod to a mixture of oil and salt water that has been heated to 140 °F (60 °C). If the rod shows no sign of rust after 24 hours, the fluid is considered satisfactory with respect to rust-inhibiting properties. In addition to rust inhibitors, additives must be used to prevent corrosion. These additives must exhibit excellent hydrolytic stability in the presence of water to prevent fluid breakdown and the acid formation that causes corrosion.

c. Air Entrainment and Foaming. Air enters a hydraulic system through the reservoir or through air leaks within the hydraulic system. Air entering through the reservoir contributes to surface foaming on the oil. Good reservoir design and use of foam inhibitors usually eliminate surface foaming. The placement of vertical baffles to separate the return oil from the pump suction is recommended to prevent turbulence and foaming at the pump suction. See EM 1110-2-2610, *Mechanical and Electrical Design of Navigation Locks and Dams* (30 June 2013), Chapter 3 for further information on reservoir design.

(1) Air entrainment is a dispersion of very small air bubbles in a hydraulic fluid. Oil under low pressure absorbs approximately 10% air by volume. Under high pressure, the percentage is even greater. When the fluid is depressurized, the air produces foam as it is released from solution. Foam and high air entrainment in a hydraulic fluid cause erratic operation of servos and contribute to pump cavitation. Oil oxidation is another problem caused by air entrainment. As a fluid is pressurized, the entrained air is compressed and increases in temperature. This increased air temperature can be high enough to scorch the surrounding oil and cause oxidation.

(2) The amount of foaming in a fluid depends on the viscosity of the fluid, the source of the crude oil, the refinement process, and usage. Foam depressants are commonly added to hydraulic fluid to expedite foam breakup and release of dissolved air. However, it is important to note that foam depressants do not prevent foaming or inhibit air from dissolving in the fluid. In fact, some antifoamants, when used in high concentrations to break up foam, actually retard the release of dissolved air from the fluid.

d. Demulsification or Water Separation. Water that enters a hydraulic system can emulsify and promote the collection of dust, grit, and dirt. This can adversely affect the operation of valves, servos, and pumps, increase wear and corrosion, promote fluid oxidation, deplete additives, and plug filters. Highly refined mineral oils permit water to separate or demulsify readily. However, some additives such as antirust treatments actually promote emulsion formation to prevent separated water from settling and breaking through the antirust film.

e. Antiwear Properties.

(1) Conventional hydraulic fluids are satisfactory for low pressure and low speed applications. However, hydraulic fluids for high pressure (over 1000 psi [68.95 bar]) and high speed (over 1200 rpm) applications that use vane or gear pumps must contain antiwear additives. These applications do not permit the formation of full fluid film lubrication to protect contacting surfaces — a condition known as boundary lubrication. Boundary lubrication occurs when the fluid viscosity is insufficient to prevent surface contact. Antiwear additives provide a protective film at the contact surfaces to minimize wear. At best, use of a hydraulic fluid without the proper antiwear additives will cause premature wear of the pumps and cause inadequate system pressure. Eventually the pumps will be destroyed.

(2) Quality assurance of antiwear properties is determined through standard laboratory testing. Laboratory tests to evaluate antiwear properties of a hydraulic fluid are performed in accordance with ASTM D6973. This test procedure is generally conducted with a variety of high speed, high pressure pump models manufactured by Vickers or Denison. Throughout the tests, the pumps are operated for a specified period. At the end of each period, the pumps are disassembled and specified components are weighed. The weight of each component is compared to its initial weight; the difference reflects the amount of wear experienced by the pumps for the operating period. The components are also inspected for visual signs of wear and stress.

10-4. Use of Additives. Many of the qualities and properties discussed above are achieved by the product manufacturer's careful blending of additives with base oil stocks. Because of incompatibility problems and the complex interactions that can occur between various additives, oil producers warn users against attempting to enhance oil properties through indiscriminate use of additives. The various types of additives and their use are discussed in Chapter 5.

10-5. Types of Hydraulic Fluids.

a. Petroleum. Petroleum-based oils are the most commonly used stock for hydraulic applications where there is no danger of fire, no possibility of leakage that may cause contamination of other products, no wide temperature fluctuations, and where risk of environmental impact is low. The main advantages are low cost, wide availability, good lubricity, and a large number of suppliers and manufacturers. Additives are provided primarily for rust prevention, oxidation, foam, and wear.

b. Fire Resistant. In applications where a hydraulic fluid may come in contact with a source of ignition or with the surface of very hot equipment, fire resistant hydraulic fluids should be used. These include water-containing fluids such as water glycols and water-in-oil fluids with emulsifiers, stabilizers, and additives, and water-free fluids that are ester or glycol based. The

standard for fire resistant hydraulic fluids is ISO 12922. System components, especially pumps, should be checked for compatibility and maximum operating pressure with these fluids. The ISO recognizes four major groups of fire resistant hydraulic fluids and has assigned them codes based on their chemistry: HFA for high water-containing fluids, HFB for invert emulsions, HFC for water glycols, and HFD for water-free fluids including synthetics. Water-containing fluids (HFA, HFB, and HFC) each require special handling or equipment for use. Although the water in these fluids makes them very resistant to ignition and fire, they typically require modification to standard hydraulic equipment before they can be used. There may also be limitations to operating temperatures and pressures with water-containing fluids.

(1) Water-glycol. Water-glycol fluids typically contain from 25 to 45% water to provide the fire resistance, plus a glycol such as ethylene, diethylene, or propylene, which is nontoxic and biodegradable, and a thickener such as polyglycol to provide the required viscosity. These fluids also provide all the important additives such as antiwear, foam, rust, and corrosion inhibitors. Operating temperatures for water-glycol fluids should be maintained below 120 °F (50 °C) to prevent evaporation and deterioration of the fluid. To prevent separation of fluid phases or adverse effects on the fluid additives, the minimum temperature should not drop below 41 °F (5 °C).

(a) Viscosity, pH, and water hardness monitoring are very important in water-glycol systems. If water is lost to evaporation, the fluid viscosity, friction, and operating temperature of the fluid will increase. The end result is sluggish operation of the hydraulic system and increased power consumption. If fluid viscosity is permitted to drop due to excessive water, internal leakage at actuators will increase and cause sluggish operation. A thin fluid is also more prone to turbulent flow, which will increase the potential for erosion of system components.

(b) Under normal use, the fluid pH can be expected to drop due to water evaporation, heat, and loss of corrosion inhibitors. The fluid pH should be slightly alkaline (i.e., above pH 8) to prevent rust. However, because of their volatility and toxicity, handling of the amine additives that stabilize the pH is not recommended. Therefore, these essential additives are not usually replenished. Fluids with pH levels that drop below 8 should be removed and properly discarded.

(c) Makeup water added to the system must be distilled or soft deionized. The calcium and magnesium present in potable water will react with lubricant additives causing them to floc or come out of solution and compromise the fluid’s performance. When this condition occurs, the fluid is permanently damaged and should be replaced. To prolong the fluid and component life, water added to the system should have a maximum hardness of 5 parts per million (ppm).

(2) Water-oil emulsions.

(a) Oil-in-water. These fluids consist of very small oil droplets dispersed in a continuous water phase. These fluids have low viscosities, excellent fire resistance, and good cooling capability due to the large proportion of water. Additives must be used to improve their inherently poor lubricity and to protect against rust.

(b) Water in oil. The water content of water-in-oil fluids may be approximately 40%. These fluids consist of very small water droplets dispersed in a continuous oil phase. The oil phase provides good to excellent lubricity while the water content provides the desired level of

fire resistance and enhances the fluid cooling capability. Emulsifiers are added to improve stability. Additives are included to minimize rust and to improve lubricity as necessary. These fluids are compatible with most seals and metals common to hydraulic fluid applications. The operating temperature of water-in-oil fluids must be kept low to prevent evaporation and oxidation. The proportion of oil and water must be monitored to ensure that the proper viscosity is maintained especially when adding water or concentrated solutions to the fluid to make up for evaporation. To prevent phase separation, the fluid should be protected from repeated cycles of freezing and thawing.

(3) Water-free fire resistant fluids. Water-free fire resistant fluids approved for use by most major manufacturers of equipment used in civil works projects include: glycol based, synthetic ester based, and phosphoric acid or phosphate ester based. These fluids provide satisfactory operation at high temperatures without loss of essential elements (in contrast to water-based fluids). The fluids are also suitable for high pressure applications. Glycol and synthetic ester-based fluids have good viscosity-temperature behavior, but the viscosity-temperature behavior of phosphate ester-based fluids is considered poor. The typical temperature range for these fluids is between -4 and 122 °F (-20 and 50 °C). Phosphate ester-based fluids have a high specific gravity so pump inlet conditions must be carefully selected to prevent cavitation. Phosphate esters have flash points above 400 °F (204 °C) and auto-ignition temperatures above 900 °F (483 °C), making these fluids less likely to ignite and sustain burning. Refer to military performance specification MIL-PRF-46170C, *Hydraulic Fluid, Rust Inhibited, Fire Resistant, Synthetic Hydrocarbon Base* (19 Jan 2001). Seal compatibility is very important when using synthetic fluids. Check with fluid and seal manufacturer and equipment manufacturer for compatibility. Synthetic ester-based fire resistant fluids may also be considered environmentally acceptable.

c. Environmentally Acceptable (EA) Hydraulic Fluids. Environmental acceptability is determined by several factors including biodegradability and toxicity. The requirements for environmentally acceptable fluids are further discussed in Chapter 13. ISO 15380 identifies four categories of biodegradable hydraulic oil. They are HETG, or triglyceride, which are biobased or vegetable oils such as rapeseed; HEES, synthetic ester; HEPG, polyglycol, or PAG; and hydraulic environmental polyalphaolefin (HEPR), hydrocarbon, and ester mix. Of these, synthetic ester has taken a larger market share particularly in Europe. For hydraulic power systems using synthetic esters, it is important to design the system to minimize the ingress of water. This is because the presence of water, especially in combination with heat, can cause a hydrolytic reaction resulting in acids that can attack components. For systems exposed to water and high heat, saturated esters are recommended over partially saturated esters. Tri-glycerides have several disadvantages when compared to the others, including short life, unstable viscosity, and tendency to gumming and gelling at low temperatures. MIL-PRF-32073A, *Hydraulic Fluid, BioBased*, is a military performance specification that covers biobased hydraulic fluids made with renewable resources for use in environmentally sensitive areas such as construction, forestry, river, and mining.

(1) EA hydraulic fluid design considerations. Environmentally acceptable hydraulic fluids generally exhibit very good viscosity-temperature behavior, and a lower viscosity level can frequently be used to save drive power during cold starts and to avoid viscosity being too low at higher temperatures. Proper system design is important to the successful use of EA fluids, whether implementing in a new system or converting a system using petroleum-based fluid over to EA fluids.

A properly designed system with a carefully selected EA fluid will have a performance and life comparable to petroleum-based fluids. Also, it is important to monitor the fluid's condition frequently to ensure that it continues to perform as intended. Table 10-1 summarizes some of the important properties to consider when designing a system to use EA fluids.

Table 10-1. Relative Comparisons of Various Types Environmentally Acceptable Fluids.

Parameter	Hydraulic Fluid Type			
	Vegetable Oil (HETG)	**Synthetic Ester (HEES)**	**Polyglycol (HEPG)**	**PAO & Related HEPR**
Viscosity Index ASTM D2270	100-250	120-200	100-200	140-160[1]
Water solubility	Low solubility	Low solubility	Soluble[2]	Low solubility
Miscibility (mixing) with Mineral Oil	Good	Good	Not Miscible[2]	Good[3]
Low temperature performance	Weak	Good	Good	Good
Oxidation resistance	Weak	Good	Good	Good
Hydrolytic stability	Low	Medium	Good	Good
Seal material compatibility	Limited/Good	Limited	Limited	Good
Paint compatibility	Good	Limited/Good	Limited	Good
Additive solubility	Good	Good	Moderate	Limited/Good
Lubricity of base fluid	Good	Good	Limited/Good	Limited/Good
Corrosion resistance	Poor	Limited/Good	Limited	Good
Renewability content	High	Variable	None	Variable
Biodegradability	Good	Good	Moderate/Good	Poor/Moderate/Good
Toxicity, LC50, (Rainbow) Trout, EPA 560/6-82-002	633 - > 5000	>5000	80 - > 5000	100 - >5000

[1]Bosch Rexroth AG Publication No. RE90221/05.10, "Environmentally Acceptable Hydraulic Fluids," p.9

[2]Solubility & miscibility ratings shown are for Polyethylene Glycol type PAGs. Polypropylene Glycol type PAG fluids are not addressed in the table.

[3]Mortier, R.M., Fox, M.F., Orszulik, S.T., Chemistry and Technology of Lubricants, 3d e., Springer Science+ Business Media, p.268, 2010

(a) Hose, seal, and material compatibility. Seal and hose compatibility needs to be determined for any hydraulic fluid used and especially so with EA fluids and synthetic fluids and is a critical step in design. This needs to be one of the first steps in the hydraulic system design and should be done in conjunction with the hydraulic fluid manufacturer. A seal or hose failure can cause significant damage to the entire hydraulic system including failure of hydraulic valves. PAGs are incompatible with polyurethane seals and also a significant number of other seal materials. It is critical to determine seal compatibility for any hydraulic fluid, but especially so with PAG. In general, traditional nitrile seals will have shorter lives when used with EA fluids. However, major suppliers have done extensive testing to determine the most suitable materials for the various types of EA fluids. The component or equipment manufacturer, fluid supplier,

and hose and seal supplier should be consulted to ensure compatibility with all materials in the system.

(b) Pump and motor performance. Pumps and motors may require derating or arranging the pump inlet to ensure that it has positive inlet pressure depending on the type of fluid used. Again, consult with the component and fluid manufacturer or supplier to verify that testing has been performed with the fluid and to confirm whether the results require adjustment of the performance characteristics.

(c) Water contamination. EA fluids are susceptible to water contamination. Dissolved water can accelerate hydrolysis and biological degradation, especially in HETG and partially saturated HEES fluids. This reaction will cause a loss of lubricity and increase in acidity. Water content and acidity levels in EA fluids should be monitored. Water ingress can be controlled with dessicant or isolating flexible reservoir breathers and by maintaining seals in good condition.

(d) Temperature. HETG, or vegetable-based fluids, are susceptible to problems at both extreme low and high temperatures. They tend to crystallize at below rated temperature limits and oxidize at temperatures above rated limits. Fluid oxidation will lead to a rapid decrease in life of the fluid. A rule of thumb is to maintain HETG fluids at below 160 °F (70 °C). Synthetic fluids may be suitable for use to 176 °F (80 °C). Fluid temperatures over 176 °F (80 °C) result in an approximate halving of the fluid service life for every 18 °F (10 °C) increase in temperature. Consult the fluid supplier for temperature limits.

(e) Filtration. While generally filter elements are compatible with EA fluids and filtration requirements are the same as for petroleum-based fluids, the filter change interval may be shorter, particularly for HETG fluids.

(f) Hydraulic fluid changeover. It is important to thoroughly flush a system if changing from a petroleum-based fluid to an EA fluid or from one type of EA fluid to another type of EA fluid. Incompatibility of the new fluid with the old could cause gelling, silting, reduced filterability, or filter blockage. Even if the two fluids are compatible, remnants of the old toxic fluid could impart a degree of toxicity to the new EA fluid. PAG hydraulic fluids are nearly incompatible with any other type of fluid. It is imperative that the system be completely flushed and cleaned when switching to PAG hydraulic fluid.

10-6. Hydraulic Fluid Selection.

a. Hydraulic fluid should be selected to meet the unique requirements and conditions of each fluid power system. Generally, oil selected for use with pumps and motors is acceptable for use with most valves. The selected hydraulic fluid must:

- Contain the necessary additives to ensure excellent antiwear characteristics.
- Have the proper viscosity to maintain adequate sealing and lubrication at all expected operating temperatures of the hydraulic system.
- Include R&O inhibitors for satisfactory system operation. Hydraulic systems for civil works applications often include long piping runs that are exposed to environmental

temperature extremes. Water can condense out of the system at cylinders or at the end of piping runs.

- Be compatible with seals and hoses in the hydraulic system.

b. Environmentally acceptable hydraulic fluids should be selected for applications where the risk of spillage is not acceptable. See preceding paragraph and Chapter 13 for additional recommendations regarding the selection of environmentally acceptable hydraulic fluids.

10-7. Hydraulic Fluid Consolidation. If a site uses multiple types of hydraulic fluid in different systems, it may be desirable to consolidate the types of oil into the least number of types that perform as needed in each system. To do this, each machine or system should be assessed individually by considering the starting viscosity at the minimum ambient temperature, the maximum expected operating and ambient temperatures, and the permissible and optimum viscosity range for individual hydraulic components in the system. The selected replacement oil(s) should operate satisfactorily in the permissible viscosity range and under the minimum and maximum ambient and operating temperatures. When changing oils to the new standard oil, the miscibility with the original oil should be verified and compatibility with existing seals should be verified. At a minimum, a thorough drain, reservoir clean, and filter change should be done. Even then, a small percentage of the original oil will remain and be mixed with the new oil.

10-8. Cleanliness Requirements. Due to the very small clearances and critical nature of hydraulic systems, proper maintenance and cleanliness of these systems is extremely important. Chapter 6 discusses hydraulic system cleanliness codes, oil purification, and filtration. Figure 10-1 shows the recommended maximum threshold ISO 4406 cleanliness levels for Eaton/Vickers equipment, and Table 10-2 lists recommended ISO Cleanliness Codes. In all cases, manufacturer's recommendations should be followed for recommended cleanliness levels. The system component requiring the cleanest fluid should be used to determine the required cleanliness level for the entire system. For systems that use oil that is not 100% petroleum, the target should be set one range code cleaner for each particle size. Also, if a system experiences frequent cold starts at less than 0 °F (-18 °C), intermittent operation with fluid temperatures above 160 °F (70 °C), or high vibration/shock operation, the target cleanliness level should be set one level lower for each particle size. Chapter 6 discusses cleaning and flushing of hydraulic systems. New hydraulic systems should be cleaned and flushed per ASTM D6439, ASTM D4174, and UFGS 35 05 40.14 10, *Hydraulic Power Systems for Civil Works Structures* (May 2014). New hydraulic manifolds should be cleaned and flushed separately to avoid contaminating the entire hydraulic system with machining slag and debris. It may be expedient to patronize a commercial company that specializes in cleaning and flushing of hydraulic systems. Typically, a dedicated flushing and cleaning unit is used to clean and flush the system. These flushing units have dedicated pumps, filters, and reservoirs (Figure 10-2).

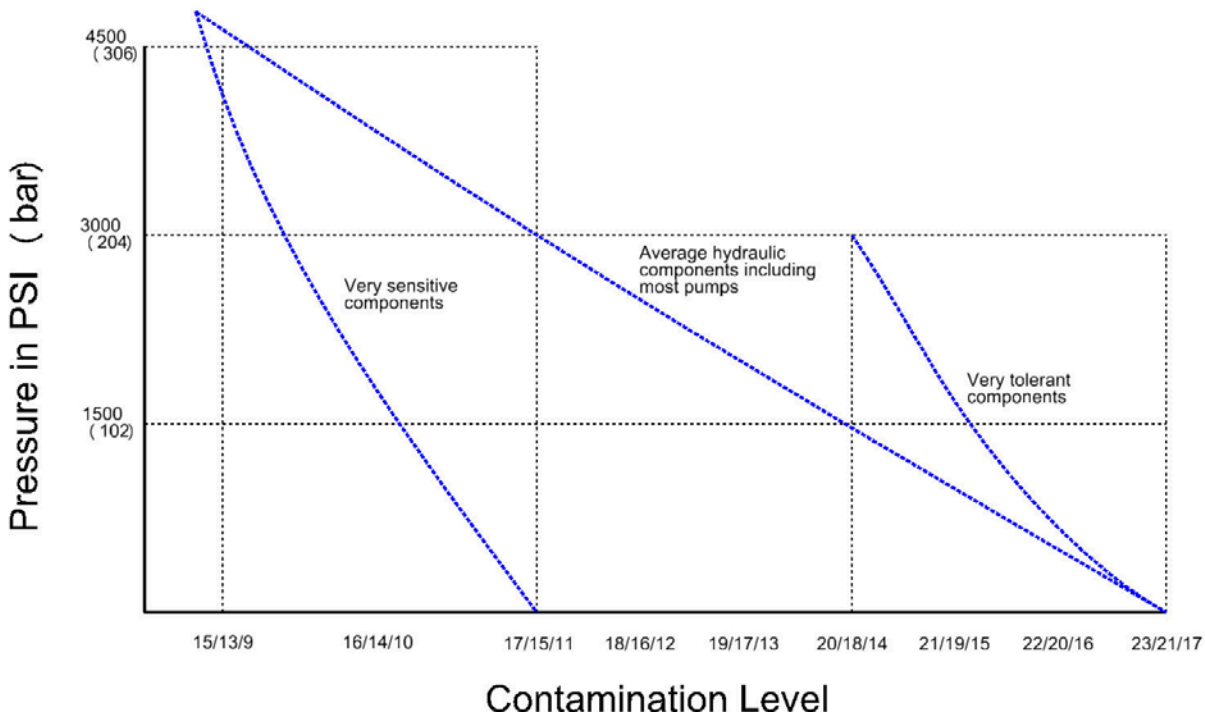

Figure 10-1. Recommended Maximum ISO 4406 Cleanliness Codes, Courtesy of Eaton.

Table 10-2. Recommended ISO Cleanliness Codes.

Component	System Pressure Level		
	<2000 psi (138 bar)	**2000-3000 psi (138 to 207 bar)**	**>3000 psi (207 bar)**
Fixed gear pumps	20/18/15	19/17/15	18/16/13
Fixed vane pumps	20/18/15	19/17/14	18/16/13
Fixed piston pumps	19/17/15	18/16/14	17/15/13
Variable piston pumps	18/16/14	17/15/13	16/14/12
Directional (solenoid) valves		20/18/15	19/17/14
Pressure (modulating) valves		19/17/14	19/17/14
Flow controls		19/17/14	19/17/14
Check valves		20/18/15	20/18/15
Screw-in valves		18/16/13	17/15/12
Prefill valves		20/18/15	19/17/14
Load-sensing directional valves		18/16/14	17/15/12
Hydraulic remote controls		18/16/13	17/15/12
Proportional directional (throttle) valves		18/16/13	17/15/12
Proportional pressure controls		18/16/13	17/15/12
Proportional cartridge valves		18/16/13	17/15/12
Proportional screw-in valves		18/16/13	17/15/12
Servo valves		16/14/11	15/13/10

Component	System Pressure Level		
	<2000 psi (138 bar)	**2000-3000 psi (138 to 207 bar)**	**>3000 psi (207 bar)**
Cylinders	20/18/15	20/18/15	20/18/15
Vane motors	20/18/15	19/17/14	18/16/13
Axial piston motors	19/17/14	18/16/13	17/15/12
Gear motors	21/19/17	20/18/15	19/17/14
Radial piston motors	20/18/14	19/17/13	18/16/13
Swashplate design motors	18/16/14	17/15/13	16/14/12
Source: Courtesy of Eaton			

Figure 10-2. Cleaning and Flushing Unit for Hydraulic Systems.

10-9. Hydraulic Oil Degradation.

a. Effects of Particle Contamination. Excessive contamination will eventually lead to one of three types of failure; catastrophic, intermittent, or degradation. Catastrophic failure occurs when a component, e.g., pump or valve, completely fails to operate as required. This can be caused by large particles becoming lodged in small clearances and jamming items such as pump vanes or valve spools. Fine particles can also cause catastrophic failure through silting. Intermittent failure can occur when large particles become stuck in critical areas, but can be dislodged allowing return to normal function. Degradation failure is most often caused by wear, but also can be caused by corrosion, cavitation, aeration, erosion, or surface fatigue. The effects of degradation will most often be gradual and hard to detect, but eventually lead to catastrophic failure.

b. Water Contamination.

(1) Due to the hygroscopic nature of hydraulic fluid, water contamination is a common occurrence. Water may be introduced by exposure to humid environments, by condensation in the reservoir, and by adding fluid from drums that may have been improperly sealed and exposed to rain. Leaking heat exchangers, seals, and fittings are other potential sources of water contamination.

(2) The water saturation level is different for each type of hydraulic fluid. Below the saturation level, water will completely dissolve in the oil. Oil-based hydraulic fluids have a saturation level between 100 and 1000 ppm (0.01 to 0.1%). This saturation level will be higher at the higher operating temperatures normally experienced in hydraulic systems.

c. Effects of Water Contamination. Hydraulic system operation may be affected when water contamination reaches 1 to 2%.

(1) Reduced viscosity. If the water is emulsified, the fluid viscosity may be reduced and result in poor system response, increased wear of rubbing surfaces, and pump cavitation.

(2) Ice formation. If free water is present and exposed to freezing temperatures, ice crystals may form. Ice may plug orifices and clearance spaces, causing slow or erratic operation.

(3) Chemical reactions.

(a) Galvanic corrosion. Water may act as an electrolyte between dissimilar metals to promote galvanic corrosion. This condition first occurs and is most visible as rust formations on the inside top surface of the fluid reservoir.

(b) Additive depletion. Water may react with oxidation additives to produce acids and precipitates that increase wear and cause system fouling. Antiwear additives such as zinc dithiophosphate (ZDTP) are commonly used for boundary lubrication applications in high pressure pumps, gears, and bearings. However, chemical reaction with water can destroy this additive when the system operating temperature rises above 140 °F (60 °C). The end result is premature component failure due to metal fatigue.

(4) Agglomeration. Water can act as an adhesive to bind small contaminant particles into clumps that plug the system and cause slow or erratic operation. If the condition is serious, the system may fail completely.

(5) Microbiological contamination. Growth of microbes such as bacteria, algae, yeast, and fungi can occur in hydraulic systems contaminated with water. The severity of microbial contamination is increased by the presence of air. Microbes vary in size from 0.2 to 2.0 µm for single cells and up to 200 µmM for multicell organisms. Under favorable conditions, bacteria reproduce exponentially. Their numbers may double in as little as 20 minutes. Unless they are detected early, bacteria may grow into an interwoven mass that will clog the system. A large quantity of bacteria also can produce significant waste products and acids capable of attacking most metals and causing component failure.

(a) Sources of Contamination. There are four primary sources of contamination in hydraulic systems: contaminated new oil, built-in contamination, ingressed contamination, and internally generated contamination. Figure 10-3 illustrates these sources of contamination.

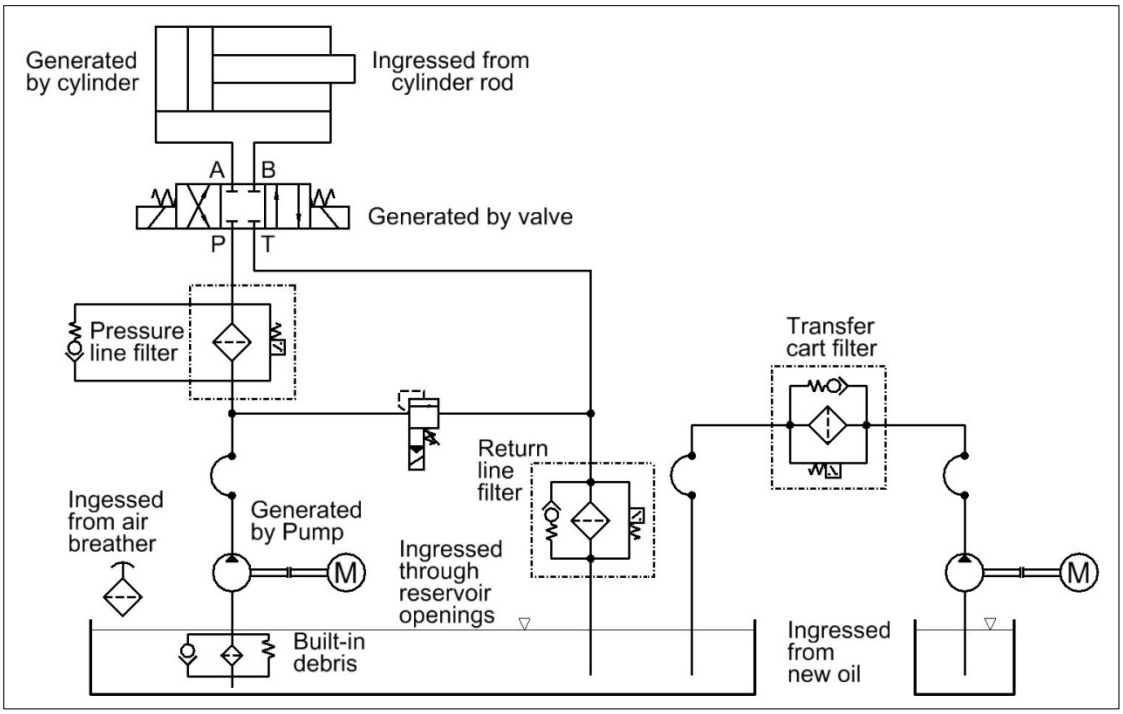

Source: Courtesy of Eaton.

Figure 10-3. Sources of Contamination

(6) Contaminated new oil. Even oil from reputable supplies is often dirtier or contains more water than the minimum system requirement. Oil should be added to a system with a portable transfer cart with a high efficiency filter.

(7) Built-in contamination. New hydraulic systems, components, and piping always have some solid particle contamination. The source of this contamination is often dirt or water that enters the system during installation and fabrication. Without proper precautions, catastrophic component failure can occur within a short time after startup. New piping should be pickled and oiled. All openings from the system to the atmosphere should be covered during installation. Regardless of the precautions taken, some contamination will remain. A system flush is required to minimize this contamination. The success of the system flush depends not only on the effectiveness of the filters, but also the temperature, viscosity, and velocity of the flushing fluid. The temperature, viscosity, and velocity of the flushing fluid determine its turbulence. Achieving turbulence is desired to dislodge the maximum number of contaminant particles. After flushing, an unloaded run-in period is recommended. For further guidance on cleaning, flushing, and purification, consult ASTM D4174, “Cleaning, Flushing, and Purification of Petroleum Fluid Hydraulic Systems.”

(8) Ingressed contamination. Particle and water contamination from the environment can be ingressed into the system. The points of entry of these contaminants can be reservoir vent ports, open or not sealed reservoir access panels, openings of the system for maintenance, and cylinder seals.

Reservoir vent ports should be fitted with at least desiccant air breather filters to exclude contaminant particles and moisture. Ideally, reservoirs should be fitted with flexible reservoir breathers that completely isolate the reservoir from the atmosphere. Good reservoir design and personnel education as to the importance of contamination control can easily avoid the problem of open access plates. Education is also important in preventing contamination during maintenance to emphasize the importance of keeping all ports plugged and performing component disassembly and repair in a clean area. Cylinder rod seals are not designed to be 100% effective in excluding the fine oil film and dirt that clings to the rod. The seals become less effective as they wear. Efforts should be made to protect the rod from dirt as much as possible.

d. Internally Generated Contamination. Components of the hydraulic system, especially pumps, can generate contamination particles as they wear. This type of wear can accelerate quickly if not kept in check and sources of unusually high numbers of particles found. The best method for preventing internally generated contamination is to start with clean oil and keep the oil clean through proper filtration.

e. Degradation of Additives. Hydraulic oils often contain additives for enhancement of viscosity index, increased lubricity and wear reduction, anti-oxidation, anti-corrosion, and antifoaming, among others. These additives can deplete or degrade over time because of age, the presence of contaminants, hydrolysis, or oxidation. Equipment manufacturers generally do not recommend attempting to replenish or add additives back into hydraulic oil and will not warranty components after doing this. A monitoring program should include checking levels of additive elements.

10-10. Purification and Filtration. Filtration rating, filter efficiency, filter sizing, and filter location all are important considerations in achieving a target cleanliness level. A filter's absolute filtration rating is the diameter of the largest hard spherical particle that will pass through a filter under specified laboratory conditions. The data in Figure 10-3 can guide the selection of a filter rating to achieve a target cleanliness. Filter efficiency is expressed in terms of the Beta Ratio. The Beta Ratio of a filter, as determined by the Multipass Filter Performance Test prescribed in ISO 4572, is the ratio of the number of particles upstream of a test filter to the number of the same size particles downstream of the filter. It is recommended to select a filter with a Beta Ratio of at least 100, which translates to an efficiency of 99.00 %. Laboratory conditions are not necessarily a good guide of how a filter will perform under the stress of real world conditions. To perform well under stress, the element pleats should be well supported with a downstream wire mesh. Without the proper support, the media can deform and allow additional particles to pass through.

a. Filter Location. Hydraulic fluid filters are located mainly in three places in a circuit, in the pressure line, the return line, or in a recirculating loop. Pressure filters are recommended where it is desirable to intercept wear particles from the pumps. This includes systems with fixed volume pumps operating at over 2250 psi (155.14 bar) or variable volume pumps operating at over 1500 psi (103.42 bar). They are also recommended in systems with servo or proportional valves with a very low tolerance for contamination. The pressure filter should be considered the only filtration device if it sees maximum pump flow during more than 60% of the system's duty cycle. Disadvantages of pressure filter include that they must be designed for the system pressure and for pressure spikes or fluctuations and the expense that that entails. Also, if a return filter is

not also used, contamination from the system returns to the reservoir and eventually finds its way to the pump before being filtered out. A return line filter is a good choice for the majority of standard hydraulic systems. This is because a high degree of efficiency and life expectancy can be achieved in a more economical filter design. A guideline for filter location is that the return line is an ideal location if it sees at least 20% system volume each minute. Where additional filtration is needed, a recirculating pump and filter can be added to supplement the filter in the main system. Recirculating pumps and filters can also be used by themselves where operating conditions are severe, because of their ability to provide constant pressure and flow through the cylinder and service the filters without affecting the operation of the main system. Figure 10-4 summarizes recommended filter ratings as related to filter location.

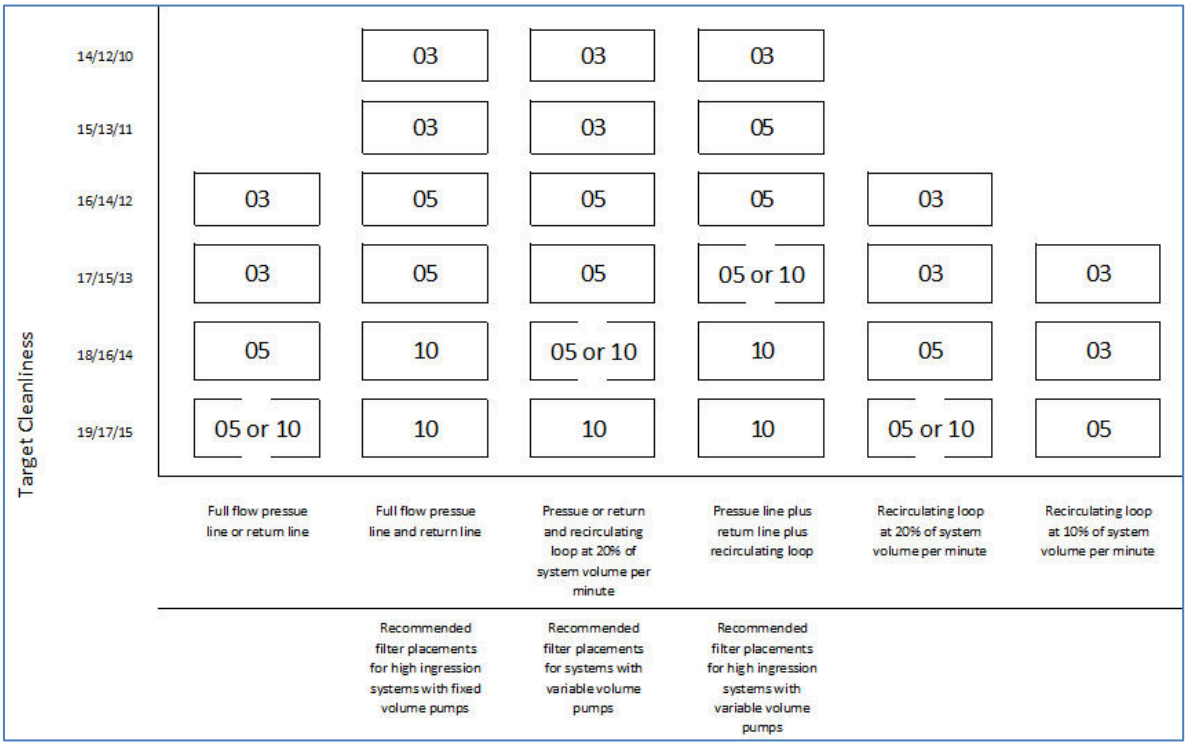

Source: Courtesy of Eaton.

Figure 10-4. Recommended Filter Placement.

10-11. Operating Temperature Considerations. The hydraulic fluid power system should be designed such that it operates satisfactorily in all likely ambient temperatures. Generally, a hydraulic fluid with a suitable viscosity range for the full range of operating conditions can be found. Component manufacturer's data should be consulted to ensure that the fluid viscosity remains in the recommended starting and running viscosity range. Only in the most extreme cold conditions may a reservoir heater be required. See EM 1110-2-2610, *Mechanical and Electrical Design of Navigation Locks and Dams* (30 June 2013), Chapter 3, for guidance on sizing reservoir heating elements. On the upper end of the temperature range, the reservoir should be sized adequately to dissipate heat from all sources, pumps, and valves.

THIS PAGE INTENTIONALLY LEFT BLANK

CHAPTER 11

Grease

11-1. Description. Lubricating grease is a mixture of a lubricating fluid, a thickening agent, and additives. The thickening agent is a material that, in combination with the selected lubricant, will produce the solid to semifluid structure. The primary type of thickeners typically used in grease are metallic soaps. These soaps include lithium, aluminum, clay, polyurea, sodium, and calcium. The soaps are formed by the reaction of animal or vegetable fats or fatty acids with strong alkalies such as calcium or sodium. In some instances, nonsoap thickening agents such as modified clays and polyureas are also used. The fluid lubricant that performs the actual lubrication can be petroleum (mineral) oil, synthetic oil, or biobased oil. The thickener gives grease its characteristic consistency and is sometimes thought of as a “three-dimensional fibrous network” or “sponge” that holds the oil in place. Common thickeners are soaps and organic or inorganic nonsoap thickeners. The majority of greases on the market are composed of mineral oil blended with a soap thickener. Additives enhance performance and protect the grease and lubricated surfaces. Grease has been described as a temperature-regulated feeding device: when the lubricant film between wearing surfaces thins, the resulting heat softens the adjacent grease, which expands and releases oil to restore film thickness.

11-2. Function. The function of grease is to remain in contact with and lubricate moving surfaces without leaking out under gravity or centrifugal action, or squeezing out under pressure. The major practical advantage of grease is that it retains its properties under shear at all temperatures that it is subjected to during use. At the same time, grease must be able to flow into the bearing through grease guns and grease lines. It also must lubricate machinery and bearings and other components as needed, but must not add significantly to the power required to operate the machine, particularly at startup.

a. Applications Suitable for Grease. Grease and oil are not interchangeable. Grease is used when it is not practical or convenient to use oil. The lubricant choice for a specific application is determined by matching the machinery design and operating conditions with desired lubricant characteristics. Grease is generally used for:

(1) Machinery that runs intermittently or that is in storage for an extended period of time. Because grease remains in place, a lubricating film can instantly form.

(2) Machinery that is not easily accessible for frequent lubrication. High quality greases can lubricate isolated or relatively inaccessible components for extended periods of time without frequent replenishing. These greases are also used in sealed-for-life applications such as some electrical motors and gearboxes.

(3) Machinery operating under extreme conditions such as high temperatures and pressures, shock loads, or slow speed under heavy load. Under these circumstances, grease provides thicker film cushions that are required to protect and adequately lubricate, whereas oil films can be too thin and can rupture.

(4) Worn components. Grease maintains thicker films in clearances enlarged by wear and can extend the life of worn parts that were previously oil-lubricated. Thicker grease films also provide noise insulation.

(5) Slow speed bearings and bushings. This is discussed further in Chapter 15. In applications where oil would leak out of the bearing or where the bearing is submerged in water, grease works very well. Grease also has the advantages of requiring less frequent relubrication or replenishment than many oil-lubricated systems, and grease can more readily seal dust and dirt out of the bearing.

b. Functional Properties of Grease. Grease has several important functions:

(1) Grease functions as a sealant to minimize leakage and to keep out contaminants. Because of its consistency, grease acts as a sealant to prevent lubricant leakage and also to prevent entrance of corrosive contaminants and foreign materials. It also acts to keep deteriorated seals effective (whereas an oil would simply seep away).

(2) Grease is easier to contain than oil. Oil lubrication can require an expensive system of circulating equipment and complex retention devices. In comparison, grease, by virtue of its rigidity, is easily confined with simplified, less costly retention devices.

(3) Grease holds solid lubricants in suspension. Finely ground solid lubricants, such as molybdenum disulfide (moly) and graphite, are mixed with grease in high temperature service (over 599 °F [315 °C]) or in extreme high pressure applications. Grease holds solids in suspension while solids will settle out of oils.

(4) The fluid level of grease does not have to be controlled and monitored.

c. Notable Disadvantages of Grease. Grease has several notable disadvantages:

(1) Poor cooling. Due to its consistency, grease cannot dissipate heat by convection like a circulating oil.

(2) Resistance to motion. Grease has more resistance to motion at startup than oil so it is not appropriate for low torque/high speed operation.

(3) Difficulty to handle. Grease is more difficult to handle than oil for dispensing, draining, and refilling. Also, exact amounts of lubricant cannot be as easily metered.

11-3. Grease Characteristics.

Grease is classified by penetration number and by type of soap or other thickener. Penetration classifications have been established by National Lubricating Grease Institute (NLGI) Table 11-1). ASTM D217 and D1403 are the standards for performing penetration tests. A penetration number indicates how easily a grease can be fed to lubricated surfaces (i.e., pumpability) or how well it remains in place. Although no method exists to classify soap thickeners, the producer indicates that soap is in the product. The type of soap thickener indicates probable water resistance and maximum operating temperature and gives some indication of pumpability. Although these are important factors, they are not the only ones of interest. These simple classifications should be regarded as starting requirements to identify a group of appropriate grease types. The final selection must be made on the basis of other information provided in the producer’s specifications. Viscosity of the oil included in a grease must also be considered.

Table 11-1. NLGI Grease Classification.

NLGI Number	ASTM Worked Penetration 0.1 mm (3.28 × 10 -4 ft) at 77 °F (25 °C)	Consistency
000	445 – 475	Semifluid
00	400 – 430	Semifluid
0	355 – 385	Very Soft
1	310 – 340	Soft
2	265 – 295	Common Grease
3	220 – 250	Semi-Hard
4	175 – 205	Hard
5	130 – 160	Very Hard
6	85 – 115	Solid

a. Producer's Product Data for Grease. Producers also provide information and specifications for grease in brochures, pamphlets, handbooks, or on the product container or packaging. Grease specifications normally include soap thickener, penetration, included oil viscosity, and dropping point. The producer may also include ASTM test information on wear, loading, lubrication life, water washout, corrosion, oil separation, and leakage. Grease additives are not usually stated except for solid additives such as molybdenum disulfide or graphite, or that an EP additive is included. If EP or solid additives are used, the producer will often state this emphatically and the product name may indicate the additive. Table 11-2 lists common ASTM tests for the grease characteristics.

b. Apparent Viscosity. At startup, grease has a resistance to motion, implying a high viscosity. However, as grease is sheared between wearing surfaces and moves more quickly, its resistance to flow reduces. Its viscosity decreases as the rate of shear increases. By contrast, an oil at constant temperature would have the same viscosity at startup as it has when it is moving. To distinguish between the viscosity of oil and grease, the viscosity of a grease is referred to as "apparent viscosity." Apparent viscosity is the viscosity of a grease that holds only for the shear rate and temperature at which the viscosity is determined.

c. Bleeding, Migration, Syneresis. Bleeding is a condition when the liquid lubricant separates from the thickener. It is induced by high temperatures and also occurs during long storage periods. Migration is a form of bleeding that occurs when oil in a grease migrates out of the thickener network under certain circumstances. For example, when grease is pumped though a pipe in a centralized lubrication system, it may encounter a resistance to the flow and form a plug. The oil continues to flow, migrating out of the thickener network. As the oil separates from the grease, thickener concentration increases, and plugging gets worse. If two different greases are in contact, the oils may migrate from one grease to the other and change the structure of the grease. Therefore, it is unwise to mix two greases. Syneresis is a special form of bleeding caused by shrinking or rearrangement of the structure due to physical or chemical changes in the thickener.

Table 11-2. ASTM Tests for Grease Characteristics

Grease Characteristic	ASTM Test Method	Description
Apparent viscosity / pumpability	D1092, "Measuring Apparent Viscosity of Lubricating Greases"	Apparent viscosities at 16 shear rates are determined by measuring the hydraulic pressure on a floating piston that forces grease through a capillary tube. Eight different capillary tubes and a 2-speed hydraulic gear pump are used.
Consistency and shear stability	D217, "Cone Penetration of Lubricating Grease" D1403, "Cone Penetration of Lubricating Grease"	Depth, in tenths of a millimeter, a 150-g (0.33-lb) cone penetrates the surface of worked and unworked grease at 77 °F (25 °C) in 5 seconds.
	Using One-Quarter and One-Half Scale Cone Equipment	D1403 is used when only a small amount of grease is available.
	D1831, "Roll Stability of Lubricating Grease"	A 5-kg (11-lb) roller and 50 g (0.11 lb) of grease are put into a 165-rpm revolving chamber for 2 hours at room temperature. The difference in penetrations measured before and after rolling is an indicator of shear stability.
Corrosion and rust resistance	D1743, "Determining Corrosion Preventive Properties of Lubricating Greases"	A grease-packed bearing is spun for 1-minute at 1750 rpm. Excess grease is thrown off and a thin layer remains on bearing surfaces. The bearing is exposed to water and stored for 48 hours at 125 °F (52 °C) and 100% humidity. It is then cleaned and examined for corrosion.
	D4048, "Detection of Copper Corrosion from Lubricating Grease"	A copper strip is immersed in grease inside a covered jar and heated in an oven or liquid bath for a specified time. The strip is removed, washed, and compared and classified using the ASTM Copper Strip Corrosion Standards.
Dropping point	D566, "Dropping Point of Lubricating Grease" D2265, "Dropping Point of Lubricating Grease over Wide Temperature Range"	Grease and a thermometer are placed in a cup inside a test tube and heated until a drop falls through the cup. That temperature is the dropping point. The test tube assembly is heated in an oil bath for D566 and inside an aluminum block oven for D2265.
Evaporation	D972, "Evaporation Loss of Lubricating Greases and Oils" D2595, "Evaporation Loss of Lubricating Greases over Wide Temperature Range"	Two liters per minute of heated air is passed over grease inside a chamber for 22 hours. Temperature range is 212 - 302 °F (100 – 150 °C) for D972 and 200 – 599 °F (93 – 315 °C) for D2595. Evaporation is calculated from grease weight loss, in percent.

Grease Characteristic	ASTM Test Method	Description
Heat resistance /Consistency	D3232, "Measurement of Consistency of Lubricating Greases at High Temperatures" Note: The ASTM D3232 Standard has now been withdrawn – no replacement	Can also indicate flow at high temperatures. Grease in a cylindrical opening in an aluminum block is heated at a rate of 10 °F (5 °C)/min while a trident probe turns at 20 rpm in the grease. A Brookfield viscometer attached to the probe measures torque at temperature increments. From this, apparent viscosities are determined at different temperatures.
Leakage	D1263, "Leakage Tendencies of Automotive Wheel Bearing Greases" Note: The ASTM D1263 has now been withdrawn – no replacement	A seal-less, grease-packed wheel bearing encircled by a collector ring is spun for 6 hours at 660 rpm at 221 °F (105 °C). Grease thrown off into the ring is weighed and leakage is determined.
Oxidation Stability	D942, "Oxidation Stability of Lubricating Greases by the Oxygen Bomb Method"	Indicates oxidation from storage when grease charged with oxygen at 110 psi (7.58 bar) is sealed in a "bomb" at 210 °F (99 °C). As grease oxidizes, it absorbs oxygen. Pressure is recorded at time intervals and degree of oxidation is determined by the corresponding drop in oxygen pressure.
	D3336, "Performance Characteristics of Lubricating Greases in Ball Bearings at Elevated Temperatures"	There are no ASTM tests for oxidation in service, but this test relates oxidation stability to failure rate of bearings at desired elevated temperatures.
Water Resistance	D1264, "Determining the Water Washout Characteristics of Lubricating Greases"	Measures grease washout of a bearing turning at 600 rpm with water flowing at 5 mL/sec for 1 hour at 100 °F (37.7 °C) and 175 °F (79 °C).
	D4049, "Determining the Resistance of Lubricating Grease to Water Spray"	Measures removal of grease 0.8 mm (1/32 in) thick on a plate by water through a nozzle for 5 minutes at 100 °F (38°C) and 40 psi (2.76 bar).
Wear Resistance	D2266, "Wear Preventive Characteristics of Lubricating Grease (Four-Ball Method)"	A rotating steel ball is pressed against three, grease-coated, stationary steel balls for 60 minutes. Scar diameters on the three stationary balls are relative measures of wear. Balls are 0.5 in. (12.7 mm). Applied load is 40 kgf (392N) rotating at 1200 rpm. Temperature is 167 °F (75 °C).
	D2596, "Measurement of Extreme Pressure Properties of Lubricating Grease (Four-Ball Method)"	Same steel ball setup as above, but load is incrementally increased every 10 seconds until seizure occurs. This is the weld point. Load wear index is then calculated. Maximum load is 800 kgf (7845 N) rotating at 1770 rpm. Temperature is 80 °F (27 °C).

Grease Characteristic	ASTM Test Method	Description
	D2509, "Measurement of Extreme Pressure Properties of Lubricating Grease (Timken Method)"	The outer edge of a continuously grease-fed bearing race rotates at 800 rpm and rubs against a fixed steel block for 10 minutes. Successive runs are made with increasingly higher loads and any surface scoring is reported. Grease is applied at 77 °F (25 °C). The Timken OK load is the highest load in which no scoring occurs.

d. Consistency, Penetration, and NLGI Numbers. The consistency, or rigidity, of a grease is a measure of its resistance to deformation by an applied force and is, in most cases, the most important characteristic of a grease. A grease that is too stiff may not feed into areas requiring lubrication, while a grease that is too fluid may leak out. Grease consistency depends on the type and amount of thickener used and the viscosity of its base oil. A grease's consistency is its resistance to deformation by an applied force. The measure of consistency is called penetration. A grease's consistency depends on its base oil's viscosity and the type and amount of thickening agent used. Consistency is measured in terms of the depth in tenths of a millimeter that a standard cone will sink into a grease under prescribed conditions and is referred to as the penetration number. Penetration depends on whether the consistency has been altered by handling or working. ASTM D217 and D1403 methods measure penetration of unworked and worked greases. To measure penetration, a cone of given weight is allowed to sink into a grease for 5 seconds at a standard temperature of 77 °F (25 °C). The depth, in tenths of a millimeter, to which the cone sinks into the grease is the penetration. A penetration of 100 would represent a solid grease while one of 450 would be semifluid. The NLGI has established consistency numbers or grade numbers, ranging from 000 to 6, corresponding to specified ranges of penetration numbers. Table 11-1 lists the NLGI grease classifications along with a description of the consistency of each classification.

e. Contaminants. Greases tend to hold solid contaminants on their outer surfaces and protect lubricated surfaces from wear. If the contamination becomes excessive or eventually works its way down to the lubricated surfaces, the reverse occurs: the grease retains abrasive materials at the lubricated surface and wear occurs.

f. Corrosion and Rust Resistance. This denotes the ability of grease to protect metal parts from chemical attack. The natural resistance of a grease depends on the thickener type. Corrosion resistance can be enhanced by corrosion and rust inhibitors.

g. Dropping Point. Dropping point is an indicator of the heat resistance of grease. At or above the dropping point, a grease will act as a fluid. As grease temperature rises, penetration increases until the grease liquefies and the desired consistency is lost. Dropping point is the temperature at which a grease becomes fluid enough to drip. The dropping point indicates the upper temperature limit at which a grease retains its structure, not the maximum temperature at which a grease may be used. A few greases have the ability to regain their original structure after cooling down from the dropping point.

h. Evaporation. The base oil viscosity and temperature significantly affects the grease evaporation rates. Excessive oil evaporation causes grease to harden due to increased thickener concentration. Therefore, higher evaporation rates require more frequent relubrication.

i. Fretting Wear and False Brinelling. Fretting is friction wear of components at contact points caused by minute oscillation. The oscillation is so minute that grease is displaced from between parts, but is not allowed to flow back in. Localized oxidation of wear particles results and wear accelerates. In bearings, this localized wear appears as a depression in the race caused by oscillation of the ball or roller. The depression resembles that which occurs during Brinell hardness determination, hence the term "false brinelling." An example would be fretting wear of automotive wheel bearings when a car is transported by train. The car is secured, but the vibration of the train over the tracks causes minute oscillation resulting in false brinelling of the bearing race.

j. Oxidation Stability. This is the ability of a grease to resist a chemical union with oxygen. ASTM D942 is one test that can be performed. The reaction of grease with oxygen produces insoluble gum, sludges, and lacquer-like deposits that cause sluggish operation, increased wear, and reduction of clearances. Prolonged high temperature exposure accelerates oxidation in greases. This property affects the grease service life. The Oxidation Induction Time Test, ASTM Test Method D5483, "Oxidation Induction Time of Lubricating Greases by Pressure Differential Scanning Calorimetry (PDSC)," can also be performed. A small quantity of grease (3.0 ±0.2 mg) is weighed into sample pan and placed in a test cell. The cell is heated to specified temperature (i.e., 311, 356, or 410 °F [155, 180, or 210 °C]) and then pressurized with oxygen. The cell is held at the test temperature until exothermic reaction occurs. The extrapolated onset time is measured and reported as oxidation induction time for the grease under the specified test temperature. Oxidation induction time, as determined under the conditions of this test method, can be used as an indication of oxidation stability. A longer induction time indicates better oxidation stability of grease.

k. Pumpability and Slumpability. Pumpability is the ability of a grease to be pumped or pushed through a system at very low temperatures. More practically, pumpability is the ease with which a pressurized grease can flow through lines, nozzles, and fittings of grease-dispensing systems. Slumpability, or feedability, is its ability to be drawn (sucked) into a pump. Fibrous greases tend to have good feedability but poor pumpability. Buttery-textured greases tend to have good pumpability but poor feedability.

l. Shear Stability. Grease consistency may change as it is mechanically worked or sheared between wearing surfaces. A grease's ability to maintain its consistency when worked is its shear stability or mechanical stability. A grease that softens as it is worked is called thixotropic. Greases that harden when worked are called rheopectic.

m. High Temperature Effects. The base oil viscosity significantly affects the grease evaporation rates. Grease, by its nature, cannot dissipate heat by convection like a circulating oil. Consequently, without the ability to transfer away heat, excessive temperatures result in accelerated oxidation or even carbonization where grease hardens or forms a crust. Effective grease lubrication depends on the grease's consistency and dropping point. High temperatures induce softening and bleeding, causing grease to flow away from needed areas. The mineral oil

in grease can flash, burn, or evaporate at temperatures at high temperatures. High temperatures, above 165 to 175 °F (73 to 79 °C), can dehydrate certain greases such as calcium soap grease and cause structural breakdown. The higher evaporation and dehydration rates at elevated temperatures require more frequent grease replacement.

n. Low Temperature Effects. If the temperature of a grease is lowered enough, it will become so viscous that it can be classified as a hard grease. Pumpability suffers and machinery operation may become impossible due to torque limitations and power requirements. The temperature at which this occurs depends on the shape of the lubricated part and the power being supplied to it. As a guideline, the base oil's pour point is considered the low temperature limit of a grease.

o. Texture. Texture is observed when a small sample of grease is pressed between thumb and index finger and slowly drawn apart. Texture can be described as:

- Brittle. The grease ruptures or crumbles when compressed.
- Buttery. The grease separates in short peaks with no visible fibers.
- Long fiber. The grease stretches or strings out into a single bundle of fibers.
- Resilient. The grease can withstand moderate compression without permanent deformation or rupture.
- Short fiber. The grease shows short break-off with evidence of fibers.
- Stringy. The grease stretches or strings out into long, fine threads, but with no visible evidence of fiber structure.

p. Water Resistance. This is the ability of a grease to withstand the effects of water with no change in its ability to lubricate. A soap/water lather may suspend the oil in the grease, forming an emulsion that can wash away or, to a lesser extent, reduce lubricity by diluting and changing grease consistency and texture. Rusting becomes a concern if water is allowed to contact iron or steel components.

11-4. Fluid Lubricants. Fluid lubricants used to formulate grease are normally petroleum or synthetic oils. For petroleum oils in general, naphthenic oils tend to chemically mix better with soaps and additives and form stronger structures than paraffinic oils. Synthetic oils are higher in first cost, but are effective in high temperature and low temperature extremes. With growing environmental concerns, biobased oils, and certain synthetic oils are also being used in applications requiring nontoxic or biodegradable greases. Separate chapters in this manual are devoted to lubricating oils and environmentally acceptable oils. They describe the characteristics that each type of oil brings to grease. The base oil selected in formulating a grease should have the same characteristics as if the equipment is to be lubricated by oil. For instance, lower viscosity base oils are used for grease applications at lower temperatures or high speeds and light loads, whereas higher viscosity base oils are used for higher temperatures or low speed and heavy load applications.

11-5. Soap Thickeners. Dispersed in its base fluid, a soap thickener gives grease its physical character. Soap thickeners not only provide consistency to grease, they affect desired properties

such as water and heat resistance and pumpability. They can affect the amount of an additive, such as a rust inhibitor, required to obtain a desired quality. The soap influences how a grease will flow, change shape, and age as it is mechanically worked and at temperature extremes. Each soap type brings its own characteristic properties to a grease. The name of the soap thickener refers to the metal (calcium, lithium, etc.) from which the soap is prepared. The principal ingredients in creating a soap are a fatty acid and an alkali. Fatty acids can be derived from animal fat such as beef tallow, lard, butter, fish oil, or from vegetable fat such as olive, castor, soybean, or peanut oils. The most common alkalies used are the hydroxides from earth metals such as aluminum, calcium, lithium, and sodium. Table 11-3 lists some properties of the most common soap thickeners. Soap is created when a long-carbon-chain fatty acid reacts with the metal hydroxide. The metal is incorporated into the carbon chain and the resultant compound develops a polarity. The polar molecules form a fibrous network that holds the oil. Thus, a somewhat rigid gel-like material “grease” is developed. Soap concentration can be varied to obtain different grease thicknesses. Furthermore, viscosity of the base oil affects thickness as well. Since soap qualities are also determined by the fatty acid from which the soap is prepared, not all greases made from soaps containing the same metals are identical.

Table 11-3. Simple Soap Thickener Characteristics.

Type	**Dropping Point**	**Max. Operating Temperature**	**Water Resistance**
Lithium	347 °F (175 °C)	302 °F (150 °C)	Good
Calcium	302 °F (150 °C)	248 °F (120 °C)	Good
Aluminum	230 °F (110 °C)	176 °F (80 °C)	Good
Sodium	446 °F (230 °C)	302 °F (150 °C)	Poor
Barium	392 °F (200 °C)	302 °F (150 °C)	Good

11-6. Complex Soap.

a. The high temperatures generated by modern equipment necessitated an increase in the heat resistance of normal soap-thickened greases. As a result, “complex” soap greases were developed. The dropping point of a complex grease is at least 100 °F (37.7 °C) higher than its normal soap-thickened counterpart, and its maximum usable temperature is around 350 °F (177 °C). Complex soap greases are limited to this temperature because the mineral oil can flash, evaporate, or burn above that temperature. Generally, complex greases have good all-around properties and can be used in multipurpose applications. For extreme operating conditions, complex greases are often produced with solid lubricants and use more highly refined or synthetic oils.

b. A “complexing agent” made from a salt of the named metal is the additional ingredient in forming a complex grease. A complex soap is formed by the reaction of a fatty acid and alkali to form a soap, and the simultaneous reaction of the alkali with a short-chain organic or inorganic acid to form a metallic salt (the complexing agent). Basically, a complex grease is

made when a complex soap is formed in the presence of a base oil. Common organic acids are acetic or lactic, and common inorganic acids are carbonates or chlorides.

11-7. Additives. Surface-protecting and performance-enhancing additives that can effectively improve the overall performance of a grease are described in Chapter 5. Solid lubricants such as molybdenum disulfide and graphite are added to grease in certain applications for high temperatures (above 599 °F [315 °C]) and extreme high pressure applications. Incorporating solid additives requires frequent grease changes to prevent accumulation of solids in components (and the resultant wear). Properties of solid lubricants are described in Chapter 12. Not mentioned in other chapters are dyes that improve grease appearance and that are used for identification purposes.

11-8. Types of Greases. The most common greases are described below.

a. Calcium Grease.

(1) Calcium or lime grease, the first of the modern production greases, is prepared by reacting mineral oil with fats, fatty acids, a small amount of water, and calcium hydroxide (also known as hydrated lime). The water modifies the soap structure to absorb mineral oil. Because of water evaporation, calcium grease is sensitive to elevated temperatures. It dehydrates at temperatures around 175 °F (79 °C) at which its structure collapses, resulting in softening and, eventually, phase separation. Greases with soft consistencies can dehydrate at lower temperatures while greases with firm consistencies can lubricate satisfactorily to temperatures around 200 °F (93 °C). In spite of the temperature limitations, lime grease does not emulsify in water and is excellent at resisting "washout." Also, its manufacturing cost is relatively low. If a calcium grease is prepared from 12-hydroxystearic acid, the result is an anhydrous (waterless) grease. Since dehydration is not a concern, anhydrous calcium grease can be used continuously to a maximum temperature of around 230 °F (110 °C).

(2) Calcium complex grease is prepared by adding the salt calcium acetate. The salt provides the grease with extreme pressure characteristics without using an additive. Dropping points greater than 500 °F (260 °C) can be obtained and the maximum usable temperature increases to approximately 350 °F (177 °C). With the exception of poor pumpability in high pressure centralized systems, where caking and hardening sometimes occur calcium complex greases have good all-around characteristics that make them desirable multipurpose greases.

b. Sodium Grease. Sodium grease was developed for use at higher operating temperatures than the early hydrated calcium greases. Sodium grease can be used at temperatures up to 250 °F (121 °C), but it is soluble in water and readily washes out. Sodium is sometimes mixed with other metal soaps, especially calcium, to improve water resistance. Although it has better adhesive properties than calcium grease, the use of sodium grease is declining due to its lack of versatility. It cannot compete with water resistant, more heat-resistant multipurpose greases. It is, however, still recommended for certain heavy duty applications and well-sealed electric motors.

c. Aluminum Grease. Aluminum grease is normally clear and has a somewhat stringy texture, more so when produced from high viscosity oils. When heated above 175 °F (79 °C), this stringiness increases and produces a rubberlike substance that pulls away from metal

surfaces, reducing lubrication and increasing power consumption. Aluminum grease has good water resistance, good adhesive properties, and inhibits rust without additives, but it tends to be short-lived. It has excellent inherent oxidation stability, but relatively poor shear stability and pumpability. Aluminum complex grease has a maximum usable temperature of almost 212 °F (100 °C) higher than aluminum soap greases. It has good water-and-chemical resistance, but tends to have shorter life in high temperature, high speed applications.

d. Lithium Grease. Smooth, buttery-textured lithium grease is by far the most popular when compared to all others and is used extensively within USACE. The normal grease contains lithium 12-hydroxystearate soap. It has a dropping point around 400 °F (204 °C) and can be used at temperatures up to about 275 °F (135 °C). It can also be used at temperatures as low as –31 °F (–35 °C). It has good shear stability and a relatively low coefficient of friction, which permits higher machine operating speeds. It has good water resistance, but not as good as that of calcium or aluminum. Pumpability and resistance to oil separation are good to excellent. It does not naturally inhibit rust, but additives can provide rust resistance. Antioxidants and extreme pressure additives are also responsive in lithium greases. Lithium complex grease and lithium soap grease have similar properties except the complex grease has superior thermal stability as indicated by a dropping point of 500 °F (260 °C). It is generally considered to be the nearest thing to a true multipurpose grease.

e. Other Greases. Thickeners other than soaps are available to make greases. Although most of these are restricted to very special applications, two nonsoap greases are worthy of mention. One is organic, the other inorganic.

(1) Polyurea grease. Polyurea is the most important organic nonsoap thickener. It is a low-molecular-weight organic polymer produced by reacting amines (an ammonia derivative) with isocyanates, which results in an oil-soluble chemical thickener. Polyurea grease has outstanding resistance to oxidation because it contains no metal soaps (which tend to invite oxidation). It effectively lubricates over a wide temperature range of –4 to 350 °F (–20 to 177 °C) and has long life. Water resistance is good to excellent, depending on the grade. It works well with many elastomer seal materials. It is used with all types of bearings, but has been particularly effective in ball bearings. Its durability makes it well suited for sealed-for-life bearing applications. Polyurea complex grease is produced when a complexing agent, most commonly calcium acetate or calcium phosphate, is incorporated into the polymer chain. In addition to the excellent properties of normal polyurea grease, these agents add inherent extreme pressure and wear protection properties that increase the multipurpose capabilities of polyurea greases.

(2) Organo-clay. Organo-clay is the most commonly used inorganic thickener. Its thickener is a modified clay, insoluble in oil in its normal form, but through complex chemical processes, converts to platelets that attract and hold oil. Organo-clay thickener structures are amorphous and gel-like rather than the fibrous, crystalline structures of soap thickeners. This grease has excellent heat resistance since clay does not melt. Maximum operating temperature is limited by the evaporation temperature of its mineral oil, which is around 350 °F (177 °C). However, with frequent grease changes, this multipurpose grease can operate for short periods at temperatures up to its dropping point, which is about 500 °F (260 °C). A disadvantage is that greases made with higher viscosity oils for high thermal stability will have poor low temperature performance. Organo-clay grease has excellent water resistance, but requires additives for oxidation and rust resistance. Work

stability is fair to good. Pumpability and resistance to oil separation are good for this buttery-textured grease.

11-9. Compatibility.

a. Greases are considered incompatible when the physical or performance characteristics of the mixed grease falls below original specifications. In general, greases with different chemical compositions should not be mixed. Mixing greases of different thickeners can form a mix that is too firm to provide sufficient lubrication, or more commonly, a mix that is too soft to stay in place.

b. The mixing of two greases many times will result in a product inferior to either of the component greases. The mixture may be softer in consistency, less resistant to heat, and have a lower shear stability. When this happens, the greases are considered incompatible. Incompatibility of greases is normally a result of the incompatibility of the thickening agents of the component greases. Table 11-4 lists the compatibility of some of the most common types of greases. Note that this table is intended only as a guide. In some instances, grease types listed as compatible may be incompatible because of adverse reactions between the thickening agent of one grease and additives in the other. In rare cases, greases with the same thickening agent, but made by different manufacturers, may be incompatible because of the additives. If it becomes necessary to change the type of grease used in a piece of equipment, the bearing housing or the area being greased should be thoroughly cleaned to remove all of the old grease. If this is not possible, as much of the old grease as possible should be flushed out by the new grease during the initial application and the greasing frequency should be increased until it is determined that all of the old grease has been purged from the system.

c. Combining greases of different base oils can produce a fluid component that will not provide a continuous lubrication film. Additives can be diluted when greases with different additives are mixed. Mixed greases may become less resistant to heat or have lower shear stability. If a new brand of grease must be introduced, the component part should be disassembled and thoroughly cleaned to remove all of the old grease. If this is not practical, the new grease should be injected until all traces of the prior product are flushed out. Also, the first grease changes should be more frequent than normally scheduled.

11-10. Grease Application Guide. When selecting a grease, it is important to determine the properties required for the particular application and match them to a specific grease. Table 11-5 includes a grease application guide that lists the most common greases, their usual properties, and important uses. Some of the ratings given are subjective and can vary significantly from supplier to supplier. Table 11-2 also lists common ASTM tests for the grease characteristics.

a. Storage Requirements. Characteristics of some greases may change in storage. A grease may bleed, change consistency, or pick up contaminants during storage. Because some greases may be more susceptible to the effects of prolonged storage than others, the manufacturer or distributor should be consulted for information on the maximum shelf life of a particular grease. To be safe, no more than a 1-year supply of a grease should be in storage at any time. Grease should be stored in a tightly sealed container to prevent dust, moisture, or other contamination,

and stored where it will not be exposed to excessive heat, such as near furnaces or heaters. Excessive heat may cause the grease to bleed and oxidize.

b. Table 11-6 lists recommended grease types for radial gates, wicket gates, and butterfly valves. Chapter 16 of this manual also discusses lubrication and grease applications for a variety of gate types. Grease for the slow-moving, highly loaded, bronze bushings such as those found on tainter gates, wicket gates, radial gates, and butterfly valves should be adhesive, water resistant, able to withstand high bearing pressures, and of a consistency that can be pumped at the lowest temperature encountered. Usually, a grease with extreme pressure or antiwear capabilities is specified. Note that the term “extreme pressure” is used fairly liberally by grease manufacturers so the presence of extreme pressure additives and extreme pressure properties should be verified. Because the grease is lubricating a bronze bearing, it should not be corrosive to copper.

Table 11-4. Grease Compatibility from Bureau of Reclamation FIST 2-4.

Grease	Aluminum Complex	Barium	Calcium	Calcium Complex	Calcium 12 Hydroxy	Calcium Stearate	Calcium Sulfanate	Clay	Lithium	Lithium Complex	Lithium 12 Hydroxy	Lithium Stearate	Polyrea	Sodium
Aluminum Complex	C	I	I	I	C	I	B	I	I	C	I	I	I	I
Barium	I	C	I	I	C	NI	B	I	I	I	I	NI	I	I
Calcium	I	I	C	B	C	NI	I	C	C	C	B	NI	I	I
Calcium Complex	I	I	B	C	B	I	C	I	I	C	I	I	C	I
Calcium 12 Hydroxy	C	C	C	B	C	C	NI	B	C	C	C	C	I	I
Calcium Stearate	I	NI	NI	I	C	C	B	C	NI	C	B	C	I	NI
Calcium Sulfanate	B	B	I	C	NI	B	C	B	C	C	B	B	B	I
Clay	I	I	C	I	B	C	B	C	I	I	I	I	I	I
Lithium	I	I	C	I	C	NI	C	I	C	C	C	NI	I	B
Lithium Complex	C	I	C	C	C	C	C	I	C	C	C	C	I	B
Lithium 12 Hydroxy	I	I	B	I	C	B	B	I	C	C	C	C	I	I
Lithium Stearate	I	NI	NI	I	C	C	B	I	NI	C	C	C	I	NI
Polyrea	I	I	I	C	I	I	B	I	I	I	I	I	C	I
Sodium	I	I	I	I	I	NI	I	I	B	B	I	NI	I	C

B – Borderline compatibility
C – Compatible
I – Incompatible
NI – No information on compatibility

Table 11-5. Grease Application Guide.

Properties	**Aluminum**	**Sodium**	**Calcium Conventional**	**Calcium Anhydrous**	**Lithium**	**Aluminum Complex**	**Calcium Complex**	**Lithium Complex**	**Polyurea**	**Organo-Clay**
Dropping point (°C)	110	163-177	096-104	135-143	177-204	260+	260+	260+	243	260+
Dropping point (°F)	230	325-350	205-220	275-290	350-400	500+	500+	500+	470	500+
Maximum usable temperature (°C)	79	121	93	110	135	177	177	177	177	177
Maximum usable temperature (°F)	175	350	200	230	275	350	350	350	350	350
Water resistance	Good to excellent	Poor to fair	Good to excellent	Excellent	Good	Good to excellent	Fair to excellent	Good to excellent	Good to excellent	Fair to excellent
Work stability	Poor	Fair	Fair to good	Good to excellent	Good to excellent	Good to excellent	Fair to good	Good to excellent	Poor to good	Fair to good
Oxidation stability	Excellent	Poor to good	Poor to excellent	Fair to excellent	Fair to excellent	Fair to excellent	Poor to good	Fair to Excellent	Good to excellent	Good
Protection against rust	Good to excellent	Good to excellent	Poor to excellent	Poor to excellent	Poor to excellent	Good to excellent	Fair to excellent	Fair to Excellent	Fair to excellent	Poor to excellent
Pumpability (in centralized system)	Poor	Poor to fair	Good to excellent	Fair to excellent	Fair to excellent	Fair to good	Poor to fair	Good to Excellent	Good to excellent	Good
Oil separation	Good	Fair to good	Poor to good	Good	Good to excellent	Good to excellent	Good to excellent	Good to Excellent	Good to excellent	Good to excellent
Appearance	Smooth and Clear	Smooth to fibrous	Smooth and buttery	Smooth and buttery	Smooth and buttery	Smooth and buttery	Smooth and buttery	Smooth and Buttery	Smooth and buttery	Smooth and buttery
Other properties		Adhesive & cohesive	EP grades available	EP grades available	EP grades available, reversible	EP grades available, reversible	EP grades antiwear inherent	EP grades Available	EP grades available	
Principal Uses	Thread lubricants	Rolling contact economy	General uses for economy	Military multiservice	Multi- service[1] Automotive & industrial	Multi-service Industrial	Multi- service Automotive & industrial	Multi- Service Automotive & industrial	Multi- service Automotive & industrial	High temp. (frequent relube)

[1] Multiservice includes rolling-contact bearings, plain bearings, and others.

Reference: NLGI Lubricating Grease Guide, 4th ed.

Table 11-6. Recommended Grease Properties for Wicket Gates, Radial Gates, Butterfly Valves (Recommended Grease Properties from Bureau of Reclamation FIST 2-4.)

Grease Property	**Purpose of Property**	**ASTM Test**	**ASTM Test Desired Result**	**Maximum Allowable**
Lubricity	Low static and kinetic friction for bronze on steel	G99-05	Coefficient of static friction, fs (breakaway), 0.10, (b) coefficient of kinetic friction at 0.2 inch/min, F_k, 0.10	Fs, 0.15, (b) F_k, 0.12
Rust inhibitors	Prevent rust on steel	D1743-01	Pass, no rusting of steel after 48 hours	Pass
Copper Corrosion	Low corrosion of bronze bushing	D4048-02	1 to 4B	4C
Wear and scuffing resistance	Prevent scuffing between steel and bronze	G99-03	No scuffing or transfer of metal of bronze to steel	No scuffing
Water washout	Resists washout by water	D1264-00	0% washout	1.9%
Consistency	Easy to pump, but thick enough to stay in bushing	D217-02	NLGI 1 to 1.5	NLGI 2
Oxidation stability	Resistance to oxidation	D942-02	Pass, no acid formation or discoloration	Pass
Oil separation	Indication of stability in storage	D1742-94	Less than 0.1% bleeding of oil	1.6% in 24 hours

THIS PAGE INTENTIONALLY LEFT BLANK

CHAPTER 12

Solid Lubricants and Self-Lubricated Materials

12-1. General. This chapter covers both solid lubrication (Paragraph 12-2) and self-lubricated materials (Paragraphs 12-3 through 12-8). Solid lubricants are common as standalone lubricants in primarily dry environments and as additives to fluids and greases. Self-lubricated materials use solid lubricants to provide their lubrication. Self-lubricated materials have been used in a variety of USACE civil works lock and dam bearing applications.

12-2. Solid Lubrication. A solid lubricant is a material used as powder or thin film to provide protection from damage during relative movement and to reduce friction and wear. Other terms commonly used for solid lubrication include dry lubrication, dry film lubrication, and solid film lubrication. Although these terms imply that solid lubrication takes place under dry conditions, fluids are frequently used as a medium or as a lubricant with solid additives. Perhaps the most commonly used solid lubricants are the inorganic compounds graphite and molybdenum disulfide (MoS_2) and the polymer material polytetrafluoroethylene (PTFE).

a. Characteristics. The properties important in determining the suitability of a material for use as a solid lubricant include:

(1) Crystal structure. Solid lubricants such as graphite and MoS_2 possess a lamellar crystal structure with inherently low shear strength. Although the lamellar structure is very favorable for materials such as lubricants, non-lamellar materials also provide satisfactory lubrication.

(2) Thermal stability. Thermal stability is very important since one of the most significant uses for solid lubricants is in high temperature applications not tolerated by other lubricants. Good thermal stability ensures that the solid lubricant will not undergo undesirable phase or structural changes at high or low temperature extremes.

(3) Oxidation stability. The lubricant should not undergo undesirable oxidative changes when used within the applicable temperature range.

(4) Volatility. The lubricant should have a low vapor pressure for the expected application at extreme temperatures and in low pressure conditions.

(5) Chemical reactivity. The lubricant should form a strong, adherent film on the base material.

(6) Mobility. The life of solid films can only be maintained if the film remains intact. Mobility of adsorbates on the surface promotes self-healing and prolongs the endurance of films.

(7) Melting point. If the melting point is exceeded, the atomic bonds that maintain the molecular structure are destroyed, rendering the lubricant ineffective.

(8) Hardness. Some materials with suitable characteristics, such as those already noted, have failed as solid lubricants because of excessive hardness. A maximum hardness of 5 on the Mohs scale appears to be the practical limit for solid lubricants.

(9) Electrical conductivity. Certain applications, such as sliding electric contacts, require high electrical conductivity while other applications, such as insulators making rubbing contact, require low conductivity.

b. Applications. Generally, solid lubricants are used in applications not tolerated by more conventional lubricants. The most common conditions requiring use of solid lubricants include:

(1) Extreme temperature and pressure conditions. These are defined as high temperature applications up to 3500 °F (1926 °C), where other lubricants are prone to degradation or decomposition; extremely low temperatures, down to –350 °F (–212 °C), where lubricants may solidify or congeal; and high-to-full vacuum applications, such as outer space, where lubricants may volatilize.

(2) As additives. Graphite, MoS_2, and zinc oxide are frequently added to fluids and greases. Surface conversion coatings are often used to supplement other lubricants.

(3) Intermittent loading conditions. When equipment is stored or is idle for prolonged periods, solids provide permanent, noncorrosive lubrication.

(4) Inaccessible locations. Where access for servicing is especially difficult, solid lubricants offer a distinct advantage, provided the lubricant is satisfactory for the intended loads and speeds.

(5) High dust and lint areas. Solids are also useful in areas where fluids may tend to pick up dust and lint with liquid lubricants; these contaminants more readily form a grinding paste, causing damage to equipment.

(6) Contamination. Because of their solid consistency, solids may be used in applications where the lubricant must not migrate to other locations and cause contamination of other equipment, parts, or products.

(7) Environmental. Solid lubricants are effective in applications where the lubricated equipment is immersed in water that may be polluted by other lubricants, such as oils and greases.

c. Advantages of Solid Lubricants.

(1) More effective than fluid lubricants at high loads and speeds.

(2) High resistance to deterioration in storage.

(3) Highly stable in extreme temperature, pressure, radiation, and reactive environments.

(4) Permit equipment to be lighter and simpler because lubrication distribution systems and seals are not required.

d. Solid lubricants have several disadvantages. The disadvantages of solid lubricants include:

(1) Poor self-healing properties. A broken solid film tends to shorten the useful life of the lubricant.

(2) Poor heat dissipation. This condition is especially true with polymers due to their low thermal conductivities.

(3) Higher coefficient of friction and wear than hydrodynamically lubricated bearings.

(4) Color associated with solids may be undesirable.

e. Types of solid lubricants. Solid lubricants fit into four general categories: lamellar solids, soft metal films, surface treatments, and polymers. These categories are discussed below.

(1) Lamellar Solids. The most common lamellar solids are graphite and molybdenum disulfide.

(a) Graphite. Graphite is crystalline carbon, which comes in natural and synthetic forms. It is commonly used as a solid lubricant additive for lubricating products including oils, greases, and dry powder lubricants. It is typically shiny with a silvery gray appearance and feels slippery to the touch. Graphite has a low friction coefficient and very high thermal stability (3,600 °F [1,982 °C] and above). However, practical application is limited to approximately 1,000 °F (537.7 °C) due to oxidation. Furthermore, graphite relies on adsorbed moisture or vapors to achieve low friction. At temperatures as low as 212 °F (100 °C), the amount of water vapor adsorbed may be significantly reduced to the point that low friction cannot be maintained. In some instances, sufficient vapors may be extracted from contaminants in the surrounding environment or may be deliberately introduced to maintain low friction. When necessary, additives composed of inorganic compounds may be added to enable use at temperatures up to 1,000 °F (537.7 °C). In some forms, graphite can be electrically conductive. When conductive, graphite is one of the most cathodic materials on the galvanic scale and can lead to severe corrosion in wet or marine environments. Due to the potential for galvanic corrosion, DoD has restricted its use as a solid lubricant in certain applications. The following military specifications provide examples of its restricted use.

- MIL-L-23398, Lubricant, Solid Film, Air-Cured, Corrosion Inhibiting, North Atlantic Treaty Organization (NATO) Code Number S-749.
- MIL-PRF-46147 Lubricant, Solid Film, Air-Cured (Corrosion Inhibiting).
- MIL-PRF-46010 Lubricant, Solid Film, Heat Cured, Corrosion Inhibiting, NATO Code – S-1738.

(b) Molybdenum disulfide (MoS_2). Molybdenum disulfide, in its natural form, is obtained by refining the mineral molybdenite. It is typically supplied in powder form and has a dark gray or black appearance. Like graphite, MoS_2 has a low friction coefficient, but, unlike graphite, it does not rely on adsorbed vapors or moisture. In fact, adsorbed vapors may actually result in a slight, but insignificant, increase in friction. MoS_2 also has greater load-carrying capacity and its manufacturing quality is better controlled. Thermal stability in non-oxidizing environments is acceptable to 2,000 °F (1093 °C), but in air it may be reduced to approximately 700 °F (371 °C). DoD has adopted SAE AMS-M-7866A Molybdenum Disulfide, Technical Lubrication Grade for

procurement of powdered MoS_2 used in lubricants and greases for surfaces where boundary conditions exist.

(2) Soft Metal Films. Many soft metals such as lead, gold, silver, copper, and zinc, possess low shear strengths and can be used as lubricants by depositing them as thin films on hard substrates. Deposition methods include electroplating, evaporating, sputtering, and ion plating. These films are most useful for high temperature applications up to 1800 °F (982 °C) and roller bearing applications where sliding is minimal.

(3) Surface Treatments. Surface treatments commonly used as alternatives to surface film depositions include thermal diffusion, ion implantation, and chemical conversion coatings.

(a) Thermal diffusion. This is a process that introduces foreign atoms into a surface for various purposes such as: increasing wear resistance by increasing surface hardness, producing low shear strength to inhibit scuffing or seizure, and in combination with these to enhance corrosion resistance.

(b) Ion implantation. This is a recently developed method that bombards a surface with ions to increase hardness, which improves wear- and fatigue-resistance.

(c) Chemical conversion coatings. Frequently, solid lubricants will not adhere to the protected metal surface. A conversion coating is a porous non-lubricating film applied to the base metal to enable adherence of the solid lubricant. The conversion coating by itself is not a suitable lubricant.

(4) Polymers.

(a) Polymers are used as thin films, as self-lubricating materials, and as binders for lamellar solids. Films are produced by a process combining spraying and sintering. Alternatively, a coating can be produced by bonding the polymer with a resin. Sputtering can also be used to produce films. The most common polymer used for solid lubrication is PTFE.

(b) PTFE. PTFE is a fluorocarbon synthetic resin with a high chemical resistance and melting point. It is white in appearance and slippery to the touch. The main advantages of PTFE are low friction coefficient, wide application range of -330 to 415 °F (-166 to 213 °C), and lack of chemical reactivity. Disadvantages include lower load-carrying capacity and endurance limits than other alternatives. Low thermal conductivity limits use to low speed sliding applications. Common applications include anti-stick coatings and self-lubricating composites.

f. Applying Powdered Solids. The oldest and simplest methods of applying powdered solid lubricants include:

(1) Burnishing. Burnishing is a rubbing process used to apply a thin film of dry powdered solid lubricant such as graphite, MoS_2, etc., to a metal surface. This process produces a highly polished surface that is effective where lubrication requirements and wear life are not stringent, where clearance requirements must be maintained, and where wear debris from the lubricant must be minimized. Surface roughness of the metal substrate and particle size of the powder are critical to ensure good application.

(2) Hand rubbing. Hand rubbing is a procedure for loosely applying a thin coating of solid lubricant.

(3) Dusting. Powder is applied without any attempt to evenly spread the lubricant. This method results in a loose and uneven application that is generally unsatisfactory.

(4) Tumbling. Parts to be lubricated are tumbled in a powdered lubricant. Although adhesion is not very good, the method is satisfactory for noncritical parts such as small threaded fasteners and rivets.

(5) Dispersions. Dispersions are mixtures of solid lubricant in grease or fluid lubricants. The most common solids used are graphite, MoS_2, and PTFE. The grease or fluid provides normal lubrication while the solid lubricant increases lubricity and provides extreme pressure protection. Addition of MoS_2 to lubricating oils can increase load-carrying capacity, reduce wear, and increase life in roller bearings, and has also been found to reduce wear and friction in automotive applications. However, caution must be exercised when using these solids with greases and lubricating fluids. Grease and oil may prevent good adhesion of the solid to the protected surface. Detergent additives in some oils can also inhibit the wear-reducing ability of MoS_2 and graphite, and some antiwear additives may actually increase wear. Solid lubricants can also affect the oxidation stability of oils and greases. Consequently, the concentration of oxidation inhibitors required must be carefully examined and controlled. Aerosol sprays are frequently used to apply solid lubricant in a volatile carrier or in an air-drying organic resin. However, this method should be limited to short term uses or to light- or moderate-duty applications where thick films are not necessary. Before using dispersions, users should become familiar with their applications and should obtain information in addition to that provided in this manual. The information should be based on real world experiences with similar or comparable applications.

g. Applying bonded coatings. Bonded coatings provide greater film thickness and increased wear life and are the most reliable and durable method for applying solid lubricants. Under carefully controlled conditions, coatings consisting of a solid lubricant and binding resin agent are applied to the material to be protected by spraying, dipping, or brushing. Air-cured coatings are generally limited to operating temperatures below 500 °F (260 °C) while heat-cured coatings are generally used to 698 °F (370 °C). The most commonly used lubricants are graphite, MoS_2, and PTFE. Binders include organic resins, ceramics, and metal salts. Organic resins are usually stable below 572 °F (300 °C). Inorganic binders such as metal salts or ceramics permit bonded films to be used in temperatures above 1202 °F (650 °C). The choice of binder is also influenced by mechanical properties, environmental compatibility, and facility of processing. Air-cured coatings applied by aerosol are used for moderate-duty applications; however, thermosetting resin binders requiring heat-cure generally provide longer wear life. The most common method of applying bonded coatings is from dispersions in a volatile solvent by spraying, brushing, or dipping. Spraying provides the most consistent cover, but dipping is frequently used because it is less expensive. Surface preparation is very important to remove contaminants and to provide good surface topography for lubricant adhesion. Other pretreatments used as alternatives or in conjunction with roughness include phosphating for steels and analogous chemical conversion treatments for other metals.

h. Incorporation into Composites. Solid lubricants can be incorporated into polymers and other materials to provide lubrication properties to the base materials. Typically, solid lubricants are added as powders or other solids. Specific examples for self-lubricated materials are provided in the self-lubricated material sections below.

i. Solid Lubricant Standards. Solid lubricants are widely used in industries including automotive, aerospace, and military. Numerous standards are available for purchase by the general public that apply to their procurement, methods of use, testing, etc. Readers interested in finding solid lubrication standards that may also be applicable to civil works applications are encouraged to check with standards organizations including ASTM, and SAE.

12-3. Self-Lubricated Materials. Self-lubricated materials are materials that have the primary bearing/bushing lubricant integral to the base material, which provides lubrication for the life of the part. Self-lubricated materials have been used both successfully and unsuccessfully in a variety of civil works applications (Figure 12-1). The objective of this chapter is to provide the reader with fundamental information on the design, construction, and use of self-lubricated materials. This chapter will only focus on the most common types of self-lubricated materials that have been used in USACE civil works lock and dam applications.

Figure 12-1. Civil Works Self-Lubricated Materials.

a. Use of Self-Lubricated Materials.

(1) Lock and dam applications. Unless required by other USACE regulations, self-lubricated materials are not required to be used in lock and dam applications. However, it is prudent to at least investigate their use. The use of self-lubricated materials eliminates the potential for oil and grease contamination in waterways. Traditional bearings, such as supplied lubricant bronze bearings, have a long history of successful performance and are typically an excellent choice for use. Self-lubricated materials can offer performance improvements for low speed applications. However, the choice to use self-lubricated materials is typically driven by a need to meet a design requirement other than improving general bearing performance. Factors that make them a more desirable option include:

- A need to comply with environmental regulations, such as the Clean Water Act, which may necessitate eliminating or minimizing oil and grease exposure to waterways. (See Chapter 8 for specific regulation references.)
- A desire to eliminate the need for supplied lubrication to be provided to ensure successful bearing performance.
- A desire to reduce the lifecycle cost of the bearing.
- A desire to provide galvanic isolation of components.
- A desire to reduce maintenance.

(2) USACE hydropower applications. In accordance with ER 1110-2-109, *Hydroelectric Design Center* (01 November 2001), the USACE Hydroelectric Design Center (HDC) in Portland, Oregon is designated as the Huntsville Mandatory Center of Expertise (MCX) for hydropower engineering and design. HDC's policy is to use self-lubricated materials in hydroturbine applications. For applications involving turbines, consult HDC (phone: 503-808-4200).

b. Performance History. Many types and designs of self-lubricated materials have been installed at USACE facilities. Overall, a wide range of performance results have been experienced. Many installations have experienced successful performance and others have had significant operational failures. Operational failures have been the result of different causes including unknown or unexplained material failures, overload due to misalignment, inappropriate material selections, and inappropriate design details.

c. General Considerations.

(1) Readers should understand that successful performance of self-lubricated materials relies on factors that are not covered under the scope of this Engineering Manual. Examples include, but are not limited to, accurate estimation of loads, adequate alignment of self-lubricated parts including their housings and running surfaces, and adequate stiffness of housings and running surfaces to match the loading assumptions made. The reader shall also reference EM 1110-2-2610, *Mechanical and Electrical Design of Navigation Locks and Dams* (30 June 2013).

(2) Designers need to be aware that self-lubricated parts and materials have many differences in properties and behavior from traditional metallic supplied lubricant bearings. Successful design of self-lubricated bearing systems relies on designers that understand these differences as well as acceptable design practices for self-lubricated materials. Designers unfamiliar with self-lubricated components, at a minimum, should have their designs and assumptions thoroughly checked by qualified individuals familiar with self-lubricated material systems.

(3) It is common for minor design details, such as final tolerances and fits, to be left for the construction contractor to determine (with consultation from the self-lubricated material manufacturer). However, construction contractors typically are not qualified to perform the complete design for self-lubricated bearing systems. As discussed above, successful design of self-lubricated bearings systems requires detailed knowledge of both the application and self-lubricated materials. Using construction contractors to perform the design of self-lubricated bearing systems is not recommended.

(4) Designers are responsible to consult self-lubricated material manufacturers to verify that the products being used are appropriate for the application. Self-lubricated material manufacturers should also be consulted to verify the use of other appropriate design details such as bearing wall thicknesses, installation fits, running surface clearance fits, edge chamfers, etc.

d. Government Procurement. UFGS 35 05 40.17, *Self-Lubricated Materials, Fabrication, Handling, and Assembly* (May 2014), is available to provide assistance with preparing contract specifications for procurement of self-lubricated materials.

e. Bearing Categories. There are two categories of self-lubricated bearings that will be covered in this chapter. These are the two types most used in civil works applications.

(1) Boundary lubrication bearings. These bearings are by far the most widely used self-lubricated bearings. They are used in applications that are slow speed and can provide high load capacities. They use base materials that incorporate solid lubricants to provide the bearing lubrication. These materials use a large variety of material options and construction methods that will be discussed later in this chapter. There is also a wide range of civil works applications including main bearings for lock and dam gates, hydropower, and fish facilities. Specific application examples are provided at the end of this chapter.

(2) Hydrodynamic lubrication bearings. There is a special category of self-lubricated bearings that operate hydrodynamically. These bearings are most commonly referred to as product-lubricated bearings. Product-lubricated bearings get their name from their use in pump applications where the product being pumped is used to develop the fluid film and provide the hydrodynamic function of the bearing. These bearings are typically fabricated from self-lubricated polymer materials to provide lubrication when the shaft makes contact with the journal. Shaft to journal contact is experienced at startup and shutdown when the fluid film is not present and can also be experienced from vibration or shock loading during operation. For civil works applications, these bearings can provide a solution where petroleum lubricants need to be eliminated (typically due to environmental reasons). One of the most common civil works applications is attraction water pumps for fish ladders and fish facilities. For this application, the water being pumped is used as the lubricant for the bearings that are submerged during pumping. This eliminates the need for oil or grease that may be introduced into waterways. Besides pump applications, one of the largest industries for hydrodynamic self-lubricated bearings is ship propeller shaft bearings. Many self-lubricated material manufacturers tailor their product information toward this industry.

f. Lubrication Principals.

(1) Polymer materials. Polymers are the primary material used to construct self-lubricated components. Polymers are ideal for a number of reasons. First, polymer construction methods allow for easy incorporation of solid lubricants. Second, the tribological properties of polymers offer advantages over metals. Third, polymer materials are lighter than metals, easy to machine, and in general easy to work with. Polymers, however, have limitations. The main property that limits their range of use is thermal conductivity. For high speeds, polymers cannot dissipate the heat generated by friction fast enough to maintain their ideal mechanical properties. This limits most self-lubricated materials to slow speed applications. Recall from the discussion of the Stribeck curve in Chapter 3,

that operating at slow speeds with little or no lubrication results in boundary lubrication characterized by large surface contact (large amounts of asperity contact).

(2) Polymer asperity interactions. Asperity contact and adhesion are the main causes of friction in the boundary lubrication regime. The frictional differences between metallic bearings and polymer bearings can be seen with how the materials undergo asperity interactions. Movement between two surfaces requires resolution between conflicting asperities. For metallic materials, asperity interactions tend to be highly plastic. Resolution of conflicting asperities is performed by shearing, flattening, or crushing of the weaker or both asperities. Polymer materials tend to experience highly elastic deformations for the same type of interactions. Resolution is accomplished by bending or compressing the softer polymer around the metallic asperities. In general, the elastic deformation of polymer asperities requires less energy and results in lower friction.

(3) Polymer adhesion. Solid lubricants are used to minimize adhesion between the polymer bearing and mating surface. The most common solid lubricants include PTFE and molybdenum disulfide. The solid lubricants are incorporated evenly throughout the wear surfaces of the polymer material. As the polymer bearing surface wears, new solid lubricants are constantly exposed to minimize adhesion and maintain low coefficients of friction.

(4) Hydrodynamic bearings. Product-lubricated bearings undergo the lubrication regimes shown in the Stribeck Curve shown in Chapter 3. During starts and stops boundary lubrication is experienced. As the shaft comes up to speed, a fluid film is developed producing hydrodynamic lubrication.

g. Advantages. Self-lubricated materials can offer distinct advantages over traditional supplied lubricant bronze bearings. Due to the limitations of the materials used for their construction, self-lubricated materials are typically only run at relatively slow speeds. The following advantages apply when compared to a supplied lubricant bronze bearing operating in the boundary lubrication regime.

(1) Reliability. Reliable and successful performance of bearings depends on adequate lubrication. Bronze bearings typically have their lubrication supplied either manually from Operations and Maintenance (O&M) staff or from an automatic lubrication (Farval) system. Both of these lubricant sources rely on external factors to function. Manually supplied lubrication depends on adequate funds and availability of labor and equipment, O&M staff familiar with the required type and frequency of lubrication, proper maintenance on the lubrication supply system (grease lines and grease grooves), etc. Automatic lubrication systems also rely on external factors such as proper filling of lubricant hoppers or storage tanks, adequate power sources, proper maintenance of the lubricant supply system. Self-lubricated materials can provide more reliable lubrication as the lubrication is integral to the bearing/bushing base material and does not dependant on external factors.

(2) Better loaded zone lubrication. The slow speed of boundary lubricated bushings results in very little oil or grease lubrication being pulled into the loaded zone of a supplied lubricant bearing/bushing. This can be seen with high asperity contact, friction values, and wear rates for supplied lubricant bearings operating with a boundary lubrication regime. The lubricants of self-lubricated materials are distributed throughout the base material and are always present in the loaded

zone of the bearing/bushing. The better loaded zone lubrication results in lower coefficients of friction and can result in higher allowable loads when compared to supplied lubricant bearings.

(3) O&M Costs. Eliminating the need for supplied lubricants can lower manpower requirements and equipment costs that would otherwise be required to operate and maintain a supplied lubricant bearing/bushing.

(4) Electrical isolation. Polymers are widely used in the construction of self-lubricated materials. Most polymers are inherently not electrically conductive. This can provide large advantages in submerged and other marine environments where it is desirable to provide galvanic isolation of dissimilar metals.

(5) Environmental. Eliminating the need for supplied lubricants can help reduce or eliminate exposure of waterways to environmentally harmful petroleum products or other lubricant types.

(6) Lower friction. Many self-lubricated materials have reduced coefficients of friction when compared to greased and oiled systems resulting in lower required actuating forces/torques. In addition, many self-lubricated materials have static and dynamic coefficients of friction that are closer together resulting in reduced stick-slip. Stick-slip is the jerky motion that occurs on startup due to the increased force/torque required to initiate motion.

h. Disadvantages. Most of the disadvantages of self-lubricated materials stem from the limitations of the polymer materials used for their construction. The mechanical properties of polymer materials are very different from those traditional bearing materials such as bronze. Polymer materials need to be designed, fabricated, and operated in different ways.

(1) Slow speeds. Self-lubricated materials are typically only successfully operated at slow speeds. This is mainly due to their inability to dissipate the heat generated from operation. This is a direct result from the low thermal conductivity of the polymer materials used for their construction. In general, running speeds that would typically result in mixed, elastohydrodynamic, and hydrodynamic lubrication for a supplied lubricant bronze bearing would generate too much heat for a self-lubricated material to perform successfully.

(2) Thermal expansion. The polymer materials used to construct self-lubricated materials typically have much higher thermal expansion rates than those of metals. The larger range of dimensional shifts can cause issues with shop to field measurements and applications with large temperature fluctuations.

(3) Brittle failure modes. The types of polymers used for self-lubricated materials tend to experience brittle failure modes. Situations where metallic bearings would elastically deform and redistribute stress can cause self-lubricated materials to crush or fracture and experience little to no plastic deformation.

(4) Misalignment. Solid polymer self-lubricated materials have less tolerance for misalignment than metallic materials. Edge loading can result in overloading and fracture of localized areas of the material.

(5) Running surfaces. Self-lubricated materials have more specific and expensive running surface requirements. To avoid abrasive damage, running surfaces need to have a smooth surface finish. For submerged and marine environments, running surfaces need to be stainless steel to prevent corrosion that would otherwise destroy the surface finish of the running surface.

(6) Stiffness. The polymers used for most self-lubricated materials have a significantly lower modulus of elasticity than bronze. This results in increased deflection under load.

(7) Water absorption. The polymers used for most self-lubricated materials are subject to water absorption. Swelling from water absorption can reduce bearing clearances or cause seizing if clearances are sized improperly. Polymers can be selected to minimize absorption, but the effect is always present and needs to be considered.

(8) Less understood. Self-lubricated materials are a newer and much less widely used than bronze bearings. The properties of the polymers used to fabricate self-lubricated materials are very different from metallic materials. Successful design and performance require an understanding of these differences that can be easily overlooked by designers only familiar with traditional bronze bushing/bearings.

12-4. Materials.

a. Lubricants. Solid lubricants are used in self-lubricated materials to provide the bearing lubrication. The most commonly used solid lubricants are the inorganic compounds graphite and molybdenum disulfide and the polymer material PTFE.

(1) Incorporation of solid lubricants. Solid lubricants are incorporated into the base bearing material during the manufacturing process. Most commonly this is performed by mixing powder form solid lubricants into the liquids that are cured to create the base self-lubricated materials. Solid lubricants are often also incorporated into textile sheets or strands used in reinforcing layers in the base material or as polymer plugs inserted into the base material.

(2) Use of graphite. In some forms, graphite can be electrically conductive. When conductive, graphite is one of the most cathodic materials on the galvanic scale. Graphite used in some self-lubricated materials has lead to severe galvanic corrosion of the mating running surface. However, use of graphite does not necessarily mean that the self-lubricated material will be conductive and result in galvanic corrosion. It is recommended for marine or wet environments that use be limited to materials that have a dielectric strength that prevents galvanic corrosion on the self-lubricated material running surface or other critical surfaces.

b. Base Materials.

(1) Polyester resins. Polyester resins are the most widely used resin systems in the marine industry. The high ultraviolet (UV) resistance, water resistance, and cost make it an ideal choice for composite hulled boats. The two basic types of polyester resin are orthophtalic and isophthalic. Orthophthalic is a more economical resin with higher water absorption characteristics. Isophthalic is more expensive, but has lower water absorption make it more ideal for high performance bearing applications. Pre-cured polyester resins have a limited shelf life and will start to gel after a period of

time. The curing/polymerization process is performed by introducing styrene and a catalyst. The styrene crosslinks the polymer chain at locations within the polyester molecule.

(2) Vinylesters. Vinylesters are formed from a long-chain molecule structure similar to polyester resins, but have fewer polymer crosslinks. The fewer cross link sites can result in improved toughness and elasticity. Vinylesters also have fewer ester groups than polyesters, which improve the water resistance properties. Overall, vinylesters have a higher cost than polyesters, but are typically an excellent material for high performance bearings.

(3) Epoxies. In general, epoxies have a higher cost compared to other base materials, but can offer higher strengths and higher mechanical properties. They are formed with a long-chain molecular structure similar to a vinylester. Epoxies do not use ester groups, which improve their water resistance properties.

12-5. Fabrication. There is a wide range of self-lubricated materials that are used in civil works applications. Most of these materials use polymers with solid lubricants dispersed throughout the polymer matrix. There are various methods of fabricating the polymer materials that make up these self-lubricated materials. The four most common self-lubricated material construction methods are discussed below.

a. Fabric/Textile-Reinforced Polymers. Reinforced polymer self-lubricated materials are composites made up of three basic components; textile, resin, and lubricants (Figure 12-2). The textile serves to reinforce the base polymer resin material and provide mechanical strength and stiffness similar to the way steel rebar is used to reinforce concrete. The lubricants are disbursed through the base material matrix. As the material wears, new lubricant is constantly exposed.

Figure 12-2. Textile-Reinforced Resin Self-Lubricated Materials.

(1) Applying resin to textile. Fabrication starts by applying the resin that makes up the base material to the fabric or strand textile. This is typically performed by pulling the textile through a resin bath. Solid lubricants and other solid base material additives are added to the resin bath to create even disbursement through the base material. Next the textile material is layered using one of the two methods described below.

(2) Layering by mandrel wrapping. After the textile is pulled through the resin bath, the raw stock for a part is created by building up the resin drenched textile in layers. The most common method is performed by wrapping a continuous length of textile on a mandrel. Mandrel wrapping allows tight textile layers as the textile can be held under tension as it is wrapped on the mandrel. Mandel wrapping is used to create bearings/bushings and other round parts (Figure 12-3). A mandrel diameter slightly smaller than the inner diameter of the finished part is selected to allow machining to the final diameter required.

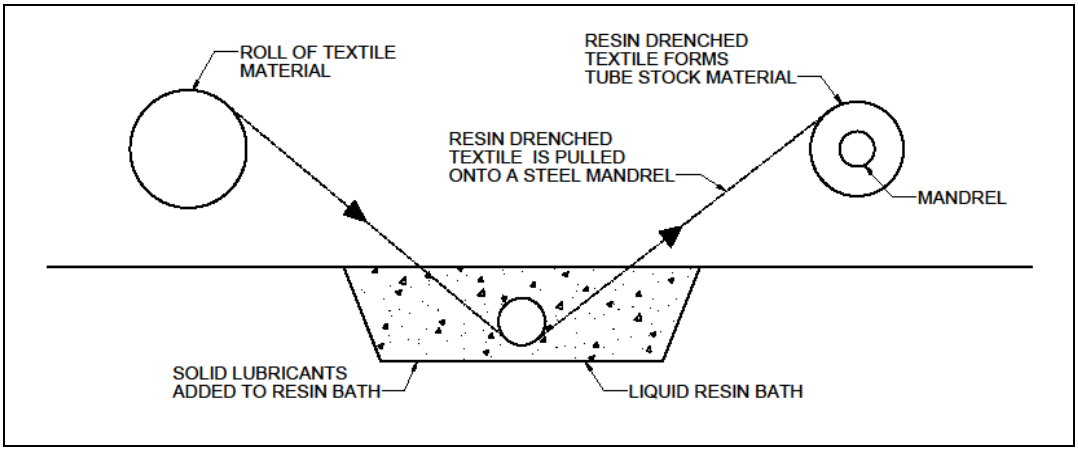

Figure 12-3. Mandrel Wrapping To Create Tube Material.

(3) Layering by sheet stacking. Sheet material and blocks are created by stacking resin drenched textile onto a flat surface (Figure 12-4). After the thickness for the part is developed, a press is used to compress the textile layers and flatten irregularities. Stacking is only performed with sheet textile. The size of parts that can be created using this method is typically limited by the size of the manufacturer's press.

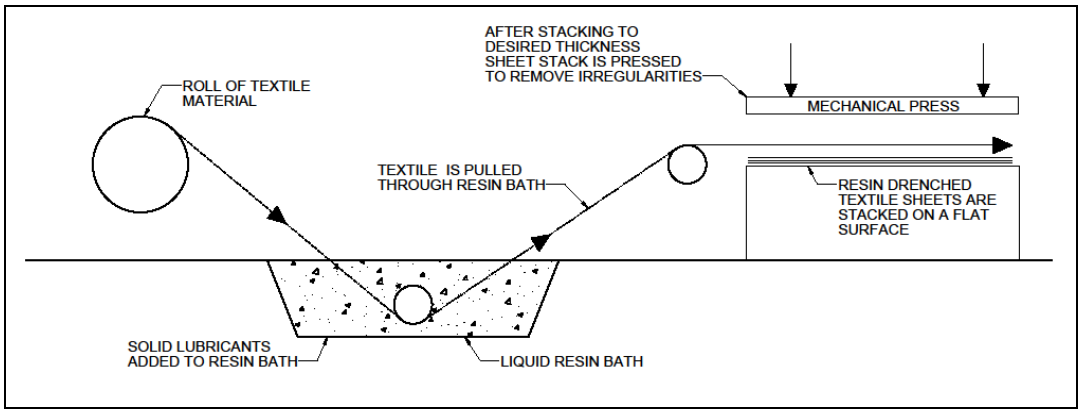

Figure 12-4. Stacking To Create Sheets and Blocks of Stock Material.

(4) Curing. After completion of the layering process, the part is typically cured in an oven. After curing (Figure 12-5), the part is removed from the mandrel or flat support surface and excess material is trimmed.

Figure 12-5. Cured Material on Mandrel.

(5) Machining. Machining is performed using conventional metal machining methods (Figure 12-6). Most fabric-reinforced resin materials machine similar to bronze or dense hardwoods. Manufacturers have their own machine shops and will perform the full fabrication of the part according to the customer's drawings. However, many manufacturers are also willing to provide guidance for machining to be performed by outside parties. These types of materials can be line bored or final machined in the field to allow appropriate alignment and installation tolerances. Most manufacturers only use their high performance solid lubricants on the first few textile layers of the component running surface. Field machining should be coordinated with the material manufacturer to maintain the appropriate thickness of solid lubricant layers.

Figure 12-6. Machining of Fabric-Reinforced Resin Materials.

(6) Notable characteristics.

- Anisotropic material properties. The mechanical properties vary greatly with the direction the load is applied to the material. Parts are typically designed to have the load applied perpendicular to the textile layers. This maximizes the strength of the material.
- Simple Fabrication Methods. Complex and custom tooling is not required for fabric-reinforced resin materials. This can help reduce the cost and lead time of parts. The simple layering methods can be used to create an almost unlimited range of raw material stock. Parts are machined using conventional and widely available machining methods. Custom sizing of stock and machining can create an almost unlimited variety of part sizes and shapes.
- Versatile Material Selection. Materials for the textile, resin, and lubricants can be selected to customize the material properties for specific applications. Common customizations include combinations of materials that allow high temperature service, high lubricity and low wear properties, and high chemical resistance.

b. Extruded Homogeneous Materials. The polymer extrusion process is used widely to mass produce plastic parts (Figure 12-7). Common household items fabricated with a polymer extrusion process include polyvinyl chloride (PVC) pipe, plastic gutters, trim, and moldings. With the right mix of thermoplastic polymer materials, this same extrusion process is used to create self-lubricated materials.

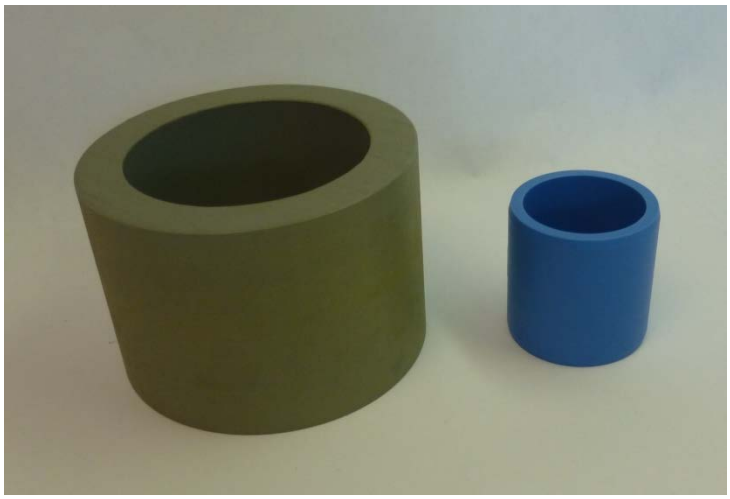

Figure 12-7. Extruded Self-Lubricated Materials.

(1) Extrusion process. The extrusion process for self-lubricated materials is similar to that of other common extruded products. Plastic pellets are fed into an extruder, heated to their melting point, and forced out of an extrusion die (Figure 12-8). Each different size and shape of extruded part requires a different die. Due to the expense of the extruder dies, most manufacturers produce limited part sizes.

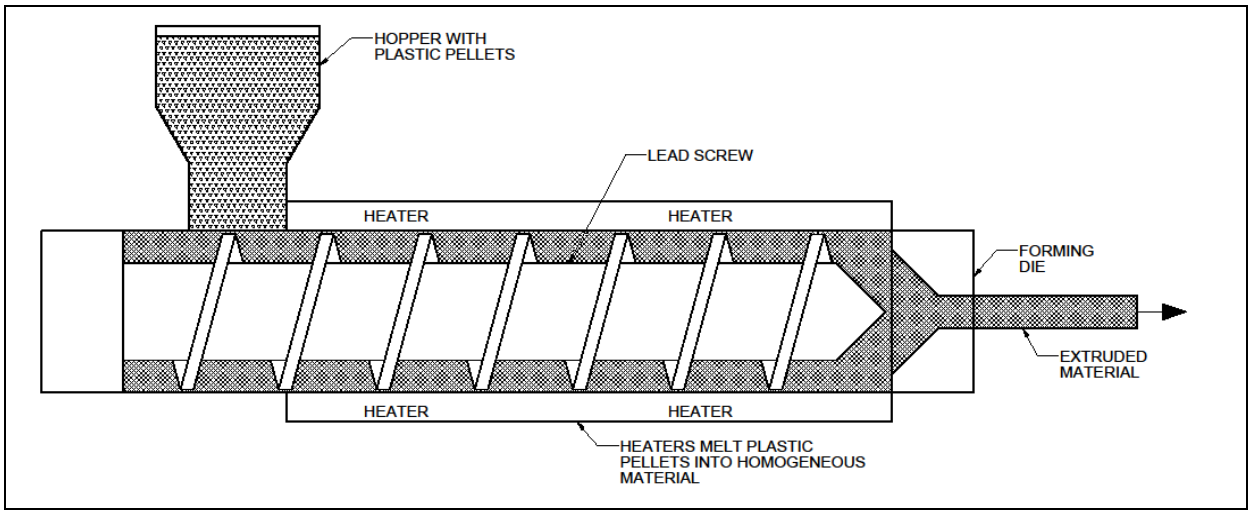

Figure 12-8. Plastic Extrusion Process.

(2) Machining. After extrusion, parts can be machined to final sizes using conventional machining methods. Most homogeneous extruded materials exhibit machining characteristics similar to a soft bonze. Manufacturers will provide final machined parts however; some manufacturers will also provide guidance on machining by outside parties. These types of materials are commonly line bored or final machined in the field to allow appropriate alignment and installation tolerances.

(3) Notable characteristics.

- Isotropic Material Properties. The extrusion process requires melting a mix of plastic pellets into a homogenous material, which results in isotropic part properties.
- Size Limitations. The extrusion process requires custom die sizes that limit the range of extruded stock available. Designed parts need to fit within the size parameters of the available extruded stock material.
- Low stiffness. The homogeneous nature of the formed materials tends to have low stiffness when compared to other self-lubricated polymer parts. Adequate stiffness for a part needs to be provided in the design of the bearing housing.
- Thermoplastic. The extrusion process is limited to using thermoplastic materials that will melt if exposed to high temperatures. These materials also tend to be softer and exhibit lower abrasion resistance properties.

c. Sprayed Homogeneous Coatings. Spray coated self-lubricated parts are made up of two basic components, a spray applied self-lubricated coating and a backer material. The backer material provides the stiffness and strength for the part. Backers are typically made of metallic materials such as a bronze alloys, but hard polymer composites have also been used. The self-lubricated coating is a homogeneous polymer resin with solid lubricants such as PTFE. The coating is typically no more than 1/32-in (0.794-mm) in thickness. Figure 12-9 shows an example of sprayed homogeneous coating self-lubricated materials.

Figure 12-9. Sprayed Homogeneous Coating Self-Lubricated Materials.

(1) Backer fabrication and surface preparation. Backer materials are fabricated with an allowance for the thickness of the self-lubricated coating. The surface to be coated requires a specific surface profile and chemical cleaning before applying the sprayed coating. Figure 12-10 shows a part with a sandblasted surface profile ready for final cleaning and spray coating.

Figure 12-10. Bronze Alloy Backer Material with Roughened Surface Ready for Spray Coating.

(2) Spraying of coating. The sprayed coating is built up to a thickness that allows machining to the final dimensions (Figure 12-11). Figure 12-12 shows a part similar to that shown in Figure 12-10 after the spray process and before final machining.

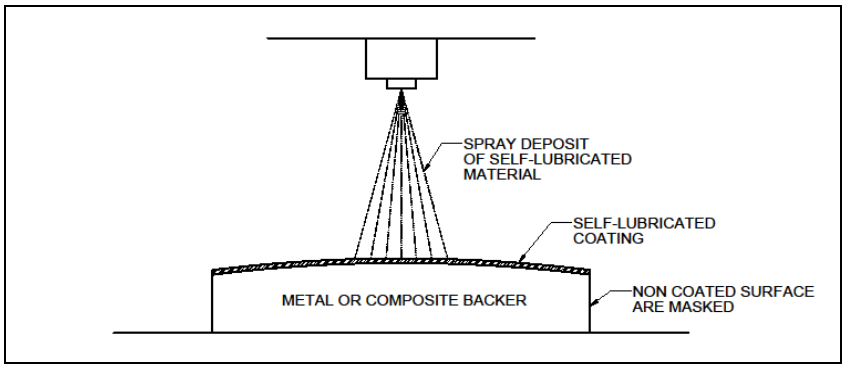

Figure 12-11. Spraying of Coating.

Figure 12-12. Spray Coated Parts.

(3) Machining. The sprayed self-lubricated coatings have machining capabilities similar to a soft bronze. After the spray coating is applied and cured, conventional machining methods are used to bring the coating to final size (Figure 12-13). The small coating thickness of these types of materials does not lend well to field machining.

Figure 12-13. Finished Part.

(4) Notable characteristics.

- High stiffness. The rigid backer materials tend to create parts with high stiffness compared to other self-lubricated materials.
- High Hardness. Sprayed coatings tend to have a high hardness, which provides excellent abrasion resistance and higher allowable design pressures.
- Versatile Part Sizes. Sprayed coatings can be applied to an almost unlimited range of backer sizes and types.

d. Plugged metals. Plugged metal self-lubricated parts are made up of two basic components, a bronze base material and polymer self-lubricating plugs (Figure 12-14). The bronze base material provides stiffness and strength for the part while the plugs provide lubrication. As the bearing operates, the self-lubricated plug material wears. The plug wear material is pulled across the bronze surfaces by the shaft providing lubrication for the bearing.

Figure 12-14. Plugged Metal Self-Lubricated Materials.

(1) Base materials. Base materials are fabricated from bronze materials common to traditional supplied lubricant bearings. Typical materials include bearing bronze (UNS C93200) and aluminum bronze (UNS C95400).

(2) Lubricating plugs. Lubricating plugs are typically a homogeneous polymer material. Common lubricating additives are PTFE and graphite.

(3) Assembly process. Assembly is performed by interference fitting the plug material into the machined cavities (Figure 12-15).

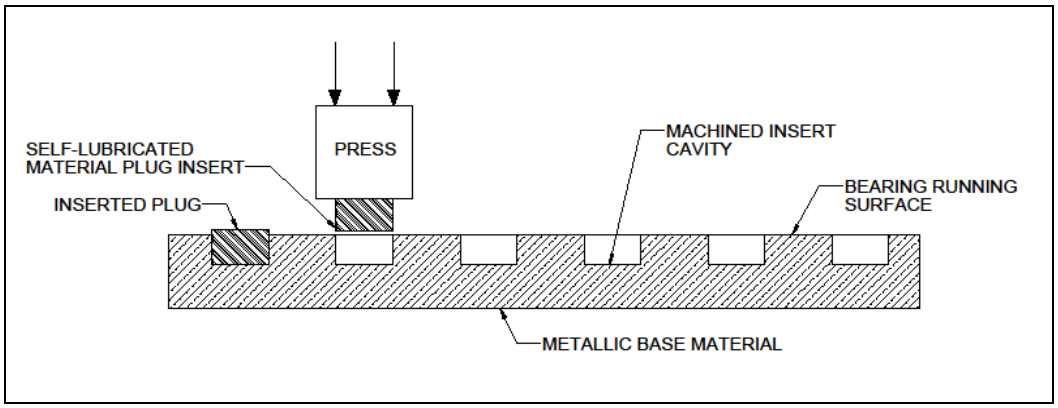

Figure 12-15. Inserting Self-Lubricated Plugs.

(4) Machining. These materials are made primarily of bronze and are machined with standard bronze machining methods. These types of materials can typically be line bored or final machined in the field to allow appropriate alignment and installation tolerances.

(5) Notable characteristics.

- High Stiffness. The bronze base materials provide a bearing stiffness comparable to traditional bronze supplied lubricant bearings.
- Ductile Failure Modes. The bronze base material will experience ductile failure modes. This is very different from polymer-based self-lubricated materials that tend to experience brittle failure modes.
- Intermittent Lubrication. The intermittent spacing of the self-lubricating plugs is not ideal for applications that have small ranges of movement. For the bearing to lubricate the full running surface, the bearing needs rotate far enough for adjacent plugs to move over the same area.
- Electrically Conductive. The bronze base material does not provide electrical isolation between the bearing and running surface. Graphite is also a commonly used plug material that can cause severe galvanic corrosion in a marine environment.

12-6. Failure Modes. Operational failures experienced by self-lubricated materials have been attributed to a variety of different causes. Common causes include overload due to misalignment, inappropriate material selections for the application, and inappropriate design details. These are the same types of causes that lead to failures of traditional metallic supplied lubricant bearings. Although causes are often the same dramatic differences are found with the failure behavior of polymer self-lubricated materials. It is important for designers and users to understand these differences.

a. Failure Behavior. Solid polymer self-lubricated materials, such as textile-reinforced composites and extruded homogeneous materials have significant differences in failure behavior from metallic bearings. Solid polymer self-lubricated materials can sustain small amounts of overload or damage without impact to performance. However, significant overloads often lead to fracture of these types of material, which can progress into complete failure of the component.

When significantly overloaded, most solid polymer materials experience brittle failure modes such as fracture and crushing.

b. Edge Loading. Edge loading is caused by a misalignment between the journal and shaft. Some common causes of misalignment include machining errors, poor alignment of concentric bushings, poor alignment of the shaft to the journal, and deflection of components under load. Edge loading can cause loading of the bushing that is several times the design load. Minor edge loading will typically result in chipping of sprayed coatings and localized edge damage to textile-reinforced composites and homogenous extruded materials. Severe edge loading can lead to major damage to sprayed coatings and their base materials, fracture homogeneous, and textile-reinforced polymer materials, which can progress to complete component failure. The only way to prevent severe edge loading is to maintain appropriate alignment of parts. Consequences of minor edge loading can be minimized by appropriate part detailing. Often manufacturer's recommend edge chamfers to minimize edge contact from minor misalignments.

c. Crushing. Crushing failures start to occur when the component loading exceeds the compressive yield point of the material. For rigid polymers, the compressive yield point is defined as the first point on the stress vs. strain curve where an increase in strain occurs without an increase in stress. Exceeding the compressive yield point of a material is most often caused by uneven part loading resulting from a severe misalignment. However, underestimating operating loads can also result in exceeding material yield points and crushing failures. Figure 12-16 shows fractures from a crushing failure of a textile-reinforced composite bushing. The crushing failure was due to an overload caused by a severe misalignment.

Figure 12-16. Crushing Failure of Textile-Reinforced Composite Self-Lubricated Component.

d. Disbonding. Disbonding occurs when a material separates from a substrate.

(1) Sprayed coatings. Disbonding of Sprayed coatings occurs when the coating separates from the backer material to which it was applied. This can be caused by improper curing of the coating or other manufacturing defects. This can also be caused by overload during service.

(2) Bonded adhesive. Disbonding can also occur as a failure of an adhesive used to install a self-lubricated component into a housing. The primary cause of these types of failures is an improper installation procedure. Figure 12-17 shows a disbonding failure that resulted from improper surface preparation of the self-lubricated material housing.

Figure 12-17. Disbonding Failure from Improper Housing Surface Preparation.

e. Delamination. Delamination occurs when layers of a textile-reinforced composite material separate. The most common cause is from an overload shear failure where the load is applied parallel to the layers of reinforcing textile.

f. Abrasive Wear. As discussed in Chapter 2, abrasive wear occurs when a hard surface slides against and cuts grooves from a softer surface. This can occur with self-lubricated materials when grit, debris, or contaminants enter a bearing. Consequences of abrasive wear range from surface damage that causes reduced service life to destruction of the bearing/bushing. Self-lubricated materials have a wide range of resistance to abrasive wear. In general, a material's abrasion resistance is a determined by the hardness of the material. Sprayed coatings and plugged metals tend to be the hardest and have the highest tolerance to abrasive contaminants. Textile-Reinforced composites tend to have moderate hardness and moderate tolerance for contaminants. Extruded homogeneous materials tend to be the softest and generally have low tolerance for contaminants. Seals can be used to minimize a bearings exposure to abrasive contaminants.

12-7. Design. This section will discuss fundamental design considerations for self-lubricated materials.

a. Is a self-lubricated material appropriate? Before performing the design of a self-lubricated material bearing/bushing system a designer must first answer the question: is a self-lubricated material appropriate for my application? Some preliminary checks that can help determine suitability of a self-lubricated material include:

(1) Pressure–velocity (P-V). The P-V rate can be a quick indicator to tell if a self-lubricated material will or will not work for an application. Most self-lubricated material manufacturers will provide a P-V chart for their materials. This can be used to give designers a general idea of what their application demands compared to the material performance limits.

(2) Bearing pressure. Both the dynamic and static bearing pressures should be checked against the material allowable values. The bearing pressure should be calculated as the load applied at the bearing divided by the projected bearing area. Bearing pressure should be limited to 4,000psi (27.6MPa).

(3) Performance testing. A variety of self-lubricated material performance tests have been developed by the Engineer Research and Development Center, U.S. Army Construction Engineering Research Lab (ERDC-CERL) and Powertech Labs, Inc. (Surrey, BC, Canada). Designers should familiarize themselves thoroughly with performance test reports available for the material types they are selecting. Reports that summarize some of the performance testing that has been performed include:

- ERDC/CERL SR-04-8 Field Evaluation of Self-Lubricated Mechanical Components for Civil Works Navigation Structures.
- CERL Technical Report 99/104 *Greaseless Bushings for Hydropower Applications: Program, Testing, and Results* (Jones et al. 1999, consult HDC [phone: 503-808-4200] for updates to performance scores).

(4) Manufacturer recommendations. Manufacturers should be consulted to verify that the application is appropriate for their material. Designers are responsible to make sure they fully characterize the application when consulting with manufacturers. Application requirements such as bearing pressures, running speeds, environment temperatures, exposure to debris/contamination, exposure to chemicals, impact loading, alignment through multiple features/components, installation methods, and any other unique requirements need to be communicated.

b. Running Surface Considerations: Self-lubricated materials have a huge range of materials types, constructions, performance properties, etc. However, the running surface requirements for most materials are virtually identical. The most important consideration for self-lubricated running surfaces is the surface finish. Almost all self-lubricated materials used for civil works lock and dam applications require very smooth surfaces. Most manufacturers require running surfaces no rougher than 32 microinches (0.8μm) for infrequent use and surfaces no rougher than 16 microinches (0.4μm) for frequent use. Special considerations described below are required to maintain these manufacturer running surface finish requirements.

(1) Surface hardness. The surface hardness is an important consideration in maintaining the surface finish of a self-lubricated running surface. In general, higher surface hardness are better as they resist scratching, marring, and other damage that can act as a cutting edge against the relatively soft self-lubricated polymer materials. Most self-lubricated material manufacturers recommend running surface hardness values between 30 and 40 on the Rockwell C scale (HRC 30 – HRC 40).

(2) Corrosion resistance. Another important consideration for maintaining the surface finish of a self-lubricated running surface is corrosion resistance. Corrosion can quickly turn smooth machined and polished surface into one filled with sharp and jagged edges. Again, this is detrimental to self-lubricated materials that are fabricated from relatively soft polymers. For submerged and marine environments, adequate corrosion resistance typically requires the use of stainless steel running surfaces.

(3) Material selection. The considerations above lead to one very common material selection to be used for self-lubricated material running surfaces. This material is 17-4 precipitation hardened stainless steel (UNS S17400). This material has good (fresh water) corrosion resistance and can be heat treated to a high surface hardness. Heat treatments of H1150, H1100, and H1050 are commonly used. Designers should be careful to avoid the stress corrosion cracking phenomenon that is common among the lower heat treatment of H1000, H0950, and H900.

(4) Other material selections. While 17-4 PH stainless steel is by far the most common and successful self-lubricated material running surface it is sometimes not the best match for an application. Salt water applications often require the use of 316 stainless steel (UNS S31600) to minimize corrosion. Applications that require welding of the running surface also may require 316L grade stainless steel (UNS S31603). However, designers should remember, the 316 variety of stainless steel is much softer and more susceptible to scratching and abrasive surface damage that can harm self-lubricated materials. The 316 variety of stainless steel is also not free machining and is more difficult to machine to the appropriate surface finish.

c. Design Coefficient of Friction. Laboratory testing has measured coefficients of friction for most self-lubricated materials between 0.1 and 0.22. However, as with supplied lubricant bronze bearings, dirt, debris, and contamination can enter into the bearing and degrade the coefficient of friction that is seen in actual operation. Designers should select conservative coefficients of friction that account for debris and contamination for the design of self-lubricated bearing systems and related operating systems. It is recommended that a minimum coefficient of friction of 0.3 is used for the design of bearing systems.

d. Installation Methods. The self-lubricated material manufacturer’s recommendations should always be followed for installing self-lubricated materials. The following are the most common installation methods.

(1) Interference fitting. Interference fitting is by far the most simple, cost effective, and common method to install self-lubricated sleeve bushings. Smaller bushing sizes can often be interference fit using a force fit method. Adequate protection must be provided to shield the self-lubricated materials from damage during force fitting. In general, force fitting methods should use smooth constant force and should avoid hammer blows or other impact loads to force components together. Larger bushing can be interference fit using a shrink fitting method. Most commonly,

bushings can be cooled in a freezer or submerged in liquid nitrogen to establish the shrink required to assemble components. Designers should consult with the self-lubricated material manufacturer to determine the recommended amount of interference. Designers should also remember that, after interference fitting is performed, the inner surface of the bushing will shrink in diameter and change the bushing/bearing running clearance.

(2) Bonding. Bonding installation methods have been performed successfully for self-lubricated materials. However, the challenges and disadvantages of bonding often outweigh the advantages. As a result, bonding is typically only used in applications where there is a concern of an interference fit coming loose over time. Bonding should only be performed by individuals that are familiar with the both the bonding adhesive and self-lubricated material manufacturer's requirements/recommendations. Bonding typically requires specific cleaning, surface preparation, clamping, curing time, curing temperature, etc. Successful results are largely dependent on using skilled installers that can follow the specific instructions of the bonding adhesive manufacturer. In general, it is more difficult to successfully perform bonding than to perform other installation methods. This is especially true when installation needs to be performed in the field.

(3) Fastening. Fastening is another very simple and common installation method for self-lubricated materials. Designers should be aware that it is easy to over tighten self-lubricated material mounting fasteners. The use of fender washers or other methods to distribute mounting fastener loads are often required. Designers should also consider that the thermal expansion rate of polymers used to construct self-lubricated materials is often multiple times the expansion rates of metals. Thermal expansion needs to be accounted for with the design of a mounting fastener system.

e. Running Clearances. Designers should follow the self-lubricated material manufacturer's recommendations for running clearances as each material is different. Running clearances need to account for various factors. Examples include different thermal expansion rates between the bearing/bushing and housing, water absorption, fabrication tolerances, etc. Self-lubricated material manufacturers typically recommend around 0.002 in (0.05 mm) of diametrical running clearance per inch (25.4 mm) of diameter. The USACE HDC considers manufacturer's clearance recommendations to be excessive for certain hydropower applications. For applications involving hydro turbines, consult HDC (Phone: 503-808-4200).

f. Seals.

(1) Need for seals. The use of physical seals for self-lubricated bushings/bearings is an important consideration for designers. Factors that should be considered when making this decision include the potential for debris or contaminants to enter the bushing/bearing, the bushing/bearing's natural tendency to evacuate debris or contaminants, and the abrasion resistance characteristics of the chosen material construction(s).

(2) Seal materials. There are many acceptable materials and configurations that can be used for physical seals. The material choices presented here have been used in self-lubricated material bushing/bearing designs and are provided here as sample seal materials for consideration. Elastomeric o-rings are commonly used for static joint seals. These are designed to be compressed with the assembly of the joint to provide positive contact to exclude debris and other contaminants.

(3) Low friction polymers are commonly used for dynamic joint seals. PTFE is a very common selection because of its low friction and chemically resistive properties. A bent metal spring or compressed o-ring is typically used to provide positive contact when the joint is assembled (Figure 12-18). These types of seals are commonly available as off-the-shelf parts from seal manufacturers.

Figure 12-18. PTFE Spring-Loaded Deflection Seal (Indicated by Arrow).

12-8. Applications.

a. Navigation Locks

(1) Miter and sector gate pintles.

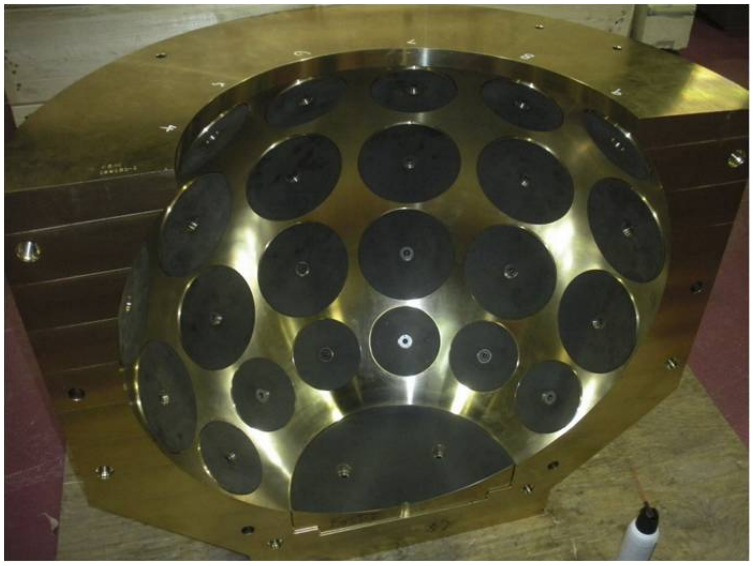

Figure 12-19. New Orleans West Closure Complex Sector Gate Pintle (36-in. Diameter).

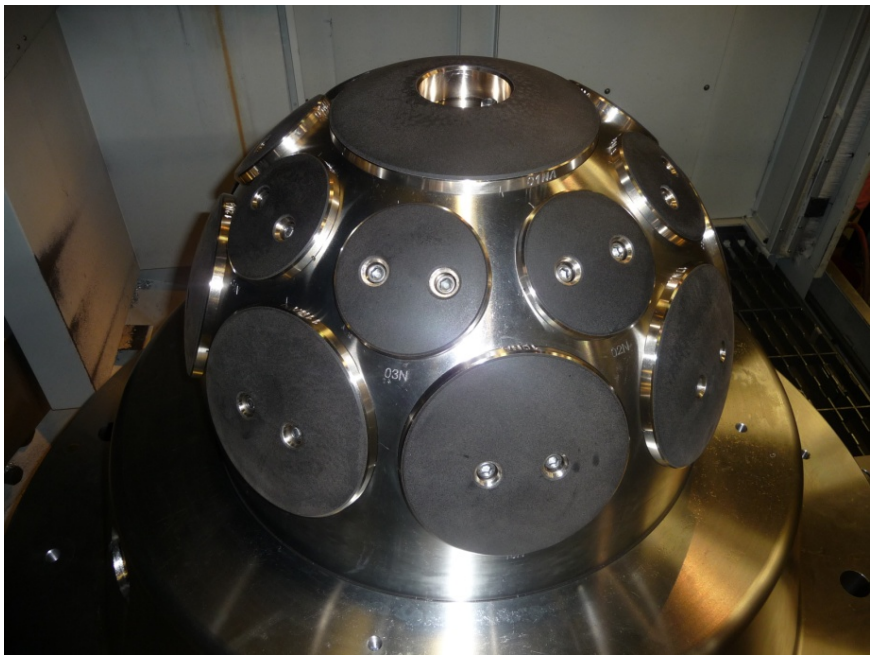

Figure 12-20. The Dalles Dam Miter Gate Pintle (22-in. Diameter).

Figure 12-21. The Dalles Dam Miter Gate Pintle Installed.

(2) Floating mooring bits.

Figure 12-22. Bonneville Dam Floating Mooring Bit.

Figure 12-23. Floating Mooring Bit Self-Lubricated Guide Rollers.

b. Lock and Dam

(1) Spillway gates.

Figure 12-24. Spillway Tainter Gate Trunnion Bushing Freeze Fitting.

Figure 12-25. Spillway Tainter Gate Trunnion Bushings.

Figure 12-26. Spillway Tainter Gate Trunnion Thrust Washer.

Figure 12-27. Spillway Tainter Gate Rope Connection Pin Bushing.

(2) Vertical lift gates – guide rollers.

Figure 12-28. John Day Dam Vertical Lift Gate.

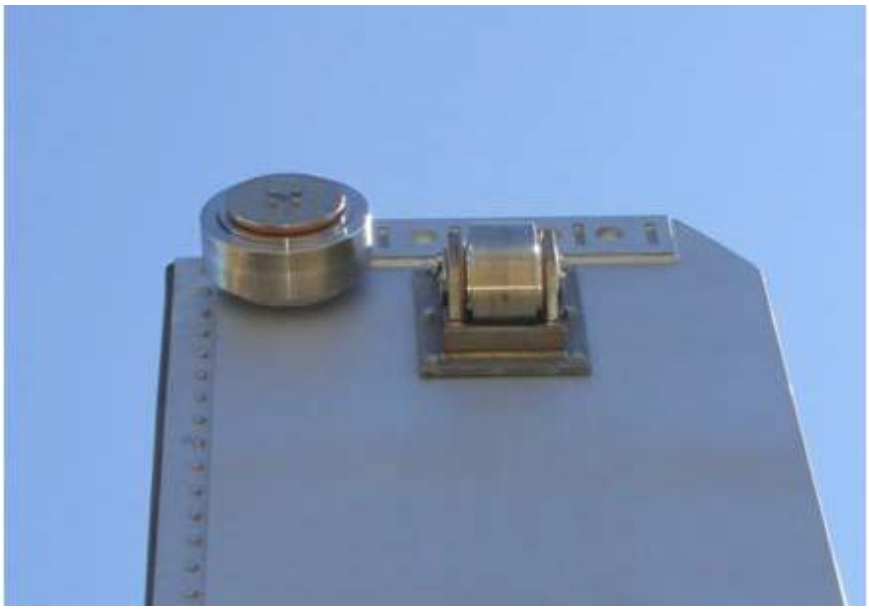

Figure 12-29. John Day Gate Top Guide Rollers.

Figure 12-30. John Day Gate Bottom Guide Rollers (Self-Aligning).

(3) Vertical lift gate - guides, rub blocks, wear pads.

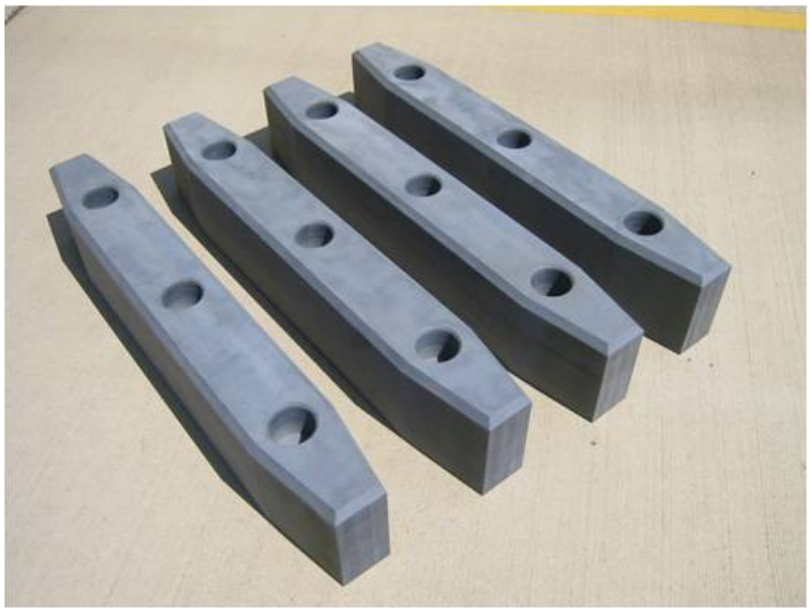

Figure 12-31. Vertical Lift Gate Guide Blocks.

c. Hydropower

(1) Wicket gate operating mechanisms.

Figure 12-32. Wicket Gate Operating Mechanism Bushings.

(2) Kaplan turbine hub assembly.

Figure 12-33. Kaplan Turbine Hub Bushings.

d. Pumps

(1) Vertical pump wet end bushings.

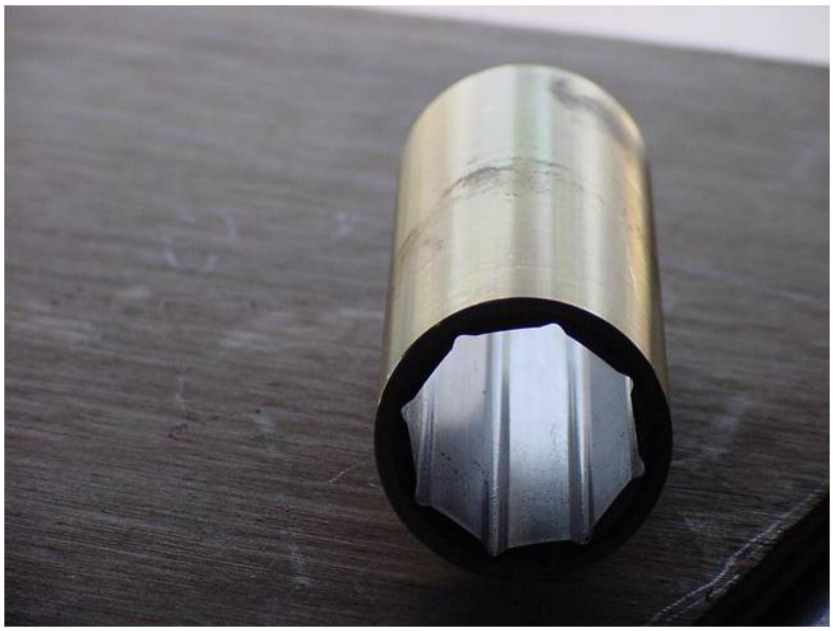

Figure 12-34. Water Lubricated Bearing.

THIS PAGE INTENTIONALLY LEFT BLANK

CHAPTER 13

Environmentally Acceptable Lubricants

13-1. General. Petroleum or mineral oil-based lubricating oils, greases, and hydraulic fluids are found in widespread use throughout USACE facilities. However, these products are usually toxic and not readily biodegradable. If these materials escape to the environment, the impacts tend to be cumulative and consequently harmful to plant, fish, and wildlife. Due to these potential hazards, the USEPA and other government regulators have imposed increasingly stringent regulations on the use, containment, and disposal of these materials. For instance, USEPA document 40 CFR 110, *Discharge of Oil*, requires that no visible oil sheen be evident downstream from facilities located in or close to waterways. USACE facilities such as hydropower plants, flood-control pumping plants, and lock and dam sites (e.g., Figure 13-1) either do pollute, or have the potential to pollute waterways due to the use of mineral oil-based materials in these facilities. Grease, hydraulic fluids, and oil leaking from equipment may be carried into the waterway. Because of the difficulty in completely eliminating spills and discharges of these mineral oil-based lubricants, and to alleviate concerns about their impact on the environment, a new class of EA lubricants is available and finding increasing use. EA lubricants, as contrasted to mineral oil-based equivalents, are generally nontoxic and decompose into water and carbon dioxide (CO_2). EA lubricants are frequently made from renewable resources. EA fluids and lubricants, however, still comprise only a small percentage of the overall lubrication market although this percentage is increasing.

a. Clean Water Act Requirements. The Clean Water Act requirements and USEPA requirements are driving many USACE facilities to adopt EA lubricants. Section 301(a) of the Clean Water Act (CWA) provides that “the discharge of any pollutant by any person shall be unlawful” unless the discharge is in compliance with certain other sections of the Act. 33 USC 1311(a). Section 311 of the CWA, as amended by the Oil Pollution Act of 1990 (33 USC 2701-2720), applies to ships and prohibits discharge of oil or hazardous substances in harmful quantities into or on U.S. navigable waters. In December 2013, the USEPA’s VGP went into effect. This standard does not cover lock and dam equipment or hydropower facilities, but rather vessels. The standard covers 27 ship discharges that are incidental to normal commercial vessel operations. The law affects any commercial vessel over 79 ft that provides transportation and operates within the 3-mile territorial waters, Great Lakes, and inland waterways of the United States. The standard basically requires EA lubricants and fluids for systems with “oil-to-sea” interface such as wire rope, thrusters, stern tubes, propulsion drives, etc.

Figure 13-1. Bonneville Dam Spillway on Columbia River.

b. Expectations from EA lubricants. One issue with EA lubricants is ensuring that the lubricants meet all the performance requirements at USACE facilities. In principle, EA lubricants should meet the same general performance characteristics, such as lubricity, viscosity, flow at hot and cold temperatures, thermal stability, and seal compatibility as mineral oil-based products. EA lubricants first and foremost should meet or exceed the lubrication requirements of the machinery and components. Regardless of whether petroleum-based lubricants or synthetic lubricants and/or environmentally acceptable lubricants are used, the lubricant needs to meet the required performance criteria. The lubricants have to be specified for the equipment and for the worst case conditions under which the equipment will run. This will include extreme temperature conditions. There are many environmentally acceptable lubricants that may meet the performance requirements for machinery drive systems. These have to meet the extreme requirements of the equipment otherwise they should not be used. Any use of environmentally lubricants should be trial tested. An effective trial test would duplicate the environmental and service conditions as closely as possible while testing only over a limited sample.

c. Environmentally acceptable lubricants for machinery are becoming more prevalent. The three basic environmental-based lubricants include PAGs, synthetic esters, and biobased lubricants. Some PAO hydraulic oils can be considered as EA lubricants. Traditionally, PAOs are not good candidates for EA fluids, but recent developments in the industry have changed that. If considering PAOs as an EA lubricant, the manufacturer should be consulted. The types of EA lubricants will be further discussed below. Both PAG and synthetic esters and some PAOs have been used in hydraulic systems with success. Not all environmentally acceptable lubricants are compatible with petroleum mineral-based oils especially PAG lubricants. For end users such

as USACE facilities, there are a number of challenges including a lack of guidelines and standards, a lack of historical data and performance data, and higher prices.

13-2. Definition of Environmentally Acceptable (EA) Lubricants.

a. The lubrication industry uses a variety of terms to address "environmental" lubricants. A few of these terms, all preceded by the term "environmentally," are: "acceptable," "aware," "benign," "friendly," "harmless," "safe," "sensitive," and "suitable." Two other commonly used terms are "green fluids" and "food grade" lubricants. The term green fluid is mostly used for lubricants manufactured from vegetable oil. Food grade lubricants are rated by the U.S. Department of Agriculture (USDA) and generally are used in the food industry where incidental food contact may occur. These are discussed further below. "Environmentally acceptable" is the most commonly used term and will be used in this manual. The USEPA uses the term environmentally acceptable in EPA 800-R-11-002. As of the writing of this engineering manual, USACE has not adopted a formal definition for EA lubricants. However, EA lubricants should meet at least meet one of three general requirements (further discussed below):

- They must be a product labeled by Blue Angel, Swedish Standard, Nordic Swan, European Eco-label, and/or Ospar. Other product labeling could be considered by an Environmental Officer.
- They must be a product classified as USEPA Vessel General Permit (VSG) Appendix A compliant.
- They must have test data as specified in USEPA 800-R-2-001 or in USEPA Vessel General Permit document, Appendix A (further described below), indicating that they meet requirements for bioaccumulation, toxicity, and biodegradability. Such data may be presented as test reports or reported on product specification sheets.

b. Food grade lubricants are not the same as EA lubricants and may or may not qualify as EA lubricants. The term "food grade lubricant" should not be used interchangeably with "environmentally acceptable" lubricant. They have different performance requirements. Most food grade lubricants are made of U.S. Pharmacopeia (USP) White Mineral Oil, which is not toxic, but which sometimes does not meet the biodegradability criteria commonly required of EA lubricants. Food grade lubricants are lubricants acceptable for use in meat, poultry, and other food-processing equipment, applications, and plants. The lubricant types in food grade applications are broken into categories based on the likelihood they will contact food. The U.S. Department of Agriculture (USDA) created the original food grade designations H1, H2, and H3, which is the current terminology used.

c. Manufacturers and end users agree that for a lubricant to be classified as an EA type it should be biodegradable and nontoxic and have a low potential for bioaccumulation. EPA 800-R-11-002 defines this. The standard ASTM D6046, "Standard Classification of Hydraulic Fluids for Environmental Impact," also defines this. Fluid chemistry should also be evaluated. This means that the lubricant should not have any heavy metals such as lead and mercury. The term "biodegradable" means that, if a small quantity of EA fluid is inadvertently spilled into the environment such as a waterway, it should readily break down and not harm fish, plants, or wildlife. This is also defined in EPA 800-R-11-002. The base oil used for the lubricant must be

biodegradable. The biodegradability of a lubricant reflects that of the lubricant's base oil, while the degree of aquatic toxicity is typically a consequence of the performance-enhancing additives (or thickening agents) within the formulation. The three most common categories of biodegradable base oils are: (1) biobased oils, (2) synthetic esters, and (3) PAGs. As noted previously, some PAO synthetic hydraulic oils can be considered as EA lubricants. PAO lubricants will not be discussed in depth in this chapter. The reader should refer to Chapter 4 for more discussion on PAO lubricants. It is recommended that the following guidance be used for qualifying the fluids to be environmentally acceptable in addition to the requirements noted above:

- They must be nontoxic according to EPA 560/6. That is, using test method EPA 560/6-82-002, concentrations greater than 1000 ppm of the test material are necessary to kill 50% of the test organisms in 96 hours (LC50>1000). This is discussed further below. The Organization for Economic Cooperation and Development (OECD) also has standardized tests for toxicity as does the U.S. Fish and Wildlife Service (USFWS).
- They must be readily biodegradable. That is, using the ASTM Test Method D5864, 60% or more of the test material carbon must be converted to CO_2 in 28 days. This is discussed further below.
- They must not have the potential for bioaccumulation in the environment. This is discussed further below.
- No heavy metals such as mercury or lead.

d. Currently, a majority of lubricant base oils (mineral oils) have the lowest biodegradation rate, a high potential for bioaccumulation, and a measurable toxicity toward marine organisms. In contrast, the base oils derived from biobased lubricants and synthetic esters degrade more quickly, have a smaller residual, do not bioaccumulate appreciably and have a lower toxicity to marine organisms. PAG-based lubricants are also generally biodegradable and do not bioaccumulate. However, some PAGs may be more toxic due to their solubility in water. On the basis of this simple comparison, lower environmental impacts will result if a greater proportion of base oils are manufactured from biologically-sourced materials.

e. U.S. standards and European standards organizations have developed several nationally recognized tests and procedures for demonstrating compliance with various environmental criteria such as biodegradability and toxicity. The ASTM Committee on Petroleum Products and Lubricants has formed a subcommittee, referred to as the Subcommittee on Environmental Standards for Lubricants, which is tasked with developing test methods for determining aerobic aquatic biodegradation and aquatic toxicity of lubricants. The methodology developed by this subcommittee, ASTM D5864, is one industry standard for determining the aerobic aquatic biodegradation of the lubricants.

f. Other Standards and Documents. A number of other documents are available that discuss EA lubricants. A number of these are listed in Appendix A. Some documents include:

(1) For hydraulic fluids, ASTM has developed the standard ASTM D6046 – 02 (2012) "Standard Classification of Hydraulic Fluids for Environmental Impact." MIL-PRF-32073A is a

military performance specification that covers biobased hydraulic fluids made with renewable resources for use in environmentally sensitive areas such as construction, forestry, river, and mining.

(2) The USEPA has developed the document: 800-R-11-002, *Environmentally Acceptable Fluids*. This USEPA document was written for ships and ship discharge into waterways, but directly applies to lubricants used at USACE facilities. It provides a good overview of the types of environmentally acceptable lubricants and their properties.

(3) ASTM STP 1521 (2012), "Testing and Use of Environmentally Acceptable Lubricants." With the increased interest in EA Lubricants, STP 1521 provides design and information for those in the agricultural, construction, forestry, lumber, and mining industries where involuntary or accidental fluid leakage or spillage is detrimental to the environment.

g. EA lubricants frequently use established European standards to demonstrate their products' compliance with U.S. criteria. Some of these standards include:

- ISO 15380:2011 specifies the requirements for environmentally acceptable hydraulic fluids. It is applicable to hydraulic systems, particularly hydraulic fluid power systems. The purpose of this international standard is to provide guidance for suppliers and users of environmentally acceptable hydraulic fluids, and to advise manufacturers of hydraulic systems. The standard also stipulates the requirements for environmentally acceptable hydraulic fluids at the time of delivery.
- Method CEC-L-33-A-94 developed by the Coordinating European Council (CEC). This standard determines the overall biodegradability of hydrocarbons, or similar compounds containing (CH2) methylene groups, measuring all transformations that the starting material undergoes, including oxidation and hydrolysis.
- Umweltbundesamt (UBA) RAL-UZ – Germany.
- UBA WGK Water Hazard – Germany (discussed further below).

13-3. Labeling Program. Various labeling programs are available in the marketplace for EA lubricants. Many of these are European Labeling Programs. The intent of these labeling programs is to minimize confusion over EA lubricants and to increase public awareness for environmentally preferable products. These labeling programs have defined and established methods to measure the properties of a lubricant that would qualify it as being environmentally acceptable. EPA 800-R-11-002, *Environmentally Acceptable Lubricants* (November 2011), discusses these labeling programs in greater detail. An excerpt and summary from USEPA 800-R-11 follows:

a. Blue Angel. One of the first national labeling programs for lubricants was the German Blue Angel label, developed in 1988. Criteria have been developed for several classes of lubricants, including hydraulic fluids, lubricating oils, and greases. To qualify for certification, a lubricant must possess the following characteristics: biodegradability; low toxicity to aquatic organisms; non-bioaccumulative; and no dangerous components (such as carcinogens or toxic substances as defined by Germany's Ordinance on Hazardous Substances). A product must also pass technical performance characteristics appropriate for its use. Blue Angel's requirement for ultimate biodegradability is the primary difference between the Blue Angel labeling certification

program and other national and international certification programs. Products receiving the Blue Angel certification must also pass a series of technical performance requirements that depend on the class of lubricant.

b. Swedish Standard. Another national labeling program for lubricants is the Swedish Standard, which includes standards for hydraulic fluids (SS 155434) and greases (SS 155470). Evaluation of a lubricant under the Swedish Standard involves testing for biodegradability and aquatic toxicity, as well as sensitizing properties of a lubricant formulation and its components. The Swedish Standard evaluates biodegradability using ISO test methods (e.g., ISO 9439), and has varying requirements, depending on class, for renewable resources content (SP 2010). The Swedish Standard is unique because it was conceived and developed as a collaborative project between government and industry.

c. Nordic Swan. The first international labeling program for EA lubricants was the Nordic Swan program, encompassing Norway, Sweden, Finland, Iceland, and Denmark. This program was initially introduced for hydraulic oil, two-stroke oil, grease, and transmission and gear oil. The Nordic Swan certification addresses biodegradability, aquatic toxicity (OECD 201 and 202), technical performance, and renewability. The renewability requirements are the highest of all the labeling programs (e.g., at least 65% renewable content for hydraulic fluid, transmission fluid, gear oil, or grease, and at least 50% for two-stroke oil).

d. European Eco-label. The European Union has adopted a single European Eco-label. The Eco-label is considered to be the first major advancement toward creating a single international standard, and is becoming the most generally accepted label. The Eco-label for lubricants was established in 2005, and includes hydraulic fluids, greases, and total loss lubricants, such as two-stroke oils. This labeling scheme consists of seven criteria encompassing biodegradability, aquatic toxicity, bioaccumulation, and the presence of certain classes of toxic substances.

13-4. Biodegradation.

a. Biodegradation. Biodegradable means the lubricant is fully decomposed by soil and water micro-organisms. The micro-organisms consume the lubricant, leaving natural substances like carbon dioxide and water in its place. A multitude of items affect the rate of biodegradation. This includes heat, humidity, and the oxygen supply. Biodegradation is defined as the chemical breakdown or transformation of a substance caused by organisms or their enzymes. Primary biodegradation is defined as a modification of a substance by micro-organisms that causes a change in some measurable property of the substance. Ultimate biodegradation is the degradation achieved when a substance is totally used by micro-organisms resulting in the production of carbon dioxide, methane, water, mineral salts, and new microbial cellular constituents. Ultimate biodegradation is directly related to the complete biodegradation, while primary biodegradation is related to the partial biodegradation of a fluid. The results of tests measuring the primary and/or ultimate biodegradation are often used to label a fluid with classifications as either readily or inherently biodegradable. Readily biodegradable is defined in Table 13-1. A lubricant that is readily biodegradable is one that exhibits rapid Ultimate Biodegradation. Lubricants that are not readily biodegradable and only inherently biodegradable will not be considered by USACE to be environmentally acceptable. Inherent biodegradability is only an indicator of whether a substance has any potential for biodegradation. Many substances will biodegrade, but it may take years for them to do so.

Table 13-1. Summary of Differential Biodegradation Rates by Lubricant Base Oils

Lubricant base oil	Base oil source	Biodegradation
Mineral oil	Petroleum	Persistent /inherently
PAGs	Petroleum - synthesized hydrocarbon	Readily
Synthetic Ester	Synthesized from biological sources	Readily
Vegetable Oils	Naturally occurring vegetable oils	Readily
Source: EPA 800-R-11, *Environmentally Acceptable Lubricants* (November 2011).		

b. Tests. ASTM Test Method D5864-11 is one method to determine lubricant biodegradation. This test determines the rate and extent of aerobic aquatic biodegradation of lubricants when exposed to an inoculum under laboratory conditions. The inoculum may be the activated sewage-sludge from a domestic sewage-treatment plant, or it may be derived from soil or natural surface waters, or any combination of the three sources. The degree of biodegradability is measured by calculating the rate of conversion of the lubricant to CO_2. A lubricant, hydraulic fluid, or grease is classified as readily biodegradable when 60% or more of the test material carbon is converted to CO_2 in 28 days, as determined using this test method. There are other ASTM test methods that define biodegradability. This includes:

(1) ASTM D6731, "Standard Test Method for Determining the Aerobic, Aquatic Biodegradability of Lubricants or Lubricant Components in a Closed Respirometer." The ASTM D6731 Biodegradation Test is a version of OECD 301F, The Manometric Respirometry Test, and is known as the modified Biochemical Oxygen Demand (BOD) Test. This closed respirometer test was also designed to determine the degree of biodegradability of lubricants or their components in an aerobic aqueous medium on exposure to an inoculum under laboratory conditions. Unlike the ASTM D5864 test, the biodegradation of a lubricant is determined by measuring the oxygen consumption of micro-organisms instead of the carbon conversion of the test sample. This approach was developed based on the assumption that a large amount oxygen uptake of micro-organisms indicates more micro-organisms' growth or generation and takes more carbon conversion of the test sample leading to carbon dioxide production by an enzyme process. For this reason, the respirometer test is currently considered as an indirect biodegradation test of lubricants, and its biodegradability is expressed as the percentage of maximum oxygen consumption under well-controlled conditions for a period of 28 days. The sample and medium preparation is almost identical to that of an ASTM D5864 test sample. Advantages of this method are that it requires less manpower and its closed system is suitable for evaluating the biodegradation of volatile lubricants. Disadvantages of this method are its indirectly measurement of biodegradation of lubricants and poor test precision. Because of its measuring technique and the cost of test apparatus, this method is not widely used within industry.

(2) ASTM D6139, "Standard Test Method for Determining the Aerobic Aquatic Biodegradation of Lubricants or Their Components Using the Gledhill Shake Flask." The ASTM D6139 Biodegradation Test is a version of the USEPA (Gledhill) Shake Flask Test and is very similar to ASTM D5864 Biodegradation Test except for agitating solution. The test was designed to determine degree of aerobic aquatic biodegradation of lubricants on exposure to an inoculum under laboratory conditions. The biodegradability of lubricants is expressed as percentage of maximum

(theoretical) carbon conversion (or carbon dioxide generation) under well-controlled conditions for 28 days. The test apparatus is specially designed to agitate the test solution and the carbon dioxide is collected using a Gledhill Shake Flask System. In this test, 60 % of biodegradability or above is considered as readily biodegradation. However, this test also requires a long testing time (28 days), the knowledge of micro-organisms, and skilled manpower in some cases. In addition, it has very poor test precision due to the various and multiple inoculums sources. For these reasons, it is very difficult to use in petroleum laboratories for assessing the biodegradability of lubricants.

(3) ASTM D7373, "Standard Test Method for Predicting Biodegradability of Lubricants Using a Biokinetic Model." The ASTM D7373 test method is a biokinetic model to predict the biodegradability of lubricants using an ASTM compositional analysis technique and the fundamental microbiological theory. This biokinetic model requires compositional analysis data of lubricants and some of formulation information related to the types of base oils used in the lubricants. The biokinetic model does not require any biodegradation test apparatus and inoculums. The advantages of this model is: (1) its predictable capability for the biodegradability of lubricants within a day, and (2) its excellent correlation with results obtained from the ASTM D5864 (Modified Sturm Test) and the ASTM D6731 test.

c. Other Biodegradability Test Methods. Other test methods used by the lubricant industry for evaluating the biodegradability of their products are Method CEC-L-33-A-94 developed by the CEC and the OECD 301 A-F Readily Biodegradable tests. The OECD tests are some of the most commonly recognized series for determining ultimate biodegradability in an aerobic aqueous medium. Specific tests include Method OECD 301B, the Modified Sturm Test and Method EPA 560/6-82-003, number CG-2000, the Shake Flask Test, adapted by the USEPA. When selecting an EA lubricant, it is important to determine what standard the manufacturer is using for biodegradability. These tests also determine the rate and extent of aerobic aquatic biodegradation under laboratory conditions. The Modified Sturm Test and Shake Flask Test also calculate the rate of conversion of the lubricant to CO_2. The CEC test measures the disappearance of the lubricant by analyzing test material at various incubation times through infrared spectroscopy. Laboratory tests have shown that the degradation rates may vary widely among the various test methods indicated above. The discussed test methods include:

- Method CEC-L-33-A-934, CEC.
- Method OECD 301B, Organization for Economic Cooperation and Development (OECD).
- Method EPA 560/6-82-003, number CG-2000, adapted by the USEPA, Test and Test Method is exactly the same as the OECD 301B Test.

13-5. Toxicity. This is also referred to as ecotoxicity. One general definition for toxicity is that it does not poison animals, fish, or plants. Some biodegradable products are toxic. Ecotoxicity ratings for EA fluids are measured in concentrations of the fluid that may cause toxicity to the environment, which includes toxicity effects on aquatic environment, soil contamination, avian species, and mammals.

a. Toxicity of a substance is generally evaluated by conducting an acute toxicity test. The most common test methods used by the lubricant industry for evaluating the acute toxicity of

their products are EPA 560/6-82-002, Sections EG-9 and ES-6; and OECD 203. These tests determine the concentration of a substance that produces a toxic effect on a specified percentage of test organisms in 96 hours. Toxicity is expressed as concentration in parts per million (ppm) of the test material that results in a 50% mortality rate after 96 hours (LC50). A substance is generally considered "relatively harmless" if aquatic toxicity (LC50) exceeds 1000 ppm. That is, a lubricant or a hydraulic fluid is generally considered "relatively harmless" if a concentration of greater than 1000 ppm of the material in an aqueous solution is needed to achieve a 50% mortality rate in the test organism. There are also categories for "practically nontoxic," "slightly toxic," "moderately toxic," etc. The highest category is "super toxic."

b. The USFWS also has a rating system for toxicity. The scale ranges from relatively harmless to super toxic. The USFWS Research Information Bulletin No. 84-78, "Acute Toxicity Rating Scales," issued August 1984, defines the ecotoxicity for the aquatic environment (acute toxicity), in terms of concentration levels measured for an effect concentration, EC50 and lethal concentration, LC50. The USFWS definitions for these acute toxicity concentrations for the aquatic environment are:

- LC50: a 96-hour LC50 value is the concentration of chemical that would be lethal to 50% of a population of the test organisms (invertebrates, fishes, and amphibians) within 96 hours.
- EC50: Toxicity to some invertebrates (daphnids and midge larvae), expressed as 48 hour EC50, is the estimated concentration of chemical that would produce an effect (immobilization, loss of equilibrium, etc.) within 48 hours.

c. For use in USACE facilities, an EA lubricant should be rated to meet or exceed the minimum requirements of EPA 560 and the noted USFWS standard as follows:

- EC50 or LC50 concentration levels defined for "Practically Nontoxic" rating as defined by USEPA (and USFWS), or
- IC50 concentration level defined by USFWS. Table 13-3 lists USFWS and USEPA labels for toxicity, for comparison.

Table 13-2. Summary of Comparative Toxicity of Base Oils.

Lubricant base oil	**Base oil source**	**Toxicity**
Mineral oil	Petroleum	High
PAGs	Petroleum - synthesized hydrocarbon	Low
Synthetic Ester	Synthesized from biological sources	Low
Vegetable Oils	Naturally occurring vegetable oils	Low
Source: EPA 800-R-11 *Environmentally Acceptable Lubricants* (November 2011).		

Table 13-3. USFWS and USEPA Acute Toxicity Rating Scales for Aquatic Organisms.

Relative Toxicity	**USFWS EC50 or LC50 (mg/L or ppm)**	**USEPA LC50 (ppm)**
Super Toxic	< 0.01	Not Defined
Extremely Toxic	0.01-0.1	< 0.1
Highly Toxic	0.1-1.0	0.1-1
Moderately Toxic	1.0-10.0	>1-10
Slightly Toxic	10-100	>10-100
Practically Nontoxic	100-1000	>100
Relatively Harmless	>1000	Not Defined
Source: USFWS Research Information Bulletin 84-78, *Acute Toxicity Rating Scales* (1984).		

d. The water polluting classification in Germany (Wassergefährdungsklasse or WGK) has also become an important part of assessing the environmental impact of lubricants. The WGK stipulates what steps should be taken in case of an oil spill and the safety measures required for handling, manufacturing, and storing products. The class is assigned to a substance depends on its WKZ water endangering number (WEN), which is obtained from toxicity measurements on mammalian fish and bacterial activity, here the higher the number, the higher the toxicity. Three is the highest rating, and zero is the lowest.Note that WGK 0 has now been re-named to “non-water endangering” (NWG).

13-6. Bioaccumulation. Bioaccumulation is the buildup of organic chemicals in the fatty tissues of an organism over time. This is harmful to the organism and can pass up the food chain. The propensity of a substance to bioaccumulate is another property of a lubricant that is often considered in the qualification of a product as an EA lubricant. The longer the organism is exposed to a chemical and the longer the organism lives, the greater the accumulation of the chemical in the tissues. If the chemical has a slow degradation rate or low depuration rate within an organism, concentrations of that chemical may buildup in the organism’s tissues and may eventually lead to adverse biological effects. It is therefore desirable to use compounds in formulations that do not bioaccumulate. It may not be possible to phase out all bioaccumulating compounds, but it is feasible to use chemicals that have a lower bioaccumulation potential, either through not being taken up as readily or by degrading more quickly both in the environment and in the organism.

a. The bioaccumulation potential of a compound is directly related to its water solubility; chemicals that are not water soluble tend to move into fatty tissues rather than to staying in water. These lipophilic chemicals include most of the compounds used in the manufacture of the base oil in lubricants. The water solubility of a compound is related to the type of atoms in the molecule; compounds comprised solely of carbon and hydrogen tend to have the lowest solubility in water. Compounds of this type includes alkanes, which form almost 90% of the current base oil in conventional lubricant formulations. The inclusion of one or more oxygen atoms in a molecule will, in general, increase the water solubility and reduce bioaccumulation. Compounds with oxygen also tend to degrade more quickly in the environment, or tend to be

excreted more quickly from organisms. The USEPA Vessel General Permit, Appendix A, defines requirements for bioaccumulation as follows:

- The partition coefficient in the marine environment is log KOW <3 or >7 using test methods OECD 117 and 107,
- Molecular mass > 800 Daltons,
- Molecular diameter >1.5 nanometer,
- BCF or BAF is <100 L/kg, using OECD 305, OCSPP 850.1710 or OCSPP 850.1730, or a field-measured BAF, or
- Polymer with MW fraction below 1,000 g/mol is <1%.

b. Certain labeling programs, most notably the European Eco-label, require demonstration that a product is not bioaccumulative (Table 13-4).

Table 13-4. Summary of Bioaccumulation Potential by Base Oil Types.

Lubricant base oil	**Base oil source**	**Potential for Bioaccumulation**
Mineral oil	Petroleum	Yes
PAGs	Petroleum - synthesized hydrocarbon	No
Synthetic Ester	Synthesized from biological sources	No
Vegetable Oils	Naturally occurring vegetable oils	No
Source: EPA 800-R-11 *Environmentally Acceptable Lubricants* (November 2011).		

13-7. EA Base Fluids and Additives. The base fluids discussed herein may be used for preparation of hydraulic fluids, lubrication fluids, or greases. Environmental tests referred to in this manual are applicable to all three types of products. Base fluids are mixed with additives to form the final products. These additives are necessary because they provide the resulting end product with physical and chemical characteristics such as oxidation stability, foaming, etc., required for successful application. However, most additives currently used for mineral-based oil are toxic and non-biodegradable. Therefore, they cannot be used with EA fluids. Furthermore, since the physical and chemical properties of EA fluids are quite different from those of mineral oil, EA fluids will require entirely different additives. Additives that are more than 80% biodegradable are available. Sulfurized fatty materials (animal fat or vegetable oils) are used to formulate extreme pressure/antiwear additives, and succinic acid derivatives are used to produce ashless (no metal) additives for corrosion protection. Suppliers are using a variety of base fluids to formulate EA hydraulic fluids, lubricating oils, and greases. The base fluid may be the same for all three products. For example, a biodegradable and nontoxic ester may be used as the base fluid for production of hydraulic fluid, lubricating oil, and grease.

a. Because the majority of a lubricant is composed of the base oil, the base oil used in an EA lubricant must be biodegradable. The three most common categories of biodegradable base

oils (Table 13-5) are: (1) biobased oils (vegetable oils), (2) synthetic esters, and (3) PAGs. PAG lubricants are also a synthetic type of lubricant and are available in two primary types. This includes water soluble and water insoluble types. Water soluble types can be used as EA lubricants. As noted earlier, some PAOs can be used as EA lubricants. PAOs are discussed further in Chapter 4 and below. Due to the low toxicities of the EA base oils, aquatic toxicity exhibited by lubricants formulated from them is typically a consequence of the performance-enhancing additives or thickening agents (found in greases) used in the formulation, which can vary widely. Natural and synthetic esters and PAG all possess inherently good lubricity properties as their polar nature gives a greater affinity for metal surfaces than non-polar mineral oils. Consequently, the need for antiwear additives is reduced, calling for lower concentrations of generally more toxic antiwear agents.

Table 13-5. Biodegradability and Thermal Stability of EA Base Oils.

Parameter	**Mineral**	**Biobased**	**Synthetic**
Biodegradability	Very Low	Very High	High
Temperature Range	Wide	Moderate	Very Wide
Oxidative Stability	Good	Moderate	Very Good
Thermal Stability	Good	Moderate	Very Good
Mineral Oil Miscibility	Yes	Yes	Varies

b. Biobased Lubricants. Biobased lubricants are primarily crop and vegetable-based. These include vegetable oil, rapeseed oil, sunflower oil, coconut oil, palm oil, or soybean oil. These are considered biodegradable fluids. Biobased lubricants, in particular crop-based grease products, tend to have poor low temperature performance and to degrade at high operating temperatures. Biobased lubricants, however, can be considered for hydraulic fluids. Vegetable oil production reaches the billions of gallons in the United States. However, few are usable for formulating EA lubricants. The usable vegetable oils can offer excellent lubricating properties, are nontoxic and highly biodegradable, relatively inexpensive compared to synthetic fluids, and are made from natural renewable resources. In general, biobased (in particular crop-based) lubricants have the following properties:

- Poor high temperature performance (in particular grease products).
- Narrow viscosity operating range.
- Rapid oxidation at high temperatures and have poor thermal stability (in particular grease products).
- Tendency to thicken and gel at low temperatures (in particular grease products).
- Good biodegradability.
- Relatively inexpensive.

(1) Rapeseed oil (canola oil), is a base for the most popular of the biobased hydraulic fluids. The first rapeseed-based hydraulic fluids were commercially available in 1985. Laboratory tests have

identified limits to the use of this oil, but extensive practical experience has yielded relatively few problems. The quality of this has improved over time, and it has become increasingly popular, but it has problems at both high and low temperatures and tends to age rapidly. The cost of rapeseed oil is approximately double that of mineral oil, which makes it more affordable than many alternative EA lubricants.

(2) The benefits of rapeseed oil include its plentiful supply, excellent lubricity, and high viscosity index and flash point. RO is highly biodegradable. Rapeseed oil possesses good extreme pressure and antiwear properties, and readily passes the Vickers 35VQ25 vane pump wear tests. It offers good corrosion protection for hydraulic systems and does not attack seal materials, varnish, or paint. Mixing with mineral oil is acceptable and has no influence on oil performance. Rapeseed oil is not water soluble and is lighter than water. Escaped oil can be skimmed off the surface of water. Molecular weight is high, indicating low volatility and low evaporation loss.

(3) Concerns about rapeseed oil include poor low temperature fluidity and rapid oxidation at high temperatures. Biobased oil lubricants, including rapeseed, castor, and sunflower oils, tend to age quickly. At high temperatures, they become dense and change composition; at low temperatures, they thicken and gel. This has been an issue with EA grease products. Some rapeseed oil products are not recommended for use in ambient temperatures above 90 °F (32 °C) or below 21°F (–6 °C), but other products gel only after extended periods below 0 °F (–18 °C) and will perform well up to 180°F (82 °C). The major problem with rapeseed oil is its high content of linoleic and linolenic fatty acids. These acids are characterized by two and three double bonds, respectively. A greater number of these bonds in the product results in a material more sensitive to and prone to rapid oxidation. These problems can be only partially controlled by antioxidants. Refining the base oil to reduce these acids results in increased stability. Testing indicates that biobased oils with higher oleic content have increased oxidative stability. Genetic engineering has produced rapeseed and sunflower oils with high oleic content for applications requiring better oxidation stability.

(4) Conversion to biobased fluids should present few problems, as all are mixable with mineral oil. However, contamination with mineral oil should be kept to a minimum so that biodegradability will not be affected. Special filter elements are not required. Filters should be checked after 50 hours of operation, as vegetable oils tend to remove mineral oil deposits from the system and carry these to the filters. Filter-clogging indicators should be carefully monitored, as filter element service life may be reduced in comparison to mineral oil operation.

c. Synthetic Esters (SEs). SEs are made by reacting acids and alcohols from petrochemical processes. SEs have been in use longer than any other synthetic-based fluid. They were originally used as aircraft jet engine lubricants in the 1950s and still are used as the base fluid for almost all aircraft jet engine lubricants. For EA base lubricants, the most commonly used SEs are polyol esters; the most commonly used polyol esters are trimethylolpropane and pentaerithritol. Hydraulic fluids are one common use of SEs and are classified as HEES fluids (see Chapter 10).

(1) SEs are made from modified animal fat and vegetable oil reacted with alcohol. While there are similarities between rapeseed oil and SEs, there are important differences. Esters are more thermally stable and have much higher oxidative stability.

(2) SE fluids can be regarded as one of the best biodegradable hydraulic fluids. This type of hydraulic fluid is used extensively on European navigation structures and has been in use for decades. See Chapter 10 for more discussion. SEs with suitable additives can also be nontoxic. They perform well as lubricants. They have excellent lubrication properties including a high viscosity index and low friction characteristics. Their liquidity at low and high temperatures is excellent, as is their aging stability. Although they mix well with mineral oils, this characteristic negatively influences their biodegradability. SE fluids offer good corrosion protection and lubricity and usually can be used under the same operating conditions as mineral oils. They are applicable for extreme temperature range operations and appear to be the best biodegradable fluids for heavy duty or severe applications. SEs do have higher first cost and are incompatible with some paints, finishes, and some seal materials. However, it may be possible to extend oil-change intervals and partially offset the higher cost.

(3) There are two primary types of SEs, including unsaturated esters and saturated esters. In general, saturated esters will have better performance requirements for typical USACE navigation structures. As such, only saturated esters should be considered. In general, saturated esters have the following properties:

- Excellent thermal and oxidation stability.
- High viscosity index.
- Oxidation stability.
- Ability to separate from water easily and quickly.
- Ability to operate at high pressures with no issues.
- Excellent rust prevention.
- Mixable with mineral oil (in most cases).
- In most cases, ability to work well with nearly all sealing materials.
- Low pour point of at least –58 °F (–50 °C).
- Ability to separate from water easily and quickly due to a fully saturated ester compound.
- Ability to operate at high pressures with no issues.
- High flash point.

(4) Since SE fluids are miscible with mineral oil, conversion may be accomplished by flushing the system to reduce the residual mineral oil content to a minimum. Special filter elements are not required.

d. PAGs. PAGs are a mix of propylene and ethylene oxides. The use of the water soluble type is the most common and is the type used for EA lubricants. The use of polyglycols needs to be balanced with their aquatic toxicity when mixed with lubricating additives and their incompatibility with mineral oils and seal materials. Polyglycol hydraulic fluids have been available for several decades and are widely used, particularly in the food-processing industry. The common hydraulic fluid is HEPG — hydraulic environmental poly glycol (a water soluble

poly alkylene glycol). They also have been used since the mid-1980s in construction machinery and a variety of stationary installations. They were the first biodegradable oils on the market. The biodegradability of PAG-based products depends on the relative percentage of ethylene/propylene oxide in the polymer, i.e., the higher the proportion of ethylene oxide, the more biodegradable the product. The major disadvantage of PAG-based products is their poor compatibility with seals, gaskets, and linings, and poor miscibility with standard mineral oils. They can also be incompatible with a number of paint systems and varnishes. Because of this incompatibility, they may have the highest changeover costs of any class of EA lubricant.

(1) PAG fluids have the greatest stability with a range from –49 to 482 °F (–45 to 250 °C). PAG lubricants excel where fire hazard is a concern. Oil-change intervals are similar to those for a mineral oil: 2000 hours or once a year.

(2) PAG oils are not compatible with mineral oils and may not be compatible with common coatings, linings, seals, and gasket materials. They must be stored in containers free of linings. Some PAG oils do not biodegrade well. The rate and degree of biodegradation are controlled by the ratio of propylene to ethylene oxides, with polyethylene glycols being the more biodegradable. The rate and extent of biodegradability diminish with increasing molecular weight. Some characteristics of PAG oils include:

- Water emulsion leads to the formation of steam bubbles at operating temperature, which may cause cavitation of pumps and de-rating of components.
- Incompatibity with paints, filter materials, gaskets, and seals.
- Inability to be mixed with mineral oils. Such mixing can cause catastrophic failure to a hydraulic system.
- Tendency to produce aquatic toxicity that can bioaccumulate when mixed with lubricating additives.
- Excellent low temperature flow capabilities.
- Excellent high temperature oxidation stability.
- Inability to provide rust prevention.
- Excellent hydrolytic stability (can hold high amounts of water in solution)
- High viscosity index.

(3) When a hydraulic system is converted from mineral oil to PAG, it is essential that the oil supplier’s recommendations be followed. Normally, total system evacuation and one or two flushing procedures are required to avoid any mixing with previously used mineral oil. Mineral oil is less dense than PAG fluids so any residual mineral oil will float to the top and must be skimmed off. According to the manufacturer’s recommendations, the final residual quantity of mineral oil may not exceed 1% of the total fluid volume. Mineral oil must not be used to replace lost PAG fluid, and other contamination of PAG with mineral oil must be avoided. Compatibility with varnish, seal, and filter materials also must be considered. Paper filters may need to be replaced with glass fiber or metal-mesh filters, and these should be checked after the first 50 hours of operation. The filters will retain any residual mineral oil and may become clogged. Because of their excellent wetting

properties, PAG fluids tend to remove deposits left from operation with mineral oil, and these deposits are carried to the filter. PAG lubricants are soluble in water so water must be excluded from the system.

e. PAO Lubricants. PAO lubricants have typically not been used for environmentally acceptable applications. However, that is rapidly changing. There are several manufacturers that are producing hydraulic fluid that is chemically identical to PAOs. Normally, PAO base oils are not biodegradable. It was noted in Chapter 4 that API Group IV base oils are PAOs. These synthetic base oils are made through a process called synthesizing. The most common hydraulic oil-based PAO is HEPR and related fluids (water insoluble poly alpha olefins [PAO] and related hydrocarbon-based fluids). The PAO lubricants are typically initially produced with ISO light viscosity grades and then chemically modified (viscosity modifiers) to produce higher ISO viscosity grades. When considering PAOs as an environmentally acceptable lubricant, it is imperative to work with the manufacturer and supplier.

f. Water. Water is currently being used in some hydraulic systems for navigation in Germany. Water hydraulic systems are also being considered and experimented with on dredges within USACE. With the prospect of increasingly stringent environmental restrictions on the use of mineral oil-based hydraulic fluids, water may become a practical alternative. Pure water has poor lubricity and cannot function as a lubricant in the traditional sense, but water has been used as hydraulic fluid in specialty applications where leakage contamination and fire hazard are major concerns. New designs and use of highly wear-resistant materials have opened up possibilities for new water hydraulic applications. The rate and extent to which water hydraulics are adopted depends on the motivation for further technical development and EA additive development by lubricant producers. Reasons to use water include:

- Water can be purchased at a fraction of the cost of mineral oils and other EA lubricants.
- Water disposal has little or no impact on the environment.
- Water is nonflammable and can be used where high temperatures and oils could create fire hazards.
- Water has better thermal conductivity than oil and can transfer heat better allowing smaller heat exchanger to be used.
- Water’s incompressibility makes it ideal for accurate actuator positioning, whereas oil may be sluggish and imprecise.

(1) Water does have several performance drawbacks, however. Conventional hydraulic oil system components will not work with water, and modifying oil system components for water has had poor results. Component manufacturers are now designing parts specifically for water and are having good results. The following list describes performance drawbacks of water and solutions for overcoming them:

- Water has low viscosity so leakage is a concern. Components with tighter clearances are being manufactured to compensate for this.

- Water has low viscosity and low film strength, which means lower lubricity and higher wear. Also, water corrodes metal parts. Stainless steel and high-strength plastic and ceramic bearings and component parts designed for high wear resistance are being developed.
- Water has higher vapor pressure than mineral oil, which makes it more prone to cause cavitation. Pumps are being manufactured with smoother and larger flow areas and throttling valves are being redesigned with innovative flow geometries to mitigate the cavitation potential.
- Water freezes. Nontoxic antifreezes have been developed to lower water's freezing point and pour point.

13-8. Properties of Available EA Lubricants.

a. Table 13-6 lists the ecotoxicological properties and physical properties of the most widely used EA fluids, as compared with conventional mineral-based oils. Paragraphs 13-9 and 13-10 discuss cost. It is imperative that a cost comparison include the expenses for changing over to the EA oils, which may be substantial. PAG may require total evacuation of the system plus one or two flushes. Disposal costs for EA oils may be greater than disposal costs for mineral oils because recyclers may not accept them. As previously noted, laboratory tests have shown that the degradation rates may vary widely among the various biodegradation test methods. The data in Tables 13-5 and 13-6 indicate that the biobased fluids and synthetic ester-based fluids, if formulated properly, are readily biodegradable. The toxicity tests show that the base stocks of most EA lubricants are nontoxic. The wide range of toxicity of the oils listed in Tables 13-5 and 13-6 is caused by additives in the formulated products.

Table 13-6. Relative Comparisons of Various Types EA Lubricants.

Parameter	**Fluid Type**			
	Biobased	**Synthetic Ester**	**Polyglycol**	**PAO**
Viscosity Index ASTM D2270	Varies – some hydraulic fluids from 100 to 200	120-200	100-200	140-160
Water solubility	Low solubility	Low solubility	Soluble	Low solubility
Miscibility (mixing) with Mineral Oil	Good	Good	Not Miscible	Good
Low temperature performance	Weak	Good	Good	Good
Oxidation resistance	Weak	Good	Good	Good
Hydrolytic stability	Low	Medium	Good	Good

Seal material compatibility	Limited/Good	Limited	Limited	Good
Paint compatibility	Good	Limited/Good	Limited	Good
Additive solubility	Good	Good	Moderate	Limited/Good
Lubricity of base fluid	Good	Good	Limited/Good	Limited/Good
Corrosion resistance	Poor	Limited/Good	Limited	Good
Renewability content	High	Variable	None	Variable
Biodegradability	Good	Good	Moderate/Good	Poor/Moderate/Good
Toxicity, LC50, (Rainbow) Trout, EPA 560/6-82-002	633 - > 5000	>5000	80 - > 5000	100 - >5000

b. Oxidation Stability. One of the most important properties of lubricating oils and hydraulic fluids is their oxidation stability. Oils with low values of oxidation stability will oxidize rapidly in the presence of water at elevated temperatures. When oil oxidizes it will undergo a complex chemical reaction that will produce acid and sludge. Sludge may settle in critical areas of the equipment and interfere with the lubrication and cooling functions of the fluid. The oxidized oil will also corrode the equipment. Oxidation stability is normally measured by test method ASTM D943. This test, commonly known as the Turbine Oil Stability Test (TOST), is used to evaluate the oxidation stability of oils in the presence of oxygen, water, and iron-copper catalyst at an elevated temperature. The TOST life of mineral oil is typically more than 1000 hours. SEs and polyglycols are hydrolytically less stable than mineral oils at elevated temperatures, resulting in shorter TOST lives. However, it has been shown that formulated SEs with proper additives will produce high TOST values. Biobased oils, on the other hand, can have a TOST life of less than 75 hours.

c. Lubricity. Lubricity is the degree to which an oil or grease lubricates moving parts and minimizes wear. Lubricity is usually measured by test method ASTM D2266, commonly known as the “Four-Ball Method.” Laboratory tests have shown that EA lubricants normally produce good wear properties.

d. Pour Point. Pour point defines the temperature at which an oil solidifies. When oil solidifies, its performance is greatly compromised. Pour point is normally evaluated by test method ASTM D97. The low temperature fluidity of biobased fluids is poor compared to other fluids listed in Table 13-6. However, the pour point of biobased hydraulic fluids and lubricants may be acceptable for many applications.

e. Viscosity Index. Viscosity index (VI) is a measure of the variation in the kinematic viscosity of oils as the temperature changes. The higher the viscosity index, the less the effect of

temperature on its kinematic viscosity. VI is measured by test method ASTM D2270. As the data in Table 13-6 show, the VI of most EA fluids meets or exceeds the VI of petroleum-based fluids.

f. Foaming. The tendency of oils to foam can be a serious problem in lubricating and hydraulic systems. The lubrication and hydraulic properties of oils are greatly impeded by excessive foaming. Foaming characteristics of oils are usually determined by test method ASTM D892. Laboratory tests have shown that most formulated EA fluids do not have foaming problems. This should be verified with the manufacturer.

g. Paint Compatibility. Some common paints used in fluid systems are incompatible with many EA fluids especially PAG lubricants. When it is anticipated that EA fluids may be used in a fluid system, the use of epoxy resin paints should be used to eliminate potential compatibility problems.

h. Elastomeric Seal Compatibility. Polyurethane seals should not be used with EA fluids. Instead, the use of Viton and Buna-N (low to medium nitrile) is recommended. EA fluids are compatible with steel and copper alloys and provide excellent rust protection. The fluid manufacturer must be consulted for specific compatibility data for each material encountered in the application.

i. Degradability. EA lubrication fluids are especially susceptible to degradation caused by water. Since EA fluids are biodegradable, they will break down in the presence of water and bacteria. Moisture traps in breather intakes and other equipment modifications that will keep moisture out of the system should be considered. EA fluids should be periodically monitored to ensure that biodegradation is not occurring. Water levels in the fluid and system need to be kept to an absolute minimum and should never exceed 500 ppm.

13-9. Changing from Conventional to EA Lubricants.

a. Plant owners and operators considering a change to biodegradable lubricants and hydraulic fluids should, above all, be aware that these products are not identical to conventional mineral oil products. Furthermore, the EA fluids are not necessarily equal to one another. It is important to make a thorough assessment of the requirements of the specific application to determine whether a substitution can be made, and whether any compromises in quality or performance will be compatible with the needs of the user. Switching to EA products may require special considerations, measures, or adaptations to the system.

b. Some commercially available synthetic ester and biobased lubricants meet the requirements of nontoxicity and biodegradability. However, the compatibility of these fluids with existing materials encountered in the application, such as paints, filters, and seals, must be evaluated. This includes a testing program if necessary. The fluid manufacturer must be consulted for specific compatibility data for each material of construction. The manufacturer of the existing equipment must be consulted, especially when the equipment is still under warranty.

c. Extreme care must be taken when selecting an EA oil or grease for an application. Product availability may be impacted due to the dynamic nature of developing standards and environmental requirements. EA lubricating oils should not be used in hydroelectric turbine

applications, such as bearing oil, runner hub oil, or governor oil, until extensive tests are performed. It is recommended that the Corps of Engineers Hydroelectric Design Center be consulted before the initial purchase of any EA fluids and greases for hydropower applications.

d. Accelerated fluid degradation at high temperature, change of performance characteristics at low temperature, and possible new filtration requirements should be investigated carefully. The oxidation rate of vegetable-based EA lubricants increases markedly above 179.6 °F (82 °C), and lengthy exposure at the low temperature can cause some products to gel. Filters should be checked after 50 hours of operation, as vegetable oil tends to remove mineral oil deposits from the system and carry them to the filters.

e. On a hydraulic power system, when changing over to EA lubricants, the system should be thoroughly drained of the mineral oil and, if possible, flushed. Flushing is mandatory if diesel engine oil was the previous hydraulic fluid. This will avoid compromising the biodegradability and low toxicity of the EA fluids. Disposal of the used fluids should be in accordance with applicable environmental regulations and procedures. More frequent filter changes may be necessary. Moisture scavengers may be necessary on breather intakes to keep water content in the lubricant low. Temperature controls for both upper and lower extremes may need to be added to the system. Redesign of hydraulic systems to include larger reservoirs may be necessary to deal with foaming problems. The use of stainless steel components to protect against corrosion may be necessary. To maximize the life of a biodegradable hydraulic oil in service, the following characteristics should be monitored regularly, with warning limits:

- Viscosity: +10%.
- Oxidation (TAN): +2mg KOH/g.
- Water content: >500ppm.

f. The number of manufacturers who produce EA hydraulic fluids, lubricating oils, and greases continues to expand. Names of the manufacturers include some well known companies that have marketed lubricants for many years as well as a large number of smaller companies that appear to specialize in EA products. Some of these companies also market specialty EA products such as gear oils, wire rope lubricants, air tool lubricants, and cutting and tapping fluids. EA turbine oils exist; however, to date, none of the oil suppliers has recommended these products for hydroelectric power plants. It is important for the end users to use due diligence when considering an EA fluid. This includes understanding the Federal, state, local, and tribal laws and regulations. Other considerations include:

- Understand the basics behind EA fluids, standards, and classifications.
- Ask questions of the system manufacturer and the fluid supplies.
- Talk to suppliers of the different types of fluids (SE, PAG, PAO, vegetable oils) to determine if that fluid is right for the intended application (more than one type of fluid may work).
- Require the fluid supplier to provide documentation from independent laboratories/testing companies.
- Consider the overall and lifecycle costs (including potential savings from fines).

- Ensure the fluid supplier is a reputable company.
- Most importantly, obtain the approval from the system manufacturer for the use of the EA lubricant.

13-10. Selecting an Environmentally Acceptable Fluid. Selecting an EA hydraulic fluid to replace a fluid, or to commission a new system, is not a task that should be taken lightly. There is a wealth of information and misinformation available on EA fluids. The EA fluid industry is growing, and as such, there many choices when it comes to a new EA fluids. Some of the products available are truly "environmentally acceptable," while other products only make those claims. Below is a summary of important considerations when evaluating an EA fluid:

a. System Requirements and Compatibility. Consult with the system manufacturer to determine all of the physical characteristics/parameters the fluid for that system shall require and if the proposed fluid is acceptable. Other considerations include:

- Consult with the system manufacturer and fluid provider to ensure the operating environment is suitable for the fluid.
- Consult with the system manufacturer to determine if ALL of the seals in the system are compatible with the proposed fluid.
- If the system is still under warranty, ensure the new fluid will not void the remaining warranty.
- Examine the tank/reservoir coating system and determine if the fluid is compatible.
- Obtain written approval from the system manufacturer indicating that the proposed fluid is compatible with the system, reservoir, and seals, and that the physical and performance properties are within the requirements system.
- Coordinate with the system manufacturer and the fluid provider on the proper flushing procedures.
- If commissioning a new system, require the system manufacturer to factory/bench test the system with the proposed EA fluid. The manufacturer should provide a full test report including oil analysis both before and after testing.

b. Environmental Properties. All testing regarding environmental properties should be performed by independent laboratories/testing companies. Documentation should be provided for all required tests. This includes tests for biodegradability, toxicity, and sheen generation. Provide a list of the chemical compounds in the fluid and ensure that no heavy metals are present.

c. Costs and Maintenance Considerations. One particular area of concern for manufacturers and end users is fluid lifetime. A significant question is whether the EA lubricant last as long as conventional mineral oils. In some cases, high performance EA lubricants can actually offer the benefit of longer life. The cost of EA fluids currently range from 1.5 to 4 times that of a regular grade petroleum-based hydraulic fluid. This is similar for other types of EA lubricants. Costs can vary from fluid manufacturer and volume required. Despite the higher initial costs for EA hydraulic fluids compared to petroleum-based fluids, there can be significant savings in cleanup costs, when compared to cleanup costs for petroleum-based hydraulic fluids.

In some instances, if an accidental discharge occurs, the fines may be reduced or eliminated if the issuing agency is aware (or is made aware) that the fluid is EA and the impact on the environment is minimal. In addition, some EA hydraulic fluids have a longer life expectancy than a traditional mineral oil, and therefore the lifecycle costs over time may be reduced. To reduce costs, users should:

- Obtain a quote(s) from the suppliers.
- Determine if additional fluid is necessary for proper system flushing and ensure that fluid cost is included.
- Consult with the suppliers on the life expectancy of the fluid and recommended intervals between fluid changes, filter changes, dryer/breather changes, etc.
- Develop a lifecycle cost analysis to compare the fluid(s) to the conventional fluid over a fix period of time.
- Include periodically scheduled fluid analysis as part of the maintenance program.

13-11. Sheen Generation. The sheen generating properties of hydraulic fluid and other lubricating oils and how they relate to the environment is a hotly debated topic. Some argue that oil sheens on the surface of the water allow for faster detection of a spill/leak/problem and help determine the source and severity of the oil spill. Also, the oil sheen has the potential to be contained with booms and recovered, whereas non-sheening water soluble oils may directly enter the water column after which they cannot be recovered. Others argue that a non-sheen oil may not remain on the surface of the water where it has the potential to coat the feathers of fowl or a mammal coming to the surface for air, which can hinder their ability to breathe and survive. Additionally, there are applications where, due to the nature of the service (i.e., stern tube, submerged bearing, etc.), the oil-to-sea interface will only seep small/limited amounts of oil. In these instances, a non-sheening environmentally acceptable fluid may be desirable.

a. Regardless of the arguments for or against sheen generation, the end user must be aware of the Federal regulations relating to oil discharge. The CWA and the Oil Pollution Act of 1990 (OPA 90) prohibits the discharge of oil into the waters of the United States in quantities that may be harmful. Alsp, 40 CFR Part 110.3(b) defines “quantities that may be harmful” as those causing a film or sheen on or discoloration of the surface of the water or adjoining shorelines or cause a sludge or emulsion to be deposited beneath the surface of the water or on adjoining shorelines. The current USEPA VGP allows for discharges of lubricants from normal operations in amounts that are not harmful (per 40 CFR Part 110). In addition to the Federal statutes, the discharge of oil must also be in accordance with appropriate state, local, and/or tribal governments.

b. As the regulations read above, any oil discharge or spill that results in a sheen must be reported to the appropriate authorities. If the discharge or spill does not create a sheen, it still is reportable if it created sludge or emulsion below the water. Operators and supervisors must be aware of the regulations and the requirements to report any discharge of oil in quantities that may be harmful.

c. Although employing a “non-sheening” EA hydraulic fluid or lubricating oil may be desirable over a sheening type, this factor should not be considered in the determination of the fluid’s EA classification. It is the responsibility of the floating plant and facility operators to evaluate their operations and determine the desirable sheen characteristics. Considerations may include the location of the equipment, open or closed systems, expected operational seepage, spill potential, the level of monitoring on the system, the operating area, and other environmental factors. If a non-sheen EA hydraulic fluid is required by the operators, it shall meet sheen requirements as defined by the “Static Sheen Test.” Sheen test requirements are defined in 40 CFR 435, Subpart A, Appendix 1, Part 1, Scope and Application, which states:

> This method is to be used as a compliance test for the “no discharge of free oil” requirement for discharges of drilling fluids, drill cuttings, produced sand, and well treatment, completion and workover fluids. “Free oil” refers to any oil contained in a waste stream that when discharged will cause a film or sheen on a discoloration of the surface of the receiving water.

d. Sheen Generation shall pass the USEPA Static Sheen Test as described in 40 CFR 435, Subpart A, Appendix 1. Appendix 1, Part 8.6, of the referenced CFR provides requirements regarding sheen detection and growth. These requirements are:

(1) Detection of “free oil”

> Detection of a “silvery” or “metallic” sheen or gloss, increased reflectivity, visual color, iridescence, or an oil slick on the water surface of the test container surface shall constitute a demonstration of “free oil” …

(2) Sheen growth

> If an oil sheen or slick occurs on less than one-half of the surface area after the sample is introduced to the test container, observations will continue for up to 1 hour. If the sheen or slick increases in size and covers greater than one-half of the surface area of the test container during the observation period, the discharge of the material shall cease. If the sheen or slick does not increase in size to cover greater than one-half of the test container surface area after 1 hour of observation, discharge may continue and additional sampling is not required.
>
> If a sheen or slick occurs on greater than one-half of the surface area of the test container after the test material is introduced, discharge of the tested material shall cease. The permittee may retest the material causing the sheen or slick. If subsequent tests do not result in a sheen or slick covering greater than one-half of the surface area of the test container, discharge may continue.

13-12. Transformer Oils.

a. Transformer oils are used as a dielectric lubricant in transformers. A transformer oil is not only an insulator, but is also a coolant. Therefore, to successfully use EA fluids in large transformers such as that shown in Figure 13-2, care must be taken to ensure that the thermal properties of these dielectrics are not different enough to affect the operation of the transformer. EA fluids for transformers include natural esters and vegetable oil. For the past few years, the

U.S. Department of the Interior has tested the effectiveness of electrical transformers that use vegetable oil instead of mineral oil to boost power production while lowering the threat of fires and toxic spills. Transformers need the oil as an insulating and cooling agent. Polychlorinated biphenyls (PCBs) were once used extensively for transformer lubrication. However, PCBs are highly toxic. Petroleum-based mineral oil replaced PCBs, but that also poses a risk for installations on waterways. One manufacturer of dielectric transformer fluid (Cargill) makes the fluid out of soybeans. Other companies make it from sunflower seeds and other vegetables. However, whatever the base material, vegetable oil fluids do not catch fire or overheat the way mineral oil does, and they biodegrade naturally within weeks if spilled, something that petroleum-based mineral oil does not do.

b. Vegetable oil-filled transformers currently make up only about 10% of the transformers on the U.S. market. However, that number is expected to grow substantially in the future. The current number of transformers in the United States that use vegetable oil fluid is over half a million. They range from the small transformers on power poles to massive transformers at power plants. With vegetable oil insulation, lightning strikes to transformers may no longer lead to fires. Spills will be less toxic. Vegetable-based oil transformers can also run at higher temperatures than mineral oil-based transformers. This may help prevent summertime brownouts in the summer. Studies show that vegetable oils catch fire at roughly 680 °F (360 °C) while mineral oil catches fire at roughly 335 °F (168 °C). The use of vegetable-based oil-filled transformers should be evaluated for all new transformer installations at USACE facilities on waterways.

Figure 13-2. Transformer at a Power Plant.

CHAPTER 14

Gear Lubrication

14-1. General. Open gears and gear reducers (also referred to as gearboxes and speed reducers) are used extensively on USACE navigation structures. Lubricants are integral to gears and gear reducers and are subject to some unique challenges on navigation structures. This includes extreme temperatures, infrequency of use, high humidity, submersion during floods, and high operating loads and pressures. Open gears and gear reducers are typically custom made and any failure could result in a shutdown of the lock and dam. Lubrication issues are interrelated with open gearing and gear reducer issues. A discussion of lubrication may cross over into gearing and is sometimes the cause of gear failures. The selection of lubricant is important to the long term efficient operation of the gear drive. In addition to considering these factors, the gear lubricant selected for a particular application should match the recommendations of the original equipment manufacturer (OEM). Generally, open gear drives are the most economical type of gear drive alternative for use in applications where high load-carrying capacity and long service life under severe shock load conditions are required. It is these characteristics, in addition to flexibility in the machine's design, that have made the open gear drive a common type of drive used at USACE navigation structures.

a. Energy is transmitted from a power source to a terminal point, through gears that change speeds, directions, and torque. In most cases, this is done through a combination of sliding and rolling motion between gear teeth. Although, for worm gears, the load is transmitted entirely through sliding motion. During the rolling motion, gears are considered to operate in a elastohydrodynamic mode, and during the sliding motion, boundary and/or hydrodynamic lubrication takes place. Gear lubricants are formulated for each application and applied to prevent premature component failure, assure reliable operation, reduce operating cost, and increase service life. The important objectives accomplished by these lubricants include: reduction of friction and wear, corrosion prevention, reduction of operating noise, improvement in heat transfer, and removal of foreign or wear particles from the critical contact areas of the gear tooth surfaces.

b. Gears vary greatly in their design and in their lubrication requirements. Proper lubrication is important to prevent premature wear of gear tooth surfaces. When selecting a lubricant for any gear application, the following issues must be considered: type and materials of gear; operating conditions, including rolling or sliding speed; type of steady load and temperature; method of lubricant application; environment; and type of service. Enclosed gears – those encased in an oiltight housing – usually require an oil with various additives, depending on the operating conditions. Rust, oxidation, and foam inhibitors are common. EP additives are also used when loads are severe.

c. Worm gears are special because the action between the worm and the mating bull gear is sliding rather than the rolling action common in most gears. The sliding action allows fluid film lubrication to take place. Worm gear reducers typically require oil that is approximately twice as heavy as that required for parallel shaft gear reducers. This is due to the nature of the sliding action between the worm gear and the worm wheel. Another significant difference is that worm gears are usually made of dissimilar materials, which reduces the chance of galling and reduces

friction. EP additives usually are not required for worm gears and may actually be detrimental to a bronze worm gear because they can cause corrosion. Lubrication can be improved by oiliness additives.

d. In open gear applications, the lubricant must resist being thrown off by centrifugal force or being scraped off by the action of the gear teeth. A highly adhesive lubricant is required for most open gear applications. Most open gear lubricants are heavy oils, asphalt-based compounds, or soft greases. Depending on the service conditions, oxidation inhibitors or EP additives may be added. Caution must be exercised when using adhesive lubricants because they may attract and retain dust and dirt, which can act as abrasives. To minimize damage, gears should be periodically cleaned. Open gear lubricants must possess the following characteristics and properties:

- Tackiness (adhesive/cohesive properties) to impart excellent adhesion to the gears.
- Resistance to water washout and sprayoff.
- Load-carrying capability to protect against friction and wear.
- Protection of the gears against wear and corrosion.
- Cushioning ability (vibration reduction).
- Sprayability and/or ease of dispensability.
- Alleviation of housekeeping and maintenance problems.
- Resistance to fling off.
- No buildup in the roots of the gear teeth.

14-2. Gear Types.

a. Gears are discussed in more detail in EM 1110-2-2610, *Mechanical and Electrical Design of Navigation Locks and Dams* (30 June 2013). Open gears on navigation structures generally are very slow moving and carry large loads and will typically operate in the boundary lubrication regime. Some of the more common open gear types are shown below. These gears tend to be very large and are prone to contamination from dirt and debris. Any lubricant selection for open gears needs to be able to perform under adverse conditions, including submersion. Open gear lubrication has traditionally been petroleum-based lithium-based grease. Gear failures can be traced to mechanical problems or lubricant failure. Lubricant-related failures are usually traced to contamination, oil film collapse, additive depletion, and use of improper lubricant for the application. Water contamination can cause rust on working surfaces and eventually destroy metal integrity. The types of failures are discussed further in Paragraph 14-3.

b. Gear reducers (also called gearboxes or speed reducers) are a common form of power transmission used on a variety mechanical drives. Some more common types of gear reducers include parallel shaft with helical gearing and worm gear reducers. Gear reducers simply are a combination of open gears that are enclosed in a sealed box or housing. They are generally used for speed reduction. Gear reducers can use a number of gear types including worm gears, spur gears, bevel gears, and helical gears. A lubricant is used to control friction and wear between the

mating surfaces, and in enclosed gear drive applications, to transfer heat away from the contact area. It also serves as a medium to carry the additives that may be required for special functions. As the oil in a gear reducer heats and cools, it expands and contracts, allowing moist outside air into the gear reducer through the breather. To limit the entrance of moisture into gear reducers, the use of an appropriately sized oil bath or disposable desiccant breather is necessary. Some of the more common gear reducers are shown below. In general, gear lubricants (oils) are formulated to comply with AGMA 9005-E02, "Industrial Gear Lubrication Standard." Gear lubricants complying with AGMA 9005-E02 are also suitable for drive unit bearings in contact with the gear lubricant. Means of lubricating gear boxes include splash lubrication, pressure lubrication, gravity drip, spray systems, and idler immersion systems. Splash lubrication is probably most common at USACE sites.

c. Spur Gears. Spur gears (Figures 14-1 and 14-2), the most common type of gears used, are used at many USACE navigation sites. Design of spur gears is discussed in more detail in EM 1110-2-2610, *Mechanical and Electrical Design of Navigation Locks and Dams* (30 June 2013). Tooth contact is primarily rolling, with sliding occurring during engagement and disengagement. Some noise is normal, but it may become objectionable at high speeds.

d. Rack and Pinion. Rack and pinion gears are essentially a variation of spur gears and have similar lubrication requirements (Figure 14-3).

Figure 14-1. Spur Gears.

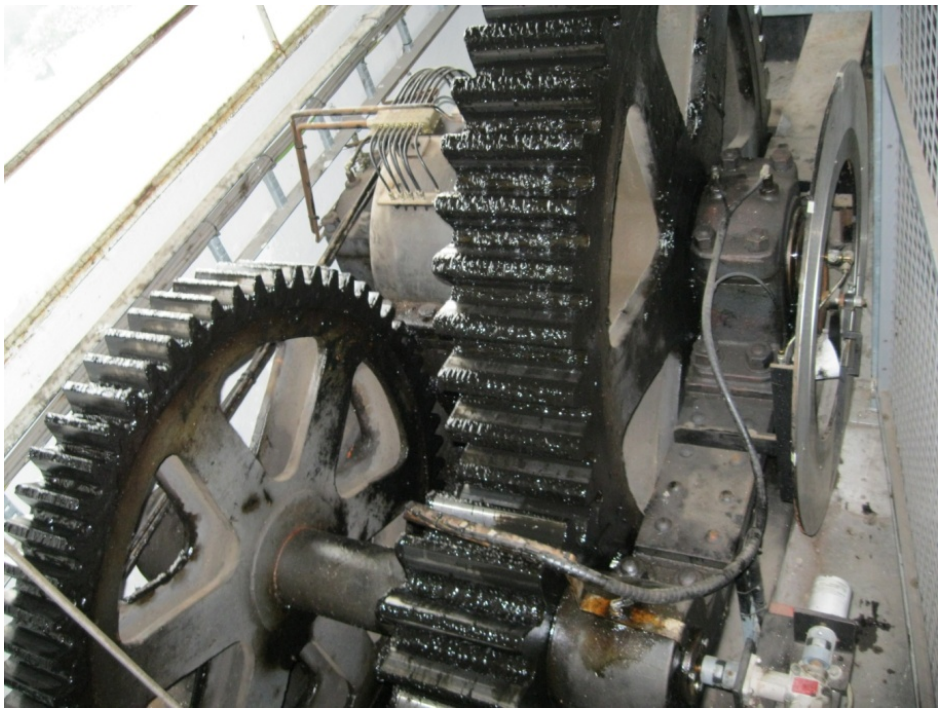

Figure 14-2. Spur Gears, Side View.

Figure 14-3. Sector Gear and Rack (Rack and Pinion).

a. Helical. Helical gears (Figure 14-4) operate with less noise and vibration than spur gears. At any time, the load on helical gears is distributed over several teeth, resulting in reduced wear. Due to their angular cut, teeth meshing results in thrust loads along the gear shaft. This action requires thrust bearings to absorb the thrust load and maintain gear alignment.

Figure 14-4. Helical Gears.

b. Herringbone. Herringbone gears (Figure 14-5) are essentially two side-by-side opposite-hand helical gears. This design eliminates thrust loads, but alignment is very critical to ensure correct teeth engagement.

Figure 14-5. Herringbone Gears.

c. Bevel. Bevel gears (Figure 14-6) are used to transmit motion between shafts with intersecting center lines. The intersecting angle is normally 90 degrees, but may be as high as 180 degrees. When the mating gears are equal in size and the shafts are positioned at 90 degrees to each other, they are referred to as miter gears. The teeth of bevel gears can also be cut in a curved manner to produce spiral bevel gears, which produce smoother and quieter operation than straight cut bevels.

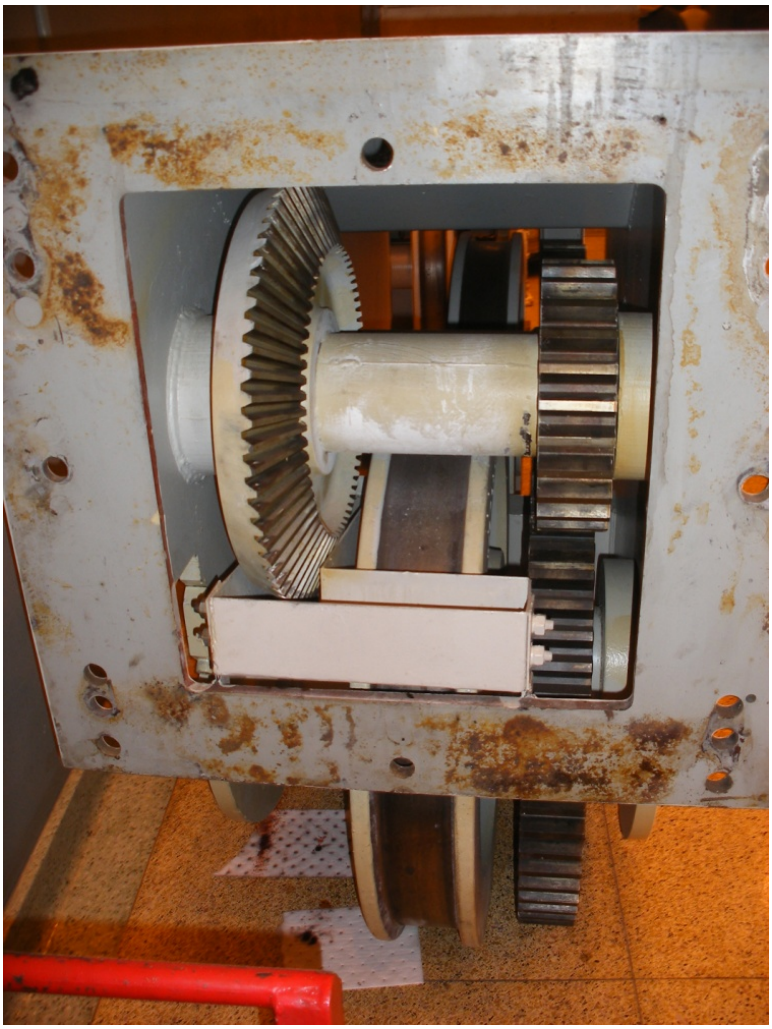

Figure 14-6. Example of Bevel Gear (on Left).

d. Worm. Operation of worm gears is analogous to a screw. The relative motion between these gears is sliding rather than rolling (Figure 14-7). The uniform distribution of tooth pressures on these gears enables use of metals with inherently low coefficients of friction such as bronze wheel gears with hardened steel worm gears. These gears rely on full fluid film lubrication and require heavy oil compounded to enhance lubricity and film strength to prevent metal contact.

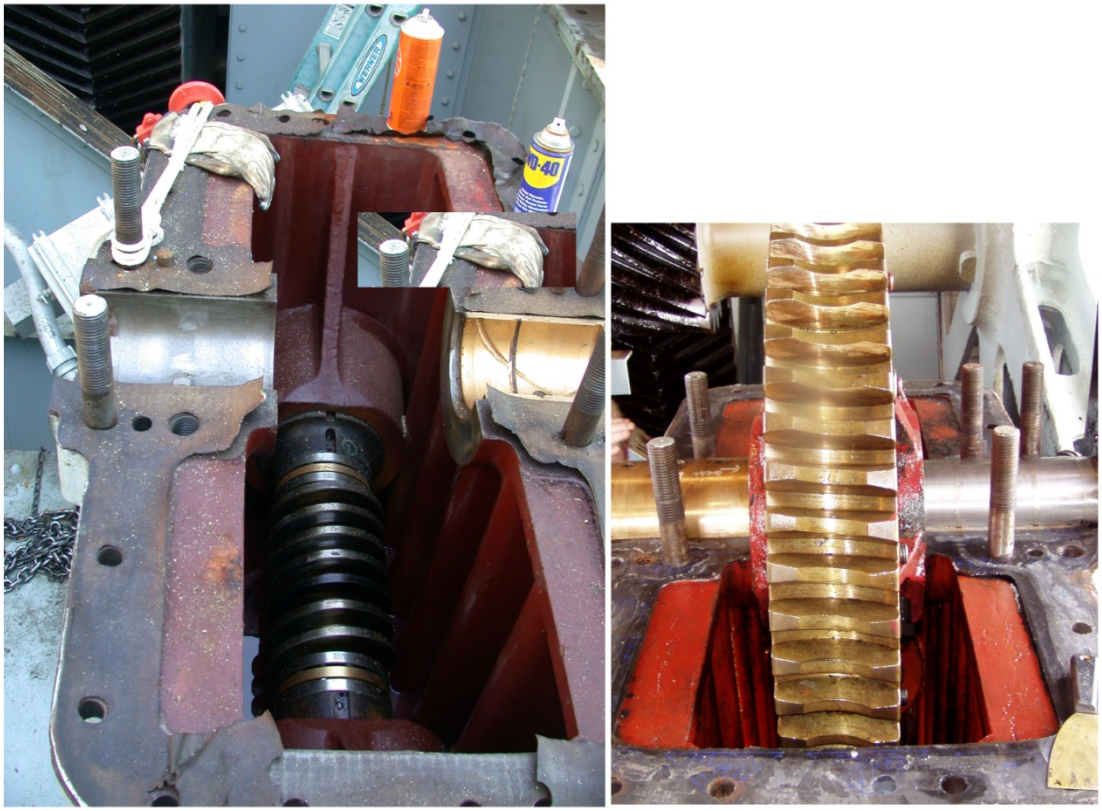

Figure 14-7. Worm Gear Reducer with Worm Wheel Removed (Left) and in Place (Right).

e. Hypoid. Hypoid gears are similar to spiral bevel gears except that the shaft center lines do not intersect. Hypoid gears combine the rolling action and high tooth pressure of spiral bevels with the sliding action of worm gears. This combination and the all-steel construction of the drive and driven gear result in a gear set with special lubrication requirements, including oiliness and antiweld additives to withstand the high tooth pressures and high rubbing speeds.

f. Annular. Annular gears have the same tooth design as spur and helical gears, but unlike these gears, the annular gear has an internal configuration. The tooth action and lubrication requirements for annular gears are similar to spur and helical gears.

14-3. Gear Wear and Failure.

a. The most critical function provided by lubricants is to minimize friction and wear to extend equipment service life. Gear failures can be traced to mechanical problems or lubricant failure. Lubricant-related failures are usually traced to contamination, oil film collapse, additive depletion, and use of improper lubricant for the application. The most common failures are due to particle contamination of the lubricant. Dust particles are highly abrasive and can penetrate through the oil film, causing “ploughing” wear or ridging on metal surfaces. Water contamination can cause rust on working surfaces and eventually destroy metal integrity. To prevent premature failure, gear selection requires careful consideration of the following: gear tooth geometry, tooth action, tooth pressures, construction materials and surface characteristics, lubricant characteristics, and operating environment. The first four items are related to design

and application, and further discussion is beyond the scope of this manual. These items may be mentioned where necessary, but discussions are limited to those aspects directly related to and affected by lubrication, including wear, scuffing, and contact fatigue. Refer to ANSI/AGMA Standard 1010-E95, and ASM Handbook Volume 18, for photographs illustrating the wear modes described in the following discussion.

b. Normal Wear. Normal wear occurs in new gears during the initial running-in period. The rolling and sliding action of the mating teeth create mild wear that appears as a smooth and polished surface.

c. Fatigue. Pitting occurs when fatigue cracks are initiated on the tooth surface or just below the surface. Usually pits are the result of surface cracks caused by metal-to-metal contact of asperities or defects due to low lubricant film thickness. High speed gears with smooth surfaces and good film thickness may experience pitting due to subsurface cracks. These cracks may start at inclusions in the gear materials, which act as stress concentrators and propagate below and parallel to the tooth surface. Pits are formed when these cracks break through the tooth surface and cause material separation. When several pits join, a larger pit (or spall) is formed. Another suspected cause of pitting is hydrogen embrittlement of metal due to water contamination of the lubricant. Pitting can also be caused by foreign particle contamination of lubricant. These particles create surface stress concentration points that reduce lubricant film thickness and promote pitting. The following guidelines should be observed to minimize the onset of pitting in gear units:

- Reduce contact stresses through load reduction or by optimizing gear geometry.
- Ensure that steel is properly heat treated to high hardness. Carburizing is preferable.
- Ensure that gear teeth have smooth surfaces produced by grinding or honing.
- Use proper quantities of cool, clean, and dry lubricant with the required viscosity.

d. Micropitting. Micropitting occurs on surface-hardened gears and is characterized by extremely small pits approximately 10 µm (400 µ-inches) deep. Micropitted metal has a frosted or a gray appearance. This condition generally appears on rough surfaces and is exacerbated by use of low viscosity lubricants. Slow speed gears are also prone to micropitting due to thin lubricant films. Micropitting may be sporadic and may stop when good lubrication conditions are restored following run-in. Properly maintaining an adequate lubricant film thickness is the most important factor influencing the formation of micropitting. Higher speed operation and smooth gear tooth surfaces also hinder formation of micropitting. The following guidelines should be observed to reduce the onset of micropitting in gear units:

- Use gears with smooth tooth surfaces produced by careful grinding or honing.
- Use the correct amount of cool, clean, and dry lubricant with the highest viscosity permissible for the application.
- Use high speeds, if possible.
- Use carburized steel with proper carbon content in the surface layers.

e. Wear. The amount of wear that is acceptable depends on the expected life, noise, and vibration of the gear units. Excessive wear is characterized by loss of tooth profile, which results in high loading and loss of tooth thickness, which may cause bending fatigue. New gears contain surface imperfections or roughnesses that are inherent to the manufacturing process. During the initial run-in period, these imperfections are reduced through wear. Smoothing of the gear surfaces is to be expected. Mild wear will occur even when adequate lubrication is provided, but this wear is limited to the oxide layer of the gear teeth. Mild wear is beneficial because it increases the contact areas and equalizes the load pressures on gear tooth surfaces. Furthermore, the smooth gear surfaces increase the film thickness and improve lubrication.

(1) The amount of wear that is acceptable depends on the expected life, noise, and vibration of the gear units. Excessive wear is characterized by loss of tooth profile, which results in high loading and loss of tooth thickness, which may cause bending fatigue.

(2) Wear cannot be completely eliminated. Speed, lubricant viscosity, and temperature impose practical limits on gear operating conditions. Gears that are highly loaded, operate at slow speeds, i.e., less than 100 ft/min (30 m/min), and rely on boundary lubrication are particularly subject to excessive wear. Slow speed adhesive wear is highly dependent on lubricant viscosity. Higher lubricant viscosities provide significant wear reduction, but viscosities must be carefully selected to prevent overheating.

(3) The following guidelines should be observed to minimize the onset of adhesive wear in gear units:

- Ensure that gear teeth have smooth surfaces.
- If possible, restrict the run-in period for new gear units to one-half load for the first hours of operation.
- Use the highest speeds possible. High load, slow speed gears generally operate in the boundary lubrication region and are especially prone to excessive wear. For these applications, nitrided gears should be specified and EP additives used for the lubricant.
- Avoid using lubricants with sulfur-phosphorus additives for very slow speed gears (less10 ft/min [than 3 m/min]).
- Use the required quantity of cool, clean, and dry lubricant at the highest viscosity permissible.

f. Abrasion. Abrasive wear is caused by particle contaminants in the lubricant. Particles may originate internally due to poor quality control during the manufacturing process. Particles also may be introduced from the outside during servicing or through inadequate filters, breathers, or seals. Internally generated particles are particularly destructive because they may become work-hardened during compression between the gear teeth. The following guidelines should be observed to prevent abrasive wear in gear units:

- Remove internal contamination from new gearboxes. Drain and flush the lubricant before initial startup and again after 50 hours of operation. Refill with the manufacturer’s recommended lubricant. Install new filters or breathers.

- Use surface-hardened gear teeth, smooth tooth surfaces, and high viscosity lubricants.
- Maintain oiltight seals and use filtered breather vents, preferably located in clean, nonpressurized areas.
- Use good housekeeping procedures.
- Use fine filtration for circulating oil systems. Filtration to 3 µm (120 µ-in.) has proven effective in prolonging gear life.
- Unless otherwise recommended by the gear manufacturer, change the lubricant in oil bath systems at least every 2500 hours or every 6 months.
- When warranted by the nature of the application, conduct laboratory analysis of lubricants. Analysis may include spectrographic, ferrographic, acid number, viscosity, and water content.

g. Polishing. Polishing wear is characterized by a mirror-like finish of the gear teeth. Polishing is caused by antiscuff additives that are too chemically reactive. An excessive reaction rate, coupled with continuous removal of surface films by very fine abrasive particles in the lubricant, may result in excessive polishing wear. The following guidelines should be observed to prevent polishing wear in gearsets:

- Use less chemically active antiscuff additives such as borate.
- Remove abrasives from the lubricant by using fine filtration or by frequent oil changes.

h. Scuffing. The terms scuffing and scoring are frequently interchanged. The following definitions are provided to assist in correctly ascertaining the type of damage observed. The ASM Handbook Volume 18 defines scuffing as localized damage caused by the occurrence of solid-phase welding between sliding surfaces. It defines scoring as the formation of severe scratches in the direction of sliding. The handbook also stipulates that scoring may be caused by local solid-phase welding or abrasion, but suggests that minor scoring be considered as scratching. Gear scuffing is characterized by material transfer between sliding tooth surfaces. Generally this condition occurs when inadequate lubrication film thickness permits metal-to-metal contact between gear teeth. Without lubrication, direct metal contact removes the protective oxide layer on the gear metal, and the excessive heat generated by friction welds the surfaces at the contact points. As the gears separate, metal is torn and transferred between the teeth. Scuffing is most likely to occur in new gear sets during the running-in period because the gear teeth have not sufficient operating time to develop smooth surfaces.

i. Critical Scuffing Temperature. Research has shown that, for a given mineral oil without antiscuffing or extreme pressure additives, there is a critical scuffing temperature that is constant regardless of operating conditions. Evidence indicates that, beyond the critical temperature, scuffing will occur. Therefore, the critical temperature concept provides a useful method for predicting the onset of scuffing. The critical scuffing temperature is a function of the gear bulk temperature and the flash temperature and is expressed as:

$$T_c = T_b + T_f \tag{14-1}$$

Where the bulk temperature Tb is the equilibrium temperature of the gears before meshing and the flash temperature Tf is the instantaneous temperature rise caused by the local frictional heat at the gear teeth meshing point. The critical scuffing temperature for mineral oils without antiscuffing or extreme pressure additives increases directly with viscosity and varies from 300 to 570 °F (150 to 300 °C). However, this increased scuffing resistance appears to be directly attributed to differences in chemical composition and only indirectly to the beneficial effects of increased film thickness associated with higher viscosity. Examination of the critical temperature equation indicates that scuffing can be controlled by lowering either of the two contributing factors. The bulk temperature can be controlled by selecting gear geometry and design for the intended application. The flash temperature can be controlled indirectly by gear tooth smoothness and through lubricant viscosity. Smooth gear tooth surfaces produce less friction and heat while increased viscosity provides greater film thickness, which also reduces frictional heat and results in a lower flash temperature. Furthermore, judicious application of lubricant can cool the gears by removing heat.

(1) For synthetics and lubricants containing antiscuff additives, the critical temperature depends on the operating conditions and must be determined experimentally for each case. Antiscuff additives commonly used are iron sulfide and iron phosphate. These additives react chemically with the protected metal gear surface to form very strong solid films that prevent metal contact under extreme pressure and temperature conditions. As previously noted in the discussions of oil additives, the beneficial effects of extreme pressure additives are enhanced as the temperature increases.

(2) The following guidelines should be observed to prevent scuffing in gear units:

- Specify smooth tooth surfaces produced by careful grinding or honing.
- Protect gear teeth during the running-in period by coating them with iron-manganese phosphate or plating them with copper or silver. During the first 10 hours of run-in, new gears should be operated at one-half load.
- Use high viscosity lubricants with antiscuff additives such as sulfur, phosphorus, or borate.
- Make sure the gear teeth are cooled by supplying adequate amount of cool lubricant. For circulating oil systems, use a heat exchanger to cool the lubricant.
- Optimize the gear tooth geometry. Use small teeth, addendum modification, and profile modification.
- Use accurate gear teeth, rigid gear mountings, and good helix alignment.
- Use nitrided steels for maximum scuffing resistance. Do not use stainless steel or aluminum for gears if there is a risk of scuffing.

14-4. Gear Lubrication. The most important property for an oil used to lubricate enclosed gears or gearboxes is correct viscosity. The major variable in viscosity selection is the speed of the gears expressed in pitch line velocity, which is defined as speed of the gear in rpm times the circular pitch diameter in inches. The AGMA publishes viscosity recommendations based on pitch line velocity. AGMA 9005, Appendix B provides charts on viscosity versus pitchline velocity. Gear oils should be selected for the highest viscosity consistent with the operating

conditions. When very low ambient temperatures are encountered, the oil viscosity should not be lowered. A reduced oil viscosity may be too low when the gears reach their normal operating temperature. If possible, oil heaters should be used to warm the oil in cold environments. The heater should be carefully sized to prevent hot spots that may scorch the oil. Another alternative is to switch to a synthetic oil that is compatible with the gear materials. The following characteristics are applicable to all gear lubricants. The lubrication requirements for specific gears follow this general discussion.

a. Viscosity. Good viscosity is essential to ensure cushioning and quiet operation. An oil viscosity that is too high will result in excess friction and degradation of oil properties associated with high oil operating temperature. In cold climates, gear lubricants should flow easily at low temperature. Gear oils should have a minimum pour point of 9 °F (5 °C) lower than the lowest expected temperature. The pour point for mineral gear oil is typically 20 °F (–7 °C). When lower pour points are required, synthetic gear oils with pour points of –40 °F (–40 °C) may be necessary. The following equation from the ASM Handbook provides a method for verifying the required viscosity for a specific gear based on the operating velocity:

Where:

v = pitch line velocity (ft/min) given by:

$$V=0.262nd \tag{14-2}$$

where n is the pinion speed in rev/min and d is the pitch diameter (inches).

b. Film strength. Good film strength helps prevent metal contact and scoring between the gear teeth.

c. Lubricity (Oiliness). Lubricity is necessary to reduce friction.

d. Adhesion. Helps prevent loss of lubrication due to throw-off associated with gravity or centrifugal force especially at high speeds.

e. Gear speed. The now superseded Industrial Gear Lubrication Standards, AGMA 250.04, used center distance as the primary criterion for gear lubricant selection. The new version of this standard, designated AGMA 9005-E02, *Industrial Gear Lubrication*, has adopted pitch line velocity as the primary selection criterion. As noted above, gear speed is a factor in the selection of proper oil viscosity. The pitch line velocity determines the contact time between gear teeth. High velocities are generally associated with light loads and very short contact times. For these applications, low viscosity oils are usually adequate. In contrast, low speeds are associated with high loads and long contact times. These conditions require higher viscosity oils. EP additives may be required if the loads are very high.

f. Temperature. Ambient and operating temperatures also determine the selection of gear lubricants. Normal gear oil operating temperature ranges from 90 to 100 °F (50 to 55 °C) above ambient. Oils operating at high temperature require good viscosity and high resistance to oxidation and foaming. Caution should be exercised whenever abnormally high temperatures are experienced. High operating temperatures are indicative of oils that are too viscous for the

application, excess oil in the housing, or an overloaded condition. All of these conditions should be investigated to determine the cause and to then correct the condition. Oil for gears operating at low ambient temperatures must be able to flow easily and provide adequate viscosity. Therefore, these gear oils must possess high viscosity indices and low pour points.

g. Open Gears. In addition to the general requirements, lubrication for open gears must meet the following requirements:

- Drip resistance. Prevents loss of lubricant, especially at high temperatures, which reduces viscosity.
- Brittle resistance. Lubricant must be capable of resisting embrittlement, especially at very low temperatures.

h. Enclosed Gears. In addition to the general requirements, lubrication for enclosed gears must meet the following requirements:

- Chemical stability and oxidation resistance. Prevents thickening and formation of varnish or sludge. This requirement is especially significant in high speed gears because the oil is subjected to high operating oil and air temperatures. Oxidation stability of the lubricant is critical for gear reducers. Lubricants with low values of oxidation stability will oxide rapidly in the presence of water at high temperatures. When oil oxidizes, it may result in sludge accumulation in the gear reducer. The sludge may interfere with the cooling and lubrication. The oxidized oil will also cause corrosion.
- Extreme pressure protection. Provides additional galling and welding protection for heavily loaded gears when the lubricant film thickness fails. Extreme pressure lubricants are available for mild and severe (hypoid) lubricant applications.

i. Types of Gear Lubricants. For oil lubrication, refer to AGMA 9005-E02 for the specifications for the following lubricants.

(1) R&O oils. These petroleum-based oils are frequently referred to as R&O gear oils. R&O oils are the most common gear lubricants and have been formulated to include chemical additives that enhance their performance qualities. R&O lubricating oils have easy application properties for gear and bearings, good lubrication qualities, and adequate cooling qualities—and they are economical to use. Disadvantages include restriction to enclosed gear applications to prevent contamination.

(2) Compounded gear lubricants. These oils are a blend of petroleum-based oils with 3 to 10% fatty or synthetic fatty oils. They are particularly useful in worm gear drives. Except as noted in the AGMA applicable specifications, compounded oils should comply with the same specifications as R&O oils.

(3) Extreme pressure lubricants. These gear lubricants, commonly referred to as EP lubricants, are petroleum-based and specially formulated to include chemical additives such as sulfur-phosphorus or other similar materials capable of producing a film that provides extreme pressure and antiscuffing protection.

(4) Synthetic oils. Synthetic oils have the advantage of stable application over wide temperature range, good oxidation stability at high temperatures, high viscosity indices, and low volatility. Because gear oils must be changed periodically, the main disadvantage of synthetics is high cost, which can only be justified for applications at high temperature extremes where other lubricants fail. Another disadvantage of synthetics is possible incompatibility with seals and other lubricants. The equipment manufacturer should be consulted before using synthetic oils to ensure that exposed materials will not be damaged or warranties voided. Gear units should be flushed of all mineral oils before the filling with the final synthetic oil.

(5) Residual compounds. These are higher viscosity straight mineral or EP lubricants that are mixed with a diluent to facilitate application. Viscosities range from 1 to 3 sq in./s at 212 °F (400 to 2000 mm^2/s at100 °C) (cST at 212 °F [100 °C]) without diluent. Once applied, the diluent evaporates and leaves a heavy residual lubricant coating on the treated surface.

j. Special Compounds and Greases. These lubricants include special greases formulated for boundary lubricating conditions such as low speed, high-load applications where high film strength is required. These lubricants usually contain base oil, a thickener, and a solid lubricant such as molybdenum disulfide (MoS_2) or graphite. The gear manufacturer should be consulted before using grease. The primary disadvantage of using grease is that it accumulates foreign particles such as metal, dirt, and other loose materials that can cause significant damage if adequate maintenance is not provided. Grease also has a tendency to be squeezed out of the gear tooth meshing zone, and it does not provide satisfactory cooling.

k. Open Gear Lubricants (Oils). Oil lubrication is generally not used within USACE for open gear applications. Open gear oil lubricants are generally reserved for slow speed and low load conditions. Slow speed gears will generally operate in the boundary lubricating regime. Due to the open configuration, the lubricants must be viscous and adhesive to resist being thrown off the gear teeth surfaces. The disadvantages of these lubricants are similar to those noted above for grease.

l. Solid Lubricants. The solid lubricants most commonly used in gear trains are molybdenum disulfide, graphite, PTFE, and tungsten disulfide (WS_2). Because they are expensive to apply, use of these lubricants is reserved for special applications such as high and low temperature extremes where other lubricants fail to perform adequately.

m. Applications. Spur, helical, and bevel gears have similar load and speed characteristics, and similar requirements for antiscuffing and viscosity.

(1) Spur and helical gears. Spur and helical gears usually require mineral oils with R&O inhibitors. Low viscosity R&O oils, such as turbine oils, are commonly used in high speed, low-load gear units. For high speed, low-load gear applications, mineral oils without antiscuff/extreme pressure agents can be used successfully provided the oil viscosity is capable of maintaining the required film thickness. However, low speed gears are usually heavily loaded so antiscuff/extreme pressure agents are necessary to ensure adequate protection.

(2) Hypoid gears. Hypoid gears combine the rolling action and high tooth pressure of spiral bevel gears with the sliding action of worm gears. These severe operating conditions result in high load, high sliding speeds, and high friction. Therefore, hypoid gears are very susceptible to scuffing.

Mineral oils for this application must have high lubricity and high concentrations of antiscuffing/extreme pressure additives.

n. Worm Gears. Worm gears operate under high sliding velocity and moderate loads. The sliding action produces friction that produces higher operating temperatures than those that occur in other gear sets. Normal operating temperature for worm gears may rise to 93 °C (200 °F) and not be a cause for concern. Lubricants for worm gears must resist the thinning due to high temperatures and the wiping effect of sliding action, and they must provide adequate cooling. Mineral oils compounded with lubricity additives are recommended. Extreme pressure additives are usually not required for worm gears. However, when EP protection is required, the additive should be selected with caution to prevent damaging the bronze worm wheel.

o. Gear Combinations. Many applications use different gears in the same gear housing. For these applications, the lubricant must be suitable for the gears with the most demanding requirements. Generally, the other gears will operate satisfactorily with such high performance lubricants.

p. Gear Shaft Bearings. Gear shaft bearings are frequently lubricated by gear oil. In most instances, this condition is acceptable. Bearings in high speed, low-load applications may operate satisfactorily with the gear oil. However, low speed, heavily loaded gears usually require a heavy oil. For these conditions, a low viscosity EP oil may provide adequate lubrication for the gears and bearings. The low viscosity oil will adequately lubricate the bearings while the EP additive will protect the gear teeth from the effects of using a low viscosity oil.

14-5. Applications.

a. General. Lubrication requirements for gear sets are prescribed by the equipment manufacturers, based on the operating characteristics and ambient conditions under which the equipment will operate. The nameplate data on the equipment will often indicate the type of lubricant required. If no lubricant is specified on the nameplate, recommendations should be obtained from the equipment manufacturer. If the manufacturer is unknown or no longer in business, a lubricant supplier should be consulted for recommendations.

b. Gear Drives. In general, gear lubricants are formulated to comply with ANSI/AGMA 9005-E02, *Industrial Gear Lubrication Standard*. Gear lubricants complying with AGMA are also suitable for drive unit bearings in contact with the gear lubricant. Table 14-1 lists common gear oils. Table 14-2 lists gear oil common viscosities. Note that the data in Table 14-2 incorporate the old AGMA system, which has been changed. New tables no longer include the AGMA number, but rather follow the new ISO viscosity classification. Many gearboxes still reflect the old system where viscosity grades were also expressed as a single digit number and the old system is still often used in designating lubrication requirements. Reference to manufacturer's data indicates that an AGMA 3 or 4 grade lubricant will cover most winter applications, and an AGMA 5 or 6 will cover most summer applications. EP oil should be used for heavily loaded low speed equipment. Unlike the old standard, the new AGMA standards no longer recommend EP oils for worm gear drives. Instead, a compounded oil such as AGMA 7 Comp or 8 Comp should be used.

Table 14-1. Common Gear Oils for Gear Reducers.

The Most Common Gear Oils for Enclosed Reducer Gearboxes

Gear Type	ISO Viscosity Range	Oil Type
Spur, Helical, Herringbone	150-320	EP PAO, PAG
Bevel, Spiral Bevel	150-320	EP PAO, PAG
Worm	460-1000	Compounded PAO PAG
Hypoid	460	EP

Table 14-2. Gear Oil Viscosity Classification System.

R&O	Compounded	Extreme Pressure (EP)	Synthetic	AGMA #
32			32 S	0
46			46 S	1
68		68 EP	68 S	2
100		100 EP	100 S	3
150		150 EP	150 S	4
220		220 EP	220 S	5
320		320 EP	320 S	6
460	460 Comp	460 EP	460 S	7
680	680 Comp	680 EP	680 S	8
1000	1000 Comp	1000 EP	1000 S	9

Source: American Gear Manufacturers Association (AGMA)

c. The AGMA standard is intended for use by gear designers and equipment manufacturers because it requires knowing the pitch line velocity of the gear set to select a lubricant. Because this information is rarely known, except by the gear manufacturer, the standard provides little assistance for equipment operators trying to select a gear lubricant. The superseded standards, AGMA 250.01 and 250.02, require that the operators know the centerline distance for the gear sets. The centerline distance can be calculated or approximated by measuring the distance between the centerline of the driver and driven gear. Although updated standards have been in use for several years, many gear unit manufacturers and lubricant producers continue to publish selection criteria based on the old standard. Therefore, equipment operators may want to save the old standard for reference until manufacturers and producers update all their publications. When the pitch line velocity is unknown or cannot be obtained in a timely manner, an educated guess may be necessary. A lubricant can be selected by referring to the old standard and subsequently verified for compliance with the latest standard.

d. Note that AGMA provides recommended gear lubricants for continuous and intermittent operation. Inspection of some gear sets in radial gate applications at Bureau of Reclamation facilities found wear that may be attributable to use of improper oil due to runoff that left the tooth surfaces dry. The intermittent lubricant recommendations are especially important for these applications where water flow regulation requires that the gates remain in a fixed position for prolonged periods. Gear lubricants formulated for continuous operation are too thin and may run off during the standing periods, resulting in inadequate lubrication and possible gear tooth damage when the gate moves to a new position.

e. Lubrication of gear drives, such as “limitorques” used to operate gates and valves, are grease-lubricated and are covered under the lubricating requirements for gates and valves in Chapter 16.

f. Corps of Engineers facilities should ensure that gear lubricants conforming to the Corps Guide Specification (CEGS) 33 45 00.00 10 are purchased and used for storm water pump gear reducer applications.

14-6. Gear Lubricant Maintenance.

a. Oil Testing. An oil sampling and testing program is recommended to analyze for contamination, viscosity, additive breakdown, and the presence of metallic wear particles. Values that fall out of acceptable ranges for any of these indicate the need for lubricant replacement. The presence of metallic wear particles also indicate the need to further inspect the gears for excessive wear.

b. Cleaning and Flushing Gearboxes. Gear reducer oil that is no longer usable as shown by testing or visual inspection must be replaced (Figure 14-8). At this time, a flushing procedure is recommended to clean the housing of solid contaminants. This flushing procedure can consist of spraying kerosene under pressure on the interior of the case to loosen all deposit. The kerosene is then thoroughly drained from the case. If the interior paint coating of the reducer is flaking and/or rust deposits have formed, a more thorough gear reducer rehabilitation is required consisting of a suitable surface preparation and repainting of the gear reducer interior.

Figure 14-8. Gear Reducer in Need of Cleaning and Flushing.

THIS PAGE INTENTIONALLY LEFT BLANK

CHAPTER 15

Bearing Lubrication

15-1. General. Proper lubrication for rolling bearings is essential for reliable operation and long life. The lubricant provides a separating film between the bearing rolling elements, raceways, and cages to prevent metal-to-metal contact. By controlling surface contact, the lubricant is able to minimize the effect of surface contact, namely undesired friction that otherwise would generate excessive heat, metal fatigue, and wear. The lubricant must also prevent corrosion and contamination damage. Rolling element bearings are composed of two races separated by a group of rollers. The shape of these rollers determines the load a particular bearing can hold as well as the lubrication requirements. Bearings can be divided into two subgroups: plain bearings and rolling-contact bearings. Both have their place within USACE and within industry. Each type has some obvious advantages and disadvantages, but there are subtle properties as well that are often ignored. Each type of bearing can be found in multiple applications, and each can be lubricated with either oil or grease. Some specialty bearings are lubricated by water, and some are lubricated by air. Lubricants used in rolling element bearings should have the following characteristics:

- Ability to maintain a stable viscosity over a broad range of temperatures.
- Good film strength that can support loads.
- Stable structure that provides for long service life.
- Noncorrosive property and compatibility with adjacent components.
- Ability to provide a barrier against contaminant and moisture, yet not leak out of the bearing.

15-2. Plain Bearings. EM 1110-2-2610, *Mechanical and Electrical Design of Navigation Locks and Dams* (30 June 2013) also provides extensive discussion on bearing design. Per EM 1110-2-2610, plain bearings, also called sleeve bearings or bushings, should be designed for a maximum normal bearing pressure of 1000 psi (68.95 bar), except for bearings operating below 5 rpm. Plain bearings are typically designed for slower speeds than rolling-contact bearings. Grease grooves should be designed and incorporated into the bearings to provide redundant grease pathways. The pathways should be capable of delivering the grease around the entire circumference of the bearing and mating surface without relying on rotation of the components. Delivery of the grease through the pin to the bearing grease grooves in lieu of delivery through the bearing housing should be the preferred method where feasible. Plain bearings consist of two surfaces, one moving in relation to the other. Plain bearings can be the journal type, where both wear surfaces are cylindrical; thrust type, where there are two planar surfaces, one rotating on the other; and various types of sliding bearings where one surface slides in relation to the other. All depend on a lubricating film to reduce friction. Unless an oil pump is provided to generate the oil film, these bearings rely on shaft motion to generate a hydrodynamic oil wedge. Some advantages of plain bearings include:

- They have very high load-carrying capabilities.
- Their resistance to shock and vibration is greater than rolling-contact bearings.

- The hydrodynamic oil film produced by plain bearings damps vibration so less noise is transmitted.
- They are less sensitive to lubricant contamination than rolling-contact bearings.

a. Types of Plain Bearings.

(1) Journal (sleeve bearings). Journal or plain bearings consist of a shaft or journal that rotates freely in a supporting metal sleeve or shell. There are no rolling elements in these bearings. These are cylindrical with oil distributing or grease distributing grooves. The inner surface can be babbitt-lined, bronze-lined, or lined with other materials generally softer than the rotating journal. On horizontal shafts on motors and pumps, oil rings carry oil from the oil reservoir up to the bearing. In the case of very slow-moving shafts, the bearings may be called bushings. Low speed pins and bushings, which are used extensively in USACE, use a form of journal bearing in which the shaft or shell generally does not make a full rotation. This is typical of tainter gate trunnion bearings (Figure 15-1). The partial rotation at low speed, before typically reversing direction, sometimes does not allow for the formation of a full fluid film; thus metal-to-metal contact does occur within the bearing. Pins and bushings continually operate in the boundary lubrication regime. These types of bearings are typically lubricated with an EP grease to aid in supporting the load. Chapter 16 provides more discussion on tainter gate trunnion bearings.

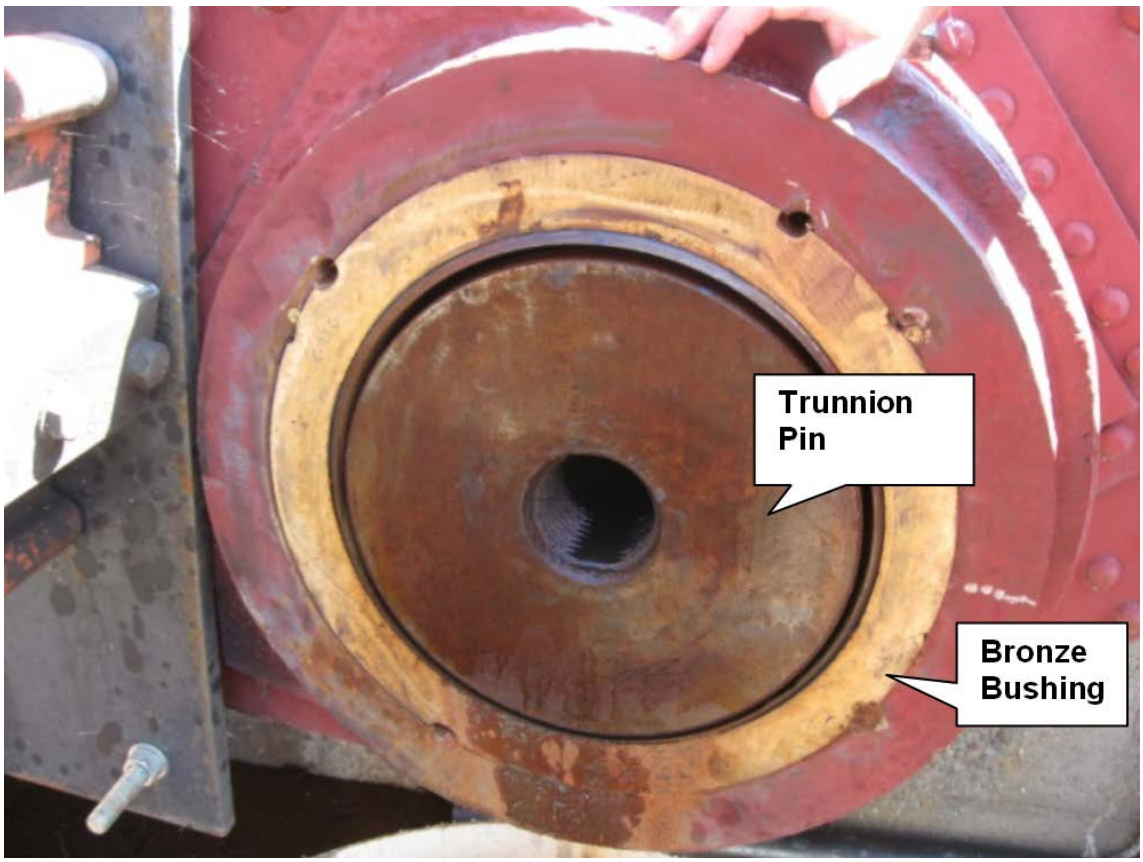

Figure 15-1. Tainter Gate Trunnion Bearing.

(2) Journal bearings (Figure 15-2) are meant to include sleeve, plain, shell, and babbitt bearings. The term “babbitt” actually refers to the layers of softer metals (lead, tin, and copper) that form the metal contact surface of the bearing shell. These softer metals overlay a stronger steel support shell and are needed to cushion the shell from the harder rotating shaft.

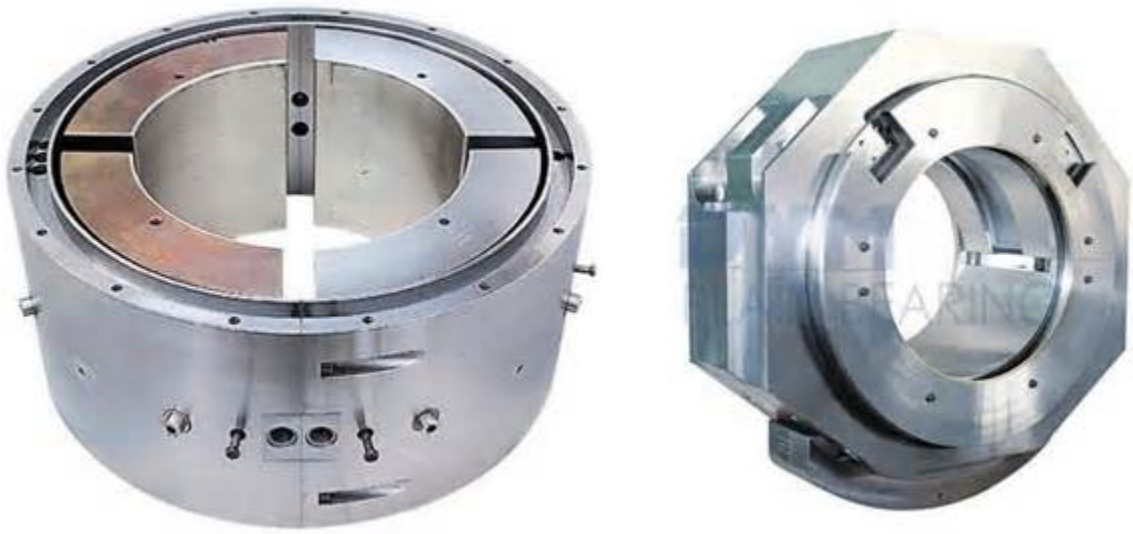

Figure 15-2. Typical Journal Bearings.

(3) The pressures encountered in the contact area of journal bearings are significantly less than those generated in rolling bearings. This is due to the larger contact area created by the conforming (similar curvature) surfaces of the journal and the shell. The mean pressure in the load zone of a journal bearing is determined by the force per unit area, or in this case, the weight or load supported by the bearing divided by the approximate load area of the bearing (the bearing diameter times the length of the bearing). In most industrial applications, these values range from 100 to 300 psi (6.89 to 20.7 bar).

(4) Oils are used in journal bearings when cooling is required or contaminants or debris need to be flushed away from the bearing. High speed journal bearings are always lubricated with oil rather than with grease. Oil is supplied to the bearing either by a pressurized oil pump system, an oil ring, a collar, or a wick. Grooves in the bearing shell (Figure 15-3) are used to distribute the oil throughout the bearings’ surfaces.

Figure 15-3. Typical Plain Bearing.

(5) Segmented journal. These are similar to the journal except that the stationary bearing consists of segments or bearing shoes. Each shoe is individually adjustable. This type of bearing is commonly found in vertical hydroturbine generators and large vertical pumping units. This bearing is usually partially immersed in an oil tub.

(6) Thrust bearings. These bearings (Figure 15-4) support axial loading and consist of a shaft collar supported by the thrust bearing, many times in segments called thrust shoes. The thrust shoes are sometimes allowed to pivot to accommodate the formation of the supporting oil wedges. These bearings, also called “tilting pad” or “pivoting shoe” bearings, consist of a shaft rotating within a shell made up of curved pads. Each pad is able to pivot independently and align with the curvature of the shaft. There are many different configurations of the thrust bearing aimed at equalizing loading and oil wedges. The bearing is immersed in a tub of oil. On large hydroturbine generators and pumps an oil pump is sometimes used to provide an oil film at startup.

Figure 15-4. Radial and Thrust Bearing (Courtesy of Kingsbury Bearings).

(7) Self-lubricated bearings. Chapter 12 provides discussion on self-lubricated bearings. These are journal (sleeve) bearings in which the bearing surface contains a lubricant, usually

solid, that is liberated or activated by friction in the bearing. This type of bearing is gaining popularity as a tainter gate trunnion bearing, wicket gate bearing, or wicket gate linkage bushing.

b. Plain Bearing Lubrication Selection. The most common lubricants for plain bearings are mineral and synthetic oils and greases. Mineral oils are generally used except in extreme hot and cold temperature applications where synthetics provide superior performance. Oil is used for faster rotational speeds where the hydrodynamic oil wedge can be formed and maintained. It is also used in high temperature conditions where grease may melt or degrade. Grease is used for slower rotational speeds or oscillating movements where the hydrodynamic oil wedge cannot form. It is also used in cases of extreme loading where the bearing operates in boundary conditions. Table 15-1 lists some of the important considerations regarding lubricant selection. Generally, oil additives other than extreme pressure additives are not required in plain bearing applications. Some additives and contaminants may cause corrosion so caution should be exercised when using bearing lubricants containing additives or when contaminants may be present.

Table 15-1. Choice of Lubricant.

Lubricant	**Operating Range**	**Remarks**
Mineral oils	All conditions of load and speed	Wide range of viscosities available. Potential corrosion problems with certain additive oils (e.g., extreme pressure) (see Table 5-2).
Synthetic oils	All conditions if suitable viscosity available	Good high- and low temperature properties. Costly.
Greases	Use restricted to operating speeds below 3.28 to 6.56 fps (1 to 2 m/s)	Good where sealing against dirt and moisture is necessary and where motion is intermittent.
Process fluids	Depends on properties of fluid	May be necessary to avoid contamination of food products, chemicals, etc. Special attention to design and selection of bearing materials.
Reference: Neale, M.J. 1995. *A Tribology Handbook*. Butterworth-Heinemann Ltd., Oxford, England.		

c. For hydrodynamic bearings to operate safely and efficiently, a suitable lubricant must always be present at the collar and journal surfaces. The lubricant needs to be cooled to remove the heat generated from oil shear, before re-entering the bearing. It must also be warm enough to flow freely, and filtered so that the average particle size is less than the minimum film thickness. Various methods are applied to provide lubricant to the bearing surfaces. The bearing cavities can be flooded with oil such as vertical bearings that sit in an oil bath. The bearings can also be provided with pressurized oil from an external lubricating system. For high speed bearings, the frictional losses from oil shear and other parasitic losses begin to increase exponentially as the

surface speed enters a turbulent regime. The amount of lubricant required increases proportionately.

15-3. Rolling-Contact Bearings. These are also referred to as antifriction bearings. EM 1110-2-2610. *Mechanical and Electrical Design of Navigation Locks and Dams* (30 June 2013) also discusses these bearing types. Ball, roller, tapered roller, and spherical roller bearings should be selected in accordance with the manufacturer's published catalog ratings of the group, type, and size required. The manufacturer's ratings for loads and speeds shall be used in determining the bearing capacity. Service and installation factors shall be in accordance with the bearing manufacturer's recommendations. Certain bearing types, such as spherical roller bearings, toroidal roller bearings, tapered roller bearings, and spherical roller thrust bearings, typically have a higher operating temperature than other bearing types such as ball bearings and cylindrical roller bearings, under comparable operating conditions. All bearings shall be equipped with labyrinth seals to exclude foreign matter and retain lubrication without leakage under both static and dynamic operating conditions. In rolling-contact bearings, the lubricant film is replaced by several small rolling elements between an inner and outer ring (Figure 15-5). In most cases, the rolling elements are separated from each other by cages. Basic varieties of rolling-contact bearings include ball, roller, and thrust. Advantages of rolling-contact bearings include:

- At low speeds, ball and roller bearings produce much less friction than plain bearings.
- Certain types of rolling-contact bearings can support both radial and thrust loading simultaneously.
- Rolling bearings can operate with small amounts of lubricant.
- Rolling-contact bearings are relatively insensitive to lubricant viscosity.
- Rolling-contact bearings have low wear rates and require little maintenance.

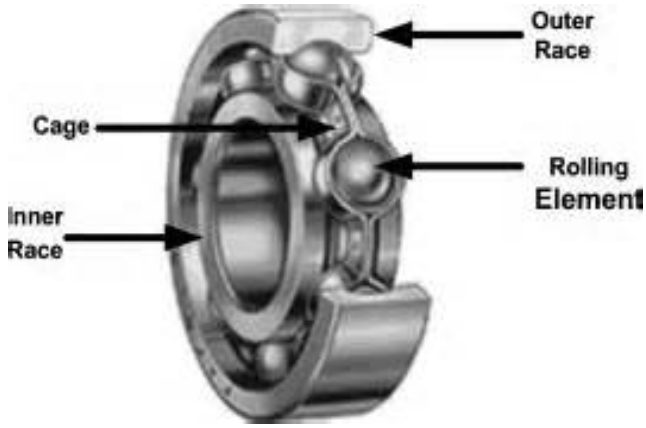

Figure 15-5. Typical Rolling Element Bearing.

a. Types of Rolling-Contact Bearings.

(1) Ball bearing. This bearing has spherical rolling elements in a variety of configurations. It is able to carry both radial and moderate axial loads. A special type, called maximum-type ball bearings, can take an extra 30% radial load, but cannot support axial loads.

(2) Roller bearing. The roller bearing has cylindrical rolling elements and can take much higher radial loads than ball bearings, but can carry no axial loads.

(3) Tapered roller bearing. This type has truncated-cone-shaped rolling elements and is used for very high radial and thrust loads.

(4) Double row spherical. The bearing has a double row of keg-shaped elements. The inner surface of the outer race describes part of a sphere. This bearing can handle thrust in both directions and very high radial loads.

(5) Ball thrust. This type has ball elements between grooved top and bottom races.

(6) Straight roller thrust. This bearing has short segments of cylindrical rollers between upper and lower races. The rollers are short to minimize skidding.

(7) Spherical thrust. This type is also called a tapered roller thrust bearing. The lower race describes part of a sphere. The rolling elements are barrel-shaped and the outside has a larger diameter than the inside. Spherical roller bearings are very similar to cylindrical roller elements with one exception — they are rounded around their midsection. Instead of being a perfect cylinder, spherical roller bearings are rounded so the sides of the cylinder are no longer parallel to each other. This gives them more surface area in contact with the race than a cylindrical element of the same length.

(8) Needle bearing. These bearings have rollers the lengths of which are at least four times their diameter. They are used where space is a factor and are available with or without an inner race. The elements are perfect cylinders, but are stretched to the point that they resemble needles. Although small in diameter, they make up for the surface area in the length they span.

b. Rolling-Contact Conditions. The loads carried by the rolling elements actually cause elastic deformation of the element and race as rotation occurs. The compressive contact between curved bodies results in maximum stresses (called Hertzian contact stresses) occurring inside the metal under the surfaces involved. The repeated stress cycling causes fatigue in the most highly stressed metal. As a result, normal wear of rolling-contact bearings appears as flaking of the surfaces. Lubrication carries away the excessive heat generated by the repeated stress cycles. While lubrication is necessary, too much lubrication, especially with grease lubrication, results in churning action and heating due to fluid friction.

c. Rolling Bearing Lubricant Selection. In most cases, the lubricant type is dictated by the bearing or equipment manufacturer. In practice, there can be significant overlap in applying grease or oil to the same bearing. Often the operating environment dictates the choice of lubricant. For example, a roller bearing on an output shaft of a gearbox will probably be oil-lubricated because it is contained in an oil environment. However, the same bearing with the same rotational speed and loading would be grease-lubricated in a pillow block arrangement. Table 15-2 lists general guidance for choosing the proper lubricant.

Table 15-2. General Guide for Choosing Between Grease and Oil Lubrication.

Factor Affecting the Choice	**Use Grease**	**Use Oil**
Temperature	Up to 248 °F (120 °C) - with special greases or short relubrication intervals up to 392/428 °F (200/220 °C)	Up to bulk oil temperature of 194 °F (90 °C) or bearing temperature of 428 °F (200 °C) - These temperatures may be exceeded with special oils.
Speed factor*	Up to *dn* factors of 300,000/350,000 (depending on design)	Up to *dn* factors of 450,000/500,000 (depending on type of bearing)
Load	Low to moderate	All loads up to maximum
Bearing design	Not for asymmetrical spherical roller thrust bearings	All types
Housing design	Relatively simple	More complex seals and feeding devices necessary
Long periods without attention	Yes, depending on operating conditions, especially temperature	No
Central oil supply for other machine elements	No, cannot transfer heat efficiently or operate hydraulic systems	Yes
Lowest torque	When properly packed can be lower than oil on which the grease is based	For lowest torques, use a circulating system with scavenge pumps or oil mist
Dirty conditions	Yes, proper design prevents entry of contaminants	Yes, if circulating system with filtration

* *dn* factor (bearing bore (mm) x speed (rev/min)).
Note: For large bearings (0.65-mm bore) and nd_m (d_m is the arithmetic mean of outer diameter and bore (mm)).
(Reference: Neale, M.J. 1995. *A Tribology Handbook*. Butterworth-Heinemann Ltd., Oxford, England.

15-4. Grease Selection for Bearings. Grease has become a common lubricant choice for rolling element bearings. Grease is easy to apply, can be retained within a bearing's housing and offers protective sealing capabilities.The lubricating properties of greases are significantly affected by the base oil and type of thickeners used. Table 15-4 at the end of this chapter provides general guidelines for selecting the type of grease for bearing lubrications. The temperature range over which a grease can be used depends largely on the type of base oil and thickener as well as the additives. There is both a high temperature limit and a low temperature limit for bearing grease application. Compared to oil, the advantage is that grease is more easily retained in the bearing arrangement, particularly where shafts are inclined or vertical.

a. Grease is used for slower rotational speeds, lower temperatures, and low to medium loads. Grease is used in situations where maintenance is more difficult or irregularly scheduled. It can be used in dirty environments if seals are provided. Grease has the ability to slow the ingress of contaminants into a bearing and can fill the cavities between bearing components. Bearings not sealed for life or factory-filled should be filled with grease with sufficient free space in the housing (up to 50%) to allow room for the excess grease to be ejected from the bearing during startup. Filling the bearing with grease should be one of the last operations completed when mounting a replacement bearing to ensure cleanliness and minimum contamination.

b. Sodium, lithium, and polyurea base greases are normally preferred for general purpose bearing lubrication. Lime base greases are advantageous for high moisture applications, but should not be operated above 150 °F (66 °C). Lithium complex greases have good water resistant characteristics and may be operated through the same temperature range as sodium base greases. Polyurea greases have excellent water resistance and can be used at higher temperatures.

c. Determining an application's grease relubrication intervals will hinge on the influencing conditions, such as temperature, speed, load, bearing arrangement, and type. Environmental considerations can also prompt an increase in relubrication frequency. In applications where manual lubrication is selected, users should confirm that the lubrication fitting is clean, the right type of lubricant is used and the correct quantity of lubricant supply is set. Grease cleanliness is as important as the proper amount. Extra caution should be given to assure contaminant free relubrication. If contaminated grease is placed into a system, it can potentially cause more damage than a lack of lubrication altogether. Pumping new grease into a system can also help purge some of the old grease in a bearing. Over time, the lubricant in a bearing arrangement will naturally lose its lubricating properties. This underscores the necessity for careful attention to original lubricant selection and indicates advantages in partnering with knowledgeable and experienced suppliers from the start.

d. Antifriction Bearings. The most common problem with the grease lubrication of antifriction bearings is overlubrication. Excess grease will churn within the bearing housing and cause excessive heat, which can soften the grease, reducing its effectiveness and leading to bearing damage. The heat can also cause the grease to expand, increasing the temperature further, and creating enough pressure to damage the bearing seals.

(1) Ideally, a grease-lubricated antifriction bearing should be "packed" by hand so that the bearing housing is approximately one-third full of grease. The bearing housing should be opened, the bearing and all of the old grease removed, and the bearing and the housing thoroughly cleaned. Compressed air should not be used for cleaning or drying the bearing because moisture in the air may induce corrosion in the highly polished bearing surfaces. When clean, the bearing should be thoroughly packed in new grease and the bearing housing filled one-third full of grease.

(2) It is not always practical or possible to hand pack a bearing. In these cases, grease guns or other high pressure devices may be used. Caution should be exercised when using high pressure systems to prevent overgreasing or creating excess pressure in the bearing housing. When grease is applied using a grease gun, the relief plug, if so equipped, should be removed so that, as the new grease is applied, all the old grease is purged from the bearing housing. The machine should be

operated approximately 30 minutes before the plug is replaced to allow excess grease to escape. If the bearing housing does not have a relief plug, grease should be added very infrequently to prevent over greasing, and after grease is added, the pressure fitting, or "zerk," should be removed to prevent pressure retention.

e. Grease-lubricated bushings or journal bearings are not as sensitive to over lubrication as antifriction bearings so "hand packing" is not usually necessary. The most common method of applying grease to a journal bearing is by a high pressure system. This may be a centralized, automatic system, as is used on turbine wicket gates, or it may be a simple grease gun. Over greasing with a high pressure system will not normally damage a journal bearing, but it can damage seals, waste grease, and cause a mess. The most common problem encountered with centralized greasing systems is plugging of the lines. All points that are to be lubricated should be checked regularly to ensure they are receiving grease. If clogging of the lines is a persistent problem, switching to a grease with a lighter consistency or less adhesiveness, or adjusting the cycle frequency and the volume of grease per cycle may be necessary.

15-5. Oil Selection for Bearings.

a. Oil is used for higher rotational speeds and higher operating temperatures. It is often used in drive trains and gearboxes. It is used in maximum loading situations and for bearing configurations where a high amount of heat generated in the bearing can be carried away by the oil. Unlike grease, it can be filtered and is used in dirty conditions when the oil is circulated and filtered. Oil is also used for lubrication where the adjacent components (like gear boxes) are lubricated with oil. For moderate speeds, the following viscosities are recommended. The manufacturer of the bearing should always make the final recommendation.

- Ball and cylindrical roller bearings 12 cSt (12 mm^2/s).
- Spherical roller bearings 20 cSt (20 mm^2/s).
- Spherical roller thrust bearings 32 cSt (32 mm^2/s).

b. In general, oils will be the medium to high viscosity index type with R&O inhibitors. EP oils are required for taper-roller or spherical roller bearings when operating under heavy loads or shock conditions. Occasionally EP oils may be required by other equipment or system components.

c. The *Tribology Handbook* (Neale 1995), *Noria Practical Handbook of Machinery Lubrication* (Noria 2011), and the *Machinery's Handbook*, 29th ed. (Oberg et al. 2012) provide a means for selecting bearing oil lubricant viscosity based on the bearing operating temperature, bore diameter, and speed. Bearing manufacturers also provide this information. Table 15-3 lists some of the methods used to supply lubricants to bearings. The lubricant should be supplied at a rate that will limit the temperature rise of the bearing to 68 °F (20 °C).

Table 15-3. Methods of Liquid Lubricant Supply.

Method of Supply	**Main Characteristics**	**Examples**
Hand oiling	Nonautomatic, irregular. Low initial cost. High maintenance cost.	Low speed, cheap journal bearings
Drip and wick feed	Nonautomatic, adjustable. Moderately efficient. Cheap.	Journals in some machine tools, axles
Ring and collar feed	Automatic, reliable. Efficient, fairly cheap. Mainly horizontal bearings.	Journals in pumps, blowers, large electric motors
Bath and splash lubrication	Automatic, reliable, efficient. Oiltight housing required. High initial cost.	Thrust bearings, bath only. Engines, process machinery, general
Pressure feed	Automatic. Positive and adjustable. Reliable and efficient. High initial cost.	High speed and heavily loaded journal and thrust bearings in machine tools, engines, and compressors

Notes:
Pressure oil feed: This is usually necessary when the heat dissipation of the bearing housing and its surroundings are not sufficient to restrict its temperature rise to 68 °F (20 °C) or less.
Journal bearings: Oil must be introduced by means of oil grooves in the bearing housing.
Thrust bearings: These must be lubricated by oil bath or by pressure feed from the center of the bearing.
Cleanliness: Cleanliness of the oil supply is essential for satisfactory performance and long life.
Reference: Neale, M.J. 1995. *A Tribology Handbook*. Butterworth-Heinemann Ltd., Oxford, England.

d. There are several oil lubrication methods:

- Oil bath.
- Wick.
- Drip.
- Circulating oil.
- Oil jet.
- Oil-air.

(1) Oil bath. The simplest method of oil lubrication is the oil bath. The oil, which is picked up by the rotating components of the bearing, is distributed within the bearing and then flows back to a sump in the housing. The conventional oil bath system for lubricating bearings is satisfactory for low to moderately high speed applications. Typically, the oil level should almost reach the center of the lowest rolling element when the bearing is stationary. A greater amount of oil can cause churning, increase the fluid friction within the bearing, and result in excessive operating temperatures. Unless

the running level of the oil is known, oil level should be checked only when equipment is shut down as the running level can drop considerably below the static level depending on the speed of the application. Because speed, sealing effectiveness, temperature, and type of oil are factors that influence the refilling cycle, regular inspection is necessary to determine the frequency of refilling. Applications of this type generally employ sight gauges to facilitate inspection.

(2) Wick-feed lubrication. Wick-feed oilers, one of the older methods of applying oil to bearings, still enjoy a certain popularity. Properly designed, applied, and maintained, they are effective and inexpensive. Functioning as a filter and quantity regulator, the wick employs either capillary action, or gravity to transfer the oil from the reservoir to bearing. Paraffinic lubricating oils may also be used with this type oiler although they have a tendency to deposit wax crystals on the wick fibers, destroying the effectiveness of the wick. Because napathetic and synthetic oils do not exhibit this tendency, they are preferred for wick oilers.

(3) Drip-feed system. Another one of the older methods of lubrication of oiling bearings is the drip-feed system. This system has been applied successfully to applications where moderate loads and speeds are encountered. The oil introduced through a filter-type, sight feed oiler has a controllable flow rate that is determined by the operating temperature of the particular application.

(4) Oil splash lubrication. This system of lubrication is used primarily in gear boxes where the bearing and gear lubricant is common. The lubrication of bearings in a gearbox, other than one of slow speed, is usually not critical as the oil splash from gear teeth is sufficient to lubricate the bearings. Because of the constant problem of the oil carrying wear debris, the use of filters and magnetic drain plugs is helpful in reducing the possibility of wear debris contaminating the bearings. In applications where heavy oil flow or splash is encountered, bearings equipped with shields to reduce the quantity of oil reaching the bearings are sometimes necessary to prevent overheating caused by fluid friction where the bearing is flooded. In systems where normal splash or washdown is expected to be marginal, oil feeder trails should be designed into the case to direct case washdown into the bearings.

(5) Circulating oil lubrication. In general, high speed operation increases frictional heat, elevates operating temperatures, and accelerates aging of the oil. To reduce operating temperatures and avoid frequent oil changes, the circulating oil lubrication method is generally preferred. This type of system, which uses a circulating pump to assure a positive supply of lubricant to the bearing, can be used for low to moderately high speed and high temperature power transmission applications. The flow path of the oil in this system is important because bearing churning in a captive amount of oil can generate temperatures capable of causing lubricant breakdown and bearing damage. Due to the inherent possibility of contamination from wear debris in heavy duty applications, suitable oil filters and magnetic drain plugs are necessary to prevent damage to the bearings. After the oil has passed through the bearing, it generally settles in a tank where it is filtered and cooled before being returned to the bearing. Proper filtering decreases the contamination level and extends bearing service life. Cooling the oil can also significantly reduce the operating temperature of the bearing.

(6) Oil jet lubrication. The oil jet lubrication method is an extension of circulating oil systems. A jet of oil under high pressure is directed at the side of the bearing. The velocity of the oil jet should be sufficiently high (≥49.2 ft/s [15 m/s]) to penetrate the turbulence surrounding the rotating bearing. Oil jet lubrication is used for very high speed operation, where a sufficient, but not excessive, amount

of oil should be supplied to the bearing without increasing the operating temperature unnecessarily. In such cases, it is necessary to lubricate each bearing location individually, under pressure, and to provide adequately large scavenging drains to prevent the accumulation of oil after passage through the bearing. In certain high speed applications where the bearing itself creates a pumping action, the flow of oil must be adjusted to assure passage through the bearing. This is extremely important where the flow of oil from the jet opposes the pumping action within the bearing.

(7) Oil-air lubrication (oil mist lubrication). The oil-air or oil mist method, uses compressed air to transport small, accurately metered quantities of oil as small droplets along the inside of feed lines to an injector nozzle, where it is delivered to the bearing. This minimum quantity lubrication method enables bearings to operate at very high speeds with relatively low operating temperature. The compressed air serves to cool the bearing and also produces an excess pressure in the bearing housing to prevent contaminants from entering. Oil mist lubrication systems are used in high speed, continuous operation applications. This system permits close control of the amount of lubricant reaching the bearing. The oil may be metered, atomized by compressed air, and mixed with air, or it may be picked up from a reservoir using a venturi effect. In either case, the air is filtered and supplied under sufficient pressure to assure adequate lubrication of the bearings. Control of this type of lubricating system is accomplished by monitoring the operating temperatures of the bearings being lubricated. The continuous passage of the pressurized air and oil through the labyrinth seals used in the system prevents the entrance of contaminants from the atmosphere into the system. To ensure "wetting" of the bearings and to prevent possible damage to the rolling elements and races, it is imperative that the oil mist system be turned on for several minutes before the equipment is started. The importance of the "wetting" the bearings before starting cannot be overstressed and has particular significance for equipment that has been idle for extended periods of time. The successful operation of this type of system is based on the following factors:

- Proper location of the lubricant entry ports in relation to the bearings being lubricated.
- The proper air pressure and oil quantity ratios to suit the particular application.
- The adequate exhaust of the air-oil mist after lubrication has been accomplished.

e. Types of Oil Lubrication. Straight mineral oils are generally the favored lubricant for lubricating rolling bearings. Oils containing EP or antiwear (AW) additives to improve lubricant properties are generally used only in special cases. Synthetic versions of many of the popular lubricant classes are available. Synthetic oils are generally only considered for bearing lubrication in extreme cases, e.g., at very low or very high operating temperatures.

(1) The thickness of the hydrodynamic film, which prevents metal-to-metal contact in a bearing, plays a major role in bearing fatigue life. The thickness of the hydrodynamic film is determined, in part, by the viscosity index (VI) and the pressure-viscosity coefficient. For most mineral oil-based lubricants, the pressure-viscosity coefficient is similar, and generic values obtained from literature can be used. However, for synthetic oils, the effect on viscosity to increasing pressure is determined by the chemical structure of its base stock. As a result, there is considerable variation in pressure-viscosity coefficients for different types of synthetic base stocks. Due to the differences in the viscosity index and pressure-viscosity coefficient, it should be remembered that the formation of a hydrodynamic lubricant film, when using a synthetic oil, may differ from that of a mineral oil with the same viscosity. For additional information about synthetic oils, contact the lubricant supplier.

(2) In addition, additives play a role in the formation of a hydrodynamic film. Due to differences in solubility, different types of additives are used in synthetic oils that are not included in mineral oil-based lubricants.

(3) Selecting oil is primarily based on the viscosity required to form a sufficiently thick hydrodynamic film at normal operating temperature. The viscosity of oil is temperature dependent, becoming lower as the temperature rises. The viscosity-temperature relationship of an oil is characterized by the viscosity index (VI). For rolling bearings, oils with a viscosity index of at least 95 (little change with temperature) are recommended. To form a sufficiently thick oil film in the contact area between the rolling elements and raceways, the oil must retain a minimum viscosity at normal operating temperature.

15-6. Lubricant Selection, Viscosity, and Speed Considerations.

a. Friction between the lubricant and the bearing components is a function of the characteristics of the lubricant and the design of the bearing. All of these factors contribute significantly to the frictional resistance of the bearing and must be considered when selecting the proper lubricant. Of equal importance when selecting a lubricant for a specific application, are the actual operating conditions in addition to the bearing's characteristics. A shaft system consists of more than just bearings. Associated components like the shaft and housings are integral parts of the overall system. The lubricant and sealing elements also play a crucial role. To maximize bearing performance, the correct amount of an appropriate lubricant must be present to reduce friction in the bearing and protect it from corrosion. Sealing elements are important because they keep the lubricant in, and contaminants out, of the bearing cavity. This is particularly important since cleanliness has a profound effect on bearing service life. There are several factors that influence the selection of a lubricant for a bearing. This includes:

- Bearing speed.
- Bearing size.
- Type of bearing.
- Load.
- Low and high operating temperatures.
- Ambient conditions.
- How the lubricant will be applied.

b. As noted previously, the bearing speed will dictate whether a grease or oil-lubricated bearing will be necessary. Viscosity is the most critical lubricant property for ensuring adequate lubrication of plain bearings. If the viscosity is too high, the bearings will tend to overheat. If the viscosity is too low, the load-carrying capacity will be reduced. The viscosity grade required depends on bearing RPM, oil temperature, and load.

c. Journal Bearings. The required ISO grade number for journal bearings should be coordinated with the manufacturer based on specific application. The load, speed, and temperature range are necessary for proper bearing selection. ISO 68- and 100-Grade oils are

commonly used in indoor, heated applications, with 32-Grade oils being used for high speed (10,000 RPM) units and some outdoor low temperature applications. The higher the bearing speed, the lower the oil viscosity that is required. The higher the operating temperature of the unit, the higher the oil viscosity that is required. If vibration or minor shock loading is possible, a higher grade of oil than the one indicated should be considered.

d. It is not the intent of this manual to provide specific design guidance for bearings. All the major bearing manufacturers (Timken, SKF, Kingsbury, etc.) provide detailed design guidance including selection charts for the proper viscosity of lubricating oil and grease. Some frequently used bearing terms are explained here. For a detailed collection of bearing-specific terms and definitions, refer to ISO 5593. Some specific information necessary to properly design rolling bearings include:

A = speed factor [mm/min] = $n\ d_m$.

C = bearing load rating [kN].

d_m = bearing mean diameter [mm] = 0.5 (d + D).

F = actual bearing load [kN].

L = life, typically in million revolutions or operating hours.

n = rotational speed [r/min].

P = equivalent bearing load [kN].

P_u = fatigue load limit [kN].

η_c = factor for contamination level.

κ = viscosity ratio: actual versus required.

ν = oil viscosity [mm^2/s].

e. The speed factor in mm/min (also referred to as speed index) is determined by multiplying the pitch diameter of the bearing by the bearing speed as follows:

$$A = n\,\frac{(D+d)}{2} \tag{15-1}$$

where:

D = bearing diameter (mm)

d = the bore diameter (mm)

n = the speed in rev/min.

Speed factors above 200,000 are usually indicative of fluid film lubrication applications.

15-7. Bearing Degradation. Due to the elastohydrodynamic mode in which rolling bearings operate, these bearings are susceptible to water and particle contamination. Water, contaminants, and corrosion can all lead to bearing degradation. Studies have shown that the fatigue life of a

bearing can be extended dramatically by reducing the amount of water contained in a petroleum-based lubricant.

a. Particle Contamination. Particle contamination can cause abrasion and surface fatigue in bearings. This greatly shortens the life of a bearing. Rolling elements undergo a lubrication regime known as elastohydrodynamic lubrication. In this regime, the fluid film is usually less than 1 micron, and undergo very high pressures. The oil momentarily turns into a solid and elastically deforms the rolling element and the mating surface. Any contamination can interfere with this process and cause bearing damage. Particles present in the load zone cause surface degradation of the mating surfaces and can lead to the generation of more wear particles. Bearings operating in a contaminated lubricant exhibit much higher levels of wear.

b. Water. Water has a significant effect on bearing life. One study conducted by Timken Bearing Company, “Effect of Water in Lubricating Oil on Bearing Fatigue Life,” by Richard Cantley (1976), suggested the following: “The effect of water in an SAE 20 oil on tapered roller bearing fatigue life was evaluated. Full-scale bearing life tests were conducted with water concentrations of 25, 100, and 400 ppm. Good correlation was obtained between fatigue life and water content and the detrimental effects of water on fatigue life at these levels were clearly demonstrated. As a result of the fatigue life findings at the specified water concentrations, the water absorption properties of various oils were evaluated under controlled relative humidity conditions. These results indicated that a lubricant’s capacity for water absorption represents an important factor that could significantly affect bearing fatigue life. The evaluation of a water-inhibiting additive was also included in this study.” Other studies have shown an exponential drop in bearing life as water content rises from 200 ppm to 500 ppm.

c. Oxidation Resistance. From a quality standpoint, the most important property of an oil is its chemical or oxidation stability. All lubricating fluids are subject to a continual chemical combination with oxygen to form a multitude of compounds. Subsequently, through polymerization and condensation reactions, oil in soluble gum, sludge, and varnish will be formed. This can reduce bearing clearances, plug lines, increase operating temperature, and further accelerate lubricant deterioration, which will end with bearing failure. Lubricating fluids vary in ability to resist oxidation effects.

d. Oxidation stability depends on the fluid type, refining methods, and whether oxidation inhibitors are present. In a circulating or splash system, the oxidation rate is not only a function of the oil, but also of the operating conditions. Temperature, contaminants, water, metal surfaces, and agitation all favor oxidation and all are present in lubrication systems.

Table 15-4. Effect of Environmental Conditions on Choice of a Suitable Type of Grease.

NLGI		Speed Maximum (Percentage Recommended Maximum for Grease)	Environment	Typical Service Temperature				Base Oil Viscosity (approximate values)	Comments
				Maximum		Minimum			
Type of Grease	Grade No.			°C	°F	°C	°F		
Lithium	2	100	Wet or dry	100	210	-25	-13	Up to 140 cSt (140 mm^2/s) at 100 °F (37.7 °C)	Multipurpose, not advised at max. speed or max. temperatures for bearings above 65-mm (2.5-in.) bore or on vertical shafts
		75		135	275				
Lithium	3	100	Wet or dry	100	210	-25	-13		
		75		135	275				
Lithium EP	1	75	Wet or dry	90	195	-15	5		Recommended for roll-neck bearings and heavily loaded taper-roller bearings
Lithium EP	2	100	Wet or dry	70	160			14.5 cSt (14.5 mm^2/s) at 210 °F (98.8 °C)	
		75		90	195	-15	5		
Calcium (conventional)	1, 2, and 3	50	Wet or dry	60	140	-10	14	140 cSt (140 mm^2/s) at 100 °F (37.7 °C)	
Calcium EP	1 and 2	50	Wet or dry	60	140	-5	25	14.5 cSt (14.5 mm^2/s) at 210 °F (98.8 °C)	
Sodium (conventional)	3	75/100	Dry	80	175	-30	-22	30 cSt (30 mm^2/s) at 100 °F (37.7 °C)	Sometimes contains 20% calcium
Clay		50	Wet or dry	200	390	10	50	550 cSt (550 mm^2/s) at (100 °F 37.7 °C)	
Clay		100	Wet or dry	135	275	-30	-22	Up to 140 cSt (140 mm^2/s) at 100 °F (37.7 °C)	
Clay		100	Wet or dry	120	248	-55	-67	12 cSt (12 mm^2/s) at 100 °F (37.7 °C)	Based on SEs
Silicone/Lithium		75	Wet or dry	200	390	-40	-40	150 cSt (150 mm^2/s) at 77 °F (25 °C)	Not advised for conditions where sliding occurs at high speed or load

Reference: Neale, M.J. 1995. *A Tribology Handbook*. Butterworth-Heinemann Ltd., Oxford, England.

THIS PAGE INTENTIONALLY LEFT BLANK

CHAPTER 16

Miscellaneous Lubrication Applications

16-1. Introduction. This chapter discusses lubrication as it applies to specific equipment generally encountered at dams, hydroelectric power plants, pumping plants, and related water conveyance facilities. Lubrication of equipment related to navigation structures is also discussed. Complete coverage of all the auxiliary equipment to be encountered at these various facilities would be too extensive to include in this manual. Furthermore, a significant amount of information related to proper lubrication of this equipment is readily available from manufacturer data and operation and maintenance manuals. The Bureau of Reclamation has also published a document outlining maintenance and service requirements (including lubrication requirements) of hydropower equipment and pumps. The document, FIST (Facilities Instructions, Standards, and Techniques) Volume 4-1A, *Maintenance Scheduling for Mechanical Equipment* is included in Appendix F. It states, "This document is intended to establish recommended practice as well as to give general advice and guidance in the maintenance of mechanical equipment owned and operated by the Bureau of Reclamation (Reclamation)." The American Society of Civil Engineers (ASCE) has published a book, *Water Control Gates – Guidelines for Inspection and Evaluation*. This book also provides specific inspection and maintenance requirements for a variety of gates including lubrication requirements. The following discussions emphasize major equipment such as turbines, pumps, governors, gates, hoists, and gear drives. Much of this equipment is custom designed and constructed according to specifications, at significantly greater cost than off-the-shelf commercial equipment. Proper selection of a lubricant depends on an understanding of the lubricating regime (i.e., film, mixed, boundary), established conventions of classifications, and an ability to interpret and apply the producer's product data specifications to the equipment.

16-2. Stormwater Pumps and Motors. Stormwater pumps and motors come in various shapes and sizes, but can be divided into categories. The first dividing criterion is the orientation of the shaft. Pumps are available in vertical shaft and horizontal shaft configurations. The second criterion is the size of the unit. Large units are similar in layout and component size to hydro generators. Some parts are embedded, and the pump appears to be built into the pumping plant. Small units have a wide range of size, but generally have an identifiable pump and motor and often are mounted on skids or plates. For additional information on pumps and lubrication, refer to EM 1110-2-3102, *General Principles of Pumping Station Design and Layout* (28 February 1995) and EM 1110-2-3105, *Mechanical and Electrical Design of Pumping Stations* (30 November 1999. EM 1110-2-4205, *Hydroelectric Power Plants, Mechanical Design* (30 June 1995) provides lubrication requirements of hydropower equipment. Lubrication of pumping equipment should follow manufacturer recommendations. Many times the lubrication requirements for pumps are provided in the technical specifications. Detailed lubrication procedures should be provided in the operation and maintenance manuals.

a. Large Units.

(1) Large units with vertical shafts typically use journal bearings and a sliding contact thrust bearing. These units sometimes are dual-purpose, being used both as pumping units and turbine generators. There may be a plant oil system that has oil storage and filtering capabilities. R&O

turbine oil with viscosity of 32 cSt (32 mm^2/s) is a common lubricant. Automatic grease lubrication systems (Figure 16-1) are often used on larger vertical pumps (see below). These types of automatic lubrication systems are typically computer (Programmable Logic Controller [PLC]) controlled and provide specific metered amounts of grease to the pump bearings based on operating time.

Figure 16-1. Automatic Grease Lubrication System for a Vertical Pump.

(2) Large units with horizontal shafts use journal bearings. Each bearing has its own oil reservoir. Oil rings that rotate with the shaft pick up oil from the reservoir, and it runs or drips down into holes in the top of the bearing. Very large units may have an oil pump to provide an oil film before startup. R&O turbine oil with viscosity of 32 cSt (32 mm^2/s) is a common lubricant.

b. Small Units.

(1) Smaller vertical shaft machines may have a variety of pumps attached to the motor, such as propeller, vertical turbine, or mixed flow. These pumps normally have a grease-lubricated suction bushing, and the rest of the bearings in the pump itself are sleeve-type that are either lubricated by the fluid being pumped (product-lubricated) or else by oil dripped into a tube enclosing the shaft bearings (oil-lubricated). There are also vertical pumps with bronze bearings or bushings that are grease-lubricated by individual grease lines connected to grease points at floor level.

(2) Motors for the smaller vertical units generally use rolling-contact bearings. The upper bearing is a combination of radial and thrust bearing. This is often a single-row spherical bearing. Because of the large heat loads associated with these bearing types and conditions, they are usually oil-lubricated. The lower bearing is either a ball or roller bearing and is lubricated by grease. This

bearing provides radial support and is configured in the motor to float vertically so it is not affected by axial thrust.

(3) Smaller horizontal units often have rolling-contact bearings in both the pump and motor, and can be lubricated by either grease or oil. Oil-lubricated bearings will have an individual oil reservoir for each bearing that is fed by an oil level cup that maintains the level of the oil. Grease-lubricated bearings can have grease cups that provide a reservoir with a threaded top that allows new grease to be injected into the bearing by turning the top a prescribed amount at set intervals of time. In some cases, grease nipples are provided. These receive a prescribed number of strokes from a manual grease gun at specified time intervals.

c. Maintenance. For all of the bearing types that use oil, the most common type of oil found is R&O turbine oil. For the greased bearings, a lithium-based grease designated NLGI 2 is the most common. The pump and motor manufacturer should provide the recommended oil and grease change intervals.

(1) Oil changes sometimes do little good if the oil is cold and particulate matter has been allowed to settle out. This problem is resolved by changing the oil after the pump has been running at normal operating temperature. Running the pump helps mix particles into the oil before it is drained. Another method that may work is to drain the oil, then flush the oil reservoir with warmed oil, discard the oil, then fill the bearing. This can help to dislodge foreign matter that has settled to the bottom.

(2) Another problem is condensation caused by thermal cycling of the motor as it starts and stops. A desiccant air breather on the bearing equalizing air intake will prevent extra moisture from being taken into the reservoir. Proper flushing of the oil reservoir can help carry out water that has collected in the low spots.

(3) Having adequate grease in rolling element bearings is important, but too much grease can cause overheating and bearing failure. Maintenance procedures must be followed to avoid over greasing.

(4) Bearing housings need to be disassembled and all the old grease cleaned out and replaced at intervals. See Chapter 15 for additional discussion on bearing lubrication.

16-3. Couplings. EM 1110-2-2610, *Mechanical and Electrical Design of Navigation Locks and Dams* (30 June 2013) provides additional discussion on coupling types and design. For new installations, the coupling manufacturer should always be consulted for the proper type of lubricant to use in the coupling. Couplings requiring lubrication are usually spring, chain, gear, or fluid drive type. Table 16-1 lists lubricant recommendations for couplings. Additional recommendations are provided below.

Table 16-1. Recommendations for the Lubrication of Gear, Spring-Type, Chain Couplings

Lubricant Type	Limiting Criteria				Remarks
	Centrifugal Effects		Heat Dissipation Pn	Lubricant Change Period	
	Pitch Line Acceleration $d^2/2$ (m/sec^2)	Range in Practical Units Dn^2 (ft/sec^2)			
No. 1 Grease (mineral oil base)	0.15×10^3	25 max	—	2 years	Soft grease preferred to ensure
	0.5×10^3	25-80	—	12 months	Penetration of lubricant to gear teeth
No. 3 Grease (mineral oil base)	1.5×10^3	80-250	—	9 months	Limitation is loss of oil causing hardening of grease (No. 3 grease is more mechanically stable than No. 1)
	5.0×10^e	250-850	—	6 months	
	12.5×10^3	850-2000	—	3 months	
Semifluid polyglycol grease or mineral oil	45.0×10^3	3000-5000	230×10^3 max	2 years	Sealing of lubricant in coupling is main problem
Notes: d = pcd, m; D = pcd, ft; 4> = rads/sec; n = rev/sec; P = hp transmitted Reference: Neale, M.J. 1995. *A Tribology Handbook*. Butterworth-Heinemann Ltd., Oxford, England.					

a. General Lubrication. Lubrication should follow the manufacturer's recommendations. When no suitable recommendations are available, NLGI No 1 to 3 grease may be used for grid couplings. Gear and chain couplings (Figure 16-2) may be lubricated with NLGI No. 0 to 3 grease.

b. Grease-Lubricated Couplings.

(1) Normal applications. This condition is descriptive of applications where the centrifugal force does not exceed 200 g (0.44 lb), motor speed does not exceed 3600 rpm, hub misalignment does not exceed three-fourths of 1 degree, and peak torque is less than 2.5 times the continuous torque. For these conditions, an NLGI No. 2 grease with a high viscosity base oil (higher than 198 cSt [198 mm^2/s] at 104 °F [40 °C]) should be used.

(2) Low speed applications. This application includes operating conditions where the centrifugal force does not exceed 10 g (0.2 lb). If the pitch diameter "*d*" is known, the coupling speed "*n*" can be estimated from the following equation (Mancuso and South 1994):

$$n = \frac{200}{\sqrt{d}} \tag{16-1}$$

Misalignment and torque are as described for normal conditions in (1) above. For these conditions, an NLGI No. 0 or No. 1 grease with a high viscosity base oil (higher than 198 cSt [198 mm^2/s] at 104 °F [40 °C]) should be used.

Figure 16-2. Gear Coupling with Grease Fitting.

(3) High speed applications. This condition is characterized by centrifugal forces exceeding 200 g (0.44 lb), misalignment less than 0.5 degrees, with uniform torque. The lubricant must have good resistance to centrifugal separation. Consult a manufacturer for recommendations.

(4) High-torque, high-misalignment applications. This condition is characterized by centrifugal forces less than 200 g (0.44 lb), misalignment greater than 0.75 degrees, and shock loads exceeding 2.5 times the continuous torque. Many of these applications also include high temperatures (212 °F [100 °C]), which limits the number of effective greases with adequate performance capability. In addition to the requirements for normal operation, the grease must have antifriction and antiwear additives (polydisulfide), extreme pressure additives, a Timken load greater than 20.4 kg (40 lb), and a minimum dropping point of 302 °F (150 °C).

c. Oil-Lubricated Couplings. Most oil-filled couplings are the gear type. Use a high viscosity grade oil not less than 150 SUS at 100 °F (37.7 °C). For high speed applications, a viscosity of 2100 to 3600 SUS at 100 °F (37.7 °C) should be used.

16-4. Hoist and Cranes.

a. General. Various types of hoisting equipment (e.g., Figure 16-3) are used in hydroelectric power plants and pumping plants, including gantry cranes, overhead traveling cranes, jib cranes, monorail hoists, and radial gate hoists. The primary components requiring lubrication are gear sets, bearings, wire ropes, and chains. The lubrication requirements for gear sets should comply with the same AGMA requirements for gears discussed in Chapter 14. Hydraulic systems are discussed in Chapter 10. Lubrication of wire ropes and chains used in hoists and cranes is discussed later in this chapter.

Figure 16-3. Pedestal Mounted Crane for Lifting Bulkheads.

b. Hydraulic Brakes. Hydraulic brakes are commonly found on cranes and hoists. Both drum and disk brakes are used in these applications. Components closely resemble automotive parts and similar brake fluids are used. Brake fluid is glycol-based and is not a petroleum product. Hydraulic brake fluid has several general requirements:

- It must have a high boiling temperature.
- It must have a very low freezing temperature.
- It must not be compressible in service.
- It must not cause deterioration of components of the brake system.
- It must provide lubrication to the sliding parts of the brake system.

(1) Hydraulic brake fluids are acceptable for use if they meet or exceed the following requirements:

(a) Federal Motor Vehicle Safety Standard (FMVSS) No. 116, “Motor Vehicle Brake Fluids” (DOT 3). This includes a dry boiling temperature of 401 °F (205 °C). This is commonly known as DOT 3 brake fluid. Some industrial braking systems require Wagner 21B fluid, which is a DOT 3 fluid with a 450 °F (232 °C) dry boiling temperature and containing additional lubrication and anti-oxidation additives.

(b) SAE Specification J1703 - Motor Vehicle Brake Fluid. This standard assures all the necessary qualities of the brake fluid and also assures that fluids from different manufacturers are compatible.

(2) SAE Recommended Practice J1707, "Service Maintenance of SAE J1703, Brake Fluids in Motor Vehicle Brake Systems." This guidance provides basic recommendations for general maintenance procedures that will result in a properly functioning brake system. The largest problem with glycol brake fluids is that they absorb moisture from the atmosphere. If left in service long enough, the brake fluid will become contaminated with water, and this can cause brake failure. Water can collect in the lowest part of the system and cause corrosion, which damages seals or causes leak paths around them. DOT 3 brake fluid that is saturated with water will have its boiling temperature reduced to 284 °F (140 °C). If water has separated out, the brake fluid will have a boiling temperature of 212 °F (100 °C). Under heavy braking, the temperature of the brake fluid can become so high that the brake fluid will boil or the separated water will flash into steam and make the brake fluid very compressible. This will result in loss of braking capacity, from spongy brakes to a complete loss of braking function. Brake fluid should be completely replaced every 3 yrs unless the manufacturer's recommended interval is shorter. Also, if brake fluid deterioration is noticeable due to a high humidity working environment, it should also be replaced more frequently. Because brake fluid readily absorbs moisture from the air, only new dry fluid from unopened containers should be used as a replacement. This means that brake fluid left over from filling or refilling operations should be discarded. For this reason, it is recommended that the user purchase brake fluid in containers small enough that the fluid can be poured directly from the original container into the brake system fill point. Under no circumstances should brake fluid be purchased in containers larger than 1 gallon (3.79 L).

16-5. Wire Rope Lubrication.

a. Lubricant-Related Wear and Failure. Wear in wire ropes (Figure 16-4) may be internal or external. The primary wear mode is internal and is attributed to friction between individual strands during flexing and bending around drums and sheaves. This condition is aggravated by failure of the lubricant to penetrate the rope. Wire rope lubricants have two principal functions. The first is to reduce friction as the individual wires move over each other. The second is to provide corrosion protection and lubrication in the core and inside wires, and on the exterior surfaces of the wire rope. The life of a wire rope can be extended through the proper application of the correct lubricant. Unless the rope is constructed of stainless steel, it is also subject to corrosion damage. Corrosion is especially a problem for wire ropes that are exposed to the elements and submerged in water. Additional information on wire rope selection, design, and lubrication can be found in EM 1110-2-3200, *Wire Rope Selection Criteria for Gate Operating Devices* (02 April 2004).

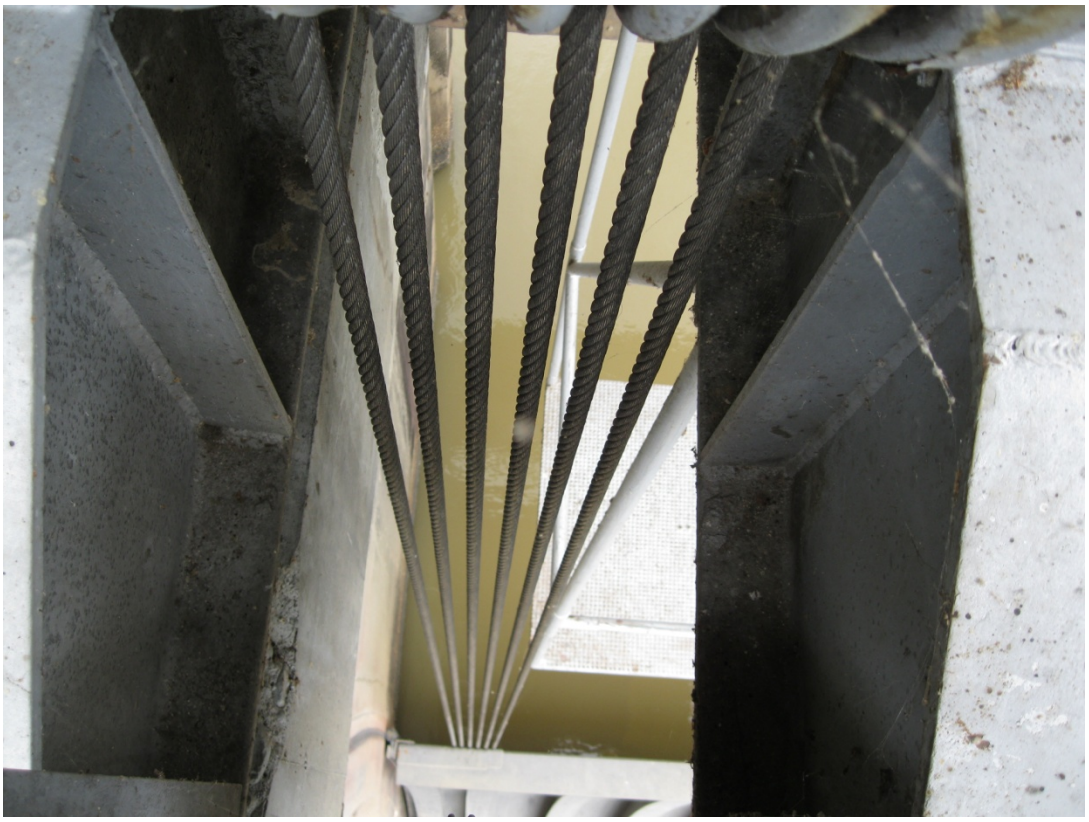

Figure 16-4. Wire Ropes for Lifting a Tainter Gate.

(1) Corrosion. Corrosion damage is more serious than abrasive damage and is usually caused by lack of lubrication. Corrosion often occurs internally where it is also more difficult to detect. Corrosion of wire ropes occurs when the unprotected rope is exposed to weather, to corrosive environments such as submergence in water (especially salt water), or to chemicals. Corrosion results in decreased tensile strength, decreased shock, or impact-load resistance, and loss of flexibility. Unprotected wire ropes that are used infrequently have a greater potential for rust damage due to moisture penetration. Rust may prevent relative sliding between wires, creating increased stresses when the rope is subsequently placed in service.

(2) Abrasion. A common misconception among facility operators is that stainless steel ropes do not require lubrication. This misconception is probably due to corrosive operating conditions. This misconception is easily corrected by considering a wire rope as a machine with many moving parts. The typical wire rope consists of many wires and strands wrapped around a core. A typical 6 x 47 independent wire rope core (IWRC) rope, is composed of 343 individual wires that move relative to each other as the rope is placed under load or wrapped around a drum. During service, these wires are subject to torsion, bending, tension, and compression stresses. Like all machine parts, ropes also wear as a result of abrasion and friction at points of moving contact. Therefore proper lubrication is essential to reduce friction and wear between the individual wires and to ensure maximum performance.

b. Lubrication. During operation, tension in the rope and pressure resulting from wrapping around drums forces the internal lubricant to the rope surface where it can be wiped or washed

off. Tests conducted on dry and lubricated rope operating under similar conditions provide ample evidence of the beneficial effects of lubrication. The fatigue life of a wire rope can be extended significantly (200 to 300%) through the application of the correct lubricant for the operating conditions. However, under certain operating conditions lubrication may be detrimental. Unless recommended by the rope manufacturer, wire rope operating in extremely dirty or dusty environment should not be lubricated. Abrasives may combine with the lubricant to form a grinding compound that will cause accelerated wear. In applications where ropes undergo frequent and significant flexing and winding around a drum, the rope should be lubricated regardless of whether the wire rope is constructed from stainless steel. See EM 1110-2-2610, *Mechanical and Electrical Design of Navigation Locks and Dams* (30 June 2013) for further discussion.

c. Lubricant Functions and Qualities. There are two types of wire rope lubricants, penetrating and coating. Penetrating lubricants contain a petroleum solvent that carries the lubricant into the core of the wire rope then evaporates, leaving behind a heavy lubricating film to protect and lubricate each strand. Coating lubricants penetrate slightly, sealing the outside of the cable from moisture and reducing wear and fretting corrosion from contact with external bodies. Some performance attributes to look for in a wire rope lubricant are wear resistance and corrosion prevention. Some useful performance benchmarks include high four-ball EP test values, such as a weld point (ASTM D2783) of above 350 kg and a load wear index of above 50. For corrosion protection, look for wire rope lubricants with salt spray (ASTM B117) resistance values above 60 hours and humidity cabinet (ASTM D1748) values of more than 60 days. To be effective, a wire rope lubricant should:

- Have a viscosity suitable to penetrate to the rope core for thorough lubrication of individual wires and strands.
- Lubricate the external surfaces to reduce friction between the rope and sheaves or drum.
- Form a seal to prevent loss of internal lubricant and moisture penetration.
- Protect the rope against external corrosion.
- Be free from acids and alkalis.
- Have enough adhesive strength to resist washout.
- Have high film strength.
- Not be soluble in the medium surrounding it under actual operating conditions.
- Not interfere with the visual inspection of the rope for broken wires or other damage.

(1) New wire rope is usually lubricated by the manufacturer. Periodic lubrication is required to protect against corrosion and abrasion and to ensure long service life. Wire rope lubricants may require special formulations for the intended operating conditions (for example, submerged, wet, dusty, or gritty environments). The rope manufacturer’s recommendations should always be obtained to ensure proper protection and penetration. When the manufacturer’s preferred lubricant cannot be obtained, an adhesive-type lubricant similar to that used for open gearing may be acceptable.

(2) Two types of lubricants are generally used: oils and adhesives (greases). Often mineral oil, such as an SAE 10 or 30 motor oil, is used to lubricate wire rope. The advantage of a light oil is that it can be applied cold with good penetration. However, the light oil may not contain adequate corrosion inhibitors for rope applications. Also, it tends to work out of the rope just as easily as it works in, necessitating frequent applications.

(3) Heavy, adhesive lubricants or grease provide longer lasting protection. To ensure good penetration, these lubricants usually require thinning before applying. Thinning can be accomplished by heating the lubricant to a temperature of 160 to 200 °F (71 to 93 °C), or by diluting with a solvent. A properly applied heavy lubricant will provide both internal lubrication and a durable external coating to prevent corrosion and penetration of dust and abrasives. Various types of greases are used for wire rope lubrication. These coating types penetrate partially, but usually do not saturate the rope core. Common grease thickeners include sodium, lithium, lithium complex, and aluminum complex soaps. Greases used for this application generally have a soft semifluid consistency. They coat and achieve partial penetration if applied with pressure lubricators.

(4) In addition to the qualities noted above, good adhesive lubricants or rope dressings:

- Must not cake, gum, or ball up when contaminated with dust and dirt.
- Must not thin and drip at the highest operating temperature.
- Must not become brittle or chip at the lowest operating temperature.
- Should have inherently high viscosity without adding thickeners or fillers.

d. Lubrication Application.

(1) When damp conditions prevail, or when severe flexing under heavy loads is encountered, a two-stage lubricant application may be the most effective. Application of a lighter adhesive followed by a very heavy adhesive lubricant to seal in the oil provides the best protection. In certain ropes subjected to highly corrosive environments such as acids, alkalis, or salt water, providing a heavy impervious exterior lubricant coating to guard against corrosion may be more important than ensuring adequate penetration.

(2) Wire rope lubricants can be applied by brush, spray, drip, or preferably by passing the rope through a pressurized lubricator. Before application, the rope must be cleaned of any accumulated dirt, dust, or rust to ensure good penetration. See EM 1110-2-2610, *Mechanical and Electrical Design of Navigation Locks and Dams* (30 June 2013) for further discussion. The lubricant should be applied to the entire circumference of the rope and the rope slowly wound on and off the drum several times to work the lubricant into the rope (Figure 16-5). If the lubricant is being applied by hand, it may be helpful to apply the lubricant as it passes over a sheave where the rope's strands are spread by bending and the lubricant can penetrate more easily. Pressure lubrication devices for wire rope are available. These can allow lubricant to be applied to the core of the wire rope. If a cable is dirty or has accumulated layers of hardened lubricant or other contaminants, it must be cleaned with a wire brush and petroleum solvent, compressed air, or steam cleaner before relubrication. The wire rope must then be dried and lubricated immediately to prevent rusting. Field lubricants can be applied by spray, brush, dip, drip, or pressure boot.

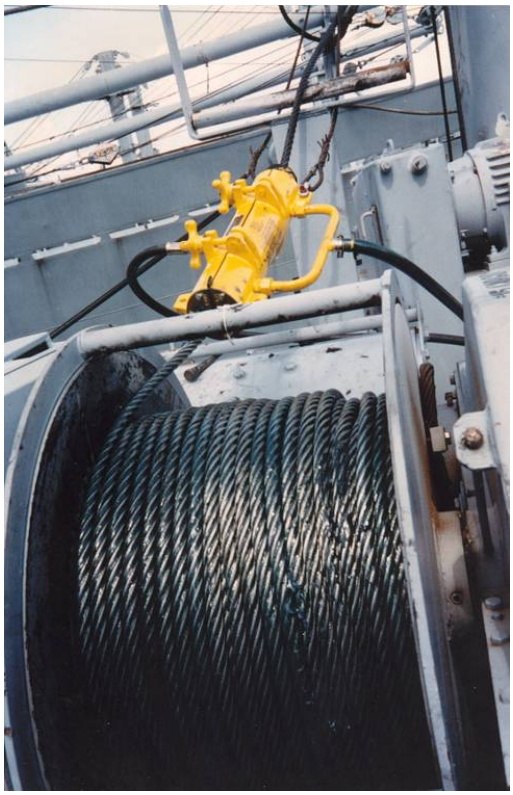

Figure 16-5. Wire Rope Lubricator.

e. Rope Applications and Lubricant Requirements. There are five general rope application categories based on operating conditions: industrial or outdoor, friction, low abrasive wear and corrosion, heavy wear, and standing. Table 16-2 lists these conditions. Each of these conditions has its own lubrication requirements.

(1) Industrial or outdoor applications. This category includes mobile, tower, and container cranes. Internal and external corrosion are possible, but external corrosion is the more serious and deserves primary consideration. Desirable lubricant qualities include good penetration into the wires and core, moisture displacement, corrosion protection, resistance to washout and emulsification, and freedom from buildup due to repeated applications. The best lubricants for these applications are solvent-based that leave a thick, semidry film after evaporation of the solvent. A tenacious semidry film will minimize adhesion of abrasive particles that cause wear. Thin-film lubricants such as MoS_2 and graphite are not recommended because they tend to dry, causing surface film breakdown and subsequent exposure of the wires.

(2) Friction applications. This category includes elevators, friction hoists, and capstan winches. Fatigue and corrosion are the primary considerations. Desirable lubricant qualities include corrosion protection, internal lubrication, moisture displacement, lubricant buildup prevention, and minimizing loss of friction grip. Note that unlike other lubrication applications, where efforts are made to reduce friction, in this instance a desirable quality includes increasing the coefficient of friction. A solvent-based dressing that deposits a thin slip-resistant semidry film offers the best protection.

Table 16-2. Lubrication of Wire Ropes in Service.

Parameter	Operating Conditions				
	(1)	(2)	(3)	(4)	(5)
	Ropes working in industrial or Marine environments	**Ropes subject to heavy wear**	**Ropes working over sheaves where (1) and (2) are not Critical**	**As (3) but for friction drive applications**	**Standing ropes not subject to bending**
Predominant cause of rope deterioration	• Corrosion	• Abrasion	• Fatigue	• Fatigue – corrosion	• Corrosion
Typical applications	• Cranes and derricks working on ships, on docksides, or in polluted atmospheres	• Mine haulage, excavator draglines, scrapers, and slushers	• Cranes and grabs, jib suspension ropes, piling, percussion, and drilling	• Lift suspension, compensating and governor ropes, mine hoist ropes on friction winders	• Pendant ropes for cranes and excavators; guys for masts and chimneys
Dressing requirements	• Good penetration to rope interior. • Ability to Displace moisture. • Internal and external corrosion protection. • Resistance to "wash-off." • Resistance to emulsification.	• Good antiwear properties. • Good adhesion to rope. • Resistance to removal by mechanical forces.	• Good penetration to rope interior. • Good lubrication properties. • Resistance to "fling off."	• Non-slip property. • Good penetration to rope interior. • Ability to displace moisture. • Internal and external corrosion protection.	• Good corrosion protection. Resistance to "wash-off." Resistance to surface cracking.
Type of lubricant	• Usually a formulation containing solvent leaving a thick (0.1 mm) soft grease film	• Usually a very viscous oil or soft grease containing MoS_2 or graphite. • Tackiness additives can be of advantage.	• Usually a good general purpose lubricating oil of about SAE 30 viscosity	• Usually a solvent-dispersed temporary corrosion preventive leaving a thin, semi-hard film	• Usually a relatively thick, bituminous compound with solvent added to assist application
Application technique	• Manual or Mechanical	• Manual or Mechanical	• Mechanical	• Normally by hand	• Normally by hand
Frequency of application*	• Monthly	• Weekly	• 10/20 cycles per day	• Monthly	• 6 monthly/2 yrs

*The periods indicated are for the general case. The frequency of operation, the environmental conditions, and the economics of service dressing will more correctly dictate the period required.

Reference: Neale, M.J. 1995. *A Tribology Handbook*. Butterworth-Heinemann Ltd., Oxford, England.

(3) Low abrasive wear and corrosion applications. This category includes electric overhead cranes, wire rope hoists, indoor cranes, and small excavators. Internal wear leading to fatigue is the primary cause of rope deterioration and SAE 30 is commonly accepted as the best alternative, but these oils provide minimal corrosion protection and tend to run off. The best alternative is to use a lubricant specifically designed for wire rope applications. These lubricants contain corrosion inhibitors and tackiness agents. Thin-film dry lubricants such as MoS_2 and graphite are also commonly used, but claims of increased fatigue life attributed to these lubricants have been questioned by at least one wire rope manufacturer.

(4) Heavy wear applications. This category includes ropes used in excavators, winches, haulage applications, and offshore mooring systems and dredgers. Protection against abrasion is the primary consideration. Desirable lubricant qualities include good adhesion, crack and flake resistance, antiwear properties, resistance to moisture, emulsification, and ultraviolet degradation, and corrosion resistance — especially in offshore applications. The best lubricants are those with thixotropic (resistance to softening or flow under shear) characteristics to ensure good lubricity under shearing action. These lubricants offer good penetration, and they resist cracking and ultraviolet degradation. Viscous oils or soft grease containing MoS_2 or graphite are commonly used. Tackiness additives are also beneficial.

(5) Standing rope applications. This category includes guy and pendant ropes for onshore use, and towing cables, cranes, derricks, and trawl warps for offshore applications. Corrosion due to prolonged contact in a corrosive environment is the primary consideration. Desirable lubricant qualities include high corrosion protection, long term stability over time and temperature, good adhesion, and resistance to wash-off, emulsification, and mechanical removal. The best lubricants are thixotropic oils similar to those required for heavy wear applications, except that a higher degree corrosion resistance additive should be provided.

(6) Lubrication of wire ropes in storage. Refer to EM 1110-2-3200,*Wire Rope Selection Criteria for Gate Operating Devices* (02 April 2004) for the storage requirements of wire rope. Wire ropes in long term storage need to be lubricated on a periodic basis.

16-6. Chain Lubrication.

a. Drive chains combine the flexibility of a belt drive with the positive action of a gear drive. Various designs are available the most common being link chain and roller chain. Link chain is the simplest and consists of links that are rough cast, forged, or stamped. These chains are seldom enclosed and therefore exposed to various environmental conditions. They are generally limited to low speed applications and are seldom lubricated. Roller chains (Figure 16-6) have several moving parts and, except for the self-lubricating type, require periodic lubrication. New roller chain design should be self-lubricated. This is discussed further in EM 1110-2-2610, *Mechanical and Electrical Design of Navigation Locks and Dams* (30 June 2013). The recommendation in EM 1110-2-2610 is to use stainless steel pins and aluminum bronze sidebars. However, many USACE sites have existing roller chain that must be maintained and lubricated. For existing roller chain, lubricants should be applied between the roller and links to ensure good penetration into the pins and inner bushing surfaces.

Figure 16-6. New Roller Chain Using Stainless Steel Pins and Aluminum Bronze Sidebars.

b. Lubricant-Related Wear and Failure.

(1) Like wire ropes, chains experience both internal and external wear. Internal wear generally occurs on the pins and adjacent bearing surface of the roller bushing, and at the link surfaces. Wear is attributed to friction between metal contacting surfaces. Use of improper lubricant, inadequate lubricant penetration into the pin and bushing clearances, poor lubricant retention, and inadequate or infrequent lubrication are the primary causes of premature wear. Poor chain designs, such as those that provide no grease fittings or other lubricating schemes, also contribute to premature wear.

(2) Corrosion damage is a serious problem and often occurs internally where it is difficult to detect after the chain is assembled and placed in service. Corrosion occurs when the unprotected chain is exposed to weather or corrosive environments such as prolonged submergence in water. Corrosion results in decreased tensile strength, decreased shock, or impact-load resistance, and loss of flexibility.

c. Lubricant Characteristics. The most important considerations in chain lubrication are boundary lubrication and corrosion. Chain life can be extended through the proper selection and application of lubricant for the operating conditions. An effective chain lubricant should possess a number of specific characteristics. It should:

- Have a viscosity that will enable it to penetrate into the link pins and bearings.
- Lubricate the external surfaces to reduce friction between the sliding link surfaces and chain sprockets.
- Form a seal to prevent moisture penetration.
- Protect the chain against corrosion.
- Be free of acids and alkalis.
- Resist washout.
- Have high film strength.
- Not be soluble in the medium surrounding it under actual operating conditions.
- Displace water.
- Not cake, gum, or ball up when contaminated with dust and dirt.
- Not thin and drip at the highest operating temperature.
- Not become brittle, peel, or chip at the lowest operating temperature.

d. Lubrication Problems. Most chains, such as those used on conveyors, transporters, and hoists, are accessible and easily lubricated while in service. Lubrication of these chains is generally accomplished through oil baths, brushing, or spray applications. Lubrication of tainter (radial) gate chains poses an especially difficult challenge. Chain design, construction, application, and installation often render them inaccessible. The operating constraints imposed on these gates include water flow regulation, changing water surface elevations, poor accessibility, and infrequent and minimal movement. These gates may remain in fixed positions for prolonged periods. The submerged portions of chains have a significantly greater potential

for rust damage due to exposure to corrosive water, lubricant washout, and moisture penetration into the link pins and bearings. Infrequent movement and inaccessibility adversely affect the frequency of lubrication.

e. Lubricants. Typical chain lubricants include light general purpose mineral oils, turbine oils, gear oils, penetrating fluids, and adhesives. Light oils may be adequate for continuous chains exposed to oil baths. Synthetic sprays employing solid lubricants such as graphite, MoS_2, and PTFE are also common. When manufacturer's data are not available, recommended lubricants are shown below. For heavily loaded chains, the following EP grades should be used:

- Low speed–0 to 3 m/s (0 to 10 ft/s):
  - below 100 °F (37.7 °C) ISO 100 (AGMA 3).
  - above 100 °F (37.7 °C) ISO 150 (AGMA 4).
- Medium speed—3 to 9 m/s (10 to 30 ft/s):
  - below 100 °F (37.7 °C) ISO 150 (AGMA 4).
  - above 100 °F (37.7 °C) ISO 220 (AGMA 5).

(1) Chain lubricants may require special formulation or incorporation of multiple lubricants to cope with severe operating conditions including submerged, wet, dusty, and gritty environments. When possible, the chain manufacturer should be consulted for lubricant recommendations. If the recommended lubricant is not available, a lubricant manufacturer can recommend a substitute lubricant for the application provided the operating conditions are accurately described. When necessary, an adhesive-type lubricant similar to that used for open gearing may be acceptable.

(2) Heavy roller chains such as those used in radial gate applications require heavier lubricants to ensure adequate protection over prolonged periods of submergence without benefit of periodic lubrication. Chain lubricants used in this application must be especially resistant against washout.

(3) New or rebuilt gate chains are usually lubricated during assembly, but periodic lubrication is required to protect against corrosion and abrasion and to ensure long service life. A properly applied lubricant will provide both internal lubrication and a durable external coating to prevent corrosion and penetration of dust and abrasives.

(4) The following example is provided to stress the complex nature of certain lubricant applications, such as heavily loaded roller chains. In a 1996 radial gate rehabilitation at Folsom Dam, a three-stage lubricant application was used during assembly of the new lift chains. The procedure was recommended by Lubrication Engineers, Inc., based on their experience with similar applications. The Folsom chains were not fitted with grease fittings so once reassembled, the pins and bushings could not be lubricated. An initial coat of open gear lubricant was applied to the pins and bushings. This coating provided primary protection for the internal parts of the chain, which would be inaccessible after the chain was placed in service. After assembly, the entire chain received a coat of wire rope lubricant. This is a penetrating fluid that will lubricate assembled areas of the chain that the final coat will not penetrate. The final coat consisted of open gear lubricant similar to initial coating except that the product contained a solvent for easier application, especially at low temperatures. After evaporation of the solvent, the remaining lubricant has characteristics similar to

the initial coating. The top coat must be reapplied as necessary to ensure lubrication and corrosion protection between the sliding links.

(5) Although the multistage lubricant application described above was conducted on new chain, it may also be possible to extend the service life of existing chains by using this procedure. However, since this work is labor-intensive and requires placing the affected gate out of service, the economics and logistics must be considered.

f. Lubricant Application. The need for lubrication will be evident by discoloration appearing as reddish-brown deposits. Often bluish metal discoloration can be detected. Chains can be lubricated by various methods including brush, oil can, spray, slinger, dip, pump, or oil mist. The method of application depends on operating conditions such as load, speed, and size, and also on whether the components are exposed or enclosed. Lubricant should be applied to the lower strand of the chain immediately before engaging the gear or sprocket. Centrifugal action will force the lubricant to the outer areas.

16-7. Trashrake Systems and Traveling Water Screens.

a. Gear Drives. The most common drive units are standard speed reducers using helical gears, although worm gears are also used. Lubrication requirements for these gear drives are similar to those discussed in the gear lubrication section above. If a worm gear reducer is used, ensure that the lubricant does not contain an EP additive as it can be detrimental to a bronze worm gear.

b. Couplings. All types may be used. The lubrication requirements are similar to those discussed above.

c. Chains. Roller chains are the most common type used. The lubrication should be selected according to the requirements outlined in the section on chain lubrication above.

d. Cable or Wire Rope. The lubrication should be selected according to the requirements outlined in the section on wire rope lubrication above.

e. Hydraulic Operated Trashrakes. These trashrakes use a hydraulically operated boom. Bureau of Reclamation projects specify a food grade polymer oil complying with 21 CFR 178.3570 and USDA H1 authorization for food grade quality. The oil must also comply with ASTM D697 for hydraulic pump wear analysis. See Chapter 13 for specific requirements on Environmentally Acceptable lubricants (EA lubricants). EA lubricants are recommended for these applications if possible. Chapter 10 discusses some EA hydraulic oils.

f. Bearings. Trashrake conveyor belts or systems are commonly provided with rolling-contact bearings, either in the ends of the rollers or in pillow block bearings. These bearings are normally manually lubricated with NLGI 2 lithium-based grease.

16-8. Gates and Valves. Various gates and valves and essential lubricated components for each are listed and discussed below. The lubricated components discussed below also apply to unlisted gates and valves that incorporate these same components. Hydraulic fluids for operating systems are also discussed. The discussion of gate trunnions provides more detail as it

encompasses "lessons learned" from the investigation of a 1995 tainter gate failure at Folsom Dam. Appendix C to this manual includes USACE ECB 2006-11, which also discusses this failure. Recommended frequencies of lubrication are noted, but frequency should be based on historical data. Each component has its own effect on lubricants, and each facility should pattern its frequency of lubrication around its own particular needs. For example, lock culvert valves such as tainter gates are lubricated more frequently than tainter gates on spillways of water storage dams because culvert valves are operated much more often. The manufacturer's schedule should be followed until operating experience indicates otherwise. Grease for the slow-moving, highly loaded, bronze bushings such as those found on wicket gates, radial gates, and butterfly valves should be adhesive, water resistant, able to withstand high bearing pressures, and of a consistency that can be pumped at the lowest temperature encountered. Gates and valves, and their lubricated components (shown in italics), are:

- Tainter (radial) gates and reverse tainter gates. *Trunnions.*
- Other lubricated hinged gates. *Same lubricant as trunnions*.
- Bonneted gates, including outlet, ring-follower, and jet-flow gates. *Seats, threaded gate stems, gears for electrically and manually operated lifts.*
- Unbonneted slide gates. *Threaded gate stems, gears for electrically and manually operated lifts.*
- Roller-mounted gates, including stoney. *Roller trains and roller assemblies.*
- Ring-seal and paradox gates. *Roller trains and roller assemblies*.
- Wheel-mounted, vertical lift gates. *Wheel bearings*.
- Roller gates. *See chains. (These are most commonly operated with roller chain.)*
- Butterfly, sphere, plug valves. *Trunnions, gears for electrically and manually operated lifts*.
- Fixed cone valves. *Threaded drive screws, gears for electrically and manually operated lifts*.

a. Trunnions. Grease for trunnions should be selected for high load, low speed applications (boundary lubrication). The designer should reference ECB 2006-11, "Tainter Gate Trunnion Lubrication." Other considerations include frequency of operation, trunnion friction, temperature range, condition of bearing surfaces (rust, scuffing, etc.), whether the trunnions are exposed to sunlight or submerged, and contaminants such as moisture and debris. During the warranty period, specific greases are recommended by equipment manufacturers and should be used. If another grease is desired, the testing of a number of greases by a qualified lubricant expert to the exacting conditions of the application will determine the optimal grease. However, testing can be expensive and is not necessary unless highly unusual conditions exist. Suitable greases can be identified by finding out what works at other facilities that use the same equipment under similar conditions. Also, lubricant suppliers are readily available to recommend a grease, but they should be advised of all conditions for the particular application. Another option for the designer is to consider a self-lubricated trunnion bearing. See Chapter 12 for further discussion on this issue.

(1) Recommended greases and desirable properties from field experience. A spillway tainter gate failure at Folsom Dam in 1995 led to an investigation and testing of greases for trunnions. Table 16-3 lists desirable grease properties for the Folsom Dam trunnion bearings. Details of the investigation may be found in the report "*Folsom Dam Spillway Gate 3 Failure Investigation Trunnion Fixture Test,*" prepared by the U.S. Bureau of Reclamation Mid-Pacific Regional Office, July 1997. The properties compiled for the trunnions at Folsom Dam are applicable to trunnions in general. Table 16-3 shows the purpose of the grease property, base oils for grease, grease gelling (thickening) agents, additives, and ASTM grease test and properties. Further explanation of desirable trunnion grease properties are:

(a) Lubricity. Low breakaway (static) and running (kinetic) friction and no stick-slip are necessary for smooth gate and valve operation. The grease should possess good lubricity for low startup and running torque.

(b) Rust prevention. Rust on a trunnion pin thickens with time. This thickening takes up bearing clearance, soaks up the oil from grease, prevents film formation, causes high friction, and abrades bronze bushing material. Since rust takes up about eight times the volume of the iron from which it is formed, it is very important for trunnion pin grease to inhibit rust.

(c) Low corrosion of leaded bronze. Grease degradation products such as organic acids and chemically active sulfur and chlorine compounds used in gear oils can corrode leaded bronze bushings. Some light tarnishing is acceptable, but excessive corrosion is indicated by stains, black streaks, pits, and formation of green copper sulfate from sulfuric acid.

(d) Scuff prevention. Scuffing causes serious damage to surfaces in the form of metal transfer, melting, and tearing. Antiscuffing additives are activated by the heat of friction and form a surface film. If used in a trunnion grease, sulfur concentrations must be low to prevent chemical corrosion of sliding surfaces.

(e) Washout resistance. Especially when trunnions are submerged, the grease should be resistant to water washout.

(f) Pumpability. Grease should be non-hardening and flow into the load-bearing clearances of the trunnion bearings. A grease should easily pump and flow through piping and tubing. The grease should retain its NLGI grade over long periods during any temperature fluctuations.

(g) Adherence to metal. Tackiness agents provide this characteristic

(h) Oxidation resistance. Grease oxidation will occur over long periods at dam environment temperatures. Symptoms of oxidation are discoloration, hardening, and bronze corrosion. An effective oxidation inhibitor will increase grease longevity.

(i) Low oil separation. Oil separation or "bleeding" from the gelling agent should be minimized during inactivity and storage. Excessive bleeding hardens the remaining grease because of the decreased oil-to-thickener ratio. However, some separation — especially under pressure — is desired so the oil and its additives can flow into the molecular-scale clearances between pin and bushing for boundary lubrication.

Table 16-3. Desirable Grease Properties for the Folsom Dam Trunnion Bearings.

Purpose of Grease Property(s)	Examples of Composition						ASTM Test	
			Additives					
	Base Oil	Gelling Agent	Type	%	Chemical	Number	Desired Result	Maximum
Lubricity, that is, low static and kinetic friction for bronze on steel	Mineral or synthetic including polyol ester, jojoba oil, vegetable oils	Lithium or calcium soaps, or polyurea	Lubricity (reduction of friction)	2.5	Fatty materials, oleic acid, oleyl amine, jojoba oil	D99-95 Pin-on disk apparatus applicable	Coefficient of static friction, fs, (breakaway), 0.08, (b) Coefficient of kinetic friction at 5.1 mm/min (0.2-inch/min, F_k, 0.10)	fs,0.10, (b) F_k, 0.12
Prevent rusting of steel	Mineral or synthetic	Calcium, lithium, or aluminum complex soaps, or calcium sulfonates, or polyurea	Rust inhibitors, calcium sulfonate	0.2 to 3	Metal sulfonates, amines	D1743-94	Pass–no rusting of steel after 48 hours in aerated water	Pass
Low corrosion of leaded bronze (Cu 83, Sn 8, Pb 8%)	Mineral or synthetic	Lithium or calcium sulfonate and soaps, or polyurea	Corrosion inhibitors, metal deactivators	0.2 to 3	Metal sulfonates phosphites	D4048 (copper strip)	1 to 1B	4C
Prevent scuffing of steel vs. bronze	Mineral or synthetic	Lithium or calcium soaps, or polyurea	Antiscuff (EP)	1 to 2	Sulfur and phosphorous compounds, sulfurized fats, ZDDP	D99-95, bronze pin vs. steel disk	No scuffing, that is, transfer of bronze to steel. “EP” film formation	No scuffing
Resists washout by water	Mineral or synthetic	Polyurea or calcium hydroxystearate	—	—	—	D1264-93	0 washout	1.9%
Does not “harden” in pipes	Mineral or synthetic	Lithium or calcium soaps or polyurea	—	—	—	—	No change in consistency with aging	No change
Easy to pump and distribute through tubing and grooves in bronze bushing	Mineral or synthetic, ISO 100 to 150	Lithium or calcium soaps or polyurea	—	—	—	a. D217	a. NLGI 1 or 1.5, cone penetration 340 to 275,	NLGI 2
Adherence to metal, and retention in areas of real contact of trunnion	Mineral or synthetic	Lithium or calcium soaps or polyurea	Tackiness agent		Polymers, iso-butylene or polyethelene	None	Slightly tacky between metals	Slightly tacky
Long life, oxidation stable	Mineral or synthetic	Polyurea	Oxidation inhibitors		Amines, phenols, sulfur compounds	D942-90	Pass, also no acid forma-tion, odor, or discoloration	Pass
Low bleeding, oil does not separate from grease excessively	Mineral or synthetic	Lithium or calcium soaps or polyurea	High viscosity base oil	—	—	D1742-94 and Federal Test	Limited “bleeding” of oil, less than 0.1%	1.6% in 24 hours, 3% in 48 hours

(a) Applied to low carbon (SAE1045) steel pin 812.7 mm (32-in.) diam., rotating in trunnion bronze bushing, at 5.1 mm/min (0.2 in/min) and 816,461 kg (1.8 million lb) load. dam site environment - temperature range 30 to 125 °F (–11 to 51.6 °C), wet, long periods of no sliding under load.

(b) Only known bench test with Pin (bronze pad)-on-Disk (1045 steel) tribometer, at Herguth Laboratories, P.O. Box B, Vallejo, CA 94590 Douglas Godfrey, *Wear Analysis*

Source: “Lubricating Grease Guide,” NLGI t4h Ed., 1996

(j) Solid lubricants. The Folsom Dam tainter gate failure investigation recommended that molybdenum disulfide (MoS_2) and polytetrafluoroethylene (PFTE) not be used in greases for the tainter gate trunnion bearings at Folsom Dam. The lowest friction coefficients were achieved with greases that did not have these solid additives. Furthermore, addition of MoS_2 to grease is shown to reduce their ability to prevent corrosion. Although not a factor in the Folsom Dam tainter gate failure, graphite is not recommended as an additive for lubricating trunnions because it has been found to promote corrosion.

(2) Load. Tainter gate trunnions operate under high loads and extremely low speeds. The load on the trunnion is the water-level pressure plus a portion of the gate weight. Typical design loading on tainter gate trunnions is 2000 to 3000 psi (137.9 to 206.8 bar) for leaded tin bronze bearing surfaces and 4000 to 5000 psi (275.8 to 344.7 bar) for aluminum bronze.

(3) Speed. Relatively speaking, a trunnion pin rotates at extremely low speeds. The tainter gate trunnion pins at Folsom Dam rotate at 0.002 rpm. Trunnions in reverse tainter gates at locks have faster rotational speeds than those in dam gates.

(4) Friction. Trunnion friction increases during operation as the bearing rotates. Friction increase is caused by lubricant thinning at the loaded bearing surfaces. Trunnion friction is especially critical at high water levels and low gate openings, but lessens as the gate is opened and the reservoir level drops. Typical design coefficient of friction for grease-lubricated trunnion bearings is 0.3 (this is also noted in EM 1110-2-2610, *Mechanical and Electrical Design of Navigation Locks and Dams* (30 June 2013). A bronze bearing may initially have a lower coefficient of friction. There was no trunnion coefficient of friction calculated into the design of the failed Folsom gate, but the friction coefficient rose to 0.3 over a long period of time, perhaps the entire life of the gate, due to rust on the trunnion pin. When new equipment is purchased or existing bushings are replaced, self-lubricated bushings can be considered. There is no USACE mandate or requirement to use these materials, however. The trunnion bushings for the failed gate at Folsom Dam were replaced with self-lubricated bushings. Typical design coefficient for self-lubricated trunnion bushings is 0.15, which translates into less structural support (to keep gate arms from buckling under friction) than for grease-lubricated bearings. See Chapter 12 for more information about self-lubricated bushings. Self-lubricated bearings are also discussed in EM 1110-2-2610, *Mechanical and Electrical Design of Navigation Locks and Dams* (30 June 2013). EM 1110-2-2610 requires using 0.3 for the friction design coefficient on tainter gate trunnion bearings regardless of the material used.

(5) Lubrication regime. Two grease lubrication regimes are applicable to trunnions operating under high load, low speed conditions. They are hydrostatic lubrication and boundary lubrication.

(a) Hydrostatic lubrication. Hydrostatic lubrication may be used when bearing surface velocities are extremely slow or zero. Under hydrostatic lubrication, a pressurized grease physically separates the bearing surfaces to produce a thick film. Trunnion friction can be reduced by about 40% if a grease film can be maintained during operation by an automatic greasing system.

(b) Boundary lubrication. Boundary lubrication occurs when bearing surfaces are separated by a lubricant film of molecular thickness and there is momentary dry contact between

asperities (microscopic peaks). Friction is caused by contact of bushing and pin surface asperities. Since viscosity depends on film thickness, when boundary lubrication occurs, friction is not affected by the grease viscosity and can only be reduced through additives.

(6) Grease selection based on boundary lubrication. Grease should be selected based on its performance specifically for boundary lubrication, whether for manual lubrication or automatic greasing system. Manual hydrostatic lubrication on stationary equipment under load reduces trunnion friction for the next operation, but as the pin rotates, the lubricant film thins until pure boundary lubrication results. With rust on the trunnion pins, the preferred method of trunnion lubrication is hydrostatic lubrication during gate operation using an automatic greasing system. However, automatic systems are subject to occasional breakdown, which could produce catastrophic results.

(7) Frequency of lubrication. Frequencies for lubricating gate and culvert valve trunnions at locks and dams vary across USACE. These vary from weekly to twice a year, indicating that there is no set frequency of lubrication. Aside from recommendations for new equipment, lubrication frequencies become individualized based on the factors and conditions noted above and operating experience. The ASCE Water Control Gates manual provides some recommendations for frequency of operation and lubrication. Frequency of lubrication depends on many factors, such as frequency of operation, trunnion friction, temperature, condition of bearing surfaces (rust, pitting, etc.), whether the equipment is submerged, replacement of grease lost to leakage or oxidation, and the need to flush out moisture or other contaminants. An example of two different lubrication frequencies based on factors and gate conditions includes:

- The Folsom Dam spillway tainter gate investigation suggests that, in general, if the allowable gate trunnion friction in the design is at least 0.5 and the bearing is well protected from its given environment, the Bureau of Reclamation standard of lubricating tainter gates twice a year is adequate.
- The same Folsom investigation found there was no allowable trunnion friction in its gate design. The trunnion pins were rusted, scuffed, and had inadequate protection from rain and spray. Based on these factors, it was concluded that a reasonable lubrication schedule would be to grease once a month when the lake level is below the gates; grease once a week when the lake level is above the gate sill; and employ automatic greasing while the gate is in motion. Frequent applications can remove moisture from trunnion surfaces and decelerate rust progress.

(8) General suggestions for tainter gates. Some of the recommendations made for Folsom Dam, such as the automatic greasing system and the lubricant type, are made partly due to existing rust of the trunnion pins and bushings. Other tainter gates may have different conditions such as local climate, frequency of gate operation, the designed allowable trunnion friction, and the lubrication system. The following procedures are suggested to determine the requirements for tainter gate trunnions at other locations.

(a) If exposed to water, air, and abrasive dust and debris, install weather protection seals on the edges of the trunnions to protect the bearing. Seals will protect against rusting of the pin while protecting the grease from oxidation and contamination.

(b) Determine the allowable trunnion friction. An allowable friction coefficient below 0.3 would be considered low.

(c) Carefully review the design of the trunnion assembly and lubrication system.

(d) Review the frequency of gate operations.

(e) Inspect the trunnions using some of the techniques listed below to determine the presence of rust and to estimate the existing trunnion friction. (These techniques have been established as a result of the investigation. Their effectiveness or feasibility has not been extensively determined and may depend on local conditions.) If corrosion is suspected, determine trunnion friction. Friction coefficients above design value may require a change of lubricants and/or lubrication frequency. Techniques are:

- Send used grease that is pumped out of the trunnions to a laboratory to test for contaminants such as rust.
- Measure the gate's hoist motor current as an indication of possible increased trunnion friction.
- Attach strain gauges to the gate arms to measure induced stresses caused by trunnion friction.
- Attach a laser and target to the gate structure to measure deflections caused by trunnion friction.
- Fabricate probes that can access the trunnion pin through the lubrication ports to determine the presence of rust.
- Measure hoist rope tension with tensiometer to estimate trunnion friction. Subtract allowance for side seal friction.

(f) Review the type of lubricant in use. Consider the lubricant specification recommended for the Folsom Dam trunnions (reference Table 16-3).

(g) Rotate trunnion pins 180 degrees. Loading is typically on one side of the pin, and the pin will corrode first on the side with the thinnest lubricant film.

(h) If pins are rusted, use new steel pin, because previously rusted steel is susceptible to rapid rusting.

b. Seats for Bonneted Gates. With design loading on the bronze sliding surfaces of these gates at 3000 to 4000 psi (206.8 to 275.8 bar), seats are typically lubricated with a multipurpose lithium, lithium complex, or lithium 12 hydroxystearate-thickened grease with EP additives. The grease must be suitable for the temperature range intended. Desired grease properties are good water washout resistance, copper alloy corrosion protection, and low startup/running torque. Recommended greasing frequency is every 6 months, however, but chattering or jerking during operation is a sign of inadequate lubrication and indicates the need for more frequent lubrication. Greases recommended by gate manufacturers are usually NLGI Grade 2. However, it has been

noted that cold seasonal temperatures may dictate a lower NLGI grade for better flow through piping to the seats.

c. Threaded Gate Stems. The same multipurpose EP greases recommended by gate manufacturers for seats are recommended for stems. The grease must be suitable for the temperature range intended. Good water resistance and low startup/running torque are also desired grease properties for stems. Cold seasonal temperatures may necessitate a lower NLGI grade if the grease accumulates excessively at the lift nut during operation due to low temperature. Keeping threaded stems clean and greased is critical. When excess dried grease or other foreign material is carried into the threads of the lift nut, extremely hard operation will result. If the foreign material is not cleaned from interior threads, seizure can result. Moreover, if the foreign material is abrasive and the stem is coated with this grit, frequent use of the gate will wear the threads in the thrust nut creating a potentially dangerous situation. An excessively worn thrust nut may not support the weight of the gate and may cause it to fall. Use of pipe covers will protect stems above the deck. Plastic stem covers will allow visual inspection. Recommended cleaning and greasing frequency is at least every 6 months or 100 cycles, whichever occurs first, and more often if the grease becomes contaminated with dirt.

d. Threaded Drive Screws. The lubricant should have good water-separating characteristics and must be suitable for the temperature range intended. It should have extreme pressure characteristics and low startup/running torque for quick startup and smooth operation. The same multipurpose EP greases used for threaded gate stems can be used on drive screws.

e. Roller Trains and Roller Assemblies for Roller-Mounted Gates. When chains are part of roller assemblies, they should be lubricated according to the requirements discussed below for chains. Grease for roller trains should contain an EP additive and generally be NLGI Grade 2. It should be formulated for rust and corrosion protection and be resistant to water washout. It should be suitable for the temperature range intended and for the shock loading of wave action. Frequency of lubrication depends on factors such as frequency of operation and accessibility, but roller trains should be lubricated a minimum of twice a year. When possible, the equipment manufacturer should be consulted for lubricant and frequency recommendations.

f. Wheel Bearings. Grease should be suitable for boundary lubrication of a high load, low speed journal bearing and contain EP additives. It should be noncorrosive to steel and resistant to water washout conditions. It must be suitable for the temperature range intended. The grease should conform to the recommendations of the bearing manufacturer. Bearings should be lubricated at least once a year. When this is not possible they should be lubricated whenever accessible.

g. Grease-Lubricated Gears for Electrically and Manually Operated Lifts.

(1) Grease for the main gearboxes of operating lifts should contain an EP additive and be suitable for the temperature range intended. It should be water- and heat-resistant, and be slightly fluid (approximating NLGI Grade 1 or 0). It should not be corrosive to steel gears, ball, or roller bearings, and should not create more than 8% swell in gaskets. Its dropping point should be above 316 °F (158 °C) for temperature ranges of –20 °F to 150 °F (–29 °C to 66 °C). It should not contain any grit, abrasive, or fillers.

(2) Frequency of lubrication varies among manufacturers. One lift manufacturer recommends pressure greasing through fittings after 100 cycles or every 6 months, whichever comes first. The frequency of inspections and/or lubrication should be based on historical data. The manufacturer's schedule should be followed unless operating experience indicates otherwise. Grease should be inspected at least every 18 months. It should contain no dirt, water, or other foreign matter. Should dirt, water, or foreign matter be found, the units should be flushed with a noncorrosive commercial degreaser/cleaner that does not affect seal materials such as Buna-N or Viton. All bearings, bearing balls, gears, and other close-tolerance parts that rotate with respect to each other should be recoated by hand with fresh grease. The operator should then be repacked with fresh grease. Different lubricants should not be added unless they are based on the same soap (calcium, lithium, etc.) as the existing lubricant and approval has been given by the lubricant manufacturer.

h. Hydraulic Fluids for Operating Systems. An oil with a high viscosity index should be selected to minimize the change in pipe friction between winter and summer months. The oil selected must have a viscosity range suitable for the system components and their expected operating temperature and pressure ranges. Generally, the maximum viscosity range is between 4000 SUS at startup and 70 SUS at maximum operating temperature. However, this range will vary between manufacturers and types of equipment. Hydraulic systems containing large quantities of fluid should include R&O inhibitors. Consideration should also be given to biobased fluids composed of vegetable-base oils with synthetic additives. These fluids should be used with caution to ensure that they are compatible with the components used in the hydraulic system. A more detailed discussion of hydraulic fluids properties can be found in Chapter 10 of this manual.

16-9. Navigation Lock Gates, Culvert Valves, and Dam Gates. Corps of Engineers navigation facilities use many types of lock gates, including miter, sector, vertical lift, and submergible tainter gates. The machinery required to operate these gates consists of speed reducers, gear couplings, bearings, open gearing, wire ropes, and chains. Most of this equipment is heavily loaded and operates at low speeds. Consequently, hydrodynamic lubrication cannot be established and boundary lubricating conditions predominate. The general lubricating requirements for this equipment have already been discussed. The following discussion is limited to the lubricating requirements specific to the lock gate noted. Refer to Section 16-8 (Gates and Valves) for lubrication requirements for culvert valves and dam gate components.

a. Speed Reducers. Chapter 14 also provides some specific discussion of gearboxes. Speed reducers or gearboxes are usually worm, helical, or herringbone-type gear trains in accordance with the applicable AGMA standards. Integral bearings are usually antifriction type. The intermittent and infrequent use of machinery on navigation structures can also contribute to corrosion on the interior of gear reducers (e.g., Figure 16-7). Most of these gear reducers have breathers that are open to the atmosphere and rely on splash lubrication. Long periods of non-use allow any protective film of lubrication to evaporate. Moisture in the air within the gearbox can condense and cause rust and corrosion to form.

Figure 16-7. Gear Reducer for Miter Gate Drive.

(1) As the oil in a gear reducer heats and cools, it expands and contracts, allowing moist outside air into the gear reducer through the breather. To limit the entrance of moisture into gear reducers, the use of an appropriately sized oil bath or disposable desiccant breather is necessary. With this type of breather, not only must they be designed and installed correctly, they must also be replaced when the desiccant is saturated. Gear reducer outdoor exposure to humidity and sunlight will draw water into the gear reducer oil. Fabricated protective covers or roofs are justified to limit the direct exposure to sunlight and the elements.

(2) Lubrication requirements for gear reducers are prescribed by the equipment manufacturers, based on the operating characteristics and ambient conditions under which the equipment will operate. Often the nameplate data on the equipment will indicate the type of lubricant required. If the manufacturer is unknown or no longer in business, a lubricant supplier should be consulted for recommendations. Means of lubricating gear reducers include splash lubrication, pressure lubrication, gravity drip, spray systems, and idler immersion systems. Splash lubrication is probably most common at USACE sites.

(3) A common mistake has been to use the wrong weight of oil in gear reducers. For example, worm gear reducers typically require oil that is approximately twice as heavy as that required for parallel shaft gear reducers. This is due to the nature of the sliding action between the worm gear and the worm wheel. It is not unusual to find that the same weight oil that is appropriate for the parallel shaft gear reducers used in the worm gear reducers. This will lead to accelerated wear.

(4) Oxidation stability of the lubricant is critical for gear reducers. Lubricants with low values of oxidation stability will oxide rapidly in the presence of water at high temperatures. When oil oxidizes, it may result in sludge accumulation in the gear reducer. The sludge may interfere with the cooling and lubrication. The oxidized oil will also cause corrosion. Oxidation stability is discussed further below.

(5) Gear oil must be suitable for the expected ambient temperatures. Where ambient temperature ranges will exceed the oil producer's recommendations, a thermostatically controlled heater should be provided in the reducer case. The surface area of the heater should be as large as possible to prevent charring of the oil. The density of heating elements should not exceed 10 watts per square inch. See EM 1110-2-2610, *Mechanical and Electrical Design of Navigation Locks and*

Dams (30 June 2013) for further information. If possible, insulate the reducer case to minimize heat loss. If heaters are impractical, synthetic gear oils should be considered. A number of locks are using synthetic oils in gearboxes. One reason given is that in cold weather, heaters have scorched petroleum oils, requiring additional maintenance. Synthetic oils eliminate the need for heaters. A synthetic gear lubricant with a –40 °F (–40 °C) pour point is recommended if acceptable to the reducer manufacturer. Lubricant selection should be based on published manufacturer's data for the required application and operating conditions.

b. Couplings. Flexible couplings are usually the gear type. The lubrication requirements for these couplings were discussed above.

c. Bearings.

(1) Antifriction bearings should be selected in accordance with manufacturer's published catalog ratings. Life expectancy should be based on 10,000 hours B-10 life with loads assumed equal to 75% of maximum.

(2) Bronze sleeve bearings should have allowable unit bearing pressures not exceeding the following measures:

- Sheave bushings, slow speed, 3500 psi (241 bar).
- Main pinion shaft bearings and other slow-moving shafts, hardened steel on bronze, 1000 psi (68.9 bar).
- Bearings moving at ordinary speeds, steel, or bronze, 750 psi (51.71 bar).

d. Open Gearing. See Chapter 14.

e. Hydraulic Fluid. A petroleum oil with a high viscosity index should be selected to minimize the change in pipe friction between winter and summer months. The oil selected must have a viscosity range suitable for the system components and their expected operating temperature range. Generally, the maximum viscosity range is between 4000 SUS at startup and 70 SUS at maximum operating temperature. However, this range will vary among manufacturers and types of equipment. Hydraulic systems containing large quantities of fluid should include R&O inhibitors. Consideration should also be given to biodegradable fluids composed of vegetable-base oils with synthetic additives. These fluids should be used with caution to ensure that they are compatible with the components used in the hydraulic system. Refer to Chapter 10 for a more detailed discussion of desirable properties for hydraulic fluids commonly used at locks and dams.

f. Miter Gates. There are various types of operating linkages for miter gates. Generally, these gates are operated through electric motors, enclosed speed reducers, a bull gear, sector arm, and spring strut. Alternatively, the gates may be hydraulically operated. Miter gate gudgeon pins and pintles are grease-lubricated with graphite-based grease or lubricated with the same grease used on the pintles, depending on type of strut.

g. Sector Gates. The operating machinery for sector gates is similar to that used in miter gate and may consist of a hydraulic motor, or an electric motor, a herringbone gear speed

reducer, and a specially designed angle drive gear unit. In some applications, a system consisting of a steel wire rope and drum arrangement replaces the rack and pinion assembly, and is used to pull the gates in and out of their recesses. Sector gates gudgeon pins and pintles are lubricated with the same grease used on miter gate gudgeon pins and pintles.

h. Vertical Lift Gates. The hoisting equipment for vertical lift gates consists of a gear-driven rope drum. The actual gear drive depends on the gate use. Emergency gates use two-stage open-spur gearing, a herringbone or helical gear speed reducer, and an electric motor. The downstream gate is wheel-mounted. These wheels may be provided with self-lubricating spherical bushings. Tide gate drums are operated by a pinion gear driven by a triple-reduction enclosed gear unit. Vertical gates are also equipped with a hydraulically operated emergency lowering mechanism. The hydraulic fluid is used to absorb heat so a heat exchanger is required to ensure that the oil temperature does not exceed 120 °F (49 °C). Wire ropes are usually 6 x 37, preformed, lang lay, independent wire rope core, 18-8 chrome-nickel corrosion-resistant steel.

i. Submergible Tainter Gates. Submergible tainter gates are operated by two synchronized hoist units consisting of rope drum, open gear set, speed reducer, and hoist motor. Due to continuous submergence, stainless steel wire ropes are commonly used. Refer to Section 16-8 (Gates and Valves) for trunnion lubrication requirements.

16-10. Transformer and Circuit Breaker Insulating Oil Degradation.

a. The consequences of oil degradation in a transformer can be even more serious than with other equipment. Combustible gases may form as the transformer develops faults. Some gases are present in a dissolved state while others are found in the free space of the transformer. The type and concentration of gases and the ratio in which they are present are commonly used to assess the serviceable condition of transformers. Under the right conditions, these gases may explode, causing significant damage and injury to personnel. The testing of transformer oils and assessment of transformer serviceable conditions has become a specialty. The Bureau of Reclamation has published manuals that provide detailed procedures and criteria for testing insulating oils. The reader should refer to Reclamation FIST publication Volume 3-30, "Transformer Maintenance, October 2000" and Volume 3-31, "Transformer Diagnostics, June 2003," for detailed information on transformer and circuit breaker oil maintenance and testing. For information on monitoring, testing, and assessment of transformer serviceability, refer to Institute of Electrical and Electronics Engineers (IEEE) Standard C57.104-2008, "Guide for the Interpretation of Gases in Oil-Immersed Transformers."

b. Transformer and circuit breaker insulating oils suffer degradation similar to that of lubricating oil and hydraulic fluid including as oxidation, sludge formation, additive depletion, and moisture contamination. Sludge can significantly affect the flow of heat from the oil to the coolant and from the core and coils to the cooling coil. If these conditions are prolonged, the excessive temperature and heat can damage the transformer insulation and eventually cause short circuits and breakdown of the transformer. Moisture can be present in three forms: dissolved, emulsified, or free state. Emulsified water is especially harmful since it has significant influence in reducing the dielectric strength of the oil. Another form of contamination is the presence of dissolved nitrogen, which can cause problems due to corona discharge. Circuit breakers may have all the above problems plus the formation of carbon particles, which can cause short circuits.

THIS PAGE INTENTIONALLY LEFT BLANK

CHAPTER 17

Operation, Maintenance, and Selection Considerations

17-1. Introduction. This chapter discusses the maintenance aspects of lubrication, including detailed discussions of maintenance scheduling; relative cost of lubricants; essential oil properties that must be retained to ensure adequate lubrication of equipment; degradation of lubricating oils, hydraulic fluids, and insulating transformer oils; particulate, water, and biological contamination; monitoring programs, including trend monitoring and oil testing; storage and handling; and environmental impacts.

17-2. Maintenance Schedules.

a. Modern maintenance schedules are computer-generated and are frequently referred to as Computer Maintenance Management Systems (CMMSs). The Facility Equipment Maintenance System (FEMS) is a CMMS that has been implemented at many Corps of Engineers facilities. These systems are essential in organizing, planning, and executing required maintenance activities for complex hydropower, pumping, and navigation facilities. A complete discussion of CMMS is beyond the scope of this manual. Some Corps of Engineers and Bureau of Reclamation facilities recognize the value of CMMS and are currently using these systems to document operation and maintenance activities. The following discussion summarizes some key concepts of CMMS.

b. The primary goals of a CMMS include scheduling resources optimizing resource availability and reducing the cost of production, labor, materials, and tools. These goals are accomplished by tracking equipment, parts, repairs, and maintenance schedules.

c. The most effective CMMS are integrated with a predictive maintenance program (PdM). This type of program should not be confused with preventive maintenance (PM), which schedules maintenance and/or replacement of parts and equipment based on manufacturer's suggestions. A PM program relies on established service intervals without regard to the actual operating conditions of the equipment. This type of program is very expensive and often results in excess downtime and premature replacement of equipment.

d. While a PM program relies on elapsed time, a PdM program relies on condition monitoring of machines to help determine when maintenance or replacement is necessary. Condition monitoring involves the continuous monitoring and recording of vital characteristics that are known to be indicative of the machine's condition. The most commonly measured characteristic is vibration, but other useful tests include lubricant analysis, thermography, and ultrasonic measurements. The desired tests are conducted on a periodic basis. Each new measurement is compared with previous data to determine if a trend is developing. This type of analysis is commonly referred to as trend analysis or trending, and is used to help predict failure of a particular machine component and to schedule maintenance and order parts. Trending data can be collected for a wide range of equipment, including pumps, turbines, motors, generators, gearboxes, fans, compressors, etc. The obvious advantage of condition monitoring is that failure can often be predicted, repairs planned, and downtime and costs reduced.

e. All USACE sites should provide a detailed and comprehensive lubrication schedule for their machinery and equipment. This should include a detailed plan for lubricant replacement on a periodic basis. It is important that the lubricants on both hydraulic drives and mechanical drives and hydroturbines have a long service life and durability and not degrade quickly. Maintenance staffing at navigation facilities vary greatly. Operation and Maintenance work is constantly being delayed or cut back due to fiscal constraints. Changing oil in a gearbox or hydraulic system and replacing grease on open gears is a time consuming and costly undertaking. It is important to standardize lubrication requirements to the greatest extent possible. No standardized maintenance procedures are used throughout the Corps of Engineers. The wide variation in the types of machinery make standardized lubrication schedules and practices nearly impossible. The lack of standardization results in a number of lock and dam sites using trial and error for selection of lubricants.

f. The Bureau of Reclamation FIST 4-1A and the ASCE Water Control Gates – Guidelines for Inspection and Evaluation, both provide detailed recommendations for inspection and maintenance of a variety of mechanical equipment. Appendix F to this manual includes Bureau of Reclamation FIST 4-1A.

17-3. Information Sources for Lubricants. There are many valuable information resources on the subject of lubrication.

a. O&M Manuals. The primary information sources are the manufacturer's installation, operation, and maintenance manuals. The information contained in these manuals applies specifically to the equipment requiring servicing.

b. Industry Standards. Industry standards organizations such as ANSI, ASTM, AGMA, and IEEE publish standard specifications for lubricants and lubricating standards for various types of equipment. ILSAC and API are other professional societies that classify oil. Reference: http://www.api.org/certification-programs/engine-oil-diesel-exhaust-fluid/service-categories.aspx.

c. Journals. Engineering and trade publications and journals such as Lubrication, Lubrication Engineering, and Wear specialize in the area of lubrication or tribology. Articles featured in these publications are generally technical in nature and describe the results of current research. Occasionally research results are translated into practical information that can be readily applied.

d. General Trade Publications. Magazines such as Power, Power Engineering, Hydraulics and Pneumatics, Machine Design, Pump, and Systems, and Plant Engineering Magazine frequently contain practical articles pertaining to lubrication of bearings, gears, and other plant equipment. Noria publishes a multitude of manuals and guidelines on equipment lubrication. Of particular interest is Plant Engineering's "Lubrication Guide." This guide is updated yearly. This guide cross-references lubricants by application and company producing the product. Chart users should note that Plant Engineering Magazine product names are provided by the manufacturers, and that publishing of the data does not reflect the quality of the lubricant, imply the performance expected under particular operating conditions, or serve as an endorsement. Fluid products in each category are listed within viscosity ranges. Lubricant categories include:

- General purpose lubricants.
- Antiwear hydraulic oil.
- Spindle oil.
- Way oil.
- Extreme pressure gear oil.
- Worm gear oil.

e. The chart for identifies available products from 10 lubricant companies in six categories. Fluid products in each category are listed within viscosity ranges.

f. Hydropower Industry Publications. Hydro Review and Water Power and Dam Construction are widely known publications throughout the hydropower industry. Hydro Review tends to be more research oriented and, therefore, more technical. Water Power and Dam Construction includes technical and practical information. Occasionally, lubrication-related articles are published.

g. Lubricant Producers. Lubricant producers are probably the most valuable source for information and should be consulted for specific application situations, surveys, or questions.

h. Internet. The Internet offers access to a large amount of information, including lubrication theory, product data, and application information. Since the credentials of individuals publishing information through the Internet are more difficult to ascertain, caution should be used when evaluating information from unverified sites or forums. One useful site is http://www.tribology-abc.com/. This is an online machinery and lubrication and bearing database and unit conversion calculator. Another is http://www.machinerylubrication.com/, a monthly online magazine with a variety of lubrication-related articles. Yet another is available from the STLE. STLE provides detailed information on lubrication engineering: http://www.stle.org/.

i. Specifications. Various lubrication-related specifications are available on the Whole Building Design Guide at http://www.wbdg.org/. The list of ASTM, AGMA, ANSI, ISO, etc. specifications are listed in Appendix A. Military Specifications are available from the ASSIST (Database for Military Specifications and Military Standards) website: https://assist.dla.mil.

17-4. Principles of Lubricant Selection.

a. Equipment Manufacturer Recommendations. The prime considerations are film thickness and wear. Although film thickness can be calculated, the wear properties associated with different lubricants are more difficult to assess. Lubricants are normally tested by subjecting them to various types of physical stress. However, these tests do not completely indicate how a lubricant will perform in service. Experience has probably played a larger role than any other single criterion. Through a combination of testing and experience, machine manufacturers have learned the classes of lubricants that will perform well in their products.

b. Professional societies have established specifications and classifications for lubricants to be used in a given mechanical application. For example, AGMA has established standard

specifications for enclosed and open gear systems. These specifications have been developed from the experience of the association's membership for a wide range of applications. Thus, any manufacturer has access to the collective knowledge of many contributors.

c. Note that the equipment manufacturer's recommendation should not necessarily be considered the best selection. Individual manufacturers may have different opinions based on their experience and equipment design. The concept of "best" lubricant is ambiguous because it is based on opinion. Despite this ambiguity, the manufacturer is probably in the best position to recommend a lubricant. This recommendation should be followed unless the lubricant fails to perform satisfactorily. When poor performance is evident, the manufacturer should be consulted for additional recommendations. This is especially critical if the equipment is still under warranty.

d. Although some manufacturers may recommend a specific brand name, they can usually provide a list of alternative lubricants that also meet the operating requirements for their equipment. One of the recommended lubricants should be used to avoid compromising the equipment warranty if it is still in effect. Physical qualities (such as viscosity or penetration number), chemical qualities (such as paraffinic or naphthenic oils), and applicable test standards are usually specified.

e. Lubricant Producer Recommendations. When manufacturers recommend lubricants for their products in terms of specifications or required qualities rather than particular brand names, the user must identify brands that meet the requirements. Following the suggestions given in this chapter may help the user identify appropriate products. When a user is uncertain, lubricant producers should be consulted to obtain advice on products that comply with the required specifications.

f. Many lubricant producers employ product engineers to assist users in selecting lubricants and to answer technical questions. Given a manufacturer's product description, operating characteristics, unusual operating requirements, and lubricant specification, product engineers can identify lubricants that meet the manufacturer's specifications. Viscosity should be the equipment manufacturer's recommended grade. If a recommendation seems unreasonable, the user should ask for verification or consult a different lubricant producer for a recommendation. These products will probably vary in quality and cost. The application should dictate lubricant selection. This will help prevent the unnecessary purchase of high-priced premium quality lubricants when they are not required.

g. User Selection. The user should ensure that applicable criteria are met regardless of who makes the lubricant selection. Selection should be in the class recommended by the machinery manufacturer (R&O, EP, AW, etc.) and be in the same base stock category (paraffinic, naphthenic, or synthetic). Furthermore, physical and chemical properties should be equal to or exceed those specified by the manufacturer. Generally, the user should follow the manufacturer's specification. Additional factors to be considered are shown in Table 17-1. Additional information on selecting additives is found in Chapter 5 and information for selecting lubricants for bearings is found in Chapter 15.

Table 17-1. Factors Affecting Lubricant Selection

Element	Type	Size	Material	Operating Temperature	Operating Conditions	Velocity	Remarks
Bearings	Plain, needle roller, ball	Shaft diameter				rev/min	
Chain drives	Links; number and pitch	Pitch Circle Diameter (PCD) of all wheels and distance between centers				Chain speed ft/min	
Cocks and valves	Plug, ball, etc.		Fluid being controlled				Depends on properties of the fluid
Compressors	Brake Horsepower (BHP), manufacturer's name			Gas temperature	Max gas pressure	rev/min	
Couplings	Universal or constant velocity					rev/min	
Cylinders		Bore, stroke	Cylinder, piston, rings	Combustion and exhaust gas temperature	Combustion and exhaust gas pressure	Crank speed, rev/min	
Gears	Spur, worm, helical, hyperbolic	BHP, distance between centers			Radiated heat and heat generated	rev/min	Method of lubricant application
Glands and seals	Stuffing box		Fluid being sealed				Depends on design
Hydraulic systems	BHP Pump type (gear, piston vane)		Hydraulic fluid materials "O" rings and cups, etc.				Lubricant type adjusting to loss rate
Linkages				Environmental heat conditions		Relative link speeds, ft/s, angular vel., rad/s	
Ropes	Steel hawser	Diameter			Frequency of use and pollution, etc.		
Slideways and guides						Surface relative speed, ft/min	
Reference: Neale, M.J. 1995. *A Tribology Handbook*. Butterworth-Heinemann Ltd., Oxford, England.							

h. If the manufacturer's specifications are not available, determine what lubricant is currently in use. If it is performing satisfactorily, continue to use the same brand. If the brand is not available, select a brand with specifications equal to or exceeding the brand previously used. If the lubricant is performing poorly, obtain the recommendation of a product engineer. If the application is critical, get several recommendations. Generally, the user will make a selection in either of two possible situations:

- Substitute a new brand for one previously in use.
- Select a brand that meets an equipment manufacturer's specifications. This will be accomplished by comparing producer's specifications with those of the manufacturer.

i. Product selection starts by using a substitution list maintained by most lubricant producers. A substitution list usually shows the products of major producers and the equivalent or competing product by other producers. Substitution lists are useful, but they have limitations. They may not be subdivided by classes of lubricants. Furthermore, it is difficult to do more than compare a lubricant of one producer with one given by the publishing producer. For example, consider three producers called A, B, and C. Producer A's substitution list may compare B's

products with A's, or C's with A's. However, B and C cannot be compared unless A has a product equivalent to both B and C. A user would need substitution lists from many producers to be able to effectively select more than one option. Many producers claim they do not have a substitution list, or are reluctant to provide one.

j. A substitution list or chart is valuable because it correlates the array of brand names used by producers. Furthermore, it eliminates producers who do not have the desired product in their line. A substitution list should be regarded as a starting point to quickly identify potential selections. The lists do not suggest or imply that lubricants listed as being equivalent are identical. The lists do indicate that the two lubricants are in the name class, have the name viscosity, and are intended for the same general use. The chart of interchangeable industrial lubricants lists the following categories:

- General purpose lubricants.
- Antiwear hydraulic oil.
- Spindle oil.
- Way oil.
- Extreme pressure gear oil.
- Worm gear oil.
- Open gear oil.
- General purpose extreme pressure lithium-based grease.
- Molybdenum disulfide extreme pressure grease.

(1) Spindle and way oils are not widely used. One of the last three classes on the list is a special preparation for open gears and the other two are classes of grease. General purpose oils, antiwear hydraulic oils, and EP gear oils are best described by comparison with the nonspecialized industrial oils discussed earlier. AW hydraulic oil is a general purpose oil, but its antiwear properties are sufficient to pass the Vickers vane test for hydraulic applications when this is required.

(2) The EP gear oils should correspond to those described under nonspecialized industrial oils except that EP additives are included and viscosities may be as high as ISO 2200. The EP classification of gear oil should not be confused with the SAE gear oil classification, which is for use in automotive gear systems. SAE gear oils are formulated differently and are not discussed in this manual.

(3) While grease preparation varies among producers, No. 2 lithium EP and molybdenum disulfide EP No. 2 are the two most widely used industrial greases. The name molybdenum disulfide designates lubricant type, and does not reflect the type of soap, but the soap will usually be lithium. While both types are intended to provide extra protection against wear, one contains EP additives and the other contains molybdenum disulfide.

(4) Lithium greases are the most widely used, but calcium, aluminum, polyurea, and sodium-calcium are also used. Furthermore, greases ranging from NLGI 00 to No. 3 are used.

(5) The open gear lubricants are residual oils to which a tackiness agent has been added. They are extremely adhesive and so viscous that solvents are added to permit application. After application, the solvent evaporates leaving the adhesive viscous material. Some products contain no solvent and must be heated to reduce viscosity for application.

(6) Compounded oils are not included in the list as a separate class. When this type of oil is required, producers must be contacted directly.

(7) Ultimately, information brochures provided by the producers must be examined to verify the following:

- Viscosity. The product viscosity meets the manufacturer's recommendation or is the same as a previously used lubricant that performed well. When a grease is considered, the viscosity of the included oil should be the same as the previous lubricant.
- Intended use. The product's intended use, as given by the producer, corresponds to the application in which the lubricant will be used.
- Class of lubricant. The class of lubricant is the same as that recommended by the equipment manufacturer or the same as a previously used lubricant that performed well. If the manufacturer recommended an R&O, AW, or EP oil, or a No. 2 lithium grease, that is what should be used.
- Specification. The product specifications are equal to or better than those recommended by the equipment manufacturer or those of a previously used lubricant that performed well.
- Additives. The product additives perform the required function even though they may not be chemically identical in several possible alternative lubricants.

17-5. Lubricant Consolidation.

a. General. Older machines tend to operate at slow speeds and light loads. These machines also tend to have large clearances and few lubricating points. Lubrication of such older machines is not as critical, comparatively speaking, as for modern machines that operate at higher speeds, under heavier loads, and with closer mechanical tolerances. A common maintenance practice is to have inventories of several types of lubricant to service both older and newer versions of similar equipment (e.g., speed reducers). This problem is further aggravated by the different types of unrelated equipment operating at a complex facility (e.g., turbines, speed reducers, ropes and chains, etc.), each requiring lubrication. Consolidation of lubricants is usually undertaken to reduce inventories, storage requirements, safety and health hazards, and cost. Consolidation, done properly, is a rational approach to handling the lubrication requirements at a facility while reducing the total number of lubricants in the inventory.

b. Manufacturer's Recommendations. Manufacturers may recommend lubricants by brand name or by specifying the lubricant characteristics required for a machine. Depending on the machine, lubricant specifications may be restrictive, or they may be general, allowing considerable latitude. Usually, the manufacturer's warranty will be honored only if the purchaser uses the lubricants recommended by the manufacturer. Voiding the terms of a warranty is not advisable so the specified lubricants should be used until the warranty has expired. After warranty expiration, the machine and its lubrication requirements may be included in the consolidation list for the facility.

c. Consolidation Considerations. Consolidation of lubricants requires careful analysis and matching of equipment requirements and lubricant properties. Factors that influence selection of lubricants include operating conditions, viscosity, viscosity index, pour point, extreme pressure properties, oxidation inhibitors, rust inhibitors, detergent dispersant additives, etc. With a grease, consideration must also include composition of the soap base, consistency, dropping point, and pumpability. There are several precautions that must be followed when consolidating lubricants.

(1) Characteristics. Consideration should be given to the most severe requirements of any of the original and consolidated lubricants. To prevent equipment damage, the selected lubricant must also have these same characteristics. This is true for greases.

(2) Special requirements. Applications with very specific lubricant requirements should not be consolidated.

(3) Compatibility. Remember that some lubricant additives may not be compatible with certain metals or seals.

d. Consolidation Procedure. Consolidation may be accomplished through the services of a lubricant producer or may be attempted by facility personnel who have knowledge of the equipment operating characteristics and lubricating requirements, and an ability to read lubricant producer's product data.

(1) Lubricant supplier. The preferred method for consolidating lubricants is to retain the services of a qualified lubrication engineer. All major oil companies have engineers available to help users with lubrication problems. There are also numerous independent lubricant suppliers with the necessary personnel and background to provide assistance. Ultimately, the knowledge, experience, integrity, and reputation of the lubricant supplier are the best assurance that the products recommended will meet the lubrication requirements for the equipment. The supplier must be given a list of equipment, along with any information about the operating characteristics, ambient conditions, and lubrication requirements. The engineer can use this information to consolidate lubricating requirements where possible, and to isolate equipment with highly specific requirements that cannot be consolidated. The primary disadvantage with this approach is that the lubricant supplier will, in all probability, recommend only those products within the company's product line. If this is a major concern, the services of an independent lubricating engineer or tribologist, not affiliated with any supplier, may be retained.

(2) Consolidation by in-house personnel. In-house personnel should begin the consolidation process by preparing a spreadsheet identifying equipment, lubricating requirements, lubricant characteristics, and brand names. The equipment should be sorted by type of lubricant (oil, hydraulic fluid, synthetics, biodegradable, grease) required. Under each type, the properties of each lubricant should be grouped such as oil viscosity, detergent dispersant requirements, EP requirements, R&O inhibitors, NLGI grade of grease, viscosity of oil component in the grease, pumpability, etc. At this stage, viscosity grouping can be made. For instance, if three similar oils have viscosities of 110, 150, and 190 SUS at 100 °F (37.8 °C), the 150 may be used as a final selection. If one of the original oils was R&O inhibited, the final product should also have this property. A second group of oils with viscosities of 280, 330, and 350 SUS at 100 °F (37.8 °C) could be reduced to one oil having a viscosity in the neighborhood of 315 SUS at 100 °F (37.8 °C). The goal is to identify the viscosity requirements and range for various equipment and see if a single lubricant can span the range. If the range can be covered, then consolidation is possible. However, recall that Paragraph 17-4 included a warning that the lubricant viscosity for a machine must comply with the manufacturer's requirements. Obviously, an exact match of viscosity for all equipment cannot be accomplished with the same lubricant when consolidation is the goal. Lubricants with vastly different viscosity requirements must not be consolidated.

(3) Use higher quality lubricants. Another alternative for consolidation is to use higher grade lubricants that are capable of meeting the requirements of various machinery. Although the cost of high-grade lubricants is greater, this may still be offset by the benefits of consolidation (e.g., reduction in the number of different lubricants needed, reduction in inventory-management requirements, possible price discounts for purchasing certain lubricants in greater quantity, etc.).

(4) Use multipurpose lubricants. Multipurpose lubricants and other general purpose oils can be applied to a wide range of equipment and help reduce the number of lubricants required. Although some lubricants are not listed as multipurpose they may be used in this capacity. For example, assume two lubricants by the same producer: one is listed as an R&O turbine oil and the other as a gear oil. Examination of product literature shows that the R&O turbine oil can also be used in bearings, gear sets, compressors, hydraulic systems, machine tools, electric motors, and roller chains while the gear oil can also be used in circulating system, chain drives, plain and antifriction bearings, and slides. These oils may be suitable for use in a consolidating effort. Producers often have similar application overlaps in their product lines.

THIS PAGE INTENTIONALLY LEFT BLANK