Chapter 3

FIELD INVESTIGATIONS

3.1 Introduction

In contrast to conventional technologies, the analysis and design of land treatment systems requires specific information on the properties of the proposed site or sites. Too little field data may lead to erroneous conclusions while too much will result in unnecessarily high costs with little refinement in the design concept. Experience indicates that where uncertainty exists, it is prudent to adopt a conservative posture relative to data gathering requirements.

Figure 3-1 is a flow chart which presents a logical sequence of field testing for a land treatment project. At several points, available data are used for calculations or decisions that may then necessitate additional field tests. These additional tests are usually directed toward estimation of new parameters, required for extending the analysis. However, in some cases, additional field tests may also be required simply to refine preliminary estimates.

Guidance on testing for wastewater constituents and soil properties is provided for each land treatment process in Table 3-1. Normally, relatively modest programs of field testing and data analysis will be satisfactory. In certain instances, however, more complex investigations and analyses are required with higher levels of expertise in soil testing and evaluation procedures. Firms specializing in these areas are available for assistance if expertise does not exist within the firm having general design responsibility.

3.2 Physical Properties

Preliminary screening, as described in Chapter 2, of a potential site (or sites) will ordinarily be based on existing field data available from a SCS county soil survey and other sources. The next step involves some physical exploration on the site. This preliminary exploration is of critical importance to subsequent phases of the project. Its two purposes are: (1) verification of existing data and (2) identification of probable, or possible, site limitations; and it should be performed with reasonable care. For example, the presence of wet areas, water-loving plant species, or surficial salt crusts should alert the designer to the need for detailed field studies directed toward the problem of drainage. The presence of rock outcroppings

→ TYPICAL ORDER OF TESTING

	FIELD TESTS			
	TEST PITS →	BORE HOLES →	INFILTRATION RATE →	SOIL CHEMISTRY
REMARKS	USUALLY WITH A BACKHOE, INCLUDES INSPECTION OF EXISTING SCS REPORTS, ROAD CUTS, ETC. (3.2.1)	DRILLED OR AUGERED, INCLUDES INSPECTION OF DRILLER'S LOGS FOR LOCAL WELLS, WATER TABLE LEVELS (3.2.2)	MATCH THE EXPECTED METHOD OF APPLICATION, IF POSSIBLE (3.4)	INCLUDES REVIEW OF SCS SURVEY (3.7)
INFORMATION TO OBTAIN	DEPTH OF PROFILE, TEXTURE, STRUCTURE, SOIL LAYERS RESTRICTING PERCOLATION	DEPTH TO GROUND WATER, DEPTH TO IMPERMEABLE LAYER(S)	EXPECTED MINIMUM INFILTRATION RATE	SPECIFIC DATA RELATING TO CROP AND SOIL MANAGEMENT, PHOSPHORUS AND HEAVY METAL RETENTION
ESTIMATES NOW POSSIBLE	NEED FOR VERTICAL CONDUCTIVITY TESTING	GROUND WATER FLOW DIRECTION	HYDRAULIC CAPACITY BASED ON SOIL PERMEABILITY (SUBJECT TO DRAINAGE RESTRICTIONS)	CROP LIMITATIONS. SOIL AMENDMENTS. POSSIBLE PRE-APPLICATION REQUIREMENTS.
ADDITIONAL FIELD TESTS	VERTICAL CONDUCTIVITY (OPTIONAL)	HORIZONTAL CONDUCTIVITY	--	--
ADDITIONAL ESTIMATES	REFINEMENT OF LOADING RATES	MOUNDING ANALYSIS, DISPERSION, NEED FOR DRAINAGE	--	QUALITY OF PERCOLATE
NUMBER OF TESTS	DEPENDS ON SIZE, SOIL UNIFORMITY, NEEDED SOIL TESTS, TYPE OF SYSTEM. TYPICAL MINIMUM OF 3 TO 5 PER SITE.	DEPENDS ON SYSTEM TYPE (MORE FOR RI THAN SR), SOIL UNIFORMITY, SITE SIZE. TYPICAL MINIMUM OF 3 PER SITE.	DEPENDS ON SIZE OF SITE, UNIFORMITY OF SOIL. TYPICAL MINIMUM OF 2 PER SITE.	DEPENDS ON UNIFORMITY OF SOIL TYPES, TYPE OF TEST, SIZE OF SITE

FIGURE 3-1
FLOW CHART OF FIELD INVESTIGATIONS

would signify the need for more detailed subsurface investigations than might normally be required. If a stream were located near the site, there would need to be additional study of the surface and near-surface hydrology; wells would create a concern about details of the ground water flow, and so on. These points may seem obvious. However, there are examples of systems that have failed because of just such obvious conditions: limitations that were not recognized until after design and construction were complete.

TABLE 3-1
SUMMARY OF FIELD TESTS FOR
LAND TREATMENT PROCESSES

	Processes		
Properties	Slow rate (SR)	Rapid infiltration (RI)	Overland flow (OF)
Wastewater constituents	Nitrogen, phosphorus, SAR[a], EC[a], boron	BOD, SS, nitrogen, phosphorus	BOD, SS, nitrogen, phosphorus
Soil physical properties	Depth of profile	Depth of profile	Depth of profile
	Texture and structure	Texture and structure	Texture and structure
Soil hydraulic properties	Infiltration rate	Infiltration rate	Infiltration rate (optional)
	Subsurface permeability	Subsurface permeability	--
Soil chemical properties	pH, CEC, exchangeable cations (% of CEC), EC[a], metals[b], phosphorus adsorption (optional)	pH, CEC, phosphorus adsorption	pH, CEC, exchangeable cations (% of CEC)

a. May be more significant for arid and semiarid areas.

b. Background levels of metals such as cadmium, copper, or zinc in the soil should be determined if food chain crops are planned.

3.2.1 Shallow Profile Evaluation

Following the initial field reconnaissance, some subsurface exploration will be needed. In the preliminary stages, this consists of digging pits, usually with a backhoe, at several carefully selected locations. Besides exposing the soil profile for inspection and sampling, the purpose is to identify subsurface features that could develop into site limitations, or that point to potential adverse features. Conditions such as fractured, near-surface rock, hardpan layers, evidence of mottling in the profile, lenses of open-work gravel and other anomalies should be carefully noted. For OF site evaluations, the depth of soil profile evaluation can be the top 1 m (3 ft) or so. The evaluation should extend to 1.5 m (5 ft) for SR and 3 m (10 ft) or more for RI systems.

3.2.2 Profile Evaluation to Greater Depths

In some site evaluations, the 2.5 to 3.7 m (about 8 to 12 ft) deep pits that can be excavated by a backhoe will not yield sufficient information on the profile to allow all the desired analyses to be made. For example, it may be necessary to locate both the ground water table and the depth to the closest impermeable layer. These depths together with horizontal conductivity values and certain other data are required to make mounding analyses, design drainage facilities, and for contaminant mass balance calculations.

Auger holes or bore holes are frequently used to explore soil deposits below the limits of pit excavation. Augers are useful to relatively shallow depths compared to other boring techniques. Depth limitation for augering varies with soil type and conditions, as well as hole diameter. In unconsolidated materials above water tables, 12.7 cm (5 in.) diameter holes have been augered beyond 35 m (115 ft). Cuttings that are continuously brought to the surface during augering are not suitable for logging the soil materials. Withdrawal of the auger flights for removal of the cuttings near the tip represents an improvement as a logging technique. The best method is to withdraw the flights and obtain a sample with a Shelby tube or split-spoon sampler.

Boring methods, which can be used to probe deeper than augering, include churn drilling, jetting, and rotary drilling. When using any of these methods it is preferable to clean out the hole and secure a sample from the bottom of the hole with a Shelby tube or split-spoon sampler.

3.3 Hydraulic Properties

The planning and design work relative to land treatment systems cannot be accomplished without estimates of several hydraulic properties of the site. The capacity of the soil to accept and transmit water is crucial to the design of RI systems and may be limiting in the design of some SR systems as well. In addition, tracking the movement and impacts of the wastewater and its constituents after application will always be an important part of design.

For purposes of this manual, hydraulic properties of soil are considered to be those properties whose measurement involves the flow or retention of water within the soil profile.

3.3.1 Saturated Hydraulic Conductivity

A material is considered permeable if it contains interconnected pores, cracks, or other passageways through which water or gas can flow. Hydraulic conductivity (synonymous with the term permeability in this manual) is a measure of the ease with which liquids and gases pass through soil. The term is more easily understood if a few basic concepts of water flow in soils are introduced first.

In general, water moves through soils or porous media in accordance with Darcy's equation:

$$q = \frac{Q}{A} = K\frac{dH}{dl} \qquad (3\text{-}1)$$

where q = flux of water, the flow, Q per unit cross sectional area, A, cm/h (in./h)

K = hydraulic conductivity (permeability), cm/h (in./h)

dH/dl = hydraulic gradient, m/m (ft/ft)

The total head (H) can be assumed to be the sum of the soil—water pressure head (h), and the head due to gravity (Z), or H = h + Z. The hydraulic gradient is the change in total head (dH) over the path length (dl).

The hydraulic conductivity is defined as the proportionality constant, K. The conductivity (K) is not a true constant but a rapidly changing function of water content. Even under conditions of constant water content, such as saturation, K may vary over time due to increased swelling of clay particles, change in pore size distribution due to classification of particles, and change in the chemical nature of soil-water. However, for most purposes, saturated conductivity (K) can be considered constant for a given soil. <u>The K value for flow in the vertical direction will not necessarily be equal to K in the horizontal direction</u>. This condition is known as anisotropic. It is especially apparent in layered soils and those with large structural units.

The conductivity of soils at saturation is an important parameter because it is used in Darcy*s equation to estimate ground water flow patterns (see Section 3.6.2) and is useful in estimating soil infiltration rates. Conductivity is frequently estimated from other physical properties but much experience is required and results are not sufficiently

accurate for design purposes [1-5]. For example, hydraulic conductivity is largely controlled by soil texture: coarser materials having higher conductivities. However, in some cases the soil structure may be equally important: well structured fine soils having higher conductivities than coarser unstructured soils.

In addition, hydraulic conductivity for a specific soil may be affected by variables other than those relating to grain size, structure, and pore distribution. Temperature, ionic composition of the water, and the presence of entrapped air can alter conductivity values [1].

3.3.2 Infiltration Capacity

The infiltration rate of a soil is defined as the rate at which water enters the soil from the surface. When the soil profile is saturated with negligible ponding above the surface, the infiltration rate is equal to the effective saturated conductivity of the soil profile.

When the soil profile is relatively dry, the infiltration rate is higher because water is entering large pores and cracks. With time, these large pores fill and clay particles swell reducing the infiltration rate rather rapidly until a near steady-state value is approached. This change in infiltration rate with time is shown in Figure 3-2 for several different soils. The effect of both texture and structure on infiltration rate is illustrated by the curves in Figure 3-2. The Aiken clay loam has good structural stability and actually has a higher final infiltration rate than the sandy loam soil. The Houston black clay, however, has very poor structure and infiltration drops to near zero.

For a given soil, initial infiltration rates may vary considerably, depending on the initial soil moisture level. Dry soil has a higher initial rate than wet soil because there is more empty pore space for water to enter. The short term decrease in infiltration rate is primarily due to the change in soil structure and the filling of large pores as clay particles absorb water and swell. Thus, adequate time must be allowed when running field tests to achieve a steady intake rate.

Infiltration rates are affected by the ionic composition of the soil-water, the type of vegetation, and tillage of the soil surface. Factors that have a tendency to reduce infiltration rates include clogging by suspended solids in wastewater, classification of fine soil particles, clogging due to biological growths, gases produced by soil microbes, swelling of soil colloids, and air entrapped during a wetting

event [6, 7]. These influences are all likely to be experienced when a site is developed into a land treatment system. The net result is to restrict the hydraulic loadings of land treatment systems to values substantially less than those predicted from the steady state intake rates (see Figure 3-2), requiring reliance on field-developed correlations between clean water infiltration rates and satisfactory operating rates for full-scale systems. It should be recognized that good soil management practices can maintain or even increase operating rates, whereas poor practices can lead to substantial decreases.

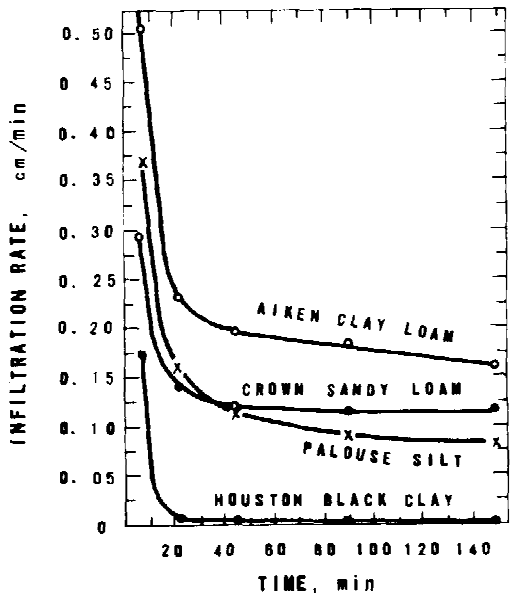

FIGURE 3-2
INFILTRATION RATE AS A FUNCTION
OF TIME FOR SEVERAL SOILS [3]

Although the measured infiltration rate on the particular site may decrease in time due to surface clogging phenomena, the subsurface vertical permeability at saturation will generally remain constant. That is, clogging in depth does not generally occur. Thus, the short-term measurement of infiltration serves reasonably well as an estimate of the long-term saturated vertical permeability if infiltration is measured over a large area. Once the infiltration surface begins to clog, however, the flow beneath the clogged layers tends to be unsaturated and at unit hydraulic gradient.

The short-term change in infiltration rate as a function of time is of interest in the design and operation of SR systems. A knowledge of how cumulative water intake varies with time is necessary to determine the time of application necessary to infiltrate the design hydraulic load. The design application rate of sprinkler systems should be selected on the basis of the infiltration rate expected at the end of the application period.

3.3.3 Specific Yield

The term specific yield is most often used in connection with unconfined aquifers and has also been called the storage coefficient and drainable voids. It is usually understood to be the volume of water released from a unit volume of unsaturated aquifer material drained by a falling water table. Although the term fillable porosity has occasionally been used as a synonym for the above three terms, it is actually a somewhat smaller quantity because of the effect of entrapped air. The primary use of specific yield values is in computing aquifer properties, for example, to perform ground water mound height analyses. For relatively coarse-grained soils and deep water tables, it is usually satisfactory to consider the specific yield a constant value. As computations are not extremely sensitive to small changes in the value of specific yield, it is usually satisfactory to estimate it from knowledge of other soil properties, either physical as in Figure 3-3 [8], or hydraulic as in Figure 3-4 [9]. To clarify Figure 3-3, specific retention is equal to the porosity minus the specific yield.

A note of caution, however. For fine-textured soils, especially as the water table moves higher in the profile, the specific yield may not have a constant value because of capillarity. Discussion of this complication may be found in references [10, 111. The effect of decreasing specific yield with increasing water table height can lead to serious difficulties with mound height analysis (Section 5.7.2).

3.3.4 Unsaturated Hydraulic Conductivity

The conductivity of soil varies dramatically as water content is reduced below saturation. As an air phase is now present, the flow channel is changed radically and now consists of an irregular solid boundary and the air-water interface. The flow path becomes more and more tortuous with decreasing water content as the larger pores empty and

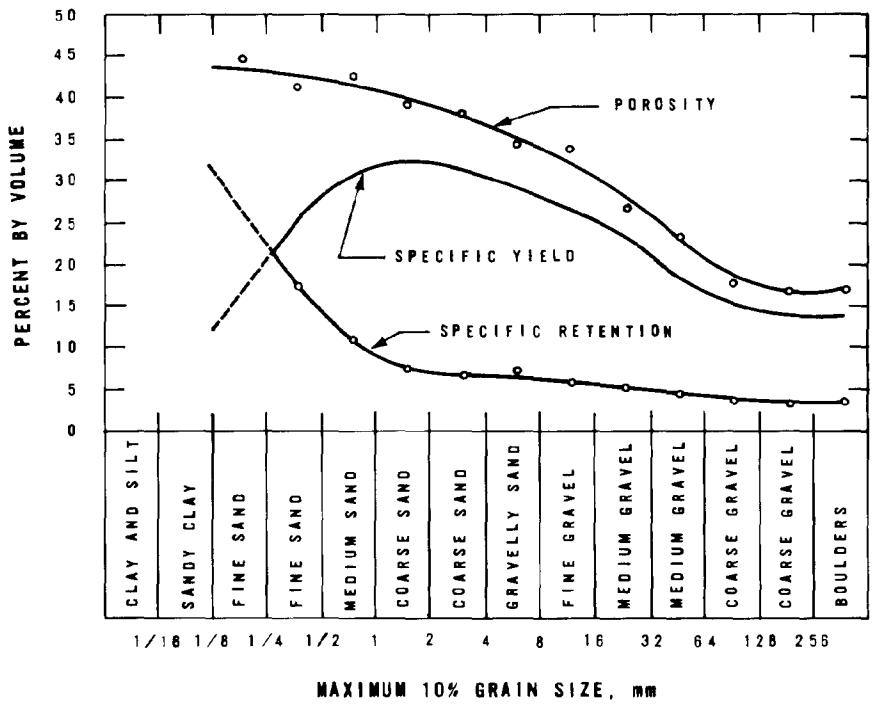

FIGURE 3-3
POROSITY, SPECIFIC RETENTION, AND
SPECIFIC YIELD VARIATIONS WITH GRAIN SIZE
SOUTH COASTAL BASIN, CALIFORNIA [8]

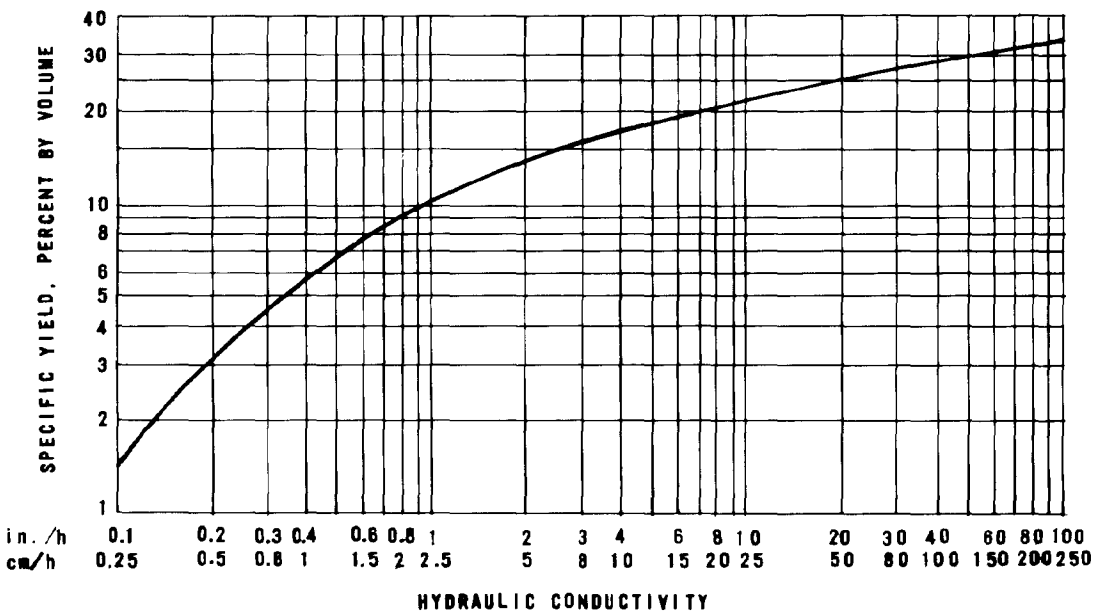

FIGURE 3-4
GENERAL RELATIONSHIP BETWEEN SPECIFIC YIELD
AND HYDRAULIC CONDUCTIVITY [9]

flow becomes confined to the smaller pores. Compounding the effect of decreasing cross-sectional area for flow is the effect of added friction as the flow takes place closer and closer to solid particle surfaces. The conductivity of sandy soils, although much higher at saturation than loamy soils, decreases more rapidly as the soil becomes less saturated. In most cases, the conductivities of sandy soils eventually become lower than finer soils. This relationship explains why a wetting front moves more slowly in sandy soils than medium or fine soils after irrigation has stopped and why there is little horizontal spreading of moisture in sandy soils after irrigation.

Estimating water movement under unsaturated conditions using Darcy*s equation and unsaturated K values is complex. A discussion of such calculations is outside the scope of this manual. The user is referred to references [1, 10, 12, 13] for further details and solution of special cases.

3.3.5 Profile Drainage

For SR systems that are operated at application rates considerably in excess of crop irrigation requirements, it is often desirable to know how rapidly the soil profile will drain and/or dry after application has stopped. This knowledge, together with knowledge of the limiting infiltration rate of the soil and the ground water movement and buildup, allows the designer to make a reasonable estimate of the maximum volume of water that can be applied to a site and still produce adequate crops. A typical moisture profile and its change with time following an irrigation is illustrated in Figure 3-5 for an initially saturated profile. Moisture profile changes may be determined in the field with tensiometers [4].

3.4 Infiltration Rate Measurements

The value that is required in land treatment design is the long-term acceptance rate of the entire soil surface on the proposed site for the actual wastewater effluent to be applied. The value that can be measured is only a shortterm equilibrium acceptance rate for a number of particular areas within the overall site.

There are many potential techniques for measuring infiltration including flooding basin, cylinder infiltrometers, sprinkler infiltrometers and air-entry permeameters. A comparison of these four techniques is presented in Table 3-2. In general, the test area and the volume of water used should be as large as practical. The two main categories of measurement techniques are those involving flooding (ponding

over the soil surface) and rainfall simulators (sprinkling infiltrometer). The flooding type of infiltrometer supplies water to the soil without impact, whereas the sprinkler infiltrometer provides an impact similar to that of natural rain. Flooding infiltrometers are easier to operate than sprinkling infiltrometers, but they almost always give higher equilibrium infiltration rates. In some cases, the difference is very significant, as shown in Table 3-3. Nevertheless, the flooding measurement techniques are generally preferred because of their simplicity. Relationships between infiltration rates as obtained by various flooding techniques and the loading rates of RI systems are discussed in Section 5.4.1. The air entry permeameter is described in Section 3.5.2.

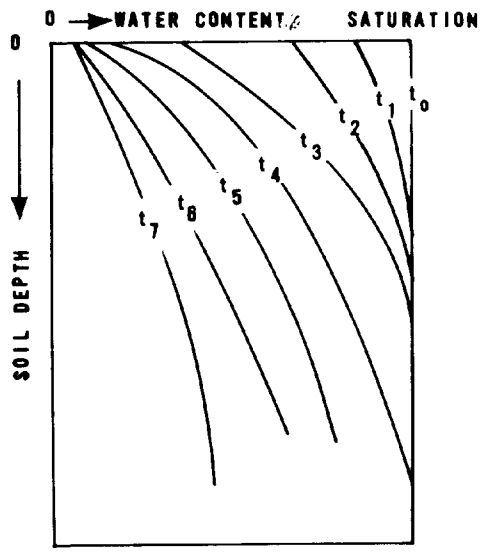

FIGURE 3-5
TYPICAL PATTERN OF THE
CHANGING MOISTURE PROFILE DURING DRYING AND DRAINAGE

If a sprinkler or flood application is planned, the test should be conducted in surficial materials. If RI is planned, pits must be excavated to expose lower horizons that will constitute the bottoms of the basins. If a more restrictive layer is present below the intended plane of infiltration and this layer is close enough to the intended plane to interfere, the test should be conducted at this layer to ensure a conservative estimate.

TABLE 3-2
COMPARISON OF INFILTRATION
MEASUREMENT TECHNIQUES

Measurement technique	Water use per test, L	Time per test, h	Equipment needed	Comments
Flooding basin	2,000-10,000	4-12	Backhoe or blade	Tensiometers may be used
Cylinder infiltrometer	400-700	1-6	Cylinder or earthen berm	Should use large diameter cylinders (1 m diameter)
Sprinkler infiltrometer	1,000-1,200	1.5-3	Pump, pressure tank, sprinkler, cans	For sprinkler applications, soil should be at field capacity before test
Air entry permeameter (AEP)	10	0.5-1	AEP apparatus, standpipe with resevoir	Measures vertical hydraulic conductivity. If used to measure rates of several different soil layers, rate is harmonic mean of conductivities from all soil layers.

Note: See Appendix G for metric conversions.

TABLE 3-3
SAMPLE COMPARISON OF INFILTRATION MEASUREMENT
USING FLOODING AND SPRINKLING TECHNIQUES [14]

Measurement technique	Equilibrium infiltration rate, cm/h	
	Overgrazed pasture	Pasture, grazed but having good cover
Double-cylinder infiltrometer (flooding)	2.82	5.97
Type F rainfall simulator (sprinkling)	2.90	2.87

Infiltration test results are typically plotted as shown in Figures 3-2 and B-3. The derivation of design values from these test results is presented in Appendix B.

Before discussing the infiltration measurement techniques, it should be pointed out that the U.S. public Health Service (USPHS) percolation test used for establishing the size of septic tank drain fields [15] is definitely not recommended as a method for estimating infiltration.

3.4.1 Flooding Basin Techniques

Pilot-scale infiltration basins represent an excellent technique for determining vertical infiltration rates. The larger the test area is, the less the relative error due to lateral moisture movement will be and the better the estimate. Where such basins have bean used, the plots have generally ranged from about 0.9 m^2 (10 ft) to 0.1 ha (0.25 acre). In some cases, pilot basins of large scale (2 to 3.2 ha or 5 to 8 acres) have been used to determine infiltration rates and demonstrate feasibility with the thought of incorporating the test basins into a subsequent full-scale system [16]. Figure 3-6 is a photograph of a pilot basin.

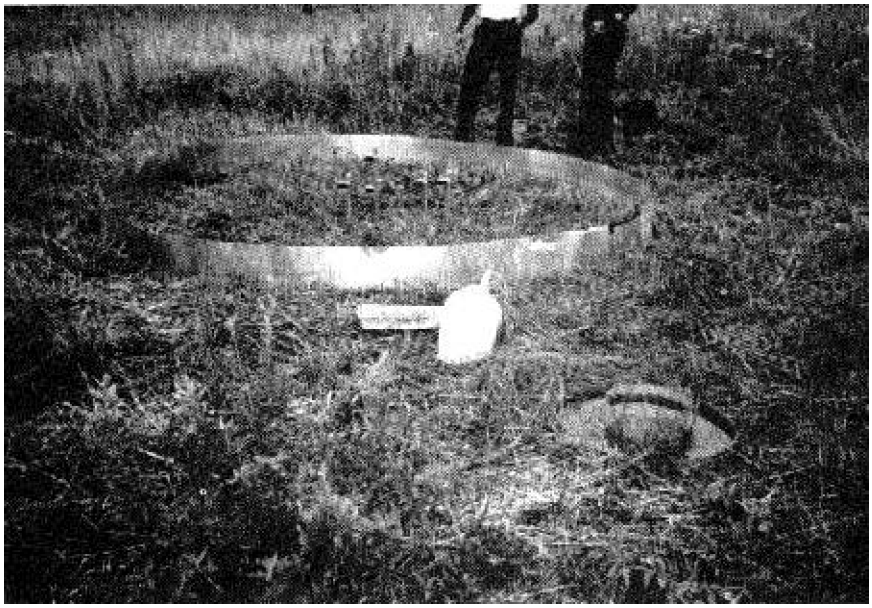

FIGURE 3-6
FLOODING BASIN USED FOR MEASURING INFILTRATION

The Corps of Engineers has used flooding basin tests to determine infiltration rates on three existing land treatment sites [17]. Basins of 6.1 m (20 ft) and 3 m (10 ft) diameter were used and it was concluded that the 3 m (10 ft) diameter basin was large enough to provide reliable infiltration data. About 4 man-hours were required for completing an installation and less than 1,000 L (265 gal) of water would probably be adequate to complete a test. As this testing procedure will undoubtedly become more widely adopted, Figures 3-7 and 3-8 are included to show the details of installation [18].

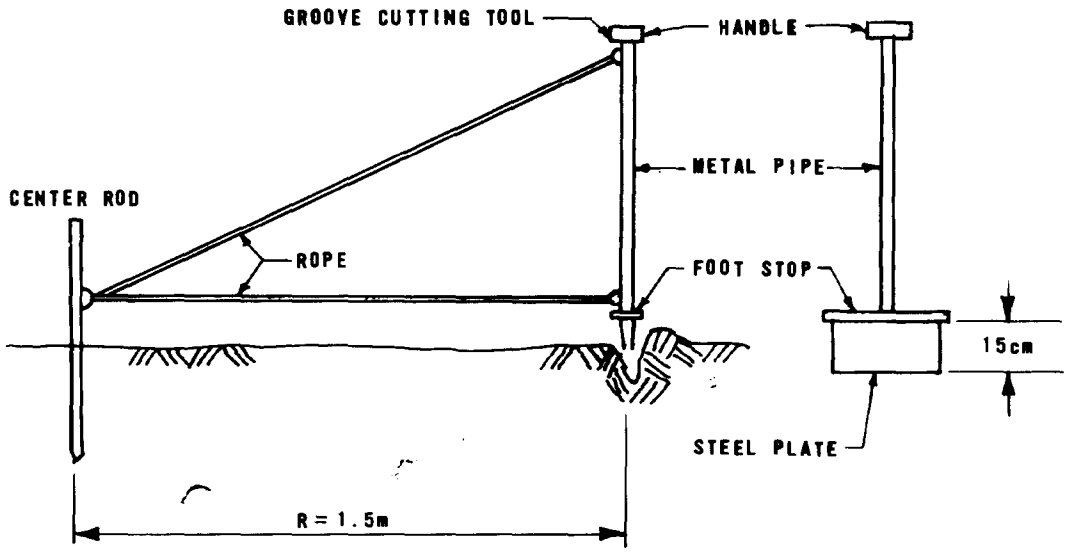

FIGURE 3-7
GROOVE PREPARATION FOR FLASHING (BERM) [18]

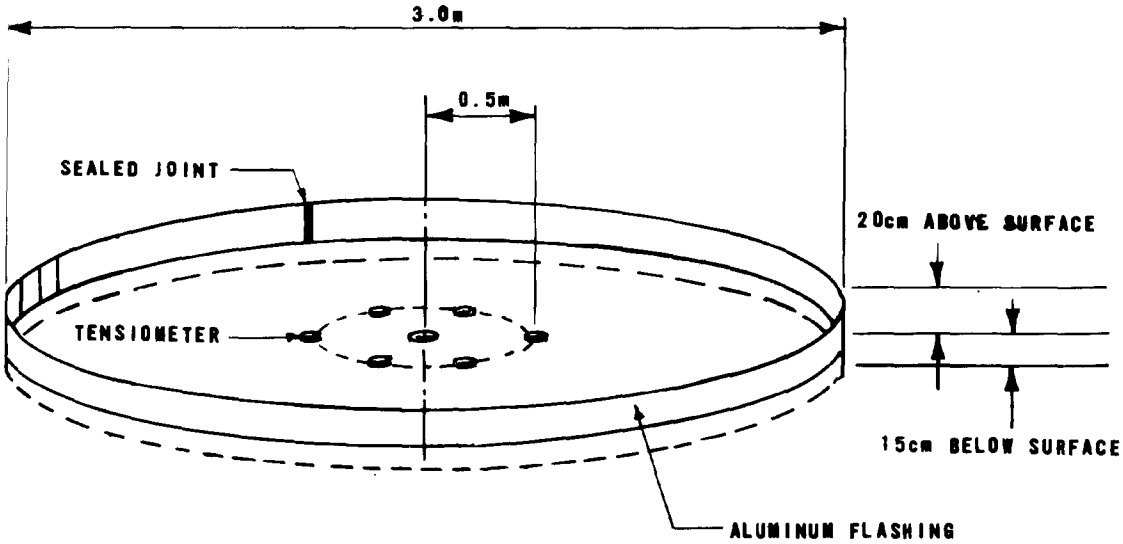

FIGURE 3-8
SCHEMATIC OF FINISHED INSTALLATION [18]

An important assumption in any flooding type infiltration test is a saturated (or nearly so) condition in the upper soil profile. Thus, an essential part of this method is the installation of a number of tensiometers within the test area at various depths to verify saturation by their approach to a zero value of the matric potential, before obtaining any head drop (water level) measurements. In the Corps of Engineers studies, six tensiometers were installed in a 1 m (3.3 ft) diameter circle concentric with the center of the 3 m (10 ft) diameter test basin as shown in Figure 3-8. Table 3-4 gives their suggested depths of placement in a soil of well-developed horizons; however, any reasonable spacing above strata of lower conductivity, if such exist, should be adequate. In soils lacking welldeveloped horizons, a uniform spacing down to about 60 cm (24 in.) should suffice. A seventh tensiometer installed at a depth of about 150 cm (60 in.) is also suggested, but is not critical.

TABLE 3-4
SUGGESTED VERTICAL PLACEMENT OF
TENSIOMETERS IN BASIN INFILTROMETER TESTS [18]

No.	Soil horizon	Placement
1	A	Midpoint of A
2	B	1/5 distance between A/B and B/C interfaces
3	B	2/5 distance between A/B and B/C interfaces
4	B	3/5 distance between A/B and B/C interfaces
5	B	4/5 distance between A/B and B/C interfaces
6	C	15 cm below B/C interface

Following installation and calibration of the tensiometers, a few preliminary flooding events are executed to achieve saturation. Evidence of saturation is the reduction of tensiometer readings to near zero through the upper soil profile. Then a final flooding event is monitored to derive a cumulative intake versus time curve. A best fit to the data plotted on log-log paper allows calculation of the infiltration parameters, as shown in Figure 3-9. Subsequent observation of tensiometers can then provide data on profile drainage.

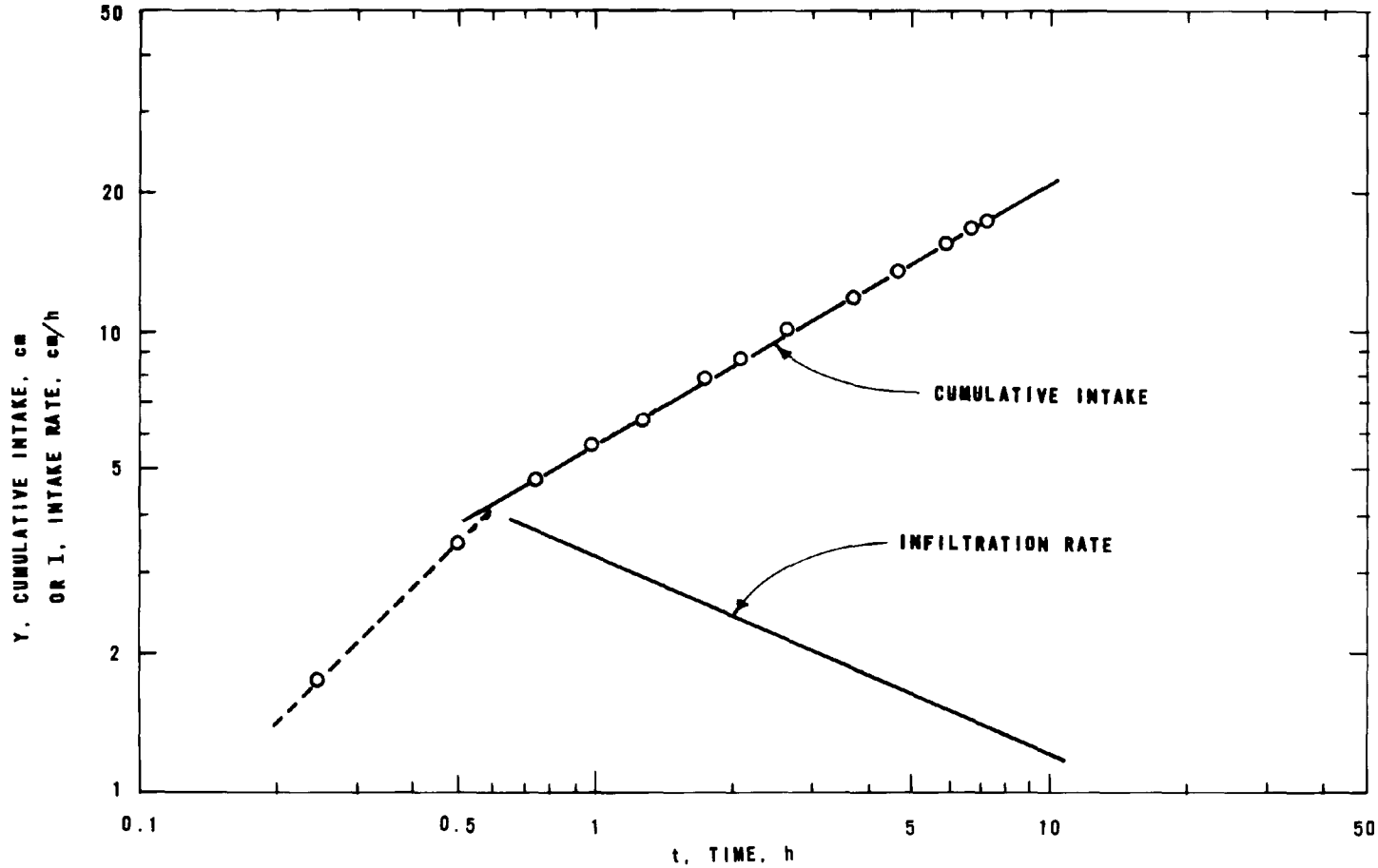

FIGURE 3-9
INFILTRATION RATE AND CUMULATIVE INTAKE DATA PLOT

3.4.2 Cylinder Infiltrometers

The equipment and basic methodology for this popular measurement technique are described in references [9, 19, 20]. The equipment setup for a test is shown in Figure 3-10.

To run a test, a metal cylinder is carefully driven or pushed into the soil to a depth of about 10 to 15 cm (4 to 6 in.). Measurement cylinders of from 15 to 35 cm (6 to 14 in.) diameter have generally been used in practice, with lengths of about 25 to 30.5 cm (10 to 12 in.). Divergent flow, partially obstructed by the portion of the cylinder beneath the soil surface, is further minimized by means of a "buffer zone" surrounding the central ring. The buffer zone is commonly provided by another cylinder 40 to 70 cm (16 to 30 in.) diameter, driven to a depth of 5 to 10 cm (2 to 4 in.) and kept partially full of water during the time of infiltration. This particular mode of making measurements has come to be known as the double-cylinder or double-ring infiltrometer method. Care must be taken to maintain the water levels in the inner and outer cylinders at the same level during the measurements. Alternately, buffer zones are provided by diking the area around the intake cylinder with low (7.5 to 10 cm or 3 to 4 in.) earthen dikes.

If the cylinder is installed properly and the test carefully performed, the technique should produce data that at least approximate the vertical component of flow. In most soils, as the wetting front advances downward through the profile, the infiltration rate will decrease with time and approach a steady—state value asymptotically. This may require as little as 20 to 30 minutes in some soils and many hours in others. Certainly, one could not terminate a test until the steady—state condition was attained or the results would be totally meaningless (see Figure 3-2).

Anyone contemplating the use of this measurement technique because of its apparent simplicity should also be aware of its limitations. Discussions dealing specifically with the problem of separating the desired vertical component from the total moisture flux, which may include a large lateral component, can be found in references [21, 22].

A more promising direction is suggested in reference [19] in which the main conclusion is applicable: <u>to minimize errors in the use of the cylinder infiltrometer technique; use only large-diameter cylinders and careful installation techniques</u>. The specific recommendation as to cylinder diameter is a minimum of 1 m (3.3 ft).

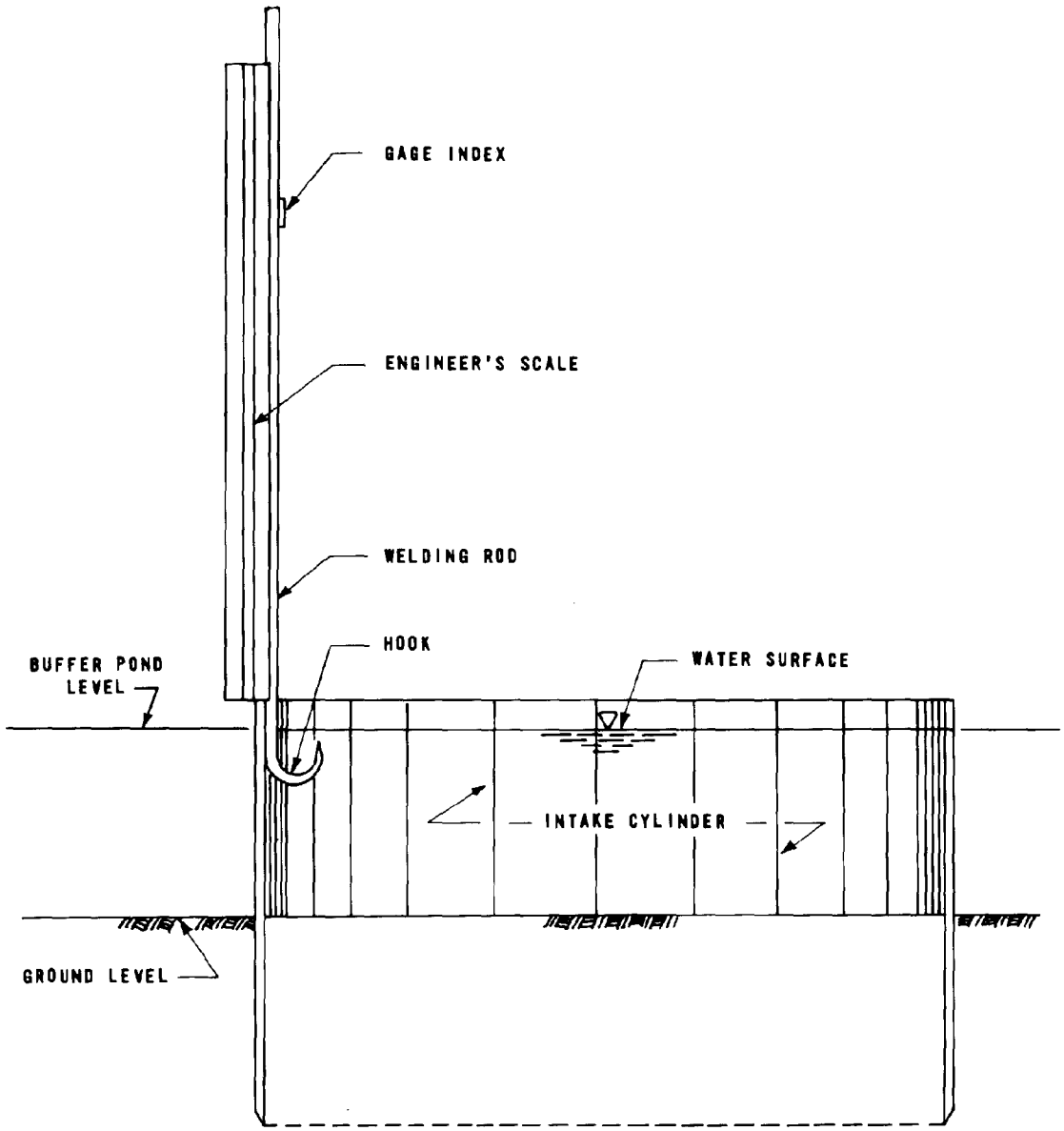

FIGURE 3-10
CYLINDER INFILTROMETER IN USE

Installation should disturb the soil as little as possible. This generally requires thin-walled cylinders with a beveled edge and very careful driving techniques. In soft soils, cylinders may be pushed or jacked in. In harder soils, they must be driven in. The cylinders must be kept straight during this process, especially avoiding a “rocking” or tilting motion to advance them downward. In cohesionless coarse sands and gravels, a poor bond between the soil and the metal cylinder often results, allowing seepage around the edge of the cylinder. Such conditions may call for special methods to be devised. One such method is to construct the test area by forming low dikes and covering the inside walls with plastic sheet to prevent lateral seepage [19]. This begins to approach the basin flooding method described in Section 3.4.1.

Measurements of infiltration capacity of soils often show wide variations within a relatively small area. Hundredfold differences are common on some sites. Assessing hydraulic capacity for a project site is especially difficult because test plots may have adequate capacity when tested as isolated portions, but may prove to have inadequate capacity after water is applied to the total area for prolonged periods. Problem areas can be anticipated more readily by field study following spring thaws or extended periods of heavy rainfall and recharge [23]. Runoff, ponding, and near saturation conditions may be observed for brief periods at sites where drainage problems are likely to occur after extensive application begins.

Although far too few extensive tests have been made to gather meaningful statistical data on the cylinder infiltrometer technique, one very comprehensive study is available from which tentative conclusions can be drawn.

Test results from three plots (357 individual tests) located on the same homogeneous field were compared. In addition, test results from single-cylinder infiltrometers with no buffer zone were compared with those from double-cylinder infiltrometers. The inside cylinders had a 15 cm (6 in.) diameter; the outside cylinders, where used, had a 30 cm (12 in.) diameter. For this particular soil, the presence of a buffer zone did not have a significant effect on the measured rates. These data, although very carefully taken, overestimate the field average by about 40%, indicating that small diameter cylinders will consistently overestimate the true vertical infiltration rate [14].

3.4.3 Sprinkler Infiltrometers

Sprinkler infiltrometers are used primarily to determine the limiting application rate for systems using sprinklers. To measure the soil intake rate for sprinkler application, the method presented in reference [24] can be used. The equipment needed includes a trailer-mounted water recirculating unit, a sprinkler head operating inside a circular shield with a small side opening, and approximately 50 rain gages.

A schematic diagram of a typical sprinkler infiltrometer is presented in Figure 3-11. A 1,814 kg (2 ton) capacity trailer houses a 1,135 L (300 gal) water supply tank and 2 self-priming centrifugal pumps. The sprinkler pump should have sufficient capacity to deliver at least 6.3 L/s (100 gal/mm) at 34.5 N/cm^2 (50 $lb/in.^2$) to the sprinkler nozzle, and the return flow pump should be capable of recycling all excess water from the shield to the supply tank. The circular sprinkler shield is designed to permit a revolving head sprinkler to operate normally inside the shield. The opening in the side of the shield restricts the wetted area to about one-eighth of a circle. Prior to testing, the soil in the wetted area is brought up to field capacity. Rain gages are then set out in rows of three spaced at 1.5 m (5 ft) intervals outward from the sprinkler in the center of the area to be wetted. The sprinkler is operated for about 1 hour. The intake of water in the soil at various places between gages is observed to determine whether the application rate is less than, greater than, or equal to the infiltration rate.

The area selected for measurement of the application rate is where the applied water just disappears from the soil surface as the sprinkler jet returns to the spot. At the end of the test (after 1 hour), the amount of water caught in the gages is measured and the intake rate is calculated. The calculated rate of infiltration is equal to the limiting application rate that the soil system can accept without runoff.

Disadvantages of the technique are the time and expense involved in determining intake rates using a sprinkler infiltrometer. There is, in fact, little reason to try to measure maximum intake rates on soils that are going to be loaded far below these maximum rates, as is the case for most SR system designs. However, where economics dictate the use of application rates far in excess of the consumptive use (CU) of the proposed crop on soils of known or suspected hydraulic limitation, a test such as described

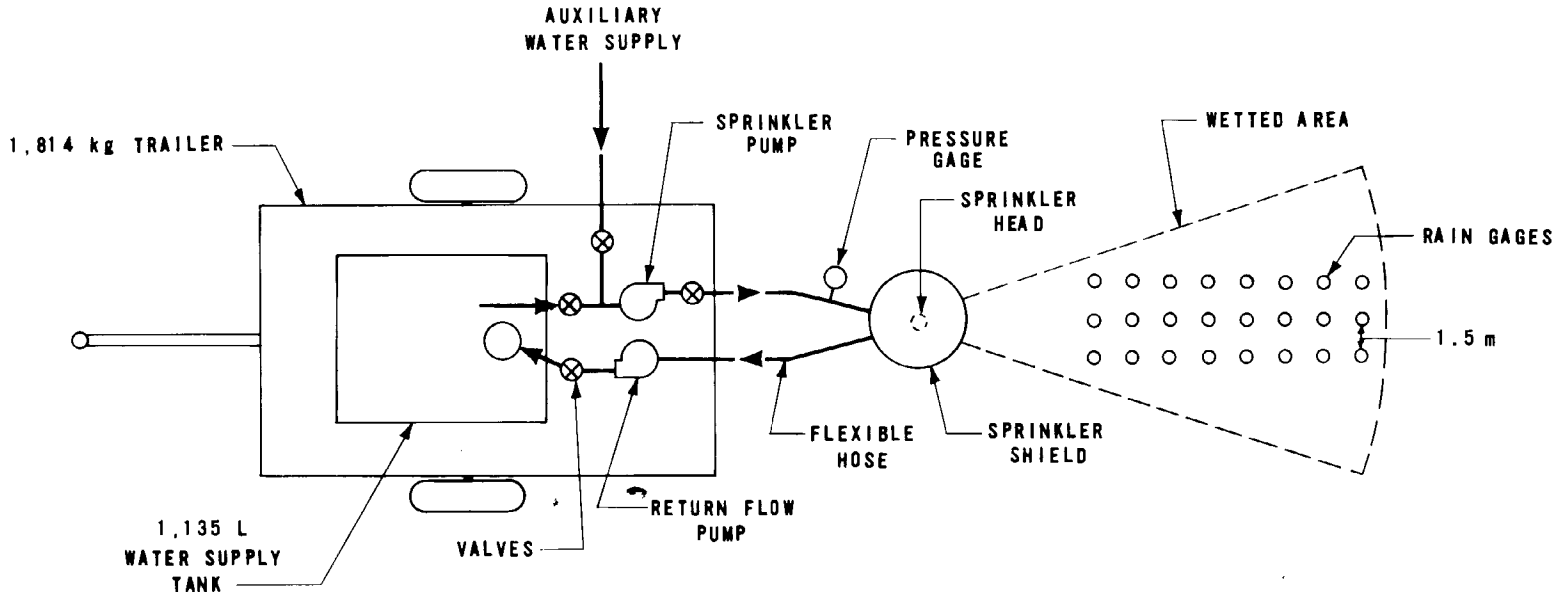

FIGURE 3-11
LAYOUT OF SPRINKLER INFILTROMETER [24]

above should be given careful consideration. Local SCS field personnel or irrigation specialists should be consulted for opinions on the advisability of making such tests.

3.5 Measurement of Vertical Hydraulic Conductivity

The rate at which water percolates through the soil profile during application depends on the "average" saturated conductivity (K_s) of the profile. If the soil is uniform, K is assumed to be constant with depth. Any differences in measured values of K are then due to normal variations in the measurement technique. Thus, average K may be computed as the arithmetic mean of n samples:

$$K_{am} = \frac{K_1 + K_2 + K_3 + \ldots + K_n}{n} \qquad (3\text{-}2)$$

where K_{am} = arithmetic mean vertical conductivity

Many soil profiles. approximate a layered series of uniform soils with distinctly different K values, generally decreasing with depth. For such cases, it can be shown that average K is represented by the harmonic mean of the K values from each layer [25]:

$$K_{hm} = \frac{D}{\frac{d_1}{K_1} + \frac{d_2}{K_2} + \ldots + \frac{d_n}{K_n}} \qquad (3\text{-}3)$$

where D = soil profile depth

d_n = depth of nth layer

K_{hm} = harmonic mean conductivity

If a bias or preference for a certain K value is not indicated by statistical analysis of field test results, a random distribution of K for a certain layer or soil region must be assumed. In such cases, it has been shown that the geometric mean provides the best estimate of the true K [25, 26, 27]:

$$K_{gm} = (K_1 \cdot K_2 \cdot K_3 \cdot \ldots \cdot K_n)^{1/n} \qquad (3\text{-}4)$$

where K_{gm} = geometric mean conductivity

The relationships between vertical hydraulic conductivity and the loading rates for RI systems are discussed in Section 5.4.1.

There are many in situ methods available to measure vertical saturated conductivity. For convenience, these may be divided into methods in the presence of and in the absence of a water table. In addition, there are several laboratory techniques which are used to estimate saturated conductivity in soil samples taken from pits or bore holes. Either constant-head or falling-head permeameters can be used for these estimates. Detailed test procedures may be found in any good soil mechanics text. The main criticisms of the use of laboratory techniques are the disturbance of the sample during collection by pushing or driving a sampler into it and the small size of sample tested. These criticisms are entirely valid. Nonetheless, when estimates of conductivity are needed from deep lying strata that physically cannot be examined in situ, then sampling and laboratory measurement may be the only feasible technique.

The only important test used below a water table is the pipe cavity, or piezometer tube method [28], described in practical terms in reference [29]. This test is especially helpful when the soils below the water table are layered, with substantially different vertical conductivities in each strata. In such cases, a separate test should be run in each of the layers of interest in order to apply Equation 3-3. The most important application occurs when there is evidence of vertical gradients that could transport percolate downward to lower lying aquifers.

Methods available to measure vertical saturated conductivity in a soil region above, or in the absence of a water table, include the ring permeameter [9, 30], the gradient-intake [1, 31], the double-tube [1, 30] and the air-entry permeameter [1, 32, 33]. With the development of the newer techniques, the ring permeameter method, which requires an elaborate setup and uses a lot of water per test, is no longer in widespread use. The gradient-intake technique is primarily used as a site screening method, for ranking the relative conductivities of different soils. Conductivity values obtained by this method are considered conservative as they often prove to be lower than those produced by other methods.

In practice, the double-tube and air-entry permeameters have found favor and are used more frequently than the other techniques. Therefore, only these two methods will be discussed. Enough information will be given here to enable the user to understand the basic measurement concepts.

Procedural details are covered more completely in the references supplied.

3.5.1 Double-Tube Method

The test is run in a hole augered to the depth of the soil layer whose vertical conductivity is desired. Certainly that of the most restrictive layer is needed as a minimum. Additional layers in the profile should be investigated to ensure proper characterization. The value of K which is computed from double-tube includes a small horizontal component but primarily reflects vertical flow. The apparatus (commercially available*) is shown in Figure 3-12. To perform a test, it is first necessary to create a saturated zone of soil beneath the embedded tubes. This is accomplished by applying water through both tubes for several hours. Then two sets of measurements are required:

1. Water level versus time readings for the inner tube with the supply to this tube stopped while maintaining the supply to the outer tube.

2. Water level versus time readings for the inner tube with the supply to this tube <u>and</u> to the outer tube stopped. The level in this outer tube is held (closely) the same as that in the inner tube during this second set of readings by manipulating a valve (C in Figure 3-12).

The curves of water level decreases versus time are then plotted to the same scale and K is calculated. Details of the calculation and curves needed to obtain a dimensionless factor for the calculation are to be found in references [1, 30] and are supplied by the manufacturer of the equipment.

3.5.2 Air-Entry Permeameter

The air-entry permeameter was devised to investigate the significance of flows in the capillary zone [32]. Using the device as shown in Figure 3-13, the soil-water pressure at which air entered the saturated voids was approximated.

---

*Soiltest, Inc., Evanston, Illinois 60202. Mention of proprietary equipment does not constitute endorsement by the U.S. Government.

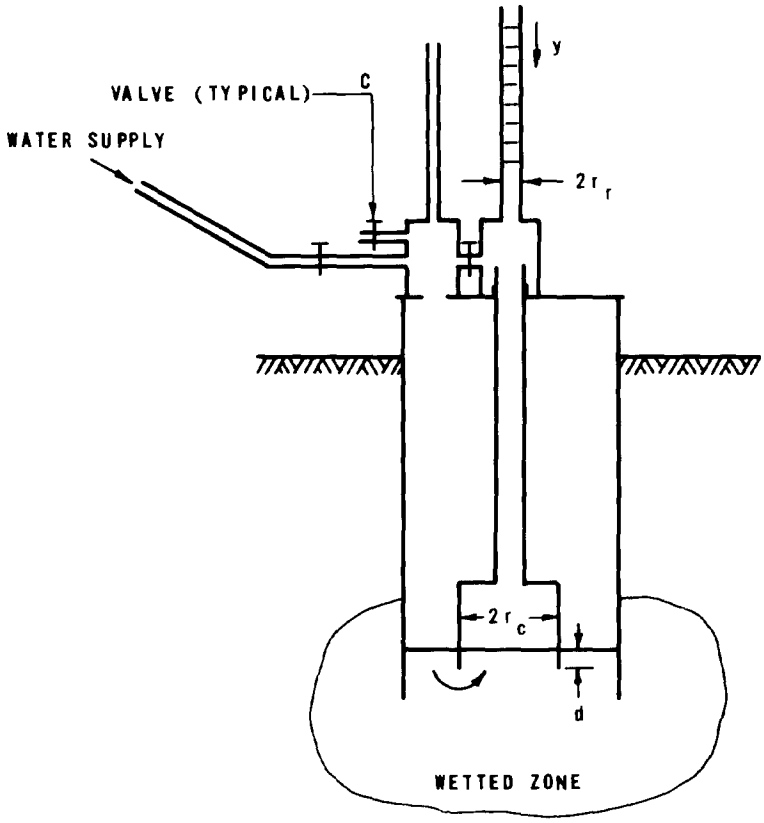

FIGURE 3-12
SCHEMATIC OF DOUBLE-TUBE APPARATUS [1]

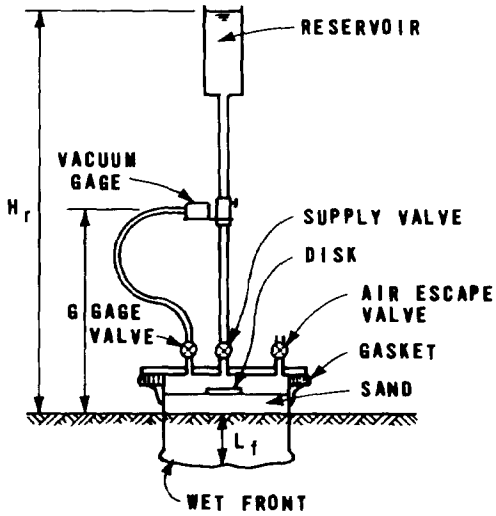

FIGURE 3-13
SCHEMATIC OF THE AIR-ENTRY PERMEAMETER [1,32]

Assuming a relationship between this value and the pressure just above the advancing front of a wetted zone, the conductivity of a mass of soil absorbing water to the point of saturation can be calculated. Because of the availability of research data to indicate that this conductivity value is closely equal to one-half the saturated hydraulic conductivity, a new method of determining vertical hydraulic conductivity at saturation became available.

Although the method may appear to have the limitation of requiring several assumptions, it compares favorably with other accepted methods and has some distinct advantages. The equipment is relatively simple; the test does not take much time; and, perhaps most important, not much water is required. A few liters of water will generally suffice for a single test.

In operation, water is added through the supply valve with the air valve open until the embedded cylinder becomes full (the function of the disk is to act as a splash plate). On filling the cylinder, the air valve is closed and water is allowed to infiltrate downward, the reservoir being kept full.

When the wet front, L_f, has reached the desired depth, dependent on soil texture and structure (see subsequent remarks), no more water is added to the reservoir. The drop in water level with time is measured in order to calculate an intake rate. Now the supply valve is closed and the pressure on the vacuum gage is noted periodically. At some point it will reach a maximum (minimum pressure) and then begin to decrease again. This minimum pressure corresponds closely to the air-entry pressure, P_a, of the wetted zone when corrected for gage height, G, and depth of wetted zone, L_f.

When the air-entry permeameter is employed at the soil surface, it is essentially an infiltrometer and as such could readily be listed with the method of Section 3.4.2. Several investigators [32, 33] have used the method to develop vertical conductivity profiles. It has been suggested that digging a trench with an inclined bottom, then moving the air-entry permeameter to selected points along the trench bottom is a good method of accomplishing this.

A criticism of the original technique [32] was based on the suggested methods of defining the depth of the wetted zone beneath the cylinder. These called for digging around the bottom of the cylinder after completion of the measurements to locate the wet front or using a metal rod to probe the soil, attempting to detect the depth at which penetration

resistance increases. However, the air-entry permeameter was modified by adding a fine tensiometer probe through the lid of the device. By setting the probe to correspond to the desired depth of wetted zone, L_f (about 15 cm or 6 in. in sand and 5 cm or 2 in. in massive clay), it was possible to detect the arrival of the wetted front during, rather than after operation of the permeameter. This modification also allows the method to be used in somewhat wetter soils than those previously required.

Referring to Figure 3-13, the vertical hydraulic conductivity of the "rewet" zone, i.e., the zone being saturated, is calculated from Equation 3-5.

$$K = \frac{Q}{A} \frac{L_f}{(H_r + L_f + H_1)} \qquad (3\text{-}5)$$

where: Q = volumetric intake rate through area, A, of the permeameter

H_1 = the matric potential of the soil just below the wetting zone, assumed to be 0.5 P_a. It is less than atmospheric pressure and therefore a negative quantity in Equation 3-5

P_a = air-entry value, calculated as $P_{min} + L_f + G$; also a negative pressure

P_{min} = minimum pressure (maximum vacuum) read from the vacuum gage after stopping the water supply

G = height of the vacuum gage above the soil surface

L_f = depth of the wetted zone

H_r = height of the water level in the reservoir above the soil surface

<u>Then, as stated previously, the vertical hydraulic conductivity at saturation is assumed to be two times the value of K as calculated from Equation 3-5</u>.

3.6 Ground Water

In most land treatment systems, and especially for the higher rate systems, interaction with the ground water is important and must be considered carefully in the

preliminary analysis phase. Problems with mounding, drainage, offsite travel and ultimate fate of contaminants in the percolate will have to be addressed during both the analysis and design phases. Early recognition of potential problems and analysis of mitigating measures are necessary for successful operation of the system. This cannot be accomplished without competent field investigation. Some key questions to be answered are:

1. How deep beneath the surface is the (undisturbed) water table?

2. How does the natural water table depth fluctuate seasonally?

3. How will the ground water table respond to the proposed wastewater loadings?

4. In what direction and how fast will the mixture of percolate and ground water move from beneath the area of application? Is there any possibility of transport of contaminants to deeper potable aquifers?

5. What will be the quality of this mixture as it flows away from the site boundaries?

6. If any of the conditions measured or predicted above are found to be unacceptable, what steps can be taken to correct the situation?

3.6.1 Depth/Hydrostatic Head

A ground water table is defined as the contact zone between the free ground water and the capillary zone. It is the level assumed by the water in a hole extended a short distance below the capillary zone. Ground water conditions are regular when there is only one ground water surface and when the hydrostatic pressure increases linearly with depth. Under this condition, the piezometric pressure level is the same as the free ground water level regardless of the depth below the ground water table at which it is measured. Referring to Figure 3-14, the water level in the “piezometer” would stand at the same level as the “well” in this condition.

In contrast to a well, a piezometer is a small diameter open pipe driven into the soil such that (theoretically) there can be no leakage around the pipe. As the piezometer is not slotted or perforated, it can respond only to the hydrostatic head at the point where its lower open end is located. The basic difference between water level measurement with a well

and hydrostatic head measurement with a piezometer is shown in Figure 3-14.

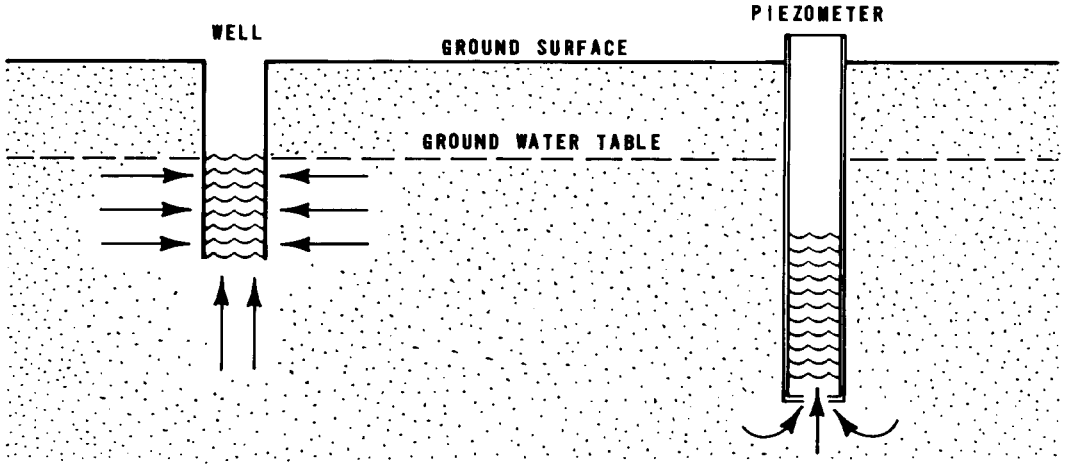

FIGURE 3-14
WELL AND PIEZOMETER INSTALLATIONS

Occasionally there may be one or more isolated bodies of water "perched" above the main water table because of lenses of impervious strata that inhibit or even prevent seepage past them to the main body of ground water below. Other "irregular" conditions are described by Figure 3-15.

Reliable determination of either ground water levels or pressures requires that the hydrostatic pressures in the bore hole and the surrounding soil be equalized. Attainment of stable levels may require considerable time in impermeable materials. This is called hydrostatic time-lag and may be from hours to days in materials of practical interest ($K > 10^7$ cm/s).

Two or more piezometers located together, but terminating at different depths, can indicate the presence, direction and magnitude (gradient) of components of vertical flow if such exists. Their use is indicated whenever there is concern about movement of contaminants downward to lower lying aquifers. Figure 3-15, taken from reference [34], shows several observable patterns with explanations. Descriptions of the proper methods of installation of both observation wells and piezometers may be found in references [9, 34].

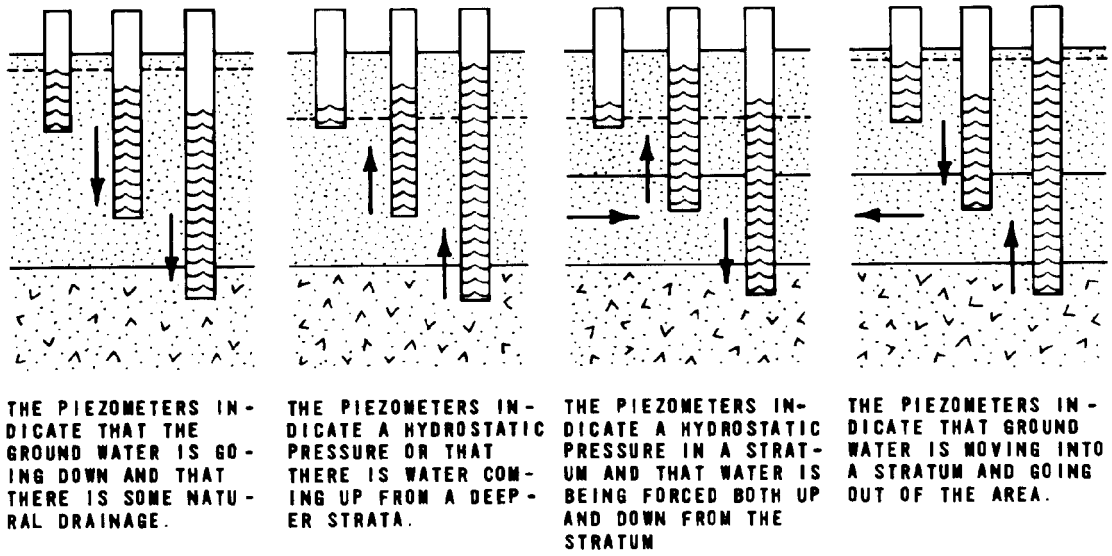

FIGURE 3-15
VERTICAL FLOWS INDICATED BY PIEZOMETERS [34]

3.6.2 Flow

Exact mathematical description of flows in the saturated zones beneath and adjacent to (usually downgradient) land treatment systems is a practical impossibility. However, for the majority of cases the possession of sufficient field data will allow an application of Darcy*s equation (Equation 3-1). Answers can thus be obtained which are satisfactory for making design decisions. In particular, there are questions which recur for each proposed project, and which may be approached in the manner suggested.

1. What volume of native ground water flows beneath the proposed site for dilution of percolate? This is a direct application of Equation 3-1. The width of the site measured normal to the ground water flow lines times the aquifer thickness equals the cross-sectional area used to compute the total flow.

2. What is the mean travel time between points of entry of percolate into the ground water and potential points of discharge or withdrawal? Again, Equation 3-1 is used to compute the flux, q. Dividing the flux by the aquifer porosity (Figure 3-3) gives an average ground water velocity. Travel time is computed as the distance between the two points of interest (they must both lie on the same flow line) divided by the average velocity.

3. What changes in hydraulic gradient (mound configuration) will be required to convey the proposed quantity of percolate away from beneath the area of application? Methods of answering this question are presented in Section 5.7.2.

The field data and hydrogeologic estimates required to answer these questions include:

1. Geometry of the flow system, including but not limited to

   a. Depth to ground water

   b. Depth to impermeable barrier; generally taken to be any layer which has a hydraulic conductivity less than 10% of that of the overlying deposits [35].

   c. Geometry of the recharge (application) area.

2. Hydraulic gradient — computed from water levels in several observation wells (assuming only horizontal flow), knowing distances between wells.

3. Specific yield (see Section 3.3.3). In some areas of the United States, the SCS has investigated the soil profiles sufficiently to provide an estimate of specific yield for a particular site [5].

4. Hydraulic conductivity in the horizontal direction. Field measurement of this parameter by the auger-hole method is covered in the following section.

3.6.2.1 Horizontal Hydraulic Conductivity

Horizontal conductivity cannot be assumed from a knowledge of vertical conductivity (Section 3.5). In field soils, isotropic conditions are rarely encountered, although they are frequently assumed for the sake of convenience. “Apparent” anisotropic conductivity often occurs in unconsolidated media because of interbedding of fine-grained and coarse-grained materials within the profile. Such interbedding restricts vertical flow much more than it does lateral flow [25]. Although the interbedding represents nonhomogeneity, rather than anisotropy, its effects on the conductivity of a large sample of aquifer material may be approximated by treating the “aquifer” as homogeneous but anisotropic. A considerable amount of data is available on the calculated or measured relationships between vertical and horizontal permeability for specific sites. The possible

spread of ratios is indicated in Table 3-5, which is based on field measurements in glacial outwash deposits (Sites 1-5) [36] and in a river bed (Site 6) [37]. Both authors claim, with justification, that the reported values would not likely be observed in any laboratory tests with small quantities of disturbed aquifer material.

TABLE 3-5
MEASURED RATIOS OF HORIZONTAL TO VERTICAL CONDUCTIVITY [36, 37]

Site	Effective horizontal permeability, K_h, m/d	K_h/K_v	Remarks
1	42	2.0	Silty
2	75	2.0	--
3	56	4.4	--
4	100	7.0	Gravelly
5	72	20.0	Near terminal moraine
6	72	10.0	Irregular succession of sand and gravel layers (from K measurements in field)
6	86	16.0	(From analysis of recharge flow system)

It is apparent that if accurate information regarding horizontal conductivity is required for an analysis, field measurements will be necessary. Of the many field measurement techniques available, the most useful is the auger hole technique [38]. Details of the test technique may also be found in [1, 9, 30, 34]. Although auger hole measurements are certainly influenced by the vertical component of flow, studies have demonstrated that the technique primarily measures the horizontal component [39]. A definition sketch of the measurement system is shown in Figure 3-16 and the experimental setup is shown in Figure 3-17. The technique is based on the fact that if the hole extends below the water table and water is quickly removed from the hole (by bailing or pumping), the hole will refill at a rate determined by the conductivity of the soil, the dimensions of the hole, and the height of water in the hole. With the aid of either formulas or graphs, the conductivity is calculated from measured rates of rise in the hole. The total inflow into the hole should be sufficiently small during the period of measurement to permit calculation of the conductivity based on an “average” hydraulic head. This is usually the case.

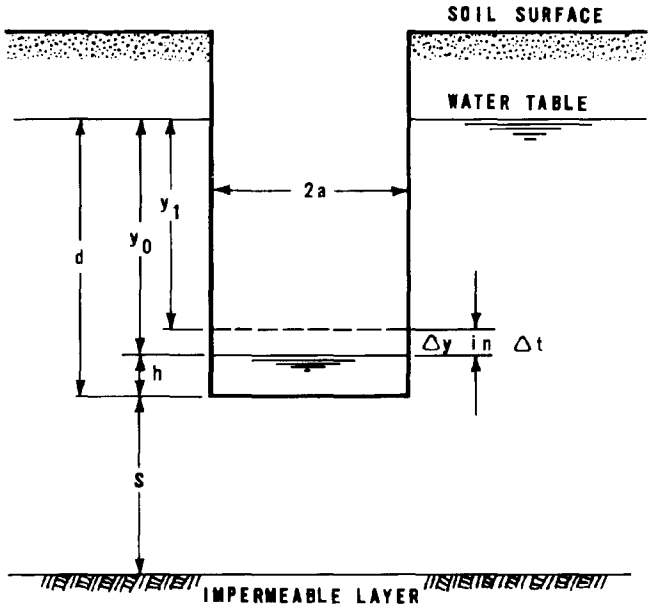

FIGURE 3-16
DEFINITION SKETCH FOR AUGER-HOLE TECHNIQUE

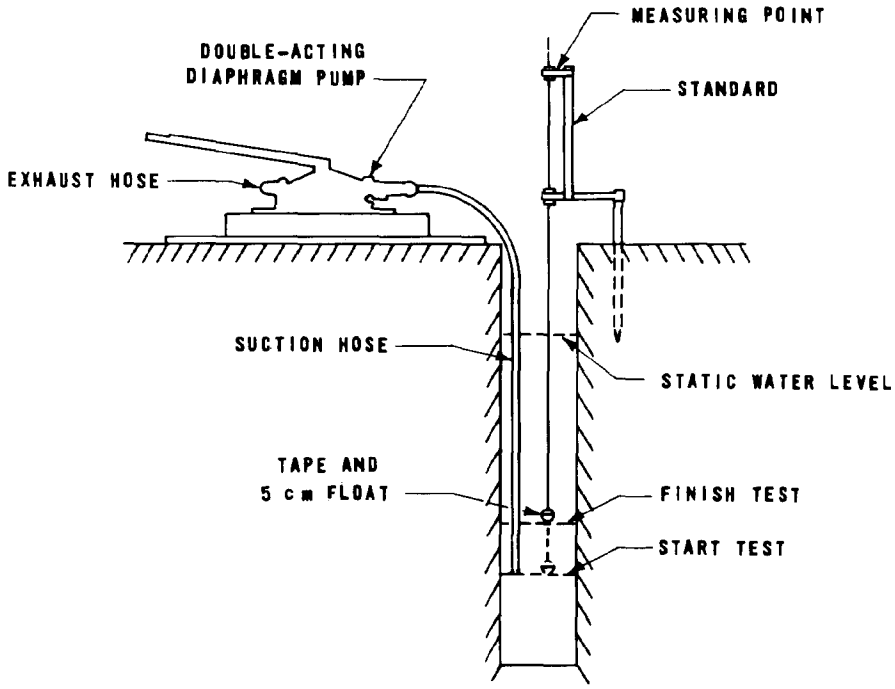

FIGURE 3-17
EXPERIMENTAL SETUP FOR AUGER-HOLE TECHNIQUE

In the formulas and graphs that have been derived, the soil is assumed to be homogeneous and isotropic. However, a modification of the basic technique [39] allows determination of the horizontal and vertical components (K_h and K_v in anisotropic soils by combining auger hole measurements with piezometer measurements at the same depth. If the auger hole terminates at (or in) an impermeable layer, the following equation applies (refer to Figure 3-16 for symbols):

$$K_h = 523{,}000a^2 \frac{\log_{10}(y_0/y_1)}{\Delta t} \qquad (3\text{-}6)$$

where a = auger hole radius, m

)t = time for water to rise y, s

K_h = horizontal conductivity, m/d

y_0, y_1 = depths defined in Figure 3-16, any units, usually cm

If an impermeable layer is encountered at a great depth below the bottom of the auger hole, the equation becomes:

$$K_h = \left(\frac{1{,}045{,}000\ da^2}{(2d + a)}\right) \cdot \left(\frac{\log_{10}(y_0/y_1)}{\Delta t}\right) \qquad (3\text{-}7)$$

where d = depth of auger hole, m

Charts for both cases are available in references [29, 34]. An alternative formula, claimed to be slightly more accurate, has been developed [40]. This equation employs a table of coefficients to account for depth of impermeable or of very permeable material below the bottom of the hole.

There are several other techniques for evaluating horizontal conductivity in the presence of a water table. Slug tests, such as described in reference [41] can be used to calculate K_h from the Thiem equation after observing the rate of rise water in a well following an instantaneous removal of a volume of water to create a hydraulic gradient. Pumping tests, which are already familiar to many engineers, would certainly provide a meaningful estimate. A comprehensive discussion of pumping tests, as well as other ground water problems is presented in reference [42] ; example problems

and tables of the mathematical functions needed to evaluate conductivity from drawdown measurements are also presented.

There are some limitations to full-scale pumping tests. The first is the expense involved in drilling and installation. Thus, if a well is not already located on the site, the pumping test technique would probably not be considered. If an existing production well fulfills the conditions needed for the technique to be valid, it should probably be used to obtain an estimate. However, this estimate may still require modification through the use of supplementary "point" determinations, especially if the site is very large or if the soils are quite heterogeneous.

Measurement of horizontal conductivity may occasionally be necessary in the absence of a water table. A typical case might involve the presence of a caliche layer or other hardpan formation near the surface. If the layer was restrictive enough to vertical flow, a perched water table would result upon application of wastewater. In such cases, the mound height analysis described in Section 5.7.2 should be used to determine whether perching would be a problem. Although mounding calculations are presented in Chapter 5 (dealing with RI), it is quite possible that mounding may occur beneath SR systems as well. The user of this manual should be aware of this possibility. The analysis requires an estimate of the horizontal conductivity. Either a modified version of the double-tube technique described in Section 3.5.1 [31] or the shallow well pump-in test [1, 9, 30] can be used to estimate K_h. The latter of these two testing methods is, in principle, the reverse of the auger-hole test.

3.6.2.2 Percolate/Ground Water Mixing

An analysis of the mixing of percolate with native ground water is needed for SR or RI systems that discharge to ground water if the quality of this mixture as it flows away from the site boundaries is to be determined. The concentration of any constituent in this mixture can be calculated as follows:

$$C_{mix} = \frac{C_p Q_p + C_{gw} Q_{gw}}{Q_p + Q_{gw}} \qquad (3\text{-}8)$$

where C_{mix} = concentration of constituent in mixture

C_p = concentration of constituent in percolate

Q_p = flow of percolate

C_{gw} = concentration of constituent in ground water

Q_{gw} = flow of ground water

The flow of ground water can be calculated from Darcy*s Law (Equation 3-1) if the gradient and horizontal hydraulic conductivity are known. This is not the entire ground water flow, but only the flow within the mixing depth. Relationships of the percolate flow and concentrations of constituents are discussed in Chapters 4 and 5. Equation 3-8 is valid if there is complete mixing between the percolate and the native ground water. This is usually not the case. Mixing in the vertical direction may be substantially less than mixing in the horizontal direction.

An alternative approach to estimating the initial dilution is to relate the diameter of the mound developed by the percolate to the diameter of the application area. This ratio has been estimated to be 2.5 to 3.0 [43, 44]. This ratio indicates the relative spread of the percolate and can be used to relate the mixing of percolate with ground water. Thus, an upper limit of 3 for the dilution ratio can be used when ground water flow is substantially (5 to 10 times) more than the percolate flow. If the ground water flow is less than 3 times the percolate flow, the actual ground water flow should be used in Equation 3-8.

3.6.3 Ground Water Quality

It is recommended that where a water table is known to exist that could possibly be impacted by the project, that baseline ground water quality data be collected. The details of number, location, depth, etc. of sampling wells are best left until after a preliminary hydrogeologic study of the site has been completed. Then following reasonably well established guidelines [23, 45, 46, 47], sampling wells may be designed in something approaching an optimum manner.

The parameters that should be measured in samples taken from the ground water are those specified under the “National Interim Primary Drinking Water Regulations” [48]. An exception is made for nondrinking water aquifers or where more stringent state regulations apply.

3.7 Soil Chemical Properties

The chemical composition of the soil is the major factor affecting plant growth and a significant determining factor in the capacity of the soil to renovate wastewater. There

are 16 elements known to be essential for crop growth. Three of these--nitrogen, phosphorus, and potassium--are deficient in many soils. Secondary and micronutrient deficiencies are found less often with sulfur, zinc, and boron being the most common. Soil pH and salinity can limit crop growth and sodium can reduce soil permeability. Chemical properties should be determined prior to design to evaluate the capacity of the soil to support plant growth and to renovate wastewater. Soils should be monitored during operation to avoid detrimental changes in soil chemistry.

3.7.1 Interpretation of Soil Chemical Tests

Several chemical properties, having nothing directly to do with nutrient status, are nonetheless important. Soil pH has a significant influence on the solubility of various compounds, the activities of various microorganisms, and the bonding of ions to exchange sites. Relative to this last phenomenon, soil clays and organic matter (known collectively as the soil colloids), are negatively charged. Thus, they are able to adsorb cations from the soil solution. Cations adsorbed in this way are called exchangeable cations. They can be replaced by other cations from the soil solution without appreciably altering the structure of the soil colloids. The quantity of exchangeable cations that a particular soil can adsorb is known as cation exchange capacity (CEC) and is measured in terms of milliequivalents per 100 grams (meq/100 g) of soil. The percentage of the CEC that is occupied by a particular cation is called the percent saturation for that cation. The sum of the exchangeable Na, K, Ca and Mg expressed as a percentage of the CEC is called percent base saturation.

There are optimum ranges for percent base saturation for various crop and soil type combinations. Also, for a given percent base saturation, it is desirable that Ca and Mg be the dominant cations rather than K and (especially) Na. High percentages of the alkali metals, in particular Na, will create severe problems in many fine-texture soils. The exchangeable sodium percentage (ESP) should be kept below 15% (Section 4.9.1.4). It is important to realize that regardless of the cation distribution in a natural soil, it can be altered readily as a result of agricultural practices. Both the quality of the irrigation water and the use of soil amendments, such as lime or gypsum, can change the distribution of exchangeable cations.

Another chemical property affecting plant growth is salinity, the concentration of soluble ionic substances. It is salinity in the soil solution in the root zone that is of primary interest. Unfortunately, there is no simple relation between this quantity and the salinity of the irrigation water, the salt balance being complicated by moisture transfers through evapotranspiration and deep percolation. The diagnostic tool usually employed is a check on the electrical conductivity (EC) of the irrigation water and the soil solution. Guidelines exist for various types of crops according to their salt tolerance. Procedures for computing the deep percolation (leaching requirement) needed to control root zone salinity are given in references [9, 29].

Because of the variable nature of the soil, few standard procedures for chemical analysis of soil have been developed. Several references that describe analytical methods are available [49, 50, 51]. A complete discussion of analytical methods and interpretation of results for the purpose of evaluating the soil nutrient status is presented in reference [521. The significance of the major chemical properties is summarized in Table 3—6.

3.7.2 Phosphorus Adsorption Test

Adsorption isotherms for phosphorus can be developed to predict the removal of phosphorus by the soil. Samples of soil are taken into the laboratory and are added to solutions containing known concentrations of phosphorus. Concentrations normally range from 1 to 30 mg/L. After the soil is mixed into the solutions and allowed to come into equilibrium for a period of time (up to several days), the solution is filtered and the filtrate is tested for phosphorus. The difference between the initial and final solution concentrations is the amount adsorbed for a given time. Details of the test are available in reference [53].

A procedure for using adsorption isotherm data to estimate phosphorus retention by soils is suggested in reference [47]. An important consideration discussed is the possibility of slow reactions between phosphorus and cations present in the soil which may “free up” previously used adsorption sites for additional phosphorus retention. Calculations involving adsorption isotherm data, which ignore these reactions, greatly underestimate phosphorus retention.

TABLE 3-6
INTERPRETATION OF SOIL CHEMICAL TESTS

Test result	Interpretation
pH of saturated soil paste	
<4.2	Too acid for most crops to do well
5.2-5.5	Suitable for acid-tolerant crops
5.5-8.4	Suitable for most crops
>8.4	Too alkaline for most crops, indicates a possible sodium problem
CEC, meq/100 g	
1-10	Sandy soils (limited adsorption)
12-20	Silt loam (moderate adsorption)
>20	Clay and organic soils (high adsorption)
Exchangeable cations, % of CEC	Desirable range
Sodium	≤5
Calcium	60-70
Potassium	5-10
ESP, % of CEC	
<5	Satisfactory
>10	Reduced permeability in fine-textured soils
>20	Reduced permeability in coarse-textured soils
EC, mmhos/cm at 25° of saturation extract	
<2	No salinity problems
2-4	Restricts growth of very salt-sensitive crops
4-8	Restricts growth of many crops
8-16	Restricts growth of all but salt-tolerant crops
>16	Only a few very salt-tolerant crops make satisfactory yields

3.8 References

1. Bouwer, H. Groundwater Hydrology. McGraw-Hill Book Co. New York. 1978.

2. Freeze, R.A., and J.A. Cherry. Groundwater. PrenticeHall. Englewood Cliffs, N.J. 1979.

3. Taylor, S.A. and Q.L. Ashcroft. Physical Edaphology. W.H. Freeman & Co. San Francisco. 1972.

4. Richards, L.A. Physical Condition of Water in Soil. In: Methods of Soil Analysis. Part 1, Agronomy 9. Black, C.A. (ed.). Madison, Wisconsin. American Society of Agronomy, Inc. 1965. pp. 131-136.

5. O*Neal, A.M. A Key for Evaluating Soil Permeability by Means of Certain Field Clues. In: Proceedings Soil Science Society of America. 16:312-315. 1952.

6. Jarrett, A.R. and D.D. Fritton. Effect of Entrapped Soil Air on Infiltration. Transcripts of American Society of Agricultural Engineers. 21:901-906. 1978.

7. Parr, J.F. and A.R. Bertrand. Water Infiltration into Soils. In: Advances in Agronomy. Norman, A.G. (ed.). New York, Academic Press. 1960. pp. 311-363.

8. Todd, D.K. Groundwater. In: Handbook of Applied Hydrology. Chow, V.T. (ed.). McGraw-\Hill Book Co. New York. 1964.

9. Drainage Manual. U.S. Department of the Interior, Bureau of Reclamation. 1st Edition. 1978.

10. Childs, E.C. An Introduction to the Physical Basis of Soil Water Phenomena. John Wiley and Sons, Ltd. London. 1969.

11. Duke, H.R. Capillary Properties of Soils — Influence upon Specific Yield. Transcripts of the American Society of Agricultural Engineers. 15:688-691. 1972.

12. Klute, A. Soil Water Flow Theory and its Application in Field Situations. In: Field Soil Water Regime. Special Publication, Series No. 5. Madison, Wisc., Soil Science Society of America. 1973. pp. 9-35.

13. Kirkham, D. and W.L. Powers. Advanced Soil Physics. New York, Wiley-Interscience. 1972. 534 p.

14. Burgy, R.H. and J.N. Luthin. A Test of the Single — and Double — Ring Types of Infiltrometers. Transcripts of American Geophysical Union. 37:189-191. 1956.

15. Manual of Septic Tank Practice. U.S. Public Health Service. Publication No. 526. U.S. Government Printing Office. 1969. 85 p.

16. Wallace, A.T., et al. Rapid Infiltration Disposal of Kraft Mill Effluent. In: Proceedings of the 30th Industrial Waste Conference, Purdue University, Indiana. 1975.

17. Abele, G., et al. Infiltration Characteristics of Soils at Apple Valley, Minn.; Clarence Cannon Dam, Mo.; and Deer Creek Lake, Ohio, Land Treatment Sites. Special Report 80-36. U.S. Army Cold Regions Research and Engineering Laboratory, Hanover, N.H. 1980. 52 p.

18. U.S. Army Corps of Engineers. Simplified Field procedures for Determining vertical Moisture Flow Rates in Medium to Fine Textured Soils. Engineer Technical Letter. 1980. 21 p.

19. Bouwer, H. Cylinder Infiltrometers. In: Monograph on Methods of Soil Analysis. American Society of Agronomy. (In press). 1981.

20. Haise, H.R., et al. The Use of Cylinder Infiltrometers to Determine the Intake Characteristics of Irrigated Soils. U.S. Dept. of Agriculture, Agric. Research Service. Public No. 41-7. 1956.

21. Hills, R.C. Lateral Flow Under Cylinder Infiltrometers. A Graphical Correction Procedure. Journal of Hydrology. 13:153-162. 1971.

22. Youngs, E.G. Two- and Three-Dimensional Infiltration: Seepage from Irrigation Channels and Infiltrometer Rings. Journal of Hydrology. 15:301-315. 1972.

23. Parizek, R.R. Site Selection Criteria for Wastewater Disposal — Soils and Hydrogeologic Considerations. In: Recycling Treated Municipal Wastewater and Sludge Through Forest and Cropland. Sopper, W.E. and L.T. Kardo (eds.).Pennsylvania State University Press. 1973. pp. 95-147.

24. Tovey, R. and C.H. Pair. A Method for Measuring Water Intake Rate Into Soil for Sprinkler Design. In: proceedings of the Sprinkler Irrigation Assoc. Open Technical Conference. 1963. pp. 109-118.

25. Bouwer, H. Planning and Interpreting Soil permeability Measurements. In: Proceedings American Society of Civil Engineers. Journal of the Irrigation and Drainage Division. 28:IR3:391-402. 1969.

26. Rogowski, A.S. Watershed Physics: Soil variability Criteria. Water Resources Research. 8:1015-1023. 1972.

27. Nielson, D.R., J.W. Biggar and K.T. Erb. Spatial variability of Field-Measured Soil-Water Properties.

Hilgardia. 42:215-259. 1973.

28. Frevert, R.K. and D. Kirkham. A Field Method for Measuring the Permeability of Soil Below a Water Table. In: Proceedings of Highway Research Board. 48:433-422. 1948.

29. Luthin, J.N. Drainage Engineering, Huntington, New York, R.E. Krieger Publ. Co. First edition — reprinted with corrections. 1973. 250 p.

30. Boersma, L. Field Measurement of Hydraulic Conductivity Above a Water Table. In: Methods of Soil Analysis. Part 1, Agronomy 9. Black, C.A. (ed). Madison, Wisconsin. American Society of Agronomy, Inc. 1965. pp. 234-252.

31. Bouwer, H. and R.C. Rice. Modified Tube Diameters for the Double-Tube Apparatus. In: Proceedings Soil Science Society of America. 31:437-439. 1967

32. Bouwer, H. Rapid Field Measurement of Air Entry value and Hydraulic Conductivity of Soil as Significant Parameters in Flow System Analysis. Water Resources Research. 2:729—738. 1966.

33. Topp, G.C. and M.R. Binns. Field Measurements of Hydraulic Conductivity with a Modified Air-Entry Permeameter. Canadian Journal Soil Science. 56:139-147.1976.

34. Drainage of Agricultural Land. U.S. Dept. of Agriculture - Soil Conservation Service National Engineering Handbook. Section 16. May 1971.

35. Van Beers, W.F.J. The Auger Hole Method - A Field Measurement of the Hydraulic Conductivity of Soil Below a Water Table. Wageningen, The Netherlands. International Inst. for Land Reclamation and Improvement, Bulletin 1. 1958.

36. Weeks, E.P. Determining the Ratio of Horizontal to vertical Permeability by Aquifer-Test Analysis. Water Resources Research. 5:196-214. 1969.

37. Bouwer, H. Ground Water Recharge Design for Renovating Waste Water. In: Proceedings of American Society of Civil Engineers, Journal of the Sanitary Engineering Division. 96:SA 1:59-73. 1970.

38. Van Bavel, C.H.M. and D. Kirkham. Field Measurement of Soil Permeability Using Auger Holes. In: Proceedings Soil Science Society of America. 13:90-96. 1948.

39. Maasland, M. Measurement of Hydraulic Conductivity by the Auger Hole Method in Anisotropic Soil. In: Proceedings Soil Science Society of America. 19:379-388. 1955.

40. Boast, C.W. and D. Kirkham. Auger Hole Seepage Theory. In: proceedings Soil Science Society of America. 35:365-373. 1971.

41. Bouwer, H. and R.C. Rice. A Slug Test for Determining Hydraulic Conductivity of Unconfined Aquifers with Completely or Partially Penetrating Wells. Water Resources Research. 12:423-428. 1976.

42. Glover, R.E. Ground-Water Movement. U.S. Bureau of Reclamation, Water Resources. Technical publication Engineering Monograph No. 31. 1964.

43. Singh, R. Prediction of Mound Geometry Under Recharge Basins. Water Resources Research. 12:775-780. 1976.

44. Marino, M.A. Artificial Groundwater Recharge, I. Circular-Recharging Area. Journal of Hydrology. 25:201-208. 1975.

45. Smith, J.L. et al. Mass Balance Monitoring of Land Application Sites for Wastewater Residuals. Transcript of American Society of Agricultural Engineers. 20:309-312. 1977.

46. Blakeslee, P. Monitoring Considerations for Municipal Wastewater Effluent and Sludge Application to the Land. In: proceedings of the Joint Conference on Recycling Municipal Sludges and Effluents on Land. Champaign, Illinois. 1973. pp. 183-198.

47. Loehr, R.C., et al. Land Application of Wastes, Vols. I & II. New York. van Nostrand Reinhold Co. 1979.

48. National Interim Primary Drinking Water Regulations. U.S. Environmental Protection Agency, Office of Water Supply. EPA-570/9-76-003. 1976. 159 p.

49. Black, C.A. (ed.). Methods of Soil Analysis, Part 2: Chemical and Microbiological Properties. Agronomy 9, American Society of Agronomy. Madison. 1965.

50. Richards, L.A. (ed.). Diagnosis and Improvement of Saline and Alkali Soil. Agricultural Handbook 60. U.S. Department of Agriculture. 1954.

51. Jackson, M.L. Soil Chemical Analysis. Englewood Cliffs, N.J. Prentice-Hall, Inc. 1958.

52. Walsh, L.M. and J.D. Beaton, (eds.). Soil Testing and Plant Analysis. Madison, Soil Science Society of America. 1973.

53. Fox, R.L. and E.J. Kamprath. Phosphate Sorption Isotherms for Evaluating the Phosphate Requirements of Soil. In: Proceedings Soil Science Society of America. 34:902-906. 1970.