APPENDIX A

SLOW RATE DESIGN EXAMPLE

A.1 Introduction

This design example is presented to illustrate the procedures described in Chapter 4 for the preliminary design of slow rate (SR) systems. The example is detailed enough to allow cost comparison with other alternatives. The focus of this example is on determining the major design variables in land treatment systems including crop selection, hydraulic loading rate, land area requirements, storage requirements, and application method. Supplemental components such as pumping and headworks requirements are discussed briefly and listed for cost comparison purposes.

A.2 Statement of Problem

A.2.1 Background

City A is located in central Missouri in an area characterized by fertile soils and intensive farming. Rainfall is more plentiful than is needed for most crops, but is distributed unevenly during the year. Supplemental irrigation is beneficial to most crops in summer.

The existing wastewater treatment facility consists of a single stage trickling filter with anaerobic digestion and sludge drying beds. The facility is in poor structural condition and unable to meet present NPDES permit requirements.

A.2.2 Population and Wastewater Characteristics

Population and wastewater characteristics are presented in Table A-l. Industrial flows are expected to be nontoxic and biodegradable.

A.2.3 Discharge Requirements

Surface discharge of wastewater is prohibited for streams in the area, and the ground water aquifer is used as a drinking water source so drinking water quality will be expected at the project boundary.

TABLE A-l
POPULATION AND WASTEWATER CHARACTERISTICS

Design year	2005
Population	18,900
Average annual flow, m^3/d	
Industrial	416
Municipal	7,154
Total	7,570
Maximum monthly avg flow, m^3/d	9,085
Infiltration into sewers	None (nonexcessive)
Wastewater strength, mg/L	
BOD_5	200
SS	200
Total nitrogen, mg/L (as N)	38
Total phosphorus, mg/L (as P)	8

A.2.4 Site Characteristics

The proposed site for the treatment facility is shown in Figure A-l. The site was chosen because of its isolation from population centers, its location downwind from the city, and the availability of flat, well-drained soils in the area. According to an old SCS map, shown in Figure A-l, Bosket fine sandy loam dominates the treatment site and Cooter silty clay dominates the treatment pond site. Both areas have 0 to 1% slope.

A.2.5 Climate

The area is subject to frequent changes in weather with no prolonged periods of very cold or very hot weather. The last freeze is usually in late March and the first freeze in early November.

Climatic data, obtained from the National Oceanic and Atmospheric Administration*s Climatography of the United States, are shown in Table A-2 for the nearest United States No. 20 recording station to City A. The data represent the worst year in 5 for monthly average precipitation and temperature.

TABLE A-2
CLIMATIC DATA FOR THE WORST YEAR IN 5

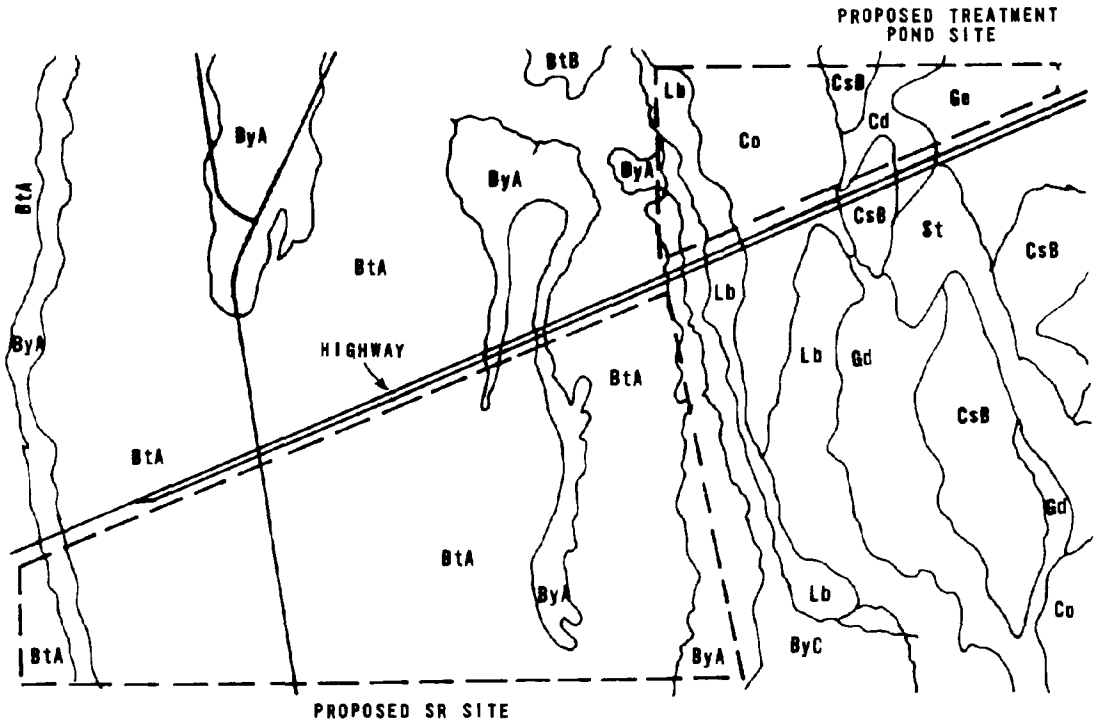

Predominant soil series	Map symbol	Depth to seasonal high water table, m	Depth from surface, cm	Dominant USDA texture	Permeability, cm/h
Bosket	BtA, BtB	>1.5	0-64	Fine sandy loam	5-15
			64-147	Clay loam and sandy clay loam	1.5-5
			147-198	Fine sandy loam and sand	5-15
Broseley	ByA, ByC	>1.5	0-94	Loamy fine -and	15-51
			94-160	Fine sandy loam	5-15
			160-190	Loamy fine sand	15-51
Canalou	Cd	0.6-0.9	0-51	Loamy sand	15-51
			51-122	Sandy loam	15-51
			122-160	Sand	15-51
Cooter	Co	0.6-0.9	0-38	Silty clay	0.15-0.5
			38-152	Loamy sand and sand	15-51
Crevasse	CsB	>1.0	0-25	Loamy sand	15-51
			25-152	Sand	15-51
Gideon	Gd, Ge	0-0.3	0-114	Loam	1.5-5
			114-173	Clay loam	1.5-5
Lilbourn	Lb	0-0.5	0-94	Fine sandy loam	5-15
Sikeston	St	0-0.3	0-30	Sandy clay loam	1.5-5

FIGURE A-1
SOILS MAP

TABLE A-2
CLIMATIC DATA FOR THE WORST YEAR IN 5

Month	Temperature °C Mean	Mean daily, minimum	Days with mean temperature, ≤-4 °C	Total precipitation, cm
Jan	-0.7	-6.6	20	10.1
Feb	-0.9	-8.1	15	10.4
Mar	1.3	-5.6	12	15.1
Apr	12.7	4.6	0	15.8
May	16.7	8.3	0	17.4
Jun	21.1	13.9	0	14.2
Jul	24.1	16.7	0	14.0
Aug	24.4	15.9	0	12.2
Sep	19.8	9.6	0	14.7
Oct	11.9	0.2	4	9.9
Nov	4.6	-3.1	12	14.8
Dec	-0.1	-6.6	17	13.0
Annual			80	162

A.3 Slow Rate System Selection

The selection of the type of land treatment process is dictated by site conditions, climate, and regulatory requirements. In the case of City A, the prohibition of surface discharge eliminated overland flow from consideration. The limit of 10 mg/L nitrate in the ground water, coupled with the high ground water table, eliminated rapid infiltration as an alternative. The SR process appeared feasible based on land availability, soil permeability, and climate.

A.3.1 Preapplication Treatment

The existing treatment facilities cannot be used for preapplication treatment without extensive rehabilitation. Consequently, treatment prior to land application is to be provided by a series of treatment/storage ponds. The primary cell is designed according to state standards: BOD loading equals 38.1 kg/ha·d (34 lb/acre·d) with an operating depth of 1.0 m. The secondary cell is designed for storage.

A.3.2 Crop Selection

As discussed in Section 4.3, the crop selected for the SR process depends on whether the objective is crop production for revenue or minimization of land area by maximizing hydraulic loading rates. For City A, the objective is to minimize land area. Based on the selection criteria in Chapter 4 and conversations with the local farm advisor, City A chose to evaluate water tolerant forage grasses and deciduous forest as two possible crops in an SR system. The proposed site shown in Figure A-l would be used for either crop.

A.4 System Design

A.4.1 Forage Crop Alternative

Minimizing land area requires the use of the maximum allowable hydraulic loading rate which is governed either by soil permeability or nitrogen loading. Once the hydraulic loading rate is determined, field area and storage requirement are obtained.

A.4.1.1 Hydraulic Loading Based on Soil Permeability

The general water balance equation is used to determine the allowable hydraulic loading based on soil permeability (Section 4.5.1) and is shown as:

$$L_w = ET - Pr + P_w \qquad (4\text{-}3)$$

where Lw = wastewater hydraulic loading rate, cm/unit time

ET = evapotranspiration rate, cm/unit time

Pr = precipitation rate, cm/unit time

P_w = percolation rate, cm/unit time

The computation is performed on a monthly basis in the form of a water balance table shown in Table A-3. The procedure follows that presented in Section 4.5.1 and is outlined below:

1. Design precipitation for each month is based on a 5-year return period and is obtained from climatic data (Table A-2). The frequency analysis is performed

according to standard procedures available in most hydrology texts or reference books. The precipitation values are entered in Column (1).

2. Estimated monthly evapotranspiration (ET) values for the forage grass are obtained from the local Cooperative Extension Service and are entered in Column (2).

3. The net ET for each month is determined by subtraction of Column (1) from Column (2).

4. The maximum design percolation rate is based on 4% of the minimum permeability in the soil profile--1.5 cm/h 0.6 in./h). A value of 4% is used because it is necessary to be conservative for preliminary design. Further optimization will be possible during final design. The limiting permeability is 1.5 cm/h in the clay loam layer at 64 cm (25 in.) in the Bosket soils (Figure A-l). The maximum daily percolation rate is computed as follows:

$$P_w \text{ (daily)} = 0.04\ (1.5 \text{ cm/h})(24 \text{ h/d})$$
$$= 1.44 \text{ cm/d}$$

The monthly rate is then determined by multiplying the daily rate by the number of operating days during the month. Some months may have nonoperating days due to farming operations or cold weather.

Green chop harvesting is planned for this system such that downtime for harvesting will not be necessary. Operation will stop on days when the mean temperature is less than -4 °C (25 °F). Based on the climatic data in Table A-2, nonoperating days due to cold weather are expected during the months of October through March.

For example, in January, the design percolation rate is:

$$\text{Operating days} = 31 - 20 = 11 \text{ d}$$

$$P_w \text{ (Jan)} = (1.44 \text{ cm/d})(\text{ll d/mo})$$

$$= 15.8 \text{ cm/mo}$$

The design percolation rate for each month is entered in Column (4).

5. The allowable hydraulic loading rate for each month is computed by adding Column (3) and Column (4). The annual hydraulic loading rate is computed by summing the monthly rates and equals 326 cm (128 in.).

TABLE A-3
HYDRAULIC LOADING RATES BASED ON SOIL PERMEABILITY: FORAGE CROP ALTERNATIVE
cm

Month	(1) Precipitation Pr	(2) Evapo-transpiration ET	(3) ET - Pr (2)-(1)	(4) Percolation P_w	(5) Hydraulic Loading $L_{w(P)}$ (3)+(4)
Jan	10.1	0.3	-9.8	15.8	6.0
Feb	10.4	0.7	-9.7	18.7	9.0
Mar	15.1	2.1	-13.0	27.4	14.4
Apr	15.8	5.6	-10.2	43.2	33.0
May	17.4	9.7	-7.7	44.6	36.9
Jun	14.3	13.4	-0.9	43.2	42.3
Jul	14.1	15.7	1.6	44.6	46.2
Aug	12.3	13.9	1.6	44.6	46.2
Sep	14.7	8.9	-5.8	43.2	37.4
Oct	9.9	5.0	-4.9	38.9	34.0
Nov	14.8	1.8	-13.0	25.9	12.9
Dec	13.0	0.6	-12.4	20.2	7.8
Annual	162	78	-84	410	326

A.4.1.2 Hydraulic Loading Based on Nitrogen Loading

The annual hydraulic loading rate based on nitrogen is determined by using equation 4-4, shown below:

$$L_{w(n)} = \frac{(C_p)(Pr - ET) + (U)(10)}{(1 - f)(C_n) - C_p} \qquad (4\text{-}4)$$

where $L_{w(n)}$ = allowable annual hydraulic loading rate based on nitrogen limits, cm

C_p = percolate nitrogen concentration, mg/L

Pr = design precipitation, cm/yr

ET = evapotranspiration rate, cm/yr

U = crop nitrogen uptake, kg/ha·yr

f = fraction of applied nitrogen removed by volatilization, denitrification, and storage

C_n = applied wastewater nitrogen concentration, mg/L

The computation was performed using annual rates according to the procedure presented in Section 4.5.2 and is outlined as follows:

1. Determine parameter values for Equation 4-4.

   a. Crop uptake (U)

      U = 224 kg/ha·yr (from Table 4-11)

   b. Volatilization + denitrification + storage (V + D + S)

      f = 0.2 (estimated, Section 4.2.2)

   c. Applied nitrogen concentration (C_n)

      Compute reduction in nitrogen concentration during storage based on a 53 day storage period which is the minimum detention time in the treatment/storage ponds (Table A-7).

      $C_n = (38 \text{ mg/L})e^{-0.0075(53)}$

      = 26 mg/L

   d. Percolate nitrogen concentration (C_p)

      C_p = 10 mg/L (required)

2. Solve Equation 4-4.

$$L_{w(n)} = \frac{10(84) + 224(10)}{(1 - 0.2)(26) - 10}$$

$$= 285 \text{ cm/yr } (112 \text{ in./yr})$$

A.4.1.3 Design Hydraulic Loading Rate

As shown in Sections A.4.1.1 and A.4.1.2, the allowable annual hydraulic loading rate based on soil permeability is 326 cm (128 in.) and the rate based on nitrogen limits is 285 cm (112 in.). Since nitrogen loading limits the hydraulic loading rate in this example, the allowable hydraulic loading rate is determined by comparing monthly Lw(p) and Lw (n).

Monthly hydraulic loading rates based on nitrogen limits are determined using Equation 4-4 with monthly values for Pr and ET obtained from Table A-3. Sufficient data on nitrogen uptake versus time for forage crops were not available, requiring monthly values for U to be estimated from the ratio of monthly ET to the total growing season ET multiplied by the annual crop uptake value (Table A-4, Column 2).

TABLE A-4
DESIGN HYDRAULIC LOADING RATE

Month	(1) Pr-ET, cm	(2) U, kg/ha	(3) $L_{w(n)}$, cm	(4) $L_{w(P)}$, cm	(5) Design L_w, cm
Jan	9.8	0.9	9.9	6.0	6.0
Feb	9.7	2.0	10.8	9.0	9.0
Mar	13.0	6.1	17.7	14.4	14.4
Apr	10.2	16.1	24.4	33.0	24.4
May	7.7	28.0	33.0	36.9	33.0
Jun	0.9	38.5	36.5	42.3	36.5
Jul	-1.6	45.3	40.5	46.2	40.5
Aug	-1.6	40.1	35.6	46.2	35.6
Sep	5.8	25.7	29.2	37.4	29.2
Oct	4.9	14.4	17.9	34.0	17.9
Nov	13.0	5.2	16.9	12.9	12.9
Dec	12.4	1.7	13.1	7.8	7.8
Annual					267

The monthly values of $L_{w(n)}$ and $L_{w(p)}$ are compared with the lower value used for the monthly design hydraulic rate (Table A-4, Column 5). Summing the design monthly hydraulic loading rate gives the design annual hydraulic loading rate, 267 cm (105 in.).

A.4.1.4 Field Area Requirements

The design annual hydraulic loading rate is used to determine the field area requirement:

$$A_w = \frac{Q(365) + \Delta V_s}{10^4 \ (L_w)} \qquad (4\text{-}6)$$

where A_w = field area, ha

Q = average daily flow, m^3/d

ΔV_s = net gain or loss in stored wastewater volume due to precipitation, evaporation, and seepage at storage pond, m^3/yr

L_w = design annual hydraulic loading rate, m/yr

For the first calculation of field area, ΔV_s is assumed zero (see Section A.4.1.6) and the field area is calculated as:

$$A_w = \frac{7{,}570 \ m^3/d \ (365 \ d/yr)}{(10^4 m^2/ha)(2.67 \ m/yr)} = 103.4 \ ha$$

A.4.1.5 Storage Requirements

Storage of wastewater is required for periods when available wastewater exceeds design hydraulic loading rate. A water balance computation is used to estimate the storage requirement. The procedure is outlined as follows:

1. Enter the design monthly loading rates from Table A-4 (Column 5) into Table A-5, Column 1.

2. Determine available wastewater for each month.

$$W_a = \frac{Q(D)(0.01)}{A_w}$$

where W_a = monthly available wastewater, cm/mo

Q = average daily flow, m^3/d

D = days per month

A_w = field area, ha

The average daily flow is assumed constant. For example the monthly wastewater available for June is:

$$W_{a\ June} = \frac{(7{,}570\ m^3/d)(30\ d/mo)(0.01)}{103.4\ ha}$$

$$= 22.0\ cm/mo$$

The monthly values of available wastewater are entered in Column (2) of Table A-5.

TABLE A-5
STORAGE VOLUME DETERMINATION:
FORAGE CROP ALTERNATIVE
cm

Month	(1) Hydraulic loading, L_w	(2) Wastewater available, W_a	(3) Change in storage, (2)-(1)	(4) Cumulative storage, S_c
Sep	29.2	22.0	-7.2	0.2[a]
Oct	17.9	22.7	4.8	4.8
Nov	12.9	22.0	9.1	13.9
Dec	7.8	22.7	14.9	28.8
Jan	6.0	22.7	16.7	45.5
Feb	9.0	20.5	11.5	57.0
Mar	14.4	22.7	8.3	65.3
Apr	24.4	22.0	-2.4	62.9
May	33.0	22.7	-10.3	52.6
Jun	36.5	22.0	-14.5	38.1
Jul	40.5	22.7	-17.8	20.3
Aug	35.6	22.7	-12.9	7.4

a. Rounding error, assume zero.

3. Compute the change in storage each month by subtracting hydraulic loading [Column (1)] from available wastewater [Column (2)]. Enter the results in Column (3).

4. Compute the cumulative change in storage in the end of each month by adding the change in storage in Column (3) to the accumulated quantity from the previous month in Column (4).

5. Compute the required total storage volume using the maximum cumulative storage in Column (4) and the estimated field area:

$$V_s = S_c A_w$$

$$= (65.3 \text{ cm})(103.4 \text{ ha})(10^2 \text{ m}^3/\text{cm}\cdot\text{ha})$$

$$= 675{,}200 \text{ m}^3$$

A.4.1.6 Final Storage and Pond Design

The facultative pond for preapplication treatment serves as the storage reservoir. A two-cell pond system is selected with the design criteria of the primary cell based on the state*s BOD loading criteria of 38.1 kg BOD/ha·d (34 lb/acre·d) and an operating depth of 1.0 m.

$$A_p = \text{area (primary)}$$

$$= \frac{(7570 \text{ m}^3/\text{d})\ (200 \text{ mg/L})\ (10^{-6} \text{ kg/mg})\ (10^3 \text{ L/m}^3)}{38.1 \text{ kg/ha}\cdot\text{d}}$$

$$= 39.7 \text{ use } 40 \text{ ha}$$

$$V_p = \text{volume (primary)}$$

$$= (40 \text{ ha})\ (10^4 \text{ m}^2/\text{ha})\ (1.0 \text{ m})$$

$$= 400{,}000 \text{ m}^3$$

The storage volume in the second cell is the difference between the required total storage and the volume of the primary cell.

$$V_{sec} = V_s - V_p$$
$$= 675{,}200 - 400{,}000$$
$$= 275{,}200 \text{ m}^3$$

The actual volume of the secondary pond will change due to evaporation, precipitation and seepage in the two cell pond

area. To obtain the final storage volume the following steps are used.

1. Calculate the storage area of the second cell using a volume of 275,200 m^3 and an operating depth of 1.5 m.

$$A_{sec} = \frac{V_{sec}}{d_s} \qquad (4\text{-}8)$$

$$= \frac{275{,}200}{1.5}$$

$$= 183{,}500\ m^2 \quad \text{use 18 ha}$$

2. Determine the monthly net gain or loss in storage volume due to precipitation, evaporation, and seepage (Table A-6, Column 3). Annual lake evaporation equals 89 cm (33 in.) and is distributed monthly in the same ratios of monthly ET to annual ET. A maximum seepage rate of 0.15 cm/d is allowed by state standard. As an example, the net gain or loss for July is:

$$\Delta V_{s_{July}} = (\text{Precipitation} - \text{evaporation} - \text{seepage})$$

$$\times\ (\text{surface area})$$

$$= (14.1 - 18.0 - 4.6)(58\ \text{ha})$$

$$\times\ [(10^2\ \text{m/cm})\ (10^4\ \text{m}^2/\text{ha})]$$

$$= -49{,}300\ m^3$$

3. Tabulate the volume of wastewater available each month, In this example, the daily flow is assumed constant and monthly flows vary according to the number of days per month (Table A-6, Column 4).

$$Q_{m_{July}} = (7{,}570\ m^3/d)(31\ d)$$

$$= 234.7 \times 10^3\ m^3/mo$$

4. Determine the adjusted field area accounting for the net gain from storage.

$$A_w' = \frac{\Sigma \Delta V_s + \Sigma Q_m}{(L_w)(10^4\ m^2/ha)} \qquad (4\text{-}10)$$

$$A_w' = \frac{(108.0 + 2{,}763.3)(10^3\ m^3)}{2.67\ m\ (10^4)}$$

$$= 107.5\ ha\ (266\ acres)$$

TABLE A-6
FINAL DETERMINATION OF STORAGE VOLUME

Month	(1) Evaporation, cm	(2) Seepage, cm	(3) Net gain/loss ΔV_s $m^3 \times 10^3$	(4) Available wastewater Q_m, $m^3 \times 10^3$	(5) Applied wastewater V_w, $m^3 \times 10^3$	(6) Change in storage[b] $m^3 \times 10^3$	(7) Cumulative storage Sc, $m^3 \times 10^3$
Sep	10.2	4.5	0	227.1	313.9	-86.8	85.7
Oct	5.7	4.6	-2.3	234.7	192.4	40.0	-1.1[a]
Nov	2.1	4.5	47.6	227.1	138.7	136.0	40.0
Dec	0.7	4.6	44.7	234.7	83.8	195.6	176.0
Jan	0.3	4.6	30.2	234.7	64.5	200.4	371.6
Feb	0.8	4.2	31.3	212.0	96.8	146.5	572.0
Mar	2.4	4.6	47.0	234.7	154.8	126.9	718.5
Apr	6.4	4.5	28.4	227.1	262.3	-6.8	845.4[b]
May	11.1	4.6	9.9	234.7	354.7	-110.0	838.6
Jun	15.3	4.5	-31.9	227.1	392.4	-197.2	728.5
Jul	18.0	4.6	-49.3	234.7	435.4	-250.0	531.3
Aug	15.9	4.6	-47.6	234.7	382.7	-195.6	281.3
Annual			108.0	2,763.3	2,872.4		

a. Rounding error, assume zero.
b. Design storage volume

5. Calculate the monthly volume of applied wastewater (Table A-6, Column 5) using the design monthly hydraulic loading rate and adjusted field area. For example:

$$V_{w_{July}} = (L_{w_{July}})(A_w')(10^4\ m^2/ha)(10^{-2}\ m/cm) \quad (4\text{-}11)$$

$$= (40.5\ cm)(107.5\ ha)(10^2)$$

$$= 435.4 \times 10^3\ m^3$$

6. Determine the net change in storage each month (Table A-6, Column 6) based on monthly applied wastewater, V_w, available wastewater, Q_m, and net storage gain/loss, ΔV_s.

$$\text{Change in storage} = Q_m + \Delta V_s - V_w$$

7. Calculate the cumulative storage volume for the end of each month (Column 7) to determine the maximum design storage volume.

$$V_s = 845{,}400 \text{ m}^3$$

8. Adjust the depth of the second cell to accommodate the increased storage volume.

$$V_{sec} = 845{,}400 - 400{,}000 = 445{,}400$$

$$d_s = \frac{V_{sec}}{A_{sec}} = \frac{445{,}400 \text{ m}^3}{180{,}000 \text{ m}^2} \qquad (4\text{-}12)$$

$$= 2.47 \text{ m, use } 2.5 \text{ m.}$$

The depth of ground water prevents lowering the depth of the pond more than 1.5 m (5 ft) below the ground surface. Consequently, most of the storage pond volume will be above ground surface and require embankments. The design criteria for the storage lagoons are shown in Table A-7.

TABLE A-7
DESIGN CRITERIA FOR STORAGE LAGOONS:
FORAGE CROP ALTERNATIVE

Primary cell	
Surface area, ha	40.0
Total depth, m	1.5
Operating depth, m	1.0
Total storage, d	79
Storage above 0.5 m, d	53
Secondary cell	
Surface area, ha	18.0
Total depth, m	3.0
Operating depth, m	2.5
Total storage at 2.5 m, d	59
Total storage at operating depth	
Days	112
m^3	850,000

A.4.1.7 Distribution and Application

When selecting the type of distribution system, the designer must consider the terrain, crop, soils, and capital and operation/maintenance costs. Based on a cost comparison not included in the example, the designer recommended a center pivot irrigation system as the most cost-effective system for the forage crop alternative.

The design of the distribution system is based on the maximum hydraulic loading rate per application. In this case, the maximum monthly loading equals 40.5 cm (15.9 in.) in July. An application frequency of four times per month is selected to allow adequate drying between applications (see Appendix E for guidelines on making this determination). The hydraulic loading rate per application then equals 10.1 cm (4.0 in.).

In consultation with manufacturers of center pivot equipment, it was determined that two center pivot systems could be used for distribution each irrigating an area of 53.8 ha and using a revolution period of 170 hours. The unit capacity is then determined as follows (Section E.2.6):

$$Q = CAD/t$$

$$= \frac{28.1\ (53.8)(10.1)}{170}$$

$$= 89.8\ L/s$$

where Q = discharge capacity, L/s (gal/mm)

C = constant, 28.1 (453)

A = field area for one center pivot, ha (acre)

D = hydraulic loading/application depth, cm (in.)

t = number of operating hours per application

Using the unit capacity, the design of the center pivot system is completed. In order to determine the nozzle and pipeline size, the design must consider headlosses in the line and the pressure required to ensure proper operation of the nozzles.

Unit capacity also is used to develop design criteria for the pumps. Pumps are required to deliver wastewater to the site and at a pressure sufficient to allow proper distribution of

the wastewater. Assuming the two pivots operate simultaneously, the pumps are sized for a total flow of 179.6 L/s. The designer chose four pumps and one standby rated at 45 L/s. The force main is sized using a maximum velocity of 1.7 m/s and the following formula:

$$A = Q_t/V$$

where A = area of pipe

Q_t = total flow

V = maximum velocity

For circular pipes:

$$D = \sqrt{\frac{4Q}{\pi V}}$$

where D = pipe diameter

Applying the equation gives:

$$D = \sqrt{\frac{(180.L/s)(10^{-3}\ m^3/L)}{1.7\ m/s}\ \frac{(4)}{\pi}} = 0.37\ m,\ \text{use } 0.38\ m$$

A final consideration in the design of the center pivot system is the disruption of the tracking system due to wet soil conditions. Because of the pivot rotational speed, the application rate at the unit capacity equals 1.0 cm/h during the 9 to 10 h period it takes to pass a given point. Although this rate is less than the permeability or basic infiltration rate of the surface soil, precautions need to be taken. These precautions include preparing the tracking route by either soil compaction or gravel installation.

A summary of design data for the treatment site is given in Table A-8. Figure A-2 shows the pond and distribution system layout.

A.4.1.8 Cost Estimates

Cost estimates of the forage crop irrigation system are determined from EPA publication "Cost of Land Treatment Systems" EPA-430/9-75-003, using the criteria shown in Table A-9. Cost estimate calculations and total costs are presented in Tables A-10 and A-11, respectively.

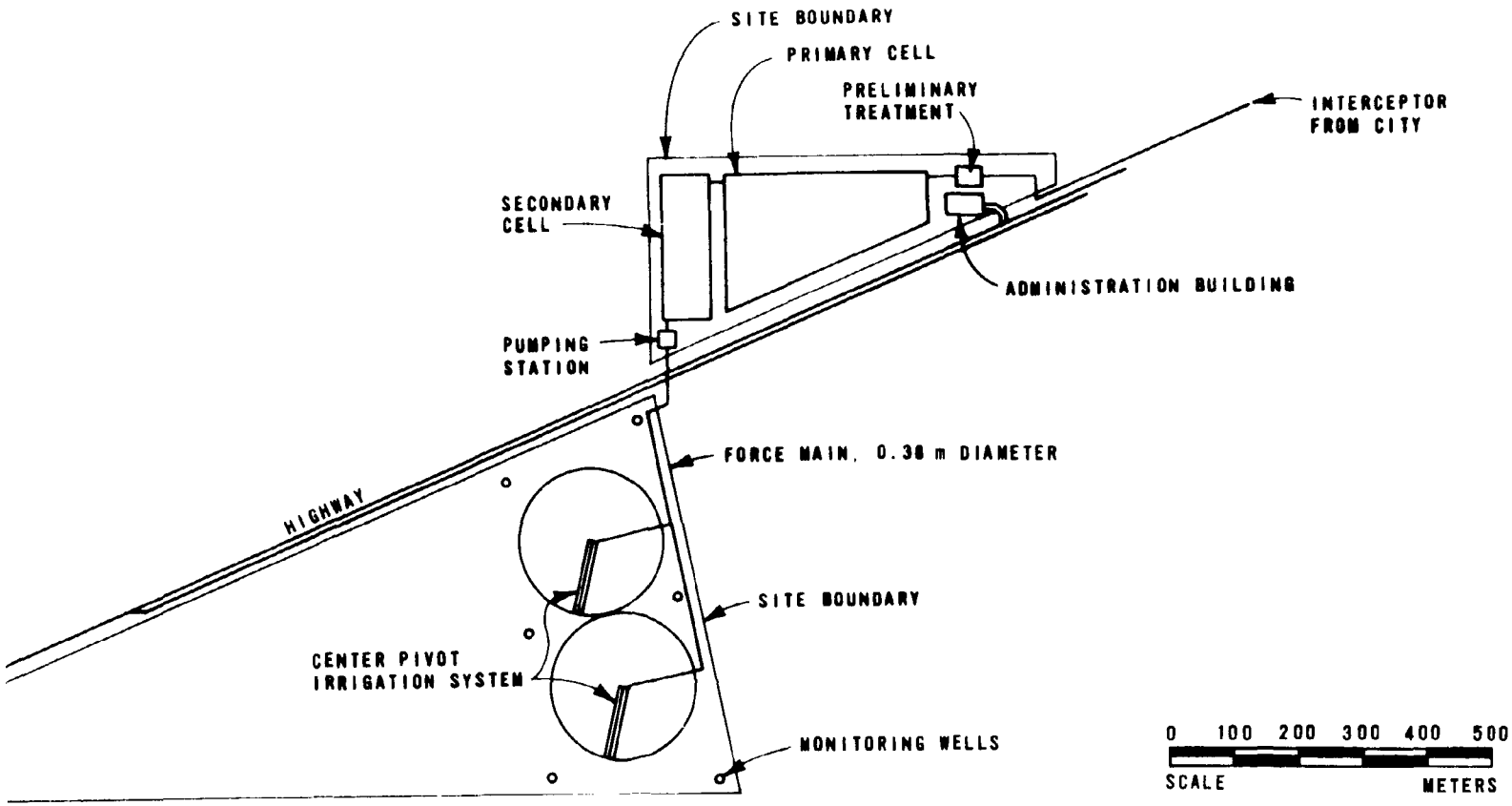

FIGURE A-2
SYSTEM LAYOUT: FORAGE CROP ALTERNATIVE

TABLE A-8
SLOW RATE SYSTEM DESIGN DATA: FORAGE CROP ALTERNATIVE

Irrigation system	
Annual hydraulic loading rate, cm	267
Field area, ha	107.5
Buffer, m	15
Application frequency, No./mo	4
Maximum hydraulic loading per application, cm	10.1
Application equipment, No. of center pivots	2
Lateral length, m	408
Operating pressure, N/cm^2	34.5
Field dimensions with buffer zone, m x m	1,662 x 846
Total area, ha	140.6
Pumping station	
Duty pumps, No. at m^3/min	4 at 2.7
Standby pumps, No. at m^3/min	1 at 2.7
Pumping time (peak flow)	
h/d	24
d/wk	7
h/wk	168
Force main	
Velocity, m/s	
Average	1.1
Maximum	1.7
Pipe diameter, m	0.38
Maximum headloss, m/1,000 m	6

TABLE A-9
COST ESTIMATE CRITERIA: FORAGE CROP ALTERNATIVE[a]

Circulation date	October 1980
Sewage treatment plant index update, 370.1/177.5	2.085
Sewer index update, 397.2/194.2	2.045
Operation and maintenance update, 2.13/1.00	2.13
Construction cost locality factor	1.0
Operation and maintenance/labor cost factor	1.0
Power cost locality factor	1.0
Interest rate, i	7.125%
Interest period, n	20
Present worth factor, PWF	0.2525
Capital recovery factor, CRF	0.0953

a. Based on "Cost of Land Treatment Systems," EPA-430/9-75-003.

TABLE A-10
COST ESTIMATE CALCULATIONS:
FORAGE CROP ALTERNATIVE

1.	Preliminary treatment	
	Capital ($48,000 x 2.085)	$100,100
	Operation and maintenance ($9,400 x 2.13)	20,000
2.	Treatment	
	Capital	
	Primary cell ($150,000 x 1.7 x 2.085)	$531,700
	Asphalt liner ($352,000 x 2.085)	733,900
	Operation and maintenance ($10,000 x 2.13)	21,300
3.	Pumping to application site	
	Peak flow = 180 L/s	
	Avg flow = 135 L/s	
	Capital ($210,000 x 2.085 x 0.80)	$350,300
	Operation and maintenance ($26,100 x 2.13)	55,600
4.	Force main (2.6 km: 0.38 m)	
	Capital ($162,100 x 2.045)	$331,500
	Operation and maintenance ($400 x 2.13)	900
5.	Storage (D = 59d, depth = 3.0 m)	
	Capital ($447,000 x 2.045)	$914,100
	Operation and maintenance ($2,400 x 2.13)	5,100
6.	Field preparation	
	Pond area (58 ha x 1.25 = 72.5 ha, brushes and trees)	
	Capital ($80,000 x 2.045)	$163,600
	Application site (53.8 ha x 2 = 107.6 ha, pasture)	
	Capital ($1,700 x 2.045)	3,500
7.	Distribution, center pivots (107.6 ha)	
	Capital ($135,000 x 2.045)	$276,100
	Operation and maintenance ($18,400 x 2.13)	39,200
8.	Administrative and laboratory	
	Capital ($64,000 x 2.045)	$130,900
	Operation and maintenance ($10,200 x 2.13)	21,700
9.	Monitoring wells (six wells at 12 m depth)	
	Capital ($4,800 x 2.045)	$ 9,800
	Operation and maintenance ($600 x 2.13)	1,300
10.	Roads and fences (application site, 140.6 ha)	
	Capital ($102,000 x 2.045)	$208,600
	Operation and maintenance ($2,700 x 2.13)	5,800
11.	Planting and harvesting	
	Operation and maintenance	
	Variable costs ($319/ha x 107.5 ha)	$ 34,300
	Fixed costs ($247/ha x 107.5 ha)	26,600
12.	Annual crop revenue	
	107.5 ha x 15.6 tons/ha x $42/ton	$ 70,400
13.	Land costs	
	Pond area (72.5 ha x $2,000/ha)	$145,000
	Application area (140.6 ha x $3,700/ha)	520,200

TABLE A-11
SUMMARY OF COSTS: FORAGE CROP ALTERNATIVE

Component	Capital	Salvage[a]	Operation and maintenance
Preliminary treatment	$ 100,100	$ 20,000	$ 20,000
Treatment/storage ponds	2,179,700	1,089,800	26,400
Pumping	350,300	42,000	55,600
Force main	331,500	165,800	900
Site clearing	167,100	0	0
Distribution	276,100	0	39,200
Administration building	130,900	26,200	21,700
Monitoring	9,800	0	1,300
Roads and fences	208,600	68,200	5,800
Planting and harvesting	--	--	60,900
Crop revenue	--	--	-70,400
Total construction	$3,754,100	$1,412,000	$ 161,400
Engineering, contingencies, overhead, etc.	938,500	0	0
Land	665,200	1,201,400	0
Total project	$5,357,800	$2,613,400	$ 161,400
Present worth		-659,000	1,693,600
Total present worth	$6,392,400		
Equivalent annual cost[b]	$ 609,200		

a. Salvage values are determined by straight line depreciation over the useful life of the components, e.g., useful life of ponds N = 40 yr; planning period P = 20 yr; salvage value F = (1 - P/N) (initial cost) = 0.5(2,179,700) = 1,089,800.

b. Equivalent annual cost = present worth x 0.0953.

A.4.2 Deciduous Forest Crop Alternative

As in the forage crop design, the selection of the maximum allowable hydraulic loading for the forest crop alternative minimizes the required land area. In the City A region, deciduous trees, in particular poplar, grow well. The poplar is a fast-growing tree and a pulp wood market exists.

A.4.2.1 Hydraulic Loading Based on Soil Permeability

The monthly water balance calculations are determined as in the forage crop water balance. The growing season for the deciduous tree selected lasts 214 days based on an average mean temperature of 10 °C (50 °F). Evaporation from the forest during the growing season is assumed to equal that from a full cover pastureland. No evaporation is assumed for the nongrowing season; wastewater applied during this time is limited by precipitation and percolation. Because the site is the same for both forage and forest alternative, the design percolation rate is the same. Applying these assumptions to the water balance Equation 4-3 results in a maximum hydraulic loading of 321 cm (126 in.) and a maximum monthly loading of 46.2 cm (18.2 in.).

A.4.2.2 Hydraulic Loading Based on Nitrogen Loading

Equation 4-4 is used to determine the hydraulic loadings based on nitrogen loading as in the forage crop alternative (Section A.4.1.2). No crop growth or nitrogen uptake was assumed for the months of December through March. Using a whole-tree harvest approach, the total annual nitrogen uptake is assumed to equal 200 kg/ha (178 lb/acre) (see Section 4.3.2.1). Based on these assumptions, the annual hydraulic loading equals 268 cm (105.5 in.).

A.4.2.3 Design Hydraulic Loading Rate

As in the forage crop alternative, nitrogen loading limits the hydraulic loading rate. Design monthly hydraulic loading rates are determined by comparing the monthly hydraulic loading rates based on soil permeability and nitrogen loading and using the lower value. Based on this comparison the design annual hydraulic loading rate is 254 cm (100 in.).

A.4.2.4 Field Area Requirements

Applying Equation 4-6 and assuming the net gain/loss from storage, ΔV_s, is zero, the initial field area is:

$$A_w = \frac{(7{,}570\ m^3/d)(365\ d/yr)}{(10^4\ m^2/ha)(2.54\ m)} = 108.8\ ha$$

A.4.2.5 Storage Requirements

As in the case with forage, storage of wastewater during nonoperating time depends on monthly hydraulic loadings and available wastewater. Applying the water balance Equation 4-3 and following steps 1-4 of Section A.4.1.5 results in Table A-12. The net storage volume required for year-round application is shown below:

$$V_{st} = (64.6\ cm)(108.8\ ha)(10^2) = 702{,}800\ m^3$$

TABLE A-12
INITIAL DETERMINATION OF STORAGE VOLUME:
FOREST CROP ALTERNATIVE
cm

Month	P	ET	ET-P	P_w	$L_{w(P)}$	$L_{w(n)}$	L_w	Available wastewater W_a	Change in storage	Cumulative storage S_c
Oct	9.9	5.0	-4.9	38.9	34.0	17.3	17.3	21.5	4.2	0.2[a]
Nov	14.8	0	-14.8	25.9	11.1	13.7	11.1	20.9	9.8	4.2
Dec	13.0	0	-13.0	20.2	7.2	12.0	7.2	21.5	14.3	14.0
Jan	10.1	0	-10.1	15.8	5.7	9.4	5.7	21.5	15.8	28.3
Feb	10.4	0	-10.4	18.7	8.3	9.6	8.3	19.5	11.2	44.1
Mar	15.1	0	-15.1	27.4	12.3	14.0	12.3	21.6	9.3	55.3
Apr	15.8	5.6	-10.2	43.2	33.0	23.8	23.8	20.9	-2.9	64.6
May	17.4	9.7	-7.7	44.6	36.9	32.0	32.0	21.6	-10.4	61.7
Jun	14.2	13.4	-0.9	43.2	42.3	35.1	35.1	20.9	-14.2	51.3
Jul	14.0	15.7	1.6	44.6	46.2	38.7	38.7	21.6	-17.1	37.1
Aug	12.2	13.9	1.6	44.6	46.2	34.1	34.1	21.6	-12.5	20.0
Sep	14.7	8.9	-5.8	43.2	37.4	28.2	28.2	20.9	-7.3	7.5
Annual	162	72	-90	410	321	268	254			

a. Rounding error, assume zero.

A.4.2.6 Final Storage and Pond Design

The steps outlined in Section A.4.1.6 are followed to determine the final storage and pond design. The design of the primary cell remains the same with the secondary cell being used to incorporate the net gain/loss from the pond area due to precipitation, evaporation, and seepage. As before, the initial depth of the secondary cell is assumed at 1.5 m (5 ft) resulting in a storage pond area of 20 ha (50 acres). The adjusted field area is calculated to be 113.2 ha (280 acres). The results of secondary cell design are shown in Table A-13.

TABLE A-13
DESIGN DATA FOR STORAGE POND:
FOREST CROP ALTERNATIVE

Secondary cell	
Surface area, ha	20
Total depth, m	2.9
Operating depth, m	2.4
Storage at operating depth, d	63
Total storage at operating depth	
Days	116
m^3	880,000

A.4.2.7 Distribution and Application

Solid set sprinkler systems, both surface and buried, are the most common methods used in forest crops for distributing wastewater. In the case of City A, the proposed treatment site is under pasture and the subsoils are uniform without much debris, consequently either system would work. The installation cost for the surface system is less than the buried system, but the cost for operation and maintenance is less for the buried system. After comparing total cost and discussing with City A their desire for low operation and maintenance cost, the designer selected the buried solid set sprinkler system.

The design of the sprinkler system is based on the maximum hydraulic load per application. An application frequency of 4 times per month is chosen to allow adequate aeration of the tree root system. Based on a maximum monthly hydraulic loading of 38.7 cm (15.2 in.), the maximum hydraulic loading per application of 9.7 cm (3.8 in.) is obtained. Referring

to manufacturers literature for solid set irrigation systems, design data are obtained and presented in Table A-14. The pond and irrigation system layout is shown in Figure A-3.

TABLE A-14
DESIGN DATA:
FOREST CROP ALTERNATIVE

Irrigation system	
Annual hydraulic loading rate, cm	254
Field area, ha	113
Buffer, m	15
Application frequency, No./mo	4
Total area, ha	123.5
Maximum hydraulic loading per application, cm	9.7
Distribution system	Buried solid set sprinklers
Spacing, m x m	18 x 21
Sprinkler flow, L/s at N/cm^2	0.85 @ 36, 0.63 cm diam
Lateral length, m	432
Sprinklers per line, No.	24
Application period, h	12
Settings per day, No.	2
Operating time, h/d	24
Laterals per setting, No.	9
Pumping rate, 9 x 24 x 0.85, L/s	184
Pumping station	
Duty pumps, No. at m^3/min	4 at 2.76
Standby pumps, No. at m^3/min	1 at 2.76
Pumping time	
h/d	24
d/wk	6
h/wk	144
Force main	
Velocity, m/s	
Average	1.1
Maximum	1.7
Pipe diameter, m	0.38
Maximum headloss, m/1,000 m	6.4

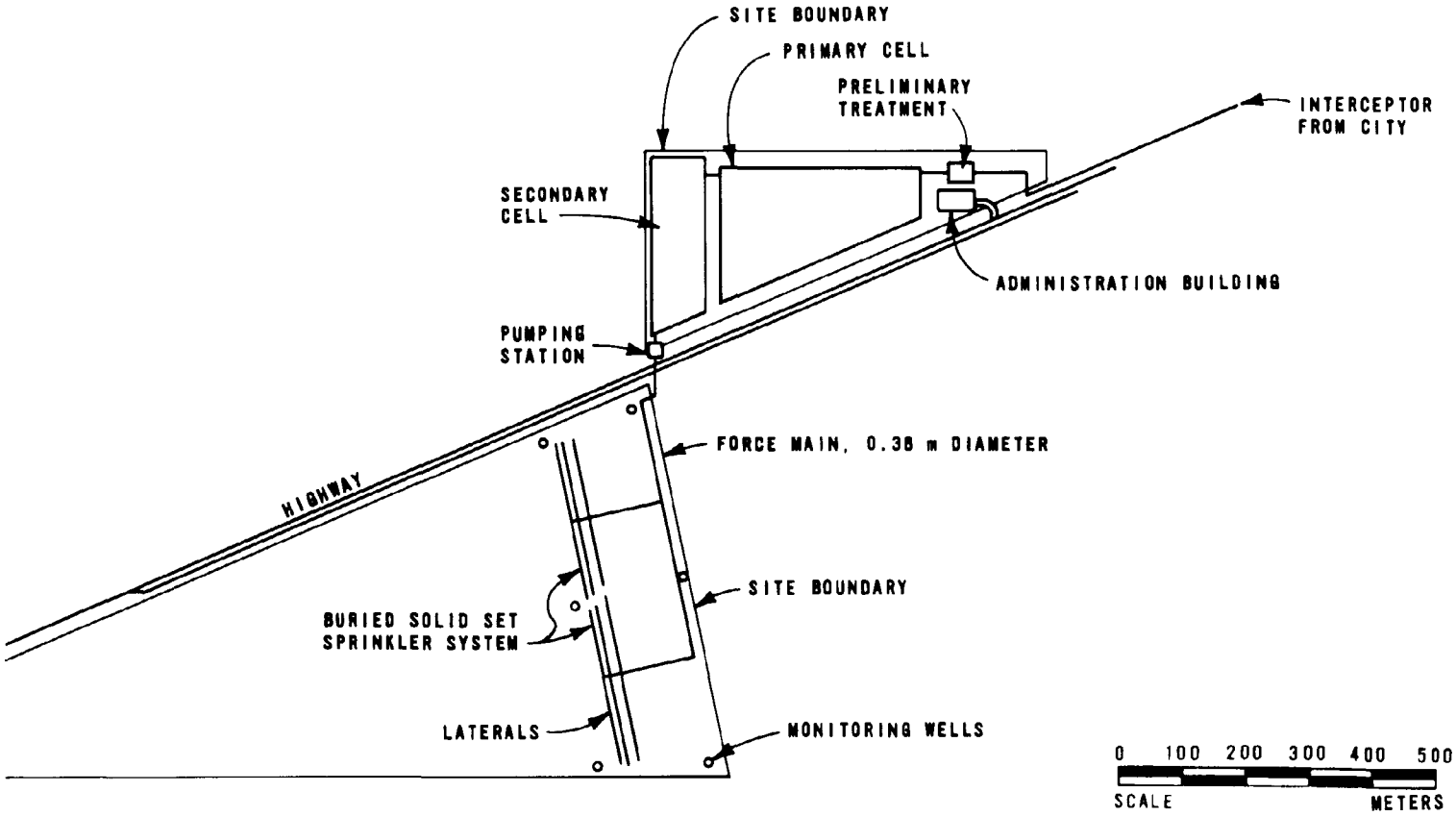

FIGURE A-3
SYSTEM LAYOUT: FOREST CROP ALTERNATIVE

A.4.2.8 Cost Estimates

Cost estimates are determined by the same method used for the forage crop alternative (Table A-9) and are summarized in Table A-15. Crop revenue is based on a harvest of one-fourth of the area every year beginning the fourth year, an annual growth rate of 25 tons/ha, a dry weight of 0.4 ton/ cord, and a stumpage price of $4/cord used for pulpwood.

TABLE A-15
SUMMARY OF COST: DECIDUOUS FORESTS

Component	Capital	Salvage	Operation and maintenance
Preliminary treatment	$ 100,100	$ 20,000	$ 20,000
Treatment/storage ponds	2,206,300	1,103,100	26,800
Pumping	325,300	39,000	55,600
Force main	314,000	157,000	900
Site clearing	167,500	0	0
Distribution	1,295,700	0	54,200
Administration building	130,900	26,200	21,700
Monitoring	9,800	0	1,300
Roads	112,500	75,000	4,900
Planting and harvesting	14,000	--	2,800
Crop revenue	--	--	-28,000
Total construction	$4,676,100	$1,420,300	$ 160,200
Engineering, contingencies, overhead, etc.	1,169,000	--	--
Land	606,900	1,096,100	--
Total project	$6,452,000	$2,516,400	$ 160,200
Present worth	--	-635,400	1,681,000
Total present worth	$7,497,600		
Annual equivalent cost	$ 714,500		

A.4.3 Selected SR Design

Comparing annual equivalent costs, the forage crop alternative is the most cost-effective alternative, with an annual equivalent cost of $609,200/yr, and is selected.

Management of the selected alternative consists of an initial seedbed preparation, seeding, cultivating, irrigating, and harvesting four times per year. Prior to harvesting, the field requires a drying period of 2 to 3 weeks. The harvested forage grass is then chopped and hauled away for use. The harvesting may be handled either by City A personnel or contracted outside. Assuming contract harvesting, the estimated staff requirement for all of the remaining operation is 1.5 man-years per year.

A.4.4 Energy Requirements

The two areas of operation that contribute most to the system energy requirements are pumping and crop production. Assuming 3,900 hours of operating time, 75% overall system efficiency, and 20% headloss through the distribution system, the energy required for pumping is shown below:

$$\text{TDH} = \text{pipe losses} + \text{operating pressure at sprinkler} + \text{losses through distribution system}$$

$$= 2{,}600\ \text{m}\ \frac{(5.5\ \text{m})}{1{,}000\ \text{m}} + 35 + 7$$

$$= 56.3\ \text{m}$$

$$\text{Energy} = \frac{(Q)(\text{TDH})(t)}{(6{,}123)(E)}$$

$$= 515{,}200\ \text{kWh/yr}$$

Energy required for forage crop production is computed using the energy requirement factor given in Table 8-1.

$$\text{Energy} = \frac{107.5\ \text{ha} \times (3.63\ \text{MJ/ha})}{3.6\ \text{MJ/kWh}}$$

$$= 110\ \text{kWh/yr}$$

Therefore, the total annual energy budget for this SR example is:

$$110 + 515{,}200 = 515{,}310\ \text{kWh/yr}$$

The total energy budget for an activated sludge and anaerobic digestion treatment system of equal size would be 680,000 kWh/yr electrical energy and 3,100 x 10^6 BTU/yr fuel energy or a total of 967,000 kWh/yr.