APPENDIX E

DISTRIBUTION SYSTEM DESIGN FOR SLOW RATE

E.1 Introduction

Details of distribution system design for the SR process are presented in this appendix for both surface and sprinkler distribution methods. Some aspects covered here are also applicable to RI or OF distribution techniques. The level of detail presented in this appendix is sufficient to develop preliminary layouts and sizing of distribution system components. References are cited that provide more complete design information.

E.2 General Design Considerations

Several design parameters are common to all distribution systems and are defined in the following.

E.2.1 Depth of Water Applied

The depth of water applied is the hydraulic loading per application expressed in cm (in.) and can be determined using the relationship:

$$D = L_w/F \qquad \text{(E-1)}$$

where D = depth of water applied, cm (in.)

L_w = monthly hydraulic loading, cm (in.)

F = application frequency, number of applications per month

The monthly hydraulic loadings will have been established as a result of the water balance calculations developed in Section 4.5.

E.2.2 Application Frequency

The application frequency is defined as the number of applications per month or per week. The application frequency to use for design is a judgment decision to be made by the designer considering: (1) the objectives of the system, (2) the water needs or tolerance of the crop, (3) the moisture retention properties of the soil, (4) the labor requirements of the distribution system, and (5) the capital cost of the

distribution system. Some general guidelines for determining an appropriate application frequency are presented here, but consultation with a local farm adviser is recommended.

Except for the water tolerant forage grasses, most crops, including forest crops, require a drying period between applications to allow aeration of the root zone to achieve optimum growth and nutrient uptake. Thus, more frequent applications are appropriate as the ET rate and the soil permeability increase. In practice, application frequencies range from once every 3 or 4 days for sandy soils to about once every 2 weeks for heavy clay soils. An application frequency of once per week is commonly used.

The operating and capital costs of distribution systems can affect the selection of application frequency. With distribution systems that must be moved between applications (move—stop systems), it is usually desirable to minimize labor and operating costs by minimizing the number of moves and therefore the frequency of application. On the other hand, capital costs of the distribution system are directly related to the flow capacity of the system. Thus, the capital cost may be reduced by increasing the application frequency to reduce system capacity.

E.2.3 Application Rate

Application rate is the rate at which water is applied to the field by the distribution system. In general, the application rate should be matched to the infiltration rate of the soil or vegetated surface to prevent excessive runoff and tailwater return requirements. Specific guidelines relating application rates to infiltration properties are discussed under the different types of distribution systems.

E.2.4 Application Period

The application period is the time necessary to apply the desired depth of water (D). Application periods vary according to the type of distribution system, but, in general are selected to be convenient to the operator and compatible with regular working hours. For most distribution systems, application periods are less than 24 hours.

E.2.5 Application Zone

In most systems, wastewater is not applied to the entire field area during the application period. Rather, the field area is divided into application plots or zones and wastewater is applied to only one zone at a time. Application is rotated among the zones such that the entire

field area receives wastewater within the time interval specified by the application frequency. Application zone area can be computed with the following:

$$A_a = A_w/N_a \qquad \text{(E-2)}$$

where A_a = application zone area, ha (acres)

A_w = field area, ha (acres) (see Section 4.5.4.1)

N_a = No. of application zones

The number of application zones is equal to the number of applications that can be made during the time interval between successive applications on the same zone as specified by the application frequency.

For example, if the application period is 11 hours, effectively 2 applications can be made each operating day. If the application frequency is once per week and the system is operated 7 days per week, then there are 7 operating days between successive applications on the same zone and the number of application zones is:

$$N_a = (2 \text{ applications/day})(7 \text{ operating days}) = 14$$

If the field area is 100 ha (40 acres), then the application zone is:

$$A_a = 100 \text{ ha}/14$$

$$= 7.14 \text{ ha}$$

E.2.6 System Capacity

Whatever type of distribution system is selected, the maximum flow capacity of the system must be determined so that components, such as pipelines and pumping stations, can be properly sized. For systems with a constant application rate throughout the application period, the flow capacity of the system can be computed using the following formula:

$$Q = CA_aD/t_a \qquad \text{(E-3)}$$

where Q = discharge capacity, L/s (gal/min)

C = constant, 28.1 (453)

A_a = application area, ha (acres)

D = depth of water applied, cm (in.)

t_a = application period, h

Other methods of computing system flow capacity are illustrated for each of the distribution systems.

E.3 Surface Distribution Systems

E.3.1 Ridge and Furrow Distribution

The design procedure for ridge and furrow systems is empirical and is based on past experience with good irrigation systems and field evaluation of operating systems. For more detailed design procedures, the designer is referred to references [1] and [2].

The design variables for furrow systems include furrow grade, spacing, length, and stream size (flowrate) (Figure E-la). The furrow grade will depend on the site topography. A grade of 2% is the recommended maximum for straight furrows. Furrows can, be oriented diagonally across fields to reduce grades. Contour furrows or corrugations can be used with grades in the range of 2 to 10%.

The furrow spacing depends on the water intake characteristics of the soil. The principal objective in selecting furrow spacing is to make sure that the lateral movement of the water between adjacent furrows will wet the entire root zone before it percolates beyond the root zone. Suggested furrow spacings based on different soil and subsoil conditions are given in Table E-1.

The length of the furrow should be as long as will permit reasonable uniformity of application, because labor requirements and capital costs increase as furrows become shorter. Suggested maximum furrow lengths for different grades, soils, and depths of water applied are given in Table E-2.

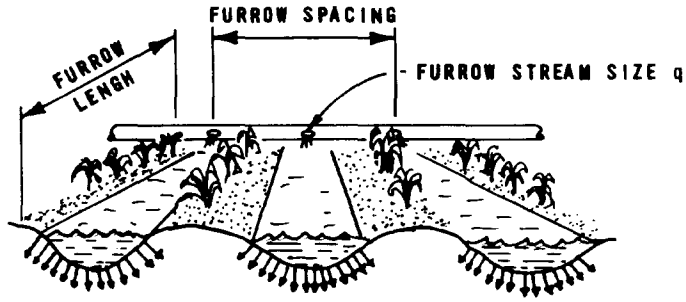

(a) RIDGE AND FURROW

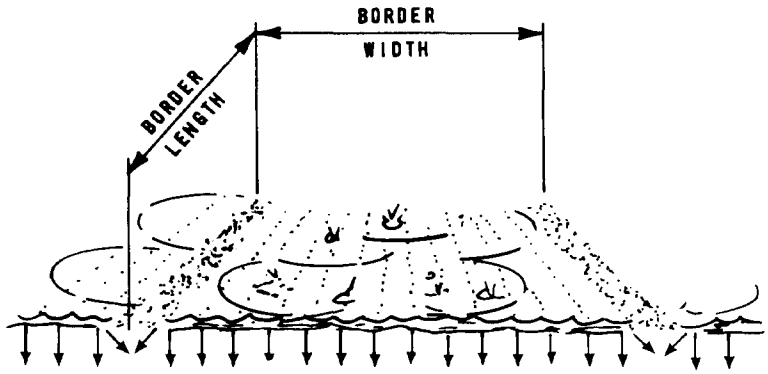

(b) GRADED BORDER

FIGURE E-1
SURFACE DISTRIBUTION METHODS

TABLE E-1
OPTIMUM FURROW SPACING [3]

Soil condition	Optimum spacing, cm
Coarse sands - uniform profile	30
Coarse sands - over compact subsoils	46
Fine sands to sandy loams - uniform	61
Fine sands to sandy loams - over more compact subsoils	76
Medium sandy-silt loam - uniform	91
Medium sandy-silt loam - over more compact subsoils	102
Silty clay loam - uniform	122
Very heavy clay soils - uniform	91

TABLE E-2
SUGGESTED MAXIMUM LENGTHS OF CULTIVATED FURROWS FOR DIFFERENT SOILS, GRADES, AND DEPTHS OF WATER TO BE APPLIED [1]

	Avg depth of water applied[a], cm											
	Clays				Loams				Sands			
Furrow grade, %	7.5	15	22.5	30	5	10	15	20	5	7.5	10	12.5
0.05	300	400	400	400	120	270	400	400	60	90	150	190
0.1	340	440	470	500	180	340	440	470	90	120	190	220
0.2	370	470	530	620	220	370	470	530	120	190	250	300
0.3	400	500	620	800	280	400	500	600	150	220	280	400
0.5	400	500	560	750	280	370	470	530	120	190	250	300
1.0	280	400	500	600	250	300	370	470	90	150	220	250
1.5	250	340	430	500	220	280	340	400	80	120	190	220
2.0	220	270	340	400	180	250	300	340	60	90	150	190

a. From Equation E-1.

The furrow stream size or application rate is expressed as a flowrate per furrow. The optimum stream size is usually determined by trial and adjustment in the field after the system has been installed [2]. The most uniform distribution (highest application efficiency) generally can be achieved by starting the application with the largest stream size that

can be safely carried in the furrow. Once the stream has reached the end of the furrow, the application rate can be reduced or cut back to reduce the quantity of runoff that must be handled. As a general rule, it is desirable to have the stream size large enough to reach the end of the furrow within one-fifth of the total application period. This practice will result in an application efficiency of greater than 90% for most soils if tailwater is returned (see Section 4.8.2.1).

The application period is the time needed to infiltrate the desired depth of water plus the time required for the stream to advance to the end of the furrow. The time required for infiltration depends on the water intake characteristics of the furrow. There is no standard method for estimating the furrow intake rate. The recommended approach is to determine furrow intake rates and infiltration times by field trials as described in reference [2].

Design of supply pumps and transmission systems should be based on providing the maximum allowable stream size, which is generally limited by erosion considerations when grades are greater than 0.3%. The maximum nonerosive stream size can be estimated from the equation:

$$q_e = C/G \qquad \text{(E-4)}$$

where q_e = maximum unit stream size, L/s (gal/min)

C = constant, 0.6 (10)

G = grade, %

For grades less than 0.3%, the maximum allowable stream size is governed by the flow capacity of the furrow, estimated as follows:

$$q_c = CF_a \qquad \text{(E-5)}$$

where q_c = furrow flow capacity, L/s (gal/min)

C = constant, 50 (74)

F_a = cross—sectional area of furrow, m^2 (ft^2)

Various conveyance systems and devices are used to apply water to the head of the furrows. The most common conveyance systems are open ditches or canals (lined and unlined), surface pipelines, and buried low-pressure pipelines. For wastewater distribution, pipelines are generally used. If buried pipelines are used to convey water, vertical riser pipes with valves are usually spaced at frequent intervals to release water into temporary ditches equipped with siphon tubes or into hydrants connected to portable gated surface pipe (Figure E-2).

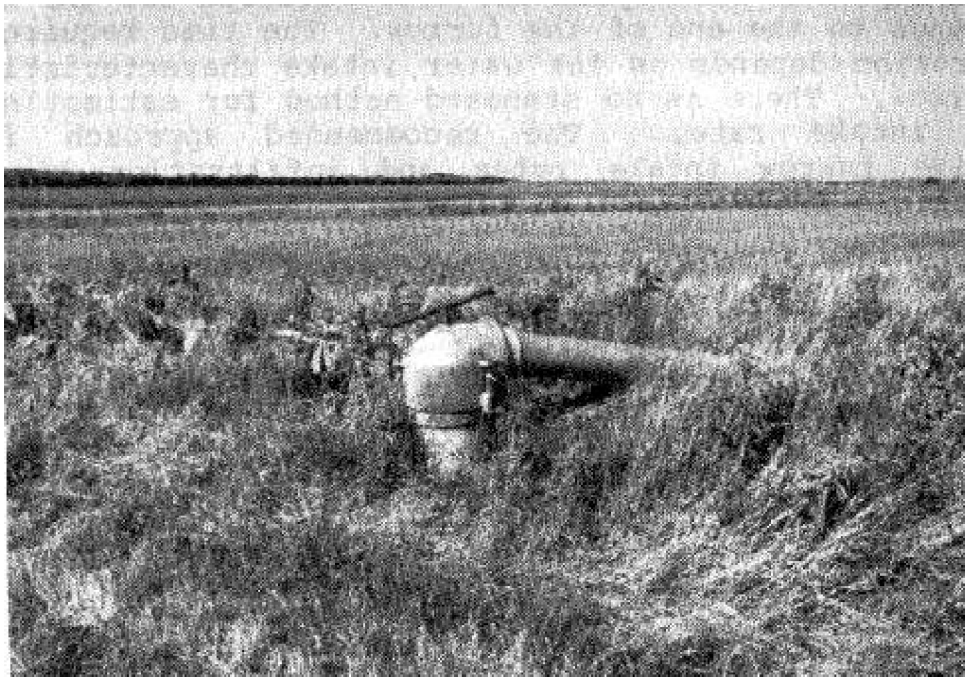

FIGURE E-2
ALUMINUM HYDRANT AND GATED PIPE
AT SWEETWATER, TEXAS

The spacing of the risers is governed either by the headloss in the gated pipe or by widths of border strips when graded border and furrow methods are alternated on the same field. The valves used in risers usually are alfalfa valves (mounted on top of the riser) or orchard valves (mounted inside the riser). Valves must be sized to deliver the design flowrate.

Gated surface pipe may be aluminum, plastic, or rubber. Outlets along the pipe are spaced to match furrow spacings. The pipe and hydrants are portable so that they may be moved for each irrigation. The hydrants are mounted on valved risers, which are spaced along the buried pipeline that supplies the wastewater. Operating handles extend through the hydrants to control the alfalfa or orchard valves located in the risers. Control of flow into each furrow is accomplished with slide gates or screw adjustable orifices at each outlet. Slide gates are recommended for use with wastewater. Gated outlet capacities vary with the available head at the gate, the velocity of flow passing the gate, and the gate opening. Gate openings are usually adjusted in the field to achieve the desired stream size.

EXAMPLE E-1: DETERMINATION OF PRELIMINARY DESIGN CRITERIA FOR A RIDGE AND FURROW DISTRIBUTION SYSTEM

Design Conditions

1. Soil conditions: sandy loam over clay
2. Final grade: 0.5%
3. Maximum monthly hydraulic loading (L_w): 40 cm
4. Application frequency (F) : 4 times per month (l/wk)
5. Total field area (A_w): 100 ha
6. Crop: corn

Design Calculations

1. Determine depth of water to be applied during application.

$$D = L_w/F \qquad \text{(E-1)}$$
$$= 40/4$$
$$= 10 \text{ cm}$$

2. Determine the application zone area with Equation E-2. Assume four applications per day will be performed, 7 d/wk.

$$\text{Application zone area } (A_a) = \frac{A_w}{28 \text{ application zones}} \qquad \text{(E-2)}$$
$$= \frac{100 \text{ ha}}{28}$$
$$= 3.6 \text{ ha}$$

3. Select furrow spacing from Table E-1.

$$S_f = 76 \text{ cm}$$

4. Select furrow length from Table E-2.

$$L_f = 370 \text{ m}$$

5. Estimate maximum furrow stream size (application rate) from Equation E-4.

$$q_e = \frac{0.6}{0.5} \qquad \text{(E-4)}$$

$$= 1.2 \text{ L/s}$$

This flow is used until the stream reaches the end of the furrow, at which time the flow is reduced.

6. Calculate the number of furrows used per application zone.

$$\text{No. of furrows} = \frac{(A_a)(10^4 \text{ m}^2/\text{ha})}{(L_f)(S_f)(0.01 \text{ m/cm})}$$

$$= \frac{(3.6 \text{ ha})(10^4 \text{ m}^2/\text{ha})}{(370 \text{ m})(76 \text{ cm/furrow})(0.01 \text{ m/cm})}$$

$$= 127 \text{ furrows}$$

7. Calculate the maximum flow that must be delivered to each application area (distribution system capacity).

$$Q = (\text{No. of furrows})(q_e)$$

$$= (127)(1.2 \text{ L/s})$$

$$= 152 \text{ L/s } (2{,}417 \text{ gal/min})$$

E.3.2 Graded Border Distribution

Preliminary design considerations for straight, graded border distribution systems are discussed here. Quasirational design procedures have been developed by the SCS for all variations of border distribution systems and are given in Chapter 4, Section 15, of the SCS Engineering Handbook [5].

The design variables for graded border distribution are:

1. Grade of the border strip
2. Width of the border strip
3. Length of the border strip
4. Unit stream size

Graded border distribution can be used on grades up to about 7%. Terracing of graded borders can be used for grades up to 20%.

The widths of border strips are often selected for compatibility with farm implements, but they also depend to a certain extent upon grade and soil type, which affect the uniformity of distribution across the strip. A guide for estimating strip widths is presented in Tables E-3 and E-4.

TABLE E-3
DESIGN GUIDELINES FOR GRADED BORDER DISTRIBUTION, DEEP ROOTED CROPS [1]

Soil type and infiltration rate	Grade, %	Unit flow per 1 m of strip width, L/s	Avg depth[a] of water applied, cm	Border strip, m	
				Width	Length
Sandy, ≥2.5 cm/h	0.2-0.4	10-15	7-10	12-30	60-90
	0.4-0.6	8-10	7-10	9-12	60-90
	0.6-1.0	5-8	7-10	6-9	75
Loamy sand, 1.8-2.5 cm/h	0.2-0.4	7-10	10-13	12-30	75-150
	0.4-0.6	5-8	10-13	8-12	75-150
	0.6-1.0	3-6	10-13	8	75
Sandy loam 1.2-1.8 cm/h	0.2-0.4	5-7	10-15	12-30	90-250
	0.4-0.6	4-6	10-15	6-12	90-180
	0.6-1.0	2-4	10-15	6	90
Clay loam, 0.6-0.8 cm/h	0.2-0.4	3-4	15-18	12-30	180-300
	0.4-0.6	2-3	15-18	6-12	90-180
	0.6-1.0	1-2	15-18	6	90
Clay, 0.3-0.6 cm/h	0.2-0.3	2-4	15-20	12-30	350+

a. From Equation E-1.

TABLE E—4
DESIGN GUIDELINES FOR GRADED BORDER DISTRIBUTION, SHALLOW ROOTED CROPS [1]

Soil profile	Grade, %	Unit flow per 1 m of strip width, L/s	Avg depth[a] of water applied, cm	Border strip, m	
				Width	Length
Clay loam, 60 cm deep over permeable subsoil	0.15-0.6	6-8	5-10	5-18	90-180
	0.6-1.5	4-6	5-10	5-6	90-180
	1.5-4.0	2-4	5-10	5-6	90
Clay, 60 cm deep over permeable subsoil	0.15-0.6	3-4	10-15	5-18	180-300
	0.6-1.5	2-3	10-15	5-6	180-300
	1.5-4.0	1-2	10-15	5-6	180
Loam, 15-45 cm deep over hardpan	1.0-4.0	1-4	3-8	5-6	90-300

a. From Equation E-1.

The length of border strips should be as long as practical to minimize capital and operating costs. However, extremely long runs are not practical due to time requirements for patrolling and difficulties in determining stream size adjustments. Lengths in excess of 400 m (1,300 ft) are not recommended. In general, border strips should not be laid out

across two or more soil types with different intake characteristics or water holding capacities, and border strips should not extend across slope grades that differ substantially. The appropriate length for a given site depends on the grade, the allowable stream size, the depth of water applied, the intake characteristics of the soil, and the configuration of the site boundaries. For preliminary design, the length of the border may be estimated using Tables E-3 and E-4.

The application rate or unit stream size for graded border irrigation is expressed as a flowrate per unit width of border strip, L/s•m ($ft^3/s \cdot ft$). The stream size must be such that the desired volume of water is applied to the strip in a time equal to, or slightly less than, the time necessary for the water to infiltrate the soil surface. When the desired volume of water has been delivered onto the strip, the stream is turned off. Shutoff normally occurs when the stream has advanced about 75% of the length of the strip. The objective is to have sufficient water remaining on the border after shutoff to apply the desired water depth to the remaining length of border with very little runoff.

Use of a proper stream size is necessary to achieve uniform and efficient application. Too rapid a stream results in inadequate application at the upper end of the strip or in excessive surface runoff at the lower end. If the stream is too small, the lower end of the strip receives inadequate water or the upper end has excessive deep percolation. Actually achieving uniform distribution with minimal runoff requires a good deal of skill and experience on the part of the operator. The optimum stream size is best determined by field trials as described in reference [2]. The range of stream sizes given in Tables E-3 and E-4 for various soil and crop conditions may be used for preliminary design. Procedures given in reference [5] may be used to obtain a more accurate estimate of stream size.

The application period necessary to apply the desired depth of water may be determined from the following equation:

$$t_a = LD/Cq \qquad \text{(E-6)}$$

where t_a = application period, h

L = border strip length, m (ft)

D = depth of applied water, cm (in.)

C = constant, 360 (96.3)

q = unit stream size, L/s·m of width (gal/min•ft of width

The conveyance and application devices used for border distribution are basically the same as described for ridge and furrow distribution (Section E.3.1). Open ditches with several evenly spaced siphon tubes are often used to supply the required stream size to a border strip. When buried pipe is used for conveyance, vertical risers with valves are usually spaced at intervals equal to the width of the border strip and are located midway in the border strip. With this arrangement, one valve supplies each strip. Water is discharged from the valve directly to the ground surface, as indicated in Figure E-3, and is distributed across the width of the strip by gravity flow. For border strip widths greater than 9 m (30 ft), at least two outlets per strip are necessary to achieve good distribution across the strip. Hydrants and gated pipe can be used with border systems. Use of gated pipe provides much more uniform distribution at the head of border strips and allows the flexibility of easily changing to ridge and furrow distribution if crop changes are desired.

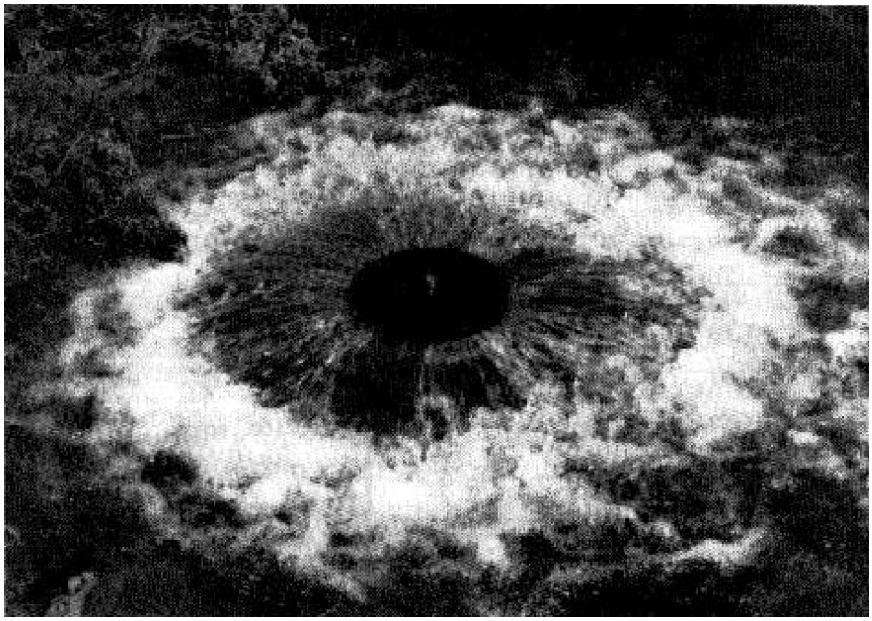

FIGURE E-3
OUTLET VALVE FOR BORDER STRIP APPLICATION

EXAMPLE E-2: DETERMINATION OF PRELIMINARY DESIGN CRITERIA FOR GRADED BORDER DISTRIBUTION SYSTEM

Design Conditions

1. Soil conditions: deep clay
2. Final grade: 0.5%
3. Maximum monthly hydraulic loading (L_w): 40 cm
4. Application frequency (F): 4 times/month
5. Total field area (A_w): 100 ha
6. Crop: pasture

Design Calculations

1. Determine depth of water to be applied (D).
   D = 10 cm (see Example E-1)
2. Select strip width and length from Table E-4 based on design conditions.
   W = 12 m
   L = 180 m
3. Select unit stream size (q) from Table E-4.
   q = 4 L/s·m
4. Estimate period of application (t_a) using Equation E-6.

$$t_a = \frac{LD}{Cq} \qquad \text{(E-6)}$$

$$= \frac{(180\ \text{m})(10\ \text{cm})}{(360)(4\ \text{L/s})}$$

$$= 1.25\ \text{h}$$

5. Determine number of applications per day. Assume a 12 h/d operating period.

No. of applications = (12 h/d)(1.25 h/application)
= 15

6. Determine application zone area (A_a). Assume application 7 d/wk.

$$A_a = \frac{A_w}{(7\ \text{d})(15\ \text{applications/d})}$$

$$= \frac{100\ \text{ha}}{105}$$

$$= 0.95\ \text{ha}$$

7. Determine number of border strips per application zone.

$$\text{No. of strips} = \frac{A_a}{LW}$$

$$= \frac{(0.95\ \text{ha})(10^4\ \text{m}^2/\text{ha})}{(180\ \text{m})(12\ \text{m/strip})}$$

8. Determine system flow capacity (Q)
   Q = (5 strips) (W) (q)
   = (5) (12 m) (4 L/s·m)
   = 240 L/s (3,803 gal/min)

E.4 Sprinkler Distribution Systems

E.4.1 Application Rates

The principal design variable for all sprinkler systems is the application rate, cm/h (in./h). The design application rate should be less than the saturated permeability or infiltration rate of the surface soil (see Chapter 3) to prevent runoff and uneven distribution. Application rates can be increased when a full cover crop is present (see Section 4.3.2.4). The increase should not exceed 100% of the bare soil application rate. Recommended reductions in application rate for sloping terrain are given in Table E-5. A practical minimum design application rate is 0.5 cm/h (0.2 in./h). For final design, the application rate should be based on field infiltration rates determined on the basis of previous experience with similar soils and crops or from direct field measurements.

TABLE E-5
RECOMMENDED REDUCTIONS IN APPLICATION RATES DUE TO GRADE [6]
Percent

Grade	Application rate reduction[a]
0-5	0
6-8	20
9-12	40
13-20	60
over 20	75

a. Percent of level ground application rate.

E.4.2 Solid Set Sprinkler Systems

Solid set sprinkler systems remain in one position during the application season. The system consists of a grid of mainline and lateral pipes covering the field to be irrigated. Impact sprinklers are mounted on riser pipes extending vertically from the laterals. Riser heights are determined by crop heights and spray angle. Sprinklers are spaced at prescribed equal intervals along each lateral pipe, usually 12 to 27 m (40 to 90 ft). A schematic layout of a solid set sprinkler system is shown in Figure E-4. A system is called <u>fully</u>

permanent or stationary when all lines and sprinklers are permanently located. Permanent systems usually have buried main and lateral lines to minimize interference with farming operations. Solid set systems are called fully portable when portable surface pipe is used for main and lateral lines. Portable solid set systems can be used in situations where the surface pipe will not interfere with farming operations and when it is desirable to remove the pipe from the field during periods of winter storage. When the mainline is permanently located and the lateral lines are portable surface pipe, the system is called semipermanent or alternatively semiportable.

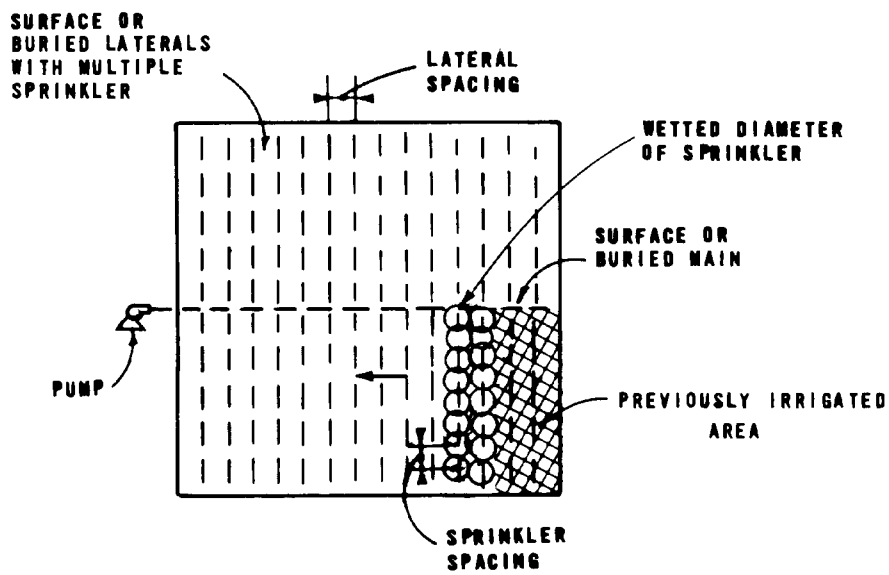

FIGURE E-4
SOLID SET SPRINKLER SYSTEM

The primary advantages of solid set systems are low labor requirements and maintenance costs, and adaptability to all types of terrain, field shapes, and crops. They are also the most adaptable systems for climate control requirements. The major disadvantages are high installation costs and obstruction of farming equipment by fixed risers.

E.4.2.1 Application Rate

For solid set systems, the application rate is expressed as a function of the sprinkler discharge capacity, the spacing

of the sprinklers along the lateral, and the spacing of the laterals along the main according to the following equation:

$$I = q_s C / S_s S_L \qquad \text{(E-7)}$$

where I = application rate, cm/h (in./h)

q_s = sprinkler discharge rate, L/s, (gal/min)

C = constant = 360 (96.3)

S_s = sprinkler spacing along lateral, m (ft)

S_L = lateral spacing along main, m (ft)

Detailed procedures for sprinkler selection and spacing determination to achieve the desired application rate are given in references [6, 7, 8].

E.4.2.2 Sprinkler Selection and Spacing Determination

Sprinkler selection and spacing determination involves an iterative process. The usual procedure is to select a sprinkler and lateral spacing, then determine the sprinkler discharge capacity required to provide the design application rate at the selected spacing. The required sprinkler discharge capacity may be calculated using Equation E-7.

Manufacturers sprinkler performance data are then reviewed to determine the nozzle sizes, operating pressures, and wetted diameters of sprinklers operating at the desired discharge rate. The wetted diameters are then checked with the assumed spacings for conformance with spacing criteria. Recommended spacings are based on a percentage of the wetted diameter and vary with the wind conditions. Recommended spacing criteria are given in Table E-6.

The sprinkler and nozzle size should be selected to operate within the pressure range recommended by the manufacturer. Operating pressures that are too low cause large drops which are concentrated in a ring a certain distance away from the sprinkler, whereas high pressures result in fine drops which fall near the sprinkler. Sprinklers with low design operating pressures are desirable from an energy conservation standpoint.

TABLE E-6
RECOMMENDED SPACING OF SPRINKLERS [6]

Average wind speed		
km/h	(mi/h)	Spacing, % of wetted diameter
0-11	(0-7)	40 (between sprinklers) 65 (between laterals)
11-16	(7-10)	40 (between sprinklers) 60 (between laterals)
>16	(>10)	30 (between sprinklers) 50 (between laterals)

E.4.2.3 Lateral Design

Lateral design consists of selecting lateral sizes to deliver the total flow requirement of the lateral with friction losses limited to a predetermined amount. A general practice is to limit all hydraulic losses (static and dynamic) in a lateral to 20% of the operating pressure of the sprinklers. This will result in sprinkler discharge variations of about 10% along the lateral. Since flow is being discharged from a number of sprinklers, the effect of multiple outlets on friction loss in the lateral must be considered. A simplified approach is to multiply the friction loss in the entire lateral at full flow (discharge at the distal end) by a factor based on the number of outlets. The factors for selected numbers of outlets are presented in Table E-7. For long lateral lines, capital costs may be reduced by using two or more lateral sizes that will satisfy the headloss requirements.

The following guidelines should be used when laying out lateral lines:

1. Where possible, run the lateral lines across the predominant land slope and provide equal lateral lengths on both sides of the mainline.

2. Avoid running laterals uphill where possible. If this cannot be avoided, the lateral length must be shortened to allow for the loss in static head.

3. Lateral lines may be run down slopes from a mainline on a ridge, provided the slope is relatively uniform and not too steep. With this arrangement, static head is gained with distance downhill, allowing longer or

smaller lateral lines to be used compared to level ground systems.

4. Lateral lines should run as nearly as possible at right angles to the prevailing wind direction. This arrangement allows the sprinklers rather than laterals to be spaced more closely together to account for wind distortion and reduces the amount of pipe required.

TABLE E-7
FACTOR (F) BY WHICH PIPE FRICTION LOSS IS MULTIPLIED TO OBTAIN ACTUAL LOSS IN A LINE WITH MULTIPLE OUTLETS [3]

No. of outlets	Value of F
1	1.000
2	0.634
3	0.528
4	0.480
5	0.451
6	0.433
7	0.419
8	0.410
9	0.402
10	0.396
15	0.379
20	0.370
25	0.365
30	0.362
40	0.357
50	0.355
100	0.350

EXAMPLE E-3: DETERMINATION OF PRELIMINARY DESIGN CRITERIA FOR SOLID SET SPRINKLER SYSTEM

Design Conditions

1. Soil conditions: loam, permeability - 0.75 cm/h
2. Crop: forage grass
3. Depth of water applied (D): 7.5 cm
4. Application zone area (A_a): 10 ha
5. Average wind speed: 8 km/h

Design Calculations

1. Determine design application rate (I). Assume 50% greater than bare soil permeability rate due to cover crop.
   Use I = 1.13 cm/h (0.45 in./h)
2. Select sprinkler and lateral spacings.
   Use S_s = 12.2 m (40 ft)
   S_L = 18.3 m (60 ft)
3. Calculate required sprinkler discharge using Equation E-7.

$$q_s = \frac{(I)(S_s)(S_L)}{C}$$

$$= \frac{(1.13\ \text{cm/h})(12.2\ \text{m})(18.3\ \text{m})}{360}$$

$$= 0.7\ \text{L/s}\ (11.1\ \text{gal/min})$$

4. Select sprinkler pressure and nozzle size from manufacturer*s performance data to provide q_s.
   Use 0.56 cm (7/32 in.) nozzle at 48 N/cm^2 (70 lb/in.^{2}).
   Wetted diameter = 38.1 m (125 ft)
5. Check selected spacing against spacing criteria in Table E-6.

$$\text{Sprinkler spacing} = \frac{12.2}{38.1}\ (100\%)$$

$$= 32\% \leq 40\%$$

$$\text{Lateral spacing} = \frac{18.3}{38.1}\ (100\%)$$

6. Determine system flow capacity (Q)

$$Q = (A_a)(I)$$

$$= (10\ \text{ha})(1.13\ \text{cm/h})(10^4\ \text{m}^2/\text{ha})(10^{-2}\ \text{m/cm})\left(0.28\ \frac{\text{L/s}}{\text{m}^3/\text{h}}\right)$$

$$= 314\ \text{L/s}\ (4{,}975\ \text{gal/min})$$

7. Determine application period.

$$t_a = D/I$$

$$= \frac{7.5\ \text{cm}}{1.13\ \text{cm/h}}$$

$$= 6.6\ \text{h}$$

E.4.3 Move-Stop Sprinkler Systems

With move-stop systems, sprinklers (or a single sprinkler) are operated at a fixed position in the field during application. After the desired amount of water has been applied, the system is turned off and the sprinklers (or sprinkler) are moved to another position in the field for the next application. Multiple sprinkler move-stop systems include portable hand-move systems, end tow systems, and side-wheel roll systems. Single sprinkler move-stop systems include stationary gun systems. The operational characteristics of these systems and a discussion of design procedures are described in the following paragraphs.

E.4.3.1 Portable Hand-Moved Systems

Portable hand-moved systems consist of a network of surface aluminum lateral pipes connected to a main line which may be portable or permanent. Lateral lines are constructed of aluminum pipe in 9 or 12 m (30 or 40 ft) lengths with sprinklers mounted on vertical risers extending from the lateral at equal intervals. There are not enough lateral lines to cover the entire field; thus, lateral lines must be hand-moved between applications to different positions along the main to apply water to the entire field. A schematic of a portable hand moved system is shown in Figure E-5a. The major advantages of portable systems include low capital costs and adaptability to most field conditions and climates. They may also be removed from the fields to avoid interference with farm machinery. The principal disadvantage is the high labor requirement to operate the system.

E.4.3.2 End Tow Systems

End tow systems are multiple-sprinkler laterals mounted on skids or wheel assemblies to allow a tractor to pull the lateral intact from one position along the main to the next. As indicated in Figure E-5b, the lateral is guided by capstans to control its alignment. The pipe and sprinkler design considerations are identical to those for portable pipe systems with the exception that pipe joints are stronger than hand moved systems to accommodate the pulling requirements.

The primary advantages of an end tow system are lower labor requirements than hand moved systems, relatively low system costs, and the capability to be readily removed from the field to allow farm implements to operate. Disadvantages include crop restrictions to movement of laterals and cautious operation to avoid crop and equipment damage.

E.4.3.3 Side Wheel Roll

Side wheel roll or wheel move systems are basically lateral lines of sprinklers suspended on a series of wheels. The lateral line is aluminum pipe, typically 10.2 to 12.7 cm (4 to 5 in.) in diameter and up to 403 m (1,320 ft) long. The wheels are aluminum and are 1.5 to 2.1 m (5 to 7 ft) in diameter (see Figure E-6). The end of the lateral is connected by flexible hose to hydrants located along the main line. The unit is stationary during application and is moved between applications by an integral engine powered drive unit located at the center of the lateral (see Figure E-5c). The drive unit is controlled by an operator.

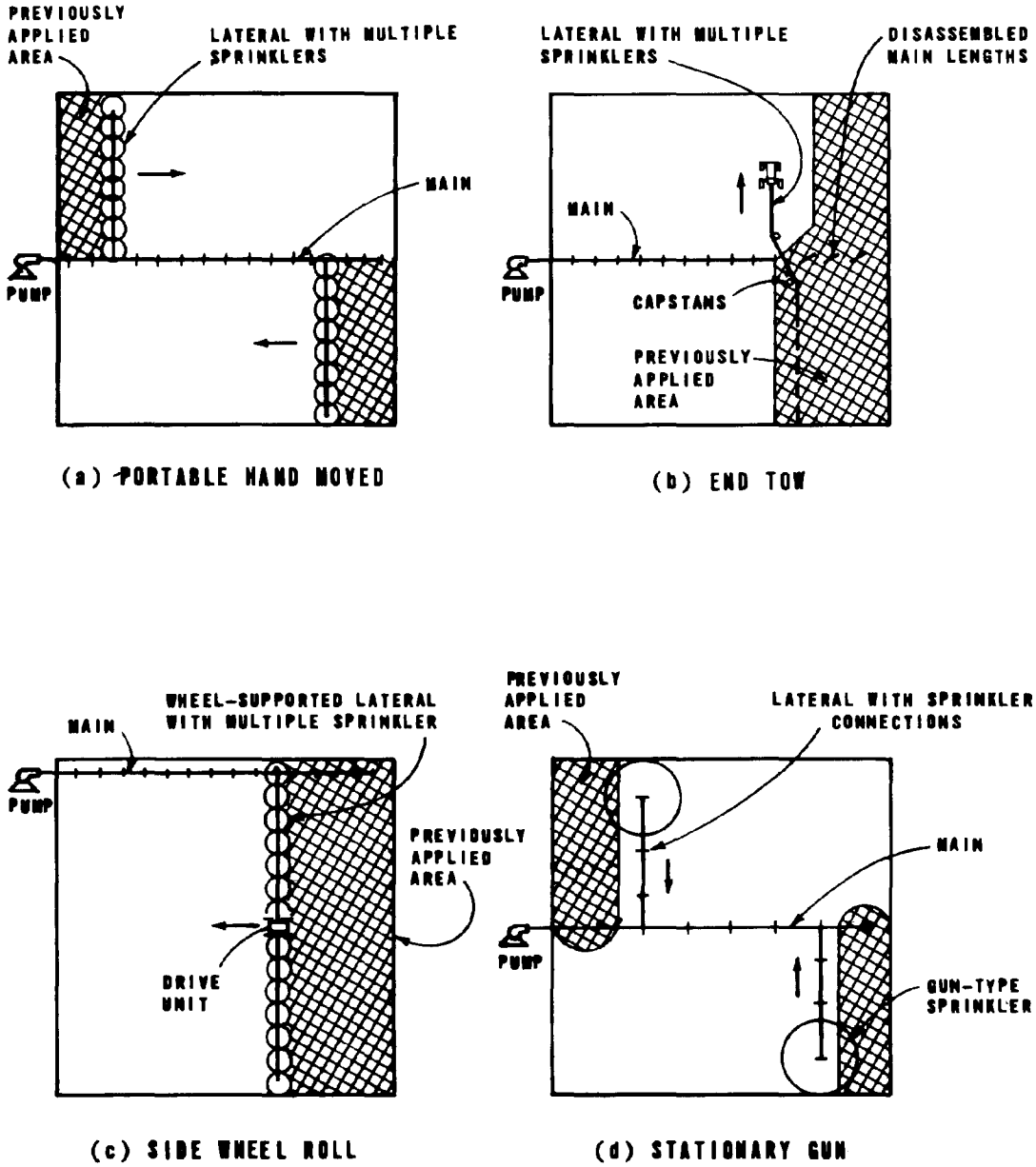

FIGURE E-5
MOVE-STOP SPRINKLER SYSTEMS

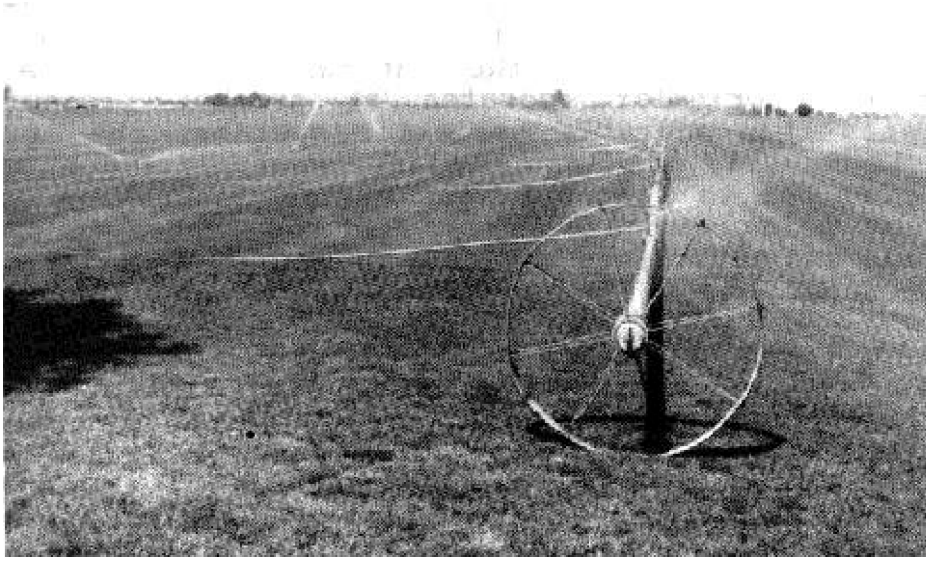

FIGURE E-6
SIDE WHEEL ROLL SPRINKLER SYSTEM

The sprinklers are mounted on swivel connections to ensure upright positions at all times. Sprinkler spacings are typically 9.2 to 12.5 m (30 or 40 ft) and wheel spacings may range from 9.2 to 30.5 m (30 to 100 ft). Side wheel laterals may be equipped with trail lines up to 27 m (90 ft) in length located at each sprinkler connection on the axle lateral. Each trail line has sprinklers mounted on risers spaced typically at 9 to 12 m (30 to 40 ft). Use of trail lines allows a larger area to be covered by a single unit, which reduces either the number of moves or the number of units required to cover a given field.

The principal advantages of side wheel roll systems are relatively low labor requirements and overall costs, and freedom from interference with farm implements. Disadvantages include restrictions to crop height and field shape, and misalignment of the lateral caused by uneven terrain.

E.4.3.4 Stationary Gun Systems

Stationary gun systems are wheel-mounted or skid-mounted single sprinkler units, which are moved manually between hydrants located along the laterals (see Figure E-5d). Since the sprinkler operates at greater pressures and flowrates than multiple sprinkler systems, the irrigation time is usually shorter. After an application has been completed for the lateral, the entire lateral is moved to the next point along the main. In some cases, a number of laterals and sprinklers may be provided to minimize movement of laterals.

The advantages of a stationary gun are similar to those of portable pipe systems with respect to capital costs and versatility. In addition, the larger nozzle of the gun-type sprinkler is relatively free from clogging. The drawbacks to this system are similar to those for portable pipe systems in that labor requirements are high due to frequent sprinkler moves. Power requirements are relatively high due to high pressures at the nozzle, and windy conditions adversely affect distribution of the fine droplets created by the higher pressures.

E.4.3.5 Design Procedures

The design procedures regarding application rate, sprinkler selection, sprinkler and lateral spacing, and lateral design for move-stop systems are basically the same as those described for solid set sprinkler systems. An additional design variable for move-stop systems is the number of units required to cover a given area. The minimum required number of units is a function of the area covered by each unit, the application frequency, and the period of application. More than the minimum number of units can be provided to reduce the number of moves required to cover a given area. The decision to provide additional units must be based on the relative costs of equipment and labor.

E.4.4 Continuous Move Systems

Continuous move sprinkler systems are self-propelled and move continuously during the application period. The three types of continuous move systems are (1) traveling gun, (2) center pivot, and (3) linear move. Schematics of the systems are shown in Figure E-7.

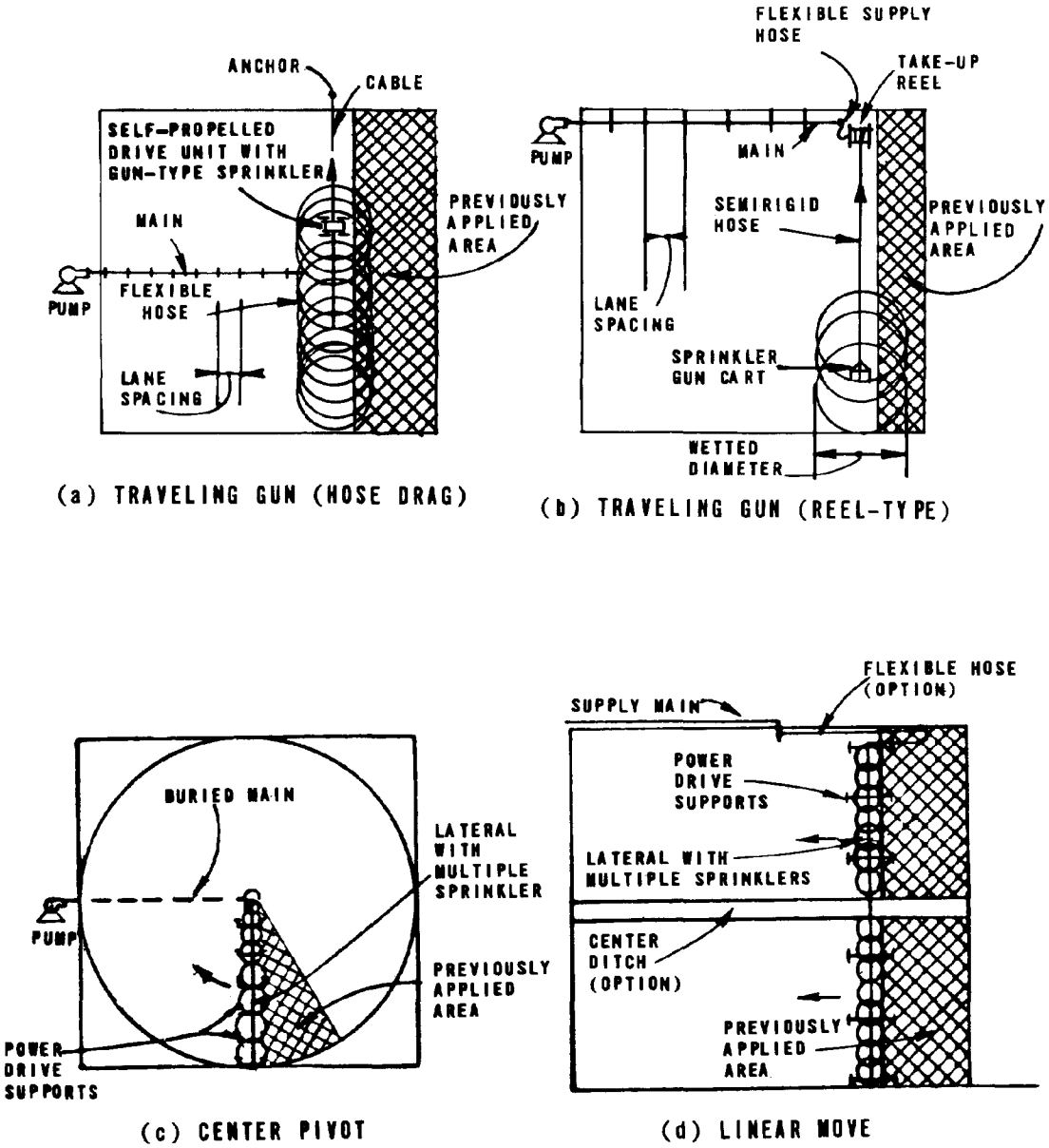

FIGURE E-7
CONTINUOUS MOVE SPRINKLER SYSTEMS

E.4.4.1 Traveling Gun Systems

Traveling gun systems are self-propelled, single large gun sprinkler units that are connected to the supply source by a hose 6.4 to 12.7 cm (2.5 to 5 in.) in diameter. Two types of travelers are available, the hose drag-type and the reeltype. The hose drag traveler is driven by a hydraulic or gas-driven winch located within the unit, or a gas-driven winch located at the end of the run (see Figure E-8). In both cases, a cable anchored at the end of the run guides the unit in a straight path during the application. The flexible rubber hose is dragged behind the unit. The reeltype traveler consists of a sprinkler gun cart attached to a take-up reel by a semirigid polyethylene hose. The gun is pulled toward the take-up reel as the hose is slowly wound around the hydraulic powered reel. Variable speed drives are used to control travel speeds. Typical lengths of run range between 201 and 403 m (660 and 1,320 ft), and spacings between travel lanes range between 50 and 100 m (165 and 330 ft). After application on a lane is complete, the unit shuts off automatically. Some units also shut off the water supply automatically. The unit must be moved by tractor to the beginning of the next lane.

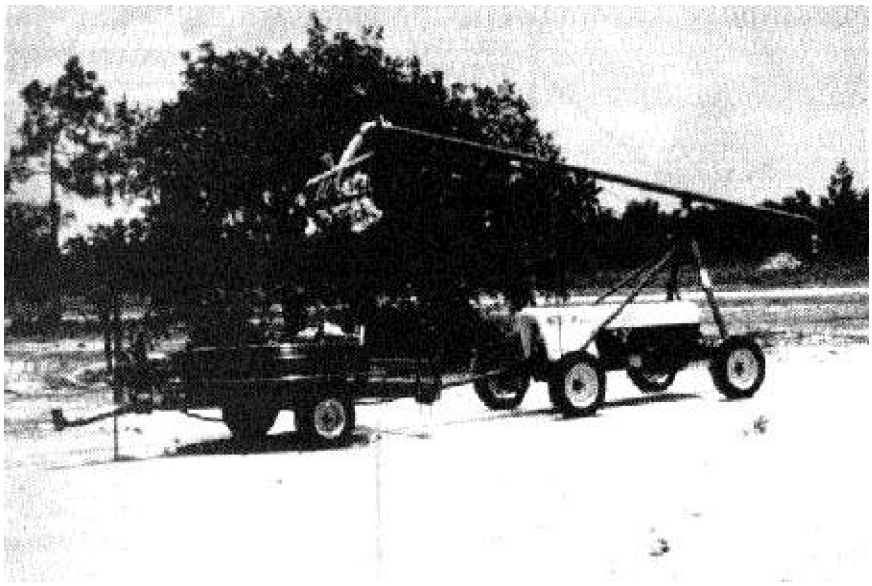

FIGURE E-8
HOSE-DRAG TRAVELING GUN SPRINKLER

The more important advantages of a traveling gun system are low labor requirements and relatively clog-free nozzles. They may also be adapted to fields of somewhat irregular shape and topography. Disadvantages are high power requirements, hose travel lanes required for hose drag units for most crops, and drifting of sprays in windy conditions.

In addition to the application rate and depth of application, the principal design parameters for traveling guns are the sprinkler capacity, spacing between travel lanes, and the travel speed.

The minimum application rate of most traveling gun sprinklers is about 0.6 cm/h (0.23 in./h), which is higher than the infiltration rate of the less permeable soils. Therefore, the use of traveling guns on soils of low permeability without a mature cover crop is not recommended. The relationship between sprinkler capacity, lane spacing, travel speed, and depth of application is given by the following equation:

$$D = \frac{q_s C}{(S_t)(S_p)} \qquad \text{(E-8)}$$

where D = depth of water applied, cm (in.)

q_s = sprinkler capacity, L/s (gal/min)

S_t = space between travel lanes, m (ft)

S_p = travel speed, m/min (ft/min)

C = conversion constant, 6.01 (1.60)

The usual design procedure is as follows:

1. Select a convenient application period (usually about 11 or 23 hours) to allow time (about 1 hour) for moves between applications.

2. Measure the longest travel lane length (403 m or 1,320 ft maximum for hose drag; 360 m or 1,180 ft maximum for reel-type) based on site boundaries.

3. Calculate the travel speed necessary to travel the longest travel lane in the desired application period.

4. Select a sprinkler and sprinkler operating pressure from manufacturers* performance tables with wetted diameters compatible with site boundaries and with application rates suitable for soil conditions. Sprinkler operating pressures should be above 55 N/cm^2 (80 $lb/in.^2$).

5. Compute the required lane spacing to provide the desired depth of water application using Equation E-8.

6. Check lane spacing against spacing criteria in Table E-8.

TABLE E-8
RECOMMENDED MAXIMUM LANE SPACING
FOR TRAVELING GUN SPRINKLERS

Wind speed		
km/h	(mi/h)	Lane spacing, % of wetted diameter
0	(0)	80
0-8	(0-5)	70-75
0-16	(0-10)	60-65
>16	(>10)	50-55

7. Adjust sprinkler selection and lane spacing as necessary to meet spacing criteria.

8. Select a hose size for the unit such that friction loss of the design sprinkler flow capacity does not exceed 28 N/cm^2 (40 $lb/in.^2$).

9. Determine the total area covered by a single unit

$$\text{Unit area, } m^2 = (S_t)(\text{avg travel distance per day}) \times (\text{days between application})$$

10. Determine total number of units required

$$\text{Units required} = (\text{field area, } m^2) \times (\text{unit area, } m^2)$$

11. Determine the system supply capacity (Q)

$$Q = (q_s)(\text{No. of units})$$

E.4.4.2 Center Pivot Systems

Center pivot systems consist of a lateral with multiple sprinklers or spray nozzles that is mounted on self-propelled, continuously moving tower units (see Figure E-9) rotating about a fixed pivot in the center of the field. Sprinklers on the lateral may be high pressure impact sprinklers; however, the trend is toward use of low pressure spray nozzles to reduce energy requirements. Water is supplied by a well or a buried main to the pivot, where power is also furnished. The lateral is usually constructed of 15 to 20 cm (6 to 8 in.) steel pipe 61 to 793 m (200 to 2,600 ft) in length. A typical system with a 393 m (1,288 ft) lateral covers a 64 ha (160 acre) parcel (see Figure E-10). The circular pattern reduces coverage to about 52 ha (130 acres), although systems with traveling end sprinklers are available to irrigate the corners.

The tower units are driven electrically or hydraulically and may be spaced from 24 to 76 m (80 to 250 ft) apart. The lateral is supported between the towers by cables or trusses. Control of the travel speed is achieved by varying the running time of the tower motors.

An important limitation of the center pivot system is the required variation in sprinkler application rates along the length of the pivot lateral. Because the area circumscribed by a given length of pivot lateral increases with distance from the pivot point (as does the ground speed of the unit), the application rate provided by the sprinklers along the lateral must increase with distance from the center to provide a uniform depth of application. Increasing the application rates can be accomplished by decreasing the spacing of the sprinklers along the lateral and increasing the sprinkler discharge capacity. The resulting application rates at the outer end of the pivot lateral can be unacceptable for many soils.

Application rates approaching 2.5 cm/h (1.0 in./h) may be necessary at a distance of 400 m (1,300 ft). The designer should be particularly aware of this limitation at sites where soil permeabilities vary within the pivot circle. Areas of slower permeability can be flooded, causing crop damage and traction problems for the drive wheels. This particular problem has been encountered at the Muskegon project. Determination of the proper sprinkler spacings and capacities for a center pivot rig is beyond the scope of this manual. The designer should consult the manufacturer for design details.

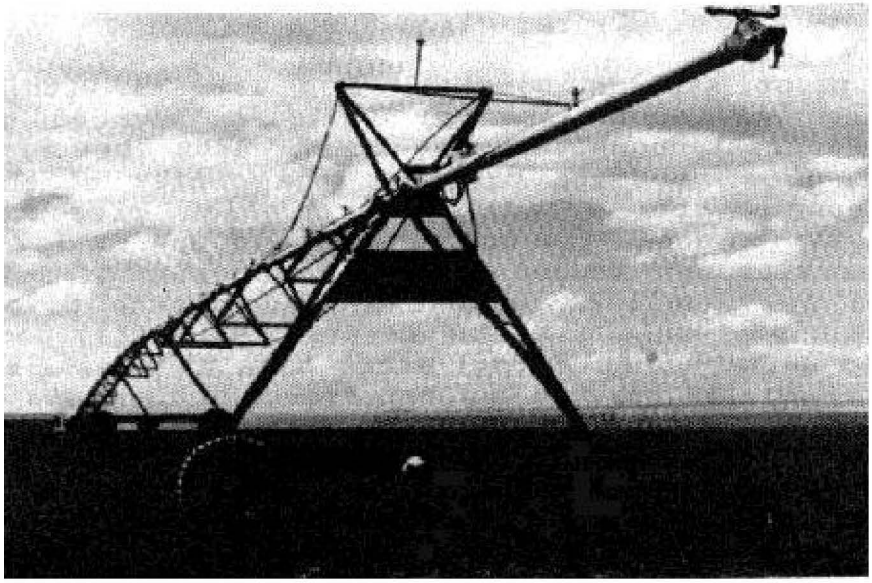

FIGURE E-9
CENTER PIVOT RIG

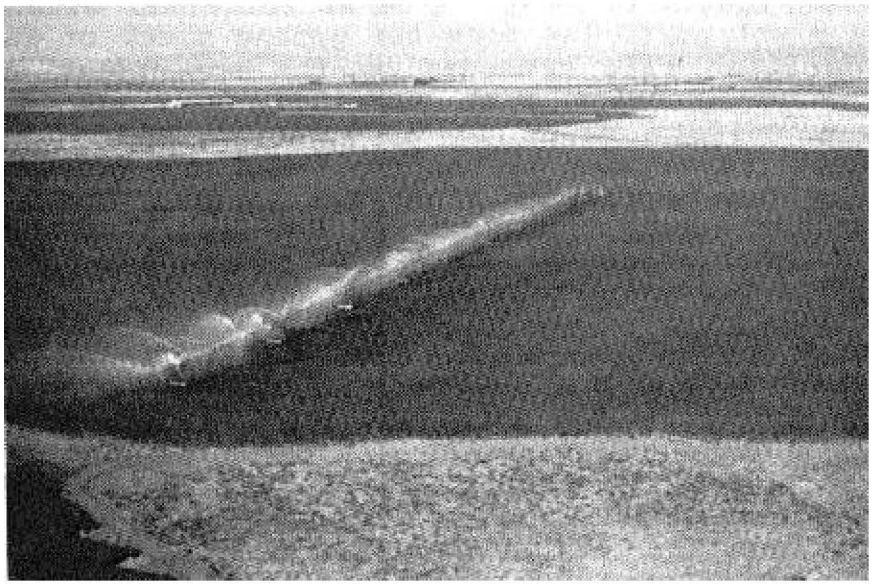

FIGURE E-10
CENTER PIVOT IRRIGATION SYSTEM

Another limitation of center pivots is mobility under certain soil conditions. Some clay soils can build up on wheels and eventually cause the unit to stop. Drive wheels can lose traction on slick (silty) soils and can sink into soft soils and become stuck.

E.4.4.3 Linear Move Systems

Linear move systems are constructed and driven in a similar manner to center pivot systems, except that the unit moves continuously in a linear path rather than a circular path. Complete coverage of rectangular fields can thus be achieved while retaining all the advantages of a continuous move system. Water can be supplied to the unit through a flexible hose that is pulled along with the unit or it can be pumped from an open center ditch constructed down the length of the linear path. Slopes greater than 5% restrict the use of center ditches. Manufacturers should be consulted for design details.

E.5 References

1. Booher, L.J. Surface Irrigation. FAO Agricultural Development Paper No. 94. Food and Agricultural Organization of the United Nations. Rome. 1974.

2. Merriam, J.L. and J. Keller. Irrigation System Evaluation: A Guide for Management. Utah State University, Logan, Utah. 1978.

3. McCulloch, A.W. et al. Lockwood-Ames Irrigation Handbook. W.R. Ames Company, Gering, Nebraska. 1973.

4. Hart, W.E. Irrigation System Design. Colorado State University, Department of Agricultural Engineering. Fort Collins, Colorado. November 10, 1975.

5. Border Irrigation. Irrigation, Chapter 4. SCS National Engineering Handbook, Section 15. U.S. Department of Agriculture, Soil Conservation Service. August 1974.

6. Fry, A.W. and A.S. Gray. Sprinkler Irrigation Handbook. Rain Bird Sprinkler Manufacturing Corporation, Glendora, California. 10th edition. 1971.

7. Sprinkler Irrigation. Irrigation, Chapter 11. SCS National Engineering Handbook, Section 15. U.S. Department of Agriculture, Soil Conservation Service. July 1968.

8. Pair, C.H. et al., eds. Sprinkler Irrigation, Fourth Edition. Sprinkler Irrigation Association. Silver Spring, Maryland. 1975.