APPENDIX J

Application: Upland Disposal Area GPS Control Survey--Manatee Harbor, FL (Jacksonville District)

GPS Survey Report for Manatee Harbor Upland Disposal Area Static Control Survey

Project: Manatee Harbor Upland Disposal, Plans and Specifications Scope Survey, Manatee Harbor, Manatee County, FL

Project No.: USACOE – 01-260, Foresight Surveyors, Inc. – 11058

Purpose: To verify and / or establish horizontal coordinates for the upland disposal site control.

Date for Work Done: October, 2001

Equipment Used: Trimble 4700 / 5700 Dual Frequency GPS Receivers in Static mode.

2 - 4700 (Part No. 35846-56): Serial No. 0220137053 0220137059

2 - 5700 (Part No. 40406-46): Serial No. 0220240528 0220240619

Control Points Used:

Horizontal Pts.: NGS and Manatee Co., M 006, M 007, M 009, M 011, and Gillette. (all are First Order Horizontal control points)

Vertical Pts.: US Army Corps Survey Points MAN MN H 0002, MAN MN H 0004, MAN MN H 0014, MAN MN H 0015, MAN MN H 0016, MAN MN H 0018, MAN MN H 0019, and JEG FLDNR 092 all of which are Second Order Vertical control points.

* Please see file 01-260Cntrl.doc for control point descriptions sheets.

Horizontal Datum / Projection Used: All coordinates are based on the 1983 North American Datum (83/86 adjustment), Florida West Zone (0902) of the State Plane Coordinate projection system. The units are U. S. Feet.

Vertical Datum Used: NGVD 1929, with the units being Feet.

Static Data Collection: All static data was collected using the following parameters:

Epoch logging rate: 15 sec.
Minimum logging time: 1 hr.
Elev. Mask of: 13 deg.
Minimum No. of Satellites: 5

Each static session utilized four (4) Trimble dual frequency GPS receivers collecting at least one hour of raw data simultaneously. The sessions were planned using independent baselines in order to build a geometrically strong and complete network. This network has a minimum of three baseline ties for each

of the thirteen points observed. For any sessions which required (because of logistics) the same receiver to repeat a session at the same point, the tripod / antenna setup would be broken down and re-setup.

Static Data Collection Cont:

No adverse types of weather conditions occurred during the days of data collection. The days were clear with higher numbers of satellites during the daylight hours. Overall the data collection phase of the network went well.

GPS Antenna Height Measurements:

4700 Antenna

The two Trimble 4700 GPS receivers used the Trimble Microcentered L1/L2 GPS antennas with Ground Planes (Part No. 33429-00) set on standard land surveying tripods with optical tribrachs. The antenna height for these two 4700 setups was measured using the Trimble, screw together, GPS Antenna HI Rod. Three measurements were taken around the sides of the antenna to give an average height from the top center of the monument to the bottom of the notch, at the outside of the ground plane (See R2 in diagram below). The three measurements were taken each time the antenna was setup.

Trimble Micro Centered L1/L2 GPS Antenna with Ground Plane (Part No. 33429-20)

	Dimensions		Descriptions
A	0.205 ft.	0.0625 m.	Bottom of antenna mount to Nominal Phase Center
B	0.011 ft.	0.0034 m.	Top of ground plane to Nominal Phase Center
C	0.022 ft.	0.0069 m.	Bottom of ground plane to Nominal Phase Center
R1	0.766 ft.	0.2334 m.	Radius to inside of ground plane notch
R2	0.792 ft.	0.2413 m.	Radius to outside of ground plane

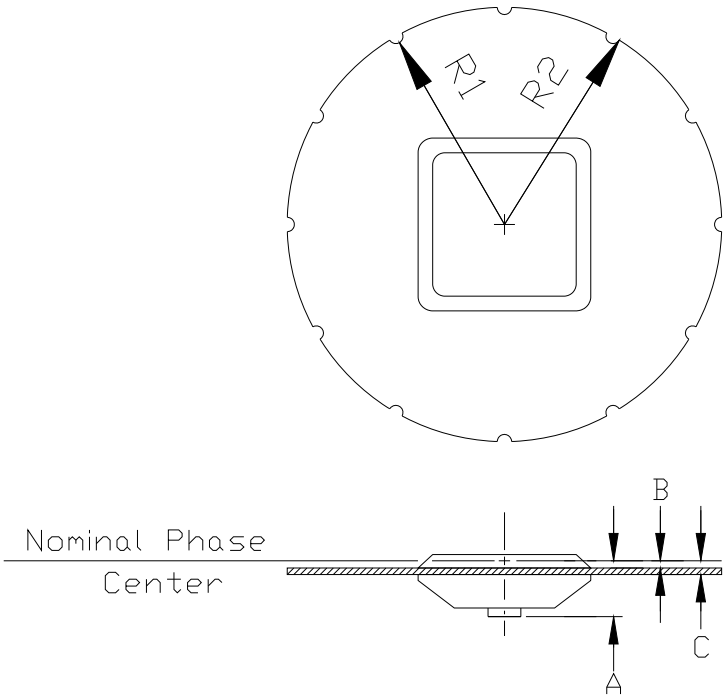

GPS Antenna Height Measurements Cont.:

Antenna / Tripod Setup for 4700 Receivers with Micro Centered L1/L2 Antenna

* Measurements were to the “outside, bottom of the ground plane notch”

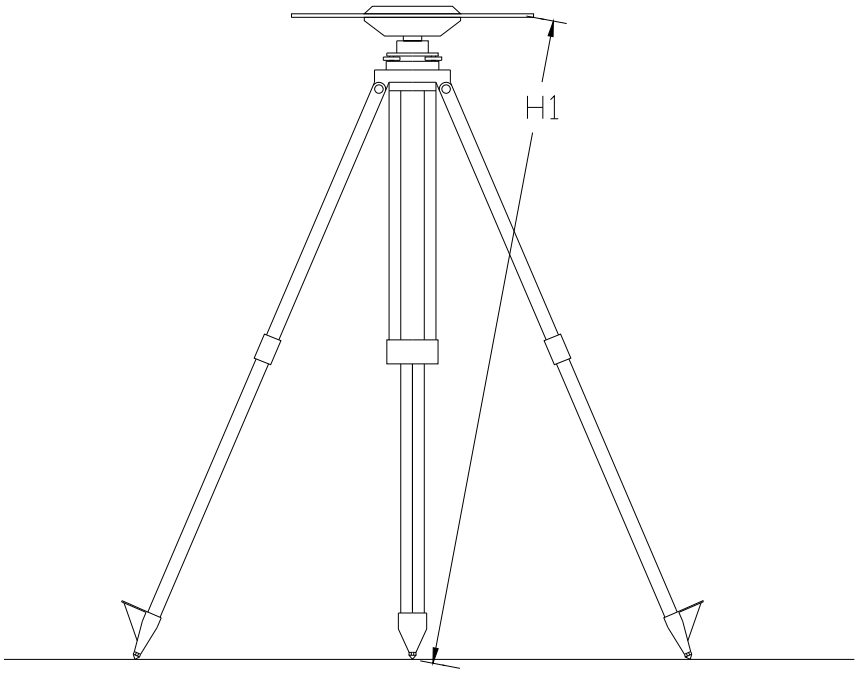

GPS Antenna Height Measurements Cont.:

5700 Antennas

The two 5700 receivers used the Trimble Zephyr GPS antennas. One had the Zephyr Geodetic (Base) antenna (Part No. 41249-00), which has a built in ground plane. The other receiver used the Zephyr (Rover) antenna (Part No. 39105-00) and it does not have a geodetic ground plane. Both receivers used 2.0 meter fixed height tripods and height measurements were from the top, center of the monument, to the bottom of the antenna mount. Using the fixed height tripod gave us a true height (not uncorrected) of 2.0m to the bottom of the antenna mount.

5700 Base Receiver using the Zephyr Antenna with Ground Plane:
(Receiver Serial No. 0220240619)

* See diagram below.

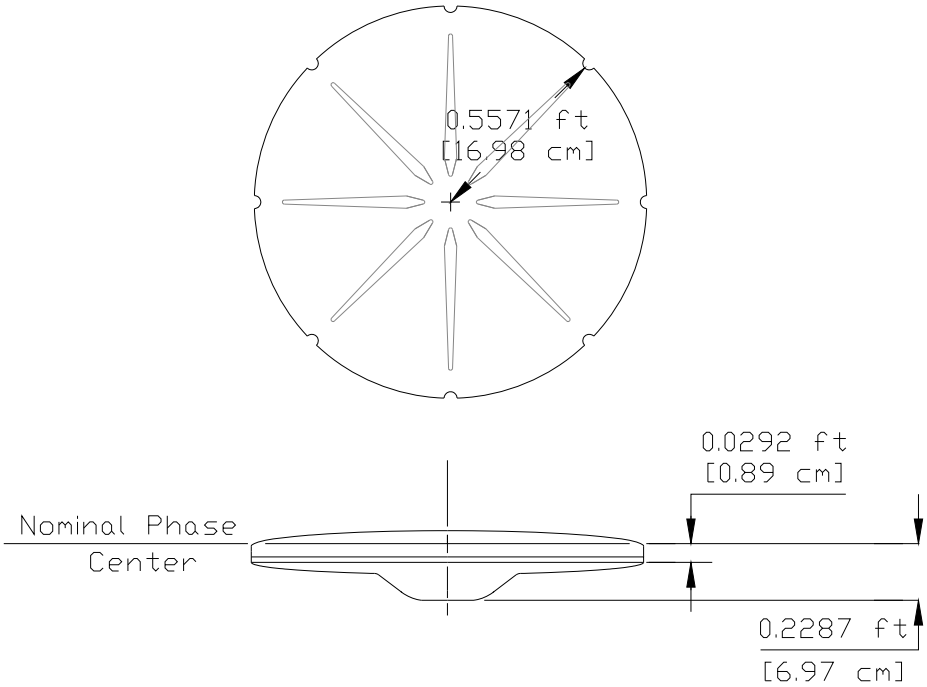

GPS Antenna Height Measurements Cont.:

Antenna/Tripod Setup for 5700 Base Receiver with Zephyr Antenna (with Ground Plane)

* This setup used a 2.0 meter fixed height tripod.

* Antenna height measurement was to the “bottom of the antenna mount”.

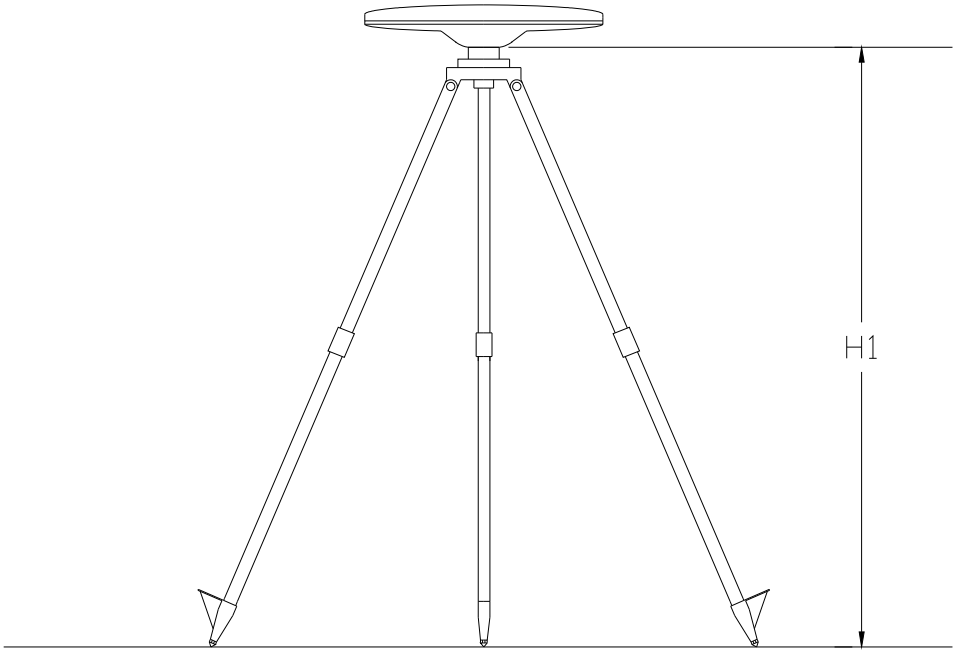

GPS Antenna Height Measurements Cont.:

5700 Rover Receiver using the Zephyr Antenna without Ground Plane:
(Receiver Serial No. 0220240528)

* See diagram below.

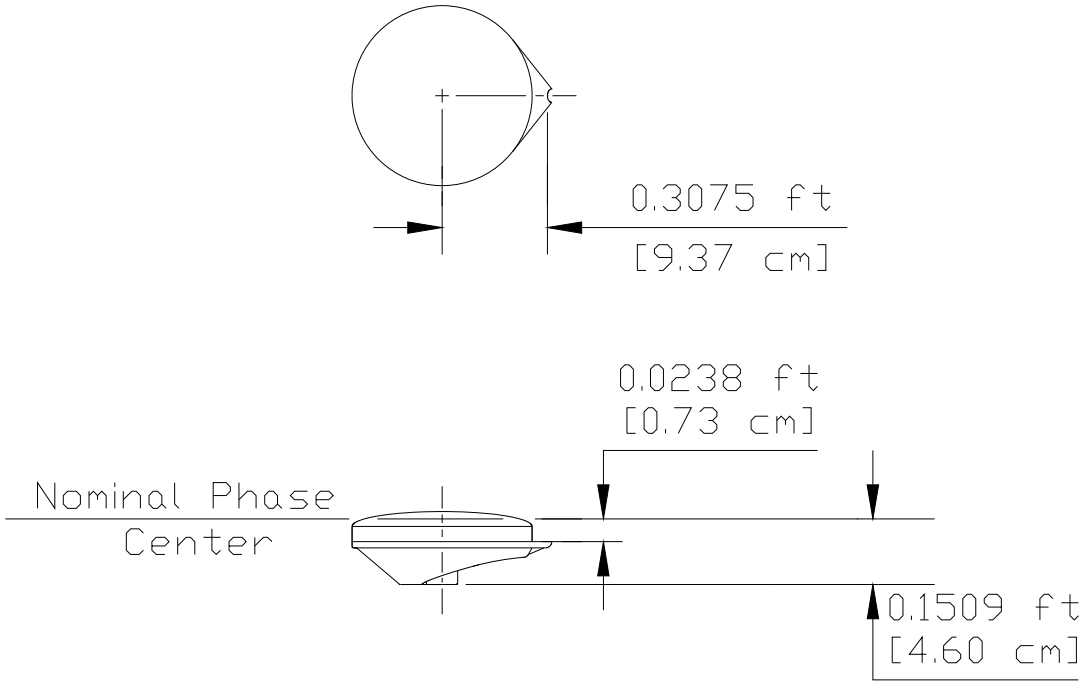

GPS Antenna Height Measurements Cont.:

Antenna/Tripod Setup for 5700 Rover Receiver, Zephyr Antenna (without Ground Plane)

* This setup used a 2.0 meter fixed height tripod.

* Antenna height measurement was to the “bottom of the antenna mount”.

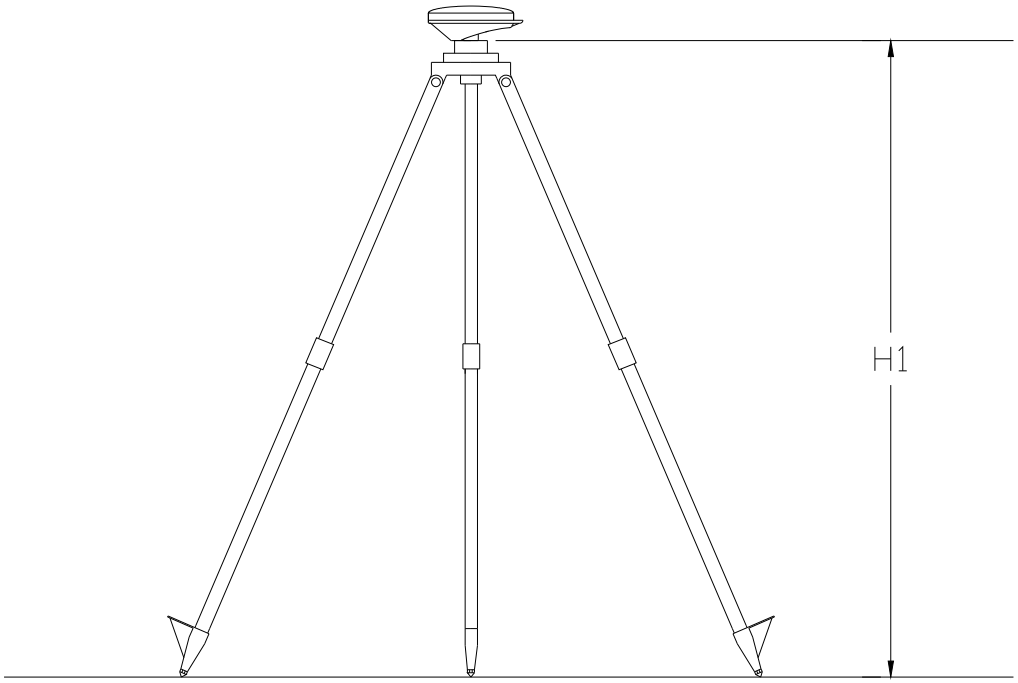

Baseline Processing and Adjustment: The post-processing was performed using Trimble's baseline processing software, Trimble Geomatics Office (TGO). The network configuration was built in TGO by selecting certain independent baselines. Once the baselines had been chosen and the known points had been "coordinate seeded", then the processing began. The network consisted of 5 known horizontal (First Order) points, 6 known vertical (Second Order) points, and 8 unknown points on which coordinates were established.

Network:
13 points (4 pts as "unknowns")
30 baselines
Longest baseline: 16064.1 US Ft.
Shortest baseline: 858.2 US Ft.
Average baseline: 7724.2 US Ft.

Network Configuration:

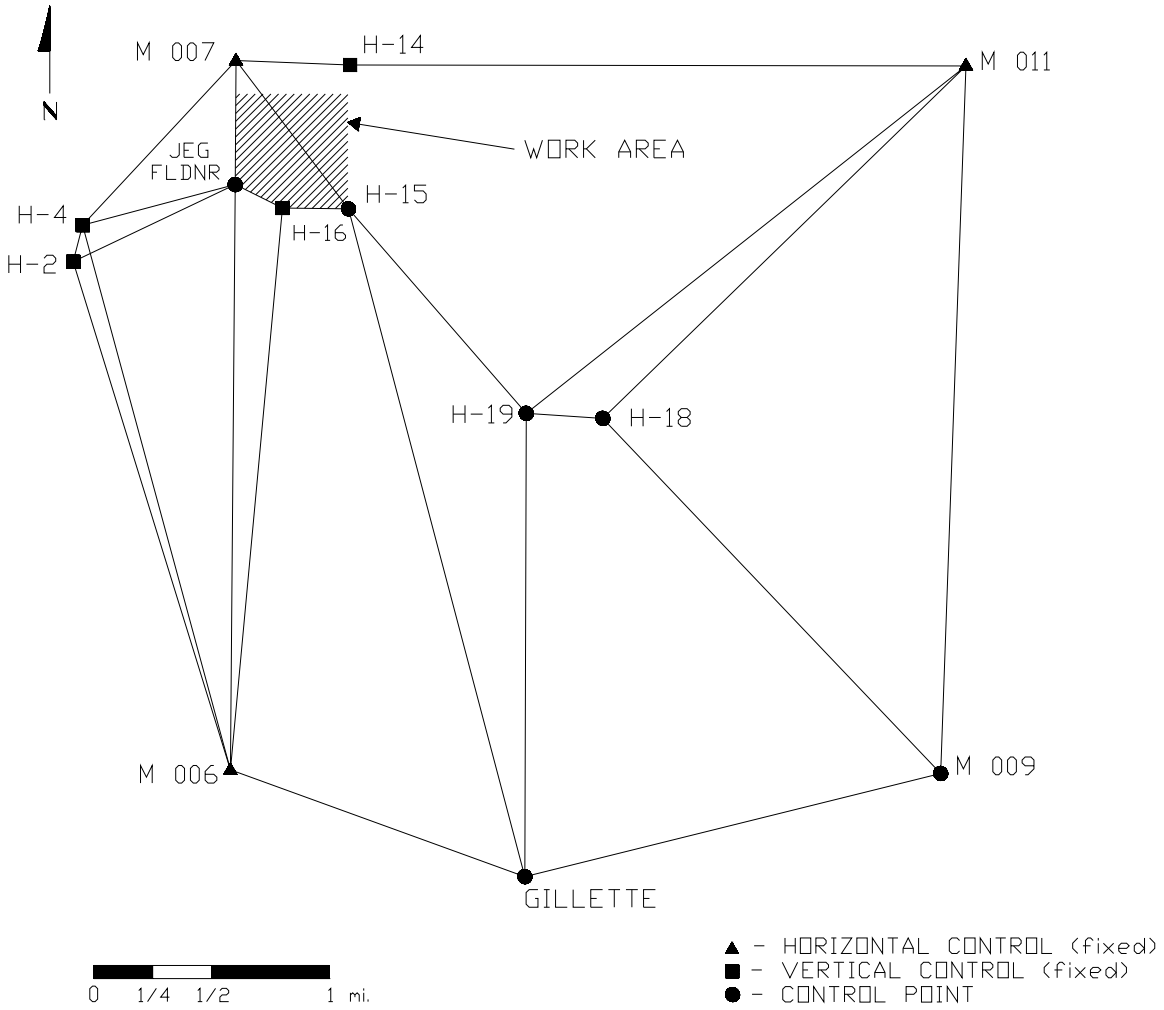

Baseline Processing and Network Adjustment Cont.

* For complete results please see the subdirectory 01260\Report\Final, which contains files:

GPS Vector Data.htm
BLSummary.html
Recompute Report.htm

The least squares adjustment procedure initially applied the proper amounts of weighting to account for the systematic and random errors, minimally constrained the network, then progressively held control points for the best fit overall. The points held fixed are listed below.

Horizontal Pts Held Fixed: NGS and Manatee Co., M 006, M 007, and M 011.

Horizontal Check Points: Gillette and M 009.

Vertical Pts Held Fixed: US Corps Survey Pts: MAN MN H 0002, MAN MN H 0004, MAN MN H 0014, MAN MN H 0016.

Vertical Check Points: MN MAN H 0015, MN MAN H 0018, MN MAN H 0019.

Again, the purpose of the network was to confirm the horizontal control being used and to establish NAD 83/86 coordinates on those surrounding control points. The network tied in well between the NGS points, but showed a difference with the given NAD 27 State Plane Coordinate values for points H-14, H-15, and H-16. The average difference between the known values and the static values was an average of N = 1.372 ft and E = 2.596 ft. The resulting values for the three control points (H-14, H-15, H-16) were different from the existing values, but consistent in the amount and direction that each of the points varied. The network results can be seen by viewing the point comparison chart on the next page and by viewing the listed files below.

Baseline Processing and Network Adjustment Cont.

Comparison of Known vs. Established Coords. for Port Manatee Disposal Area (11058, 01-260)

* Differences are Known values - GPS established values in US Ft.

Pt. No.	Northing	Easting	Elev.	Description	Control Use	Diff. N.	Diff. E.	Diff. El.
	1204123.388	481367.520	6.22	MN MAN H 0014	Fixed Cntrl (V)			
14	1204122.023	481365.022	6.22	H-14 GPS		1.365	2.498	0.00
	1200858.621	481330.503	10.06	MN MAN H 0015	Cntrl Check (V)			
15	1200857.194	481327.865	10.10	H-15 GPS		1.427	2.638	-0.04
	1200877.643	479829.576	8.34	MN MAN H 0016	Fixed Cntrl (V)			
16	1200876.318	479826.925	8.34	H-16 GPS		1.325	2.651	0.00
	1204223.158	478775.329	3.00	M 007	Fixed Cntrl (H)			
17	1204223.159	478775.329	3.67	M 007 GPS		-0.001	0.000	-0.67
			6.09	JEG FLDNR	Extra Cntrl			
18	1201407.569	478755.971	6.09	JEG FLDNR GPS				0.00
	1185702.573	485334.530	36.90	GILLETTE	Cntrl Check (H)			
20	1185702.566	485334.577	36.23	GILLETTE GPS		0.007	-0.047	0.67
	1199658.676	475077.876	7.93	MN MAN H 0002	Fixed Cntrl (V)			
21	1199657.705	475075.060	7.93	H-2 GPS		0.971	2.816	0.00
	1200489.510	475293.340	8.70	MN MAN H 0004	Fixed Cntrl (V)			
22	1200488.395	475290.494	8.70	H-4 GPS		1.115	2.846	0.00
	1196102.473	487107.435	27.06	MN MAN H 0018	Extra Cntrl			
23	1196102.242	487105.881	26.81	H-18 GPS		0.231	1.554	0.25
	1196217.929	485367.492	18.92	MN MAN H 0019	Extra Cntrl			
24	1196217.498	485365.950	18.63	H-19 GPS		0.431	1.542	0.30
	1188126.786	478648.027	4.00	M 006	Fixed Cntrl (H)			
25	1188126.787	478648.027	3.26	M 006 GPS		-0.001	0.000	0.75
	1188044.468	494781.041	27.00	M 009	Cntrl Check (H)			
26	1188044.478	494781.032	27.51	M 009 GPS		-0.010	0.009	-0.51
	1204097.907	495355.333	20.00	M 011	Fixed Cntrl (H)			
27	1204097.907	495355.333	21.13	M 011 GPS		0.000	0.000	-1.13

Results are also listed in the subdirectory 01260\Report\Final, which contains files:

Network Adjustment Report.html
Loopclosure.html
PtCompare.xls

Baseline Processing and Network Adjustment Cont.

The resulting coordinates are being given in two different forms: Latitude, Longitude, and Ellipsoid Height (NAD 83/86, US Feet), as well as State Plane Coordinates (NAD 83/86, Florida West Zone (0902), US Feet).

Horiz Datum: NAD 83 (86)
Vert. Datum: Ellipsoid Height, Feet

Pt. Name	Latitude	Longitude	Height	Description
14	27 38 42.94971 N	82 32 23.78105 W	-74.10	MN MAN H 0014
15	27 38 10.61915 N	82 32 24.03548 W	-70.21	MN MAN H 0015
16	27 38 10.74326 N	82 32 40.72479 W	-71.94	MN MAN H 0016
17	27 38 43.83820 N	82 32 52.58217 W	-76.61	M 007
18	27 38 15.95690 N	82 32 52.65850 W	-74.18	JEG FLDNR
20	27 35 40.72588 N	82 31 38.76784 W	-44.82	GILLETTE
21	27 37 58.46608 N	82 33 33.49749 W	-72.27	MN MAN H 0002
22	27 38 06.70136 N	82 33 31.14401 W	-71.51	MN MAN H 0004
23	27 37 23.78053 N	82 31 19.56840 W	-53.56	MN MAN H 0018
24	27 37 24.84864 N	82 31 38.91726 W	-61.72	MN MAN H 0019
25	27 36 04.44314 N	82 32 53.20380 W	-76.95	M 006
26	27 36 04.30391 N	82 29 53.87980 W	-52.93	M 009
27	27 38 43.29243 N	82 29 48.21374 W	-59.41	M 011

Horiz Datum / Proj :NAD 83 (86), SPC FL West Zone (0902), US Feet
Vert. Datum: NGVD 1929, Feet (from network)

Pt. Name	Northing	Easting	Elev.	Description
14	1204122.023	481365.022	6.22	MN MAN H 0014
15	1200857.194	481327.865	10.10	MN MAN H 0015
16	1200876.318	479826.925	8.34	MN MAN H 0016
17	1204223.158	478775.329	3.67	M 007
18	1201407.569	478755.971	6.08	JEG FLDNR
20	1185702.573	485334.530	36.23	GILLETTE
21	1199657.705	475075.060	7.93	MN MAN H 0002
22	1200488.395	475290.494	8.70	MN MAN H 0004
23	1196102.242	487105.881	26.82	MN MAN H 0018
24	1196217.498	485365.950	18.62	MN MAN H 0019
25	1188126.786	478648.027	3.25	M 006
26	1188044.468	494781.041	27.51	M 009
27	1204097.907	495355.333	21.13	M 011

Coordinates can also be found in the subdirectory 01260\Report\Final, which contains files:
01-260LLH.doc
01-260NEE.doc

End of Report