DEPARTMENT OF THE ARMY
U.S. Army Corps of Engineers
Washington, DC 20314-1000

ETL 1110-3-510

CECW-CE

Technical Letter
No. 1110-3-510

31 May 2013

EXPIRES 31 MAY 2018

Engineering and Design

AVIATION COMPLEX PLANNING AND DESIGN CRITERIA FOR UNMANNED AIRCRAFT SYSTEMS (UAS)

1. Purpose. This Engineering Technical Letter (ETL) provides guidance and criteria for planning and designing runways and ancillary movement areas that support operations of US Army (USA)/US Air Force (USAF)/US Navy wheeled/skid UAS presently fielded or has a program of record by 2012.

2. Applicability. This ETL applies to Department of Army commands having responsibility for planning, design, and/or management of airfields to support Army (DA), Air Force (USAF), and Navy (USN) Unmanned Aircraft Systems (UAS).

3. Distribution Statement. Approved for public release; distribution is unlimited.

4. References. References are included in Appendix A.

5. Implementation Date: Immediately

FOR THE COMMANDER:

JAMES C. DALTON, P.E., SES
Chief, Engineering and Construction
Directorate of Civil Works

4 Appendices
Appendix A - Aviation Complex Planning And Design Criteria for Army/Air Force/ Navy Fixed Wing Unmanned Aircraft Systems (UAS)
Appendix B - Contingency Operations
Appendix C - Helicopter Unmanned Aircraft Systems
Appendix D - Frangibility Requirements

This ETL supersedes ETL 1110-3-506, dated 1 March 2011.

APPENDIX A

Aviation Complex Planning and Design Criteria for Army /Air Force Unmanned Aircraft Systems (UAS)

A-1. Intended Users.

a. Army Corps of Engineers.

b. Air Force Prime BEEF and RED HORSE units.

c. Construction contractors designing, building and expanding DoD airfields.

d. Other organizations responsible for airfield construction.

e. Organizations responsible for maintenance and operations of UAS airfields/runways.

A-2. Referenced Publications.

a. Air Force:

(1) Technical Manual 1Q-4(R) A-2-DB-1, 22 April 2008, Version 07.12.001, RAC#7, *Global Hawk Technical Orders*, 303d AESG/LG, WPAFB, OH 45433.

(2) Flight Manual TO 1Q-1(M)B-1, *MQ-1B System*, Ch3, 11 January 2012, Det 3, 658 AESS, 16761 Via Del Campo Court, San Diego, CA 92127.

(3) Flight Manual TO 1Q-9(M)A-1, *USAF Series MQ-9A Aircraft*, Ch4,,20 July 2011 Det 3, 658 AESS, 16761 Via Del Campo Court, San Diego, CA 92127.

b. Army:

(1) Technical Manual (DRAFT), * TM DTM 1-1550-696-10, Operator's Manual for MQ-1C QRC Unmanned Aircraft System Block 1, 9 October 2009. Unmanned Aircraft Systems Project Office, Building 5300, ATTN: SFAE-AV-UAS, Redstone Arsenal, AL 35898.

(2) Technical Manual 1-1550-692-10, Operator's Procedures for the Hunter MQ-5B Unmanned Air Vehicle System (UAS), September 2008. Unmanned Aircraft Systems Project Office, Building 5300, ATTN: SFAE-AV-UAS, Redstone Arsenal, AL 35898.

(3) Technical Manual, TM 1-1550-689-10-1 and TM 1-1550-689-10-2, Operator's Manual for Shadow 200 Tactical Unmanned Aircraft System (TUAS), 1 October 2009, Unmanned

Aircraft Systems Project Office, Building 5300, ATTN: SFAE-AV-UAS, Redstone Arsenal, AL 35898.

c. Navy:

(1) A1-MQ8BA-NFM-000, NATOPS Flight Manual, *Navy Model MQ-8B, Unmanned Aerial Vehicle*, Program Executive Office - Unmanned Aviation & Strike Weapons, PEO (U&W) PMA-266, Multi-Mission Tactical Unmanned Air Systems, 22707 Cedar Point Road, Building 3261, Patuxent River, Maryland 20670-1547.

d. Unified Facilities Criteria (UFC), UFC 3-260-01, Aviation Facilities Planning and Design.

e. UFC 3-535-01, Visual Navigation Facilities.

f. UFC 3-260-02.

g. Air Force Instruction (AFI) 32-7063, Air Installation Compatible Use Zone Program.

h. Federal Aviation Administration Order (FAAO) 7400.2.

i. Department of Defense Directive (DoDD) 6050.1, Environmental Effects in the U.S. of DoD Actions.

j. Department of Defense Directive (DoDD) 6050.7, Environmental Effects Abroad of Major DoD Actions.

k. Department of Defense Instruction (DoDI) 4165.57, Air Installation Compatible Use Zones (AICUZ).

A-3. Definitions.

a. Acronyms:

AAF – Army Airfield
ACN – Aircraft Classification Number
AFB – Air Force Base
AFJPAM – Air Force Joint Pamphlet
AICUZ – Air Installation Compatible Use Zones
APZ – Accident Potential Zone
AR – Army Regulation
ARNG – Army National Guard
ASC/658 AESG – Aeronautical Systems Center, 658 Aeronautical Systems Group

C – Celsius
CATEX – Categorical Exclusion
CBR – California Bearing Ratio
cm - centimeter
DA – Density Altitude
db – decibels
DNL – Day-night average sound level
DoD – Department of Defense
EAIP – Environmental Impact Analysis Process
EA – Environmental Assessment
EIS – Environmental Impact Statement
ETL – Engineering Technical Letter
F – Fahrenheit
FAA – Federal Aviation Administration
FM – Field Manual
FONSI - Finding of No Significant Impact
ft – feet
GTOW – Gross Takeoff Weight
GCS – ground control station
GDT – ground data terminal
ICAO – International Civil Aviation Organization
IFR – Instrument Flight Rules
in – inches
k – modulus of subgrade reaction
kPa - Kilopascal
lbs – pounds
m – meter
mm - millimeter
MLG – Main Landing Gear
mph – miles per hour
MQ – Multi-role unmanned aircraft system
NATO – North Atlantic Treaty Organization
NAVAID – Navigational Aid
NEPA – National Environmental Policy Act
NLG – Nose Landing Gear
PCASE – Pavement-Transportation Computer Aided Structural Design and Evaluation
pci – pound per cubic inch
PCN – Pavement Classification Number
PGCS – portable ground control station
PGDT – portable ground data terminal
Prime BEEF —Prime Base Engineer Emergency Force
psi – pound per square inch
psig – pound per square inch gauge

RCR – Runway Condition Rating
RED HORSE– – Rapid Engineers Deployable Heavy Operations Repair Squadron
RQ – Reconnaissance unmanned aircraft system

TALS – Tactical Automated Landing System
TALS-TS - Tactical Automated Landing System – Tracking System
TDP – Touchdown point
TM – Technical Manual
T/O – Take-Off
TSC – Transportation Systems Center
UAS – Unmanned Aircraft System(s)
UPS – Uninterruptible power supply
VCSA – Vice Chief of Staff of the Army
VFR – Visual Flight Rules

b. Terms:

Pass – The movement of an aircraft over a specific spot or location on a pavement feature.
Sun Screen – A cover, usually semi circular in shape to protect aircraft from the sun's ultraviolet rays

c. Aircraft Covered in this ETL:

RQ-4A/B Global Hawk
MQ-9A Reaper
MQ-1B Predator
MQ-1C Gray Eagle
MQ-5B Hunter
RQ-7A/B Shadow 200
MQ-8 Fire Scout (see Appendix C)

A-4. Aircraft Characteristics.

Table A-1 RQ-4A/B Global Hawk

	RQ-4A	**RQ-4B**
Wing Span (ft)	116.2	130.9
Length (ft)	44.4	47.6
Height (ft)	15.2	15.4
Vertical Clearance (in)	19.5	20.65
Tread (ft)	10.6	21.1
Wheel Base (ft)	14.8	15.4
Pivot Point (ft)	75	31.24
Aircraft Turning Radius (ft)	67	20.7
Controlling Gear	Main	Main
180° Turn (ft)	133	97
Basic Empty Gross Weight (lbs)	11,900	15,317
Basic Mission Take-Off (T/O) Weight (lbs)	26,750	32,190
Basic Mission Landing Weight (lbs)	12,900	16,325
Max Landing Gross Weight (lbs)	26,500	32,250
Take-Off Distance, Ground Roll (ft) *	3,500	4,800
Take-Off Distance, to 50-ft (ft)	4,300	5,800
Landing Distance, Ground Roll (ft) *	8,000	7,800
Landing Distance, from 50-ft (ft)	See Note	See Note
Assembly Configuration	Twin Tricycle	Single Tricycle
% of Gross Load on Assembly	88.5% on Main	89.5% on Main
Tire Pressure, Nose Gear (at Max T/O weight)	88-98 psig	109-119 psig
Tire Pressure, Main Gear (at Max T/O weight)	201-206 psig	289-299 psig

* On zero runway gradient and a clean, dry runway surface.

Note: Not applicable since block 10 (RQ-4A) typically flares between 45 ft (Above Ground Level [AGL]) to 55 ft (AGL) over the runway. The flare initiation altitude is a function of sink rate. Mission planners build landing approach for a 4.5 degree glide slope (with engine on) and 5.25 degree (engine out). They survey the area for terrain and obstacle clearance required to safely fly on the glide slope autonomously.

Table A-2 MQ-9A Reaper

Wing Span (ft)	66
Length (ft)	36.2
Height (ft)	11.8
Vertical Clearance (in)	20
Tread (in)	12
Wheel Base (ft)	10.1
Pivot Point (ft)	32 to inside wing tip
Aircraft Turning Radius (ft)	62 to outside wing tip
Controlling Gear	Nose Landing Gear (NLG) steering servo at slower speeds (<20kts) and Main Landing Gear (MLG) differential braking at higher taxi speeds
180° Turn (ft)	196
Basic Empty Gross Weight (lbs)	4,900
Basic Mission Take-Off Weight (lbs)	10,500
Basic Mission Landing Weight (lbs)	8,500
Max Landing Gross Weight (lbs)	10,500
Take-Off Distance, Ground Roll (ft) *	5255 (8000ft alt, std day)
Take-Off Distance, to 50-ft (ft)	6000 (8000ft alt, std day)
Landing Distance, Ground Roll (ft) *	3076 (8000ft alt, std day)
Landing Distance, from 50-ft (ft)	5,000
Assembly Configuration	Single Tricycle
% of Gross Load on Assembly	92-94% of weight on MLG
Tire Pressure, Nose Gear (at Max T/O weight)	132 psig
Tire Pressure, Main Gear (at Max T/O weight)	170 psig

* On zero runway gradient and a clean, dry runway surface

Table A-3 MQ-1B Predator

Wing Span (ft)	48.7 55.25 (Block 10 & 15)
Length (ft)	27.0
Height (ft)	6.9
Vertical Clearance (in)	19.1
Tread (in)	9.1
Wheel Base (ft)	10.2
Pivot Point (ft)	40
Aircraft Turning Radius (ft)	90
Controlling Gear	NLG steering servo at slower speeds (<20kts) and MLG differential braking at higher taxi speeds
Pivot Point Turn 180° Turn (ft)	67 outside wheel
Basic Empty Gross Weight (lbs)	1904
Basic Mission Take-Off Weight (lbs)	2250
Basic Mission Landing Weight (lbs)	2000
Max Landing Gross Weight (lbs)	2250
Take-Off Distance, Ground Roll (ft) *	2600 (8000ft alt, std day)
Take-Off Distance, to 50-ft (ft)	6200 (8000ft alt, std day)
Landing Distance, Ground Roll (ft) *	1425 (8000ft alt, std day)
Landing Distance, from 50-ft (ft)	2475 (8000ft alt, std day)
Assembly Configuration	Single Tricycle
% of Gross Load on Assembly	90% on main assumed
Tire Pressure, Nose Gear (at Max T/O weight)	45±2 psig
Tire Pressure, Main Gear (at Max T/O weight)	50±2 psig

* On zero runway gradient and a clean, dry runway surface

Table A-4 MQ-1C Gray Eagle

Wing Span (ft)	56.3
Length (ft)	28.97 (includes Angle of Attack Probe)
Height (ft)	9.8 - Level (Individual aircraft loading will affect overall height and ground clearance)
Vertical Clearance (in)	18
Tread (ft)	9.75
Wheel Base (ft)	10.6
Controlling Gear	Main
180° Turn (ft)	96.8 Outside wing tip 49.4 Outside wheel
90° Turn (ft)	48.4 Outside wing tip 24.7 Outside wheel
Tread (in)	5.1
Basic Empty Gross Weight (lbs)	2550
Basic Mission Take-Off Weight (lbs)	3200-3600
Basic Mission Landing Weight (lbs)	3200
Max Landing Gross Weight (lbs)	3200
Take-Off Distance, Ground Roll (ft) *	2590
Take-Off Distance, to 50 ft	5000
Landing Distance, Ground Roll (ft) *	3925
Landing Distance, from 50 ft	5400
Assembly Configuration	Single Tricycle
% of Gross Load on Assembly	95% on Main (assumed)
Tire Pressure, Nose Gear (at Max T/O weight)	70±5psi
Tire Pressure, Main Gear (at Max T/O weight)	70±5psi

***** On zero runway gradient and a clean, dry runway surface

Table A-5 MQ-5B Hunter

Wing Span (ft)	34.67
Length (ft)	23
Height (ft)	6.1
Vertical Clearance (in)	77.7
Tread (in)	5.1
Wheel Base (ft)	6.6
Aircraft Turning Radius (ft)	97.5
Controlling Gear	Nose – NOTE: Taxiing is conducted with personnel or a tow vehicle
Basic Empty Gross Weight (lbs)	1475
Basic Mission Take-Off Weight (lbs)	1950
Basic Mission Landing Weight (lbs)	Varies
Max Landing Gross Weight (lbs)	1950
Take-Off Distance, Ground Roll (ft) *	1275
Landing Distance, Ground Roll (ft) *	2200
Assembly Configuration	Single Tricycle
% of Gross Load on Assembly	95% on Main assumed
Tire Pressure, Nose Gear (at Max T/O weight)	71 ±2psi
Tire Pressure, Main Gear (at Max T/O weight)	71 ±2psi

***** On zero runway gradient and a clean, dry runway surface

Table A-6 RQ-7A/B Shadow 200

Wing Span (ft)	19.8
Length (ft)	11.93
Height (ft)	3.17
Vertical Clearance (in)	5 approx. (bottom of prop)
Tread (in)	37
Wheel Base (in)	39
Controlling Gear	Main
Basic Empty Gross Weight (lbs)	350
Basic Mission Take-Off Weight (lbs)	467
Basic Mission Landing Weight (lbs)	365
Max Landing Gross Weight (lbs)	467
Take-Off Distance, Ground Roll (ft)	NA
Landing Distance, Ground Roll (ft)	Variable
Landing Distance, from 50-ft (ft)	1700
Assembly Configuration	Single Tricycle
% of Gross Load on Assembly	95% on Main (assumed)
Tire Pressure, Nose Gear (at Max T/O weight)	35 ±1psi
Tire Pressure, Main Gear (at Max T/O weight)	35 ±1psi

Figure A-1. RQ-4A Global Hawk Dimensions

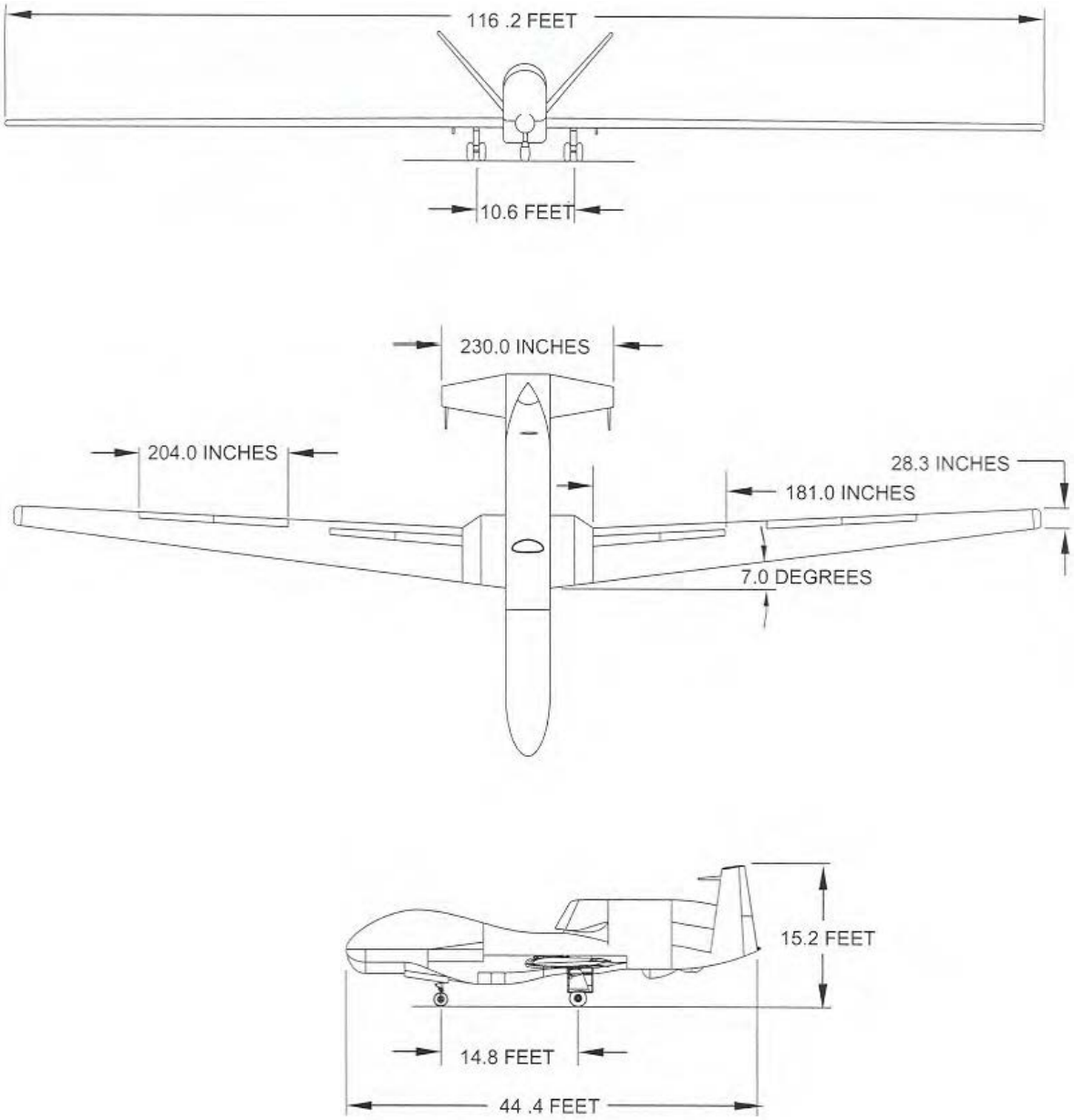

Figure A-2. RQ-4A Clearances and Turning Radii

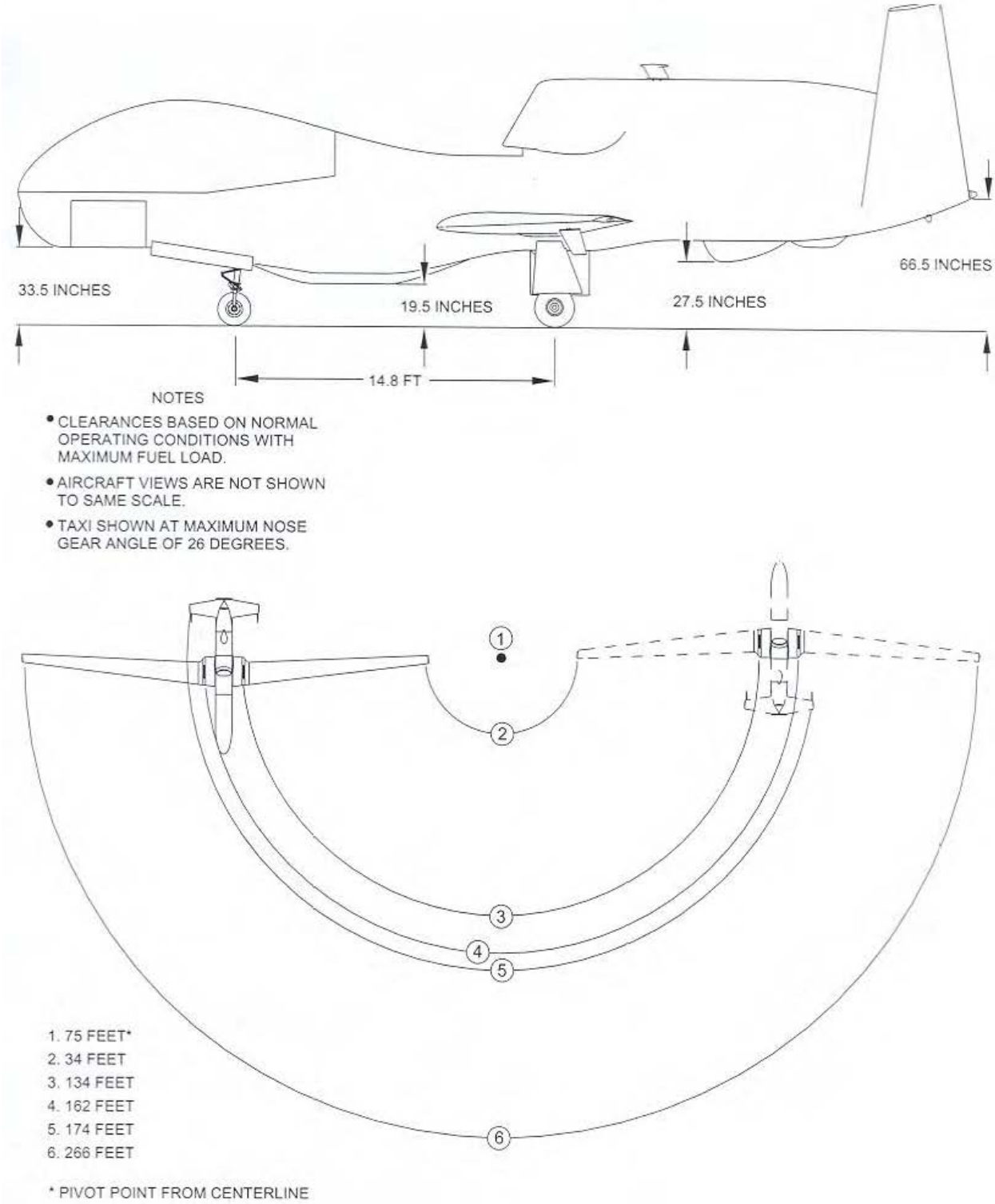

Figure A-3. RQ-4B Dimensions

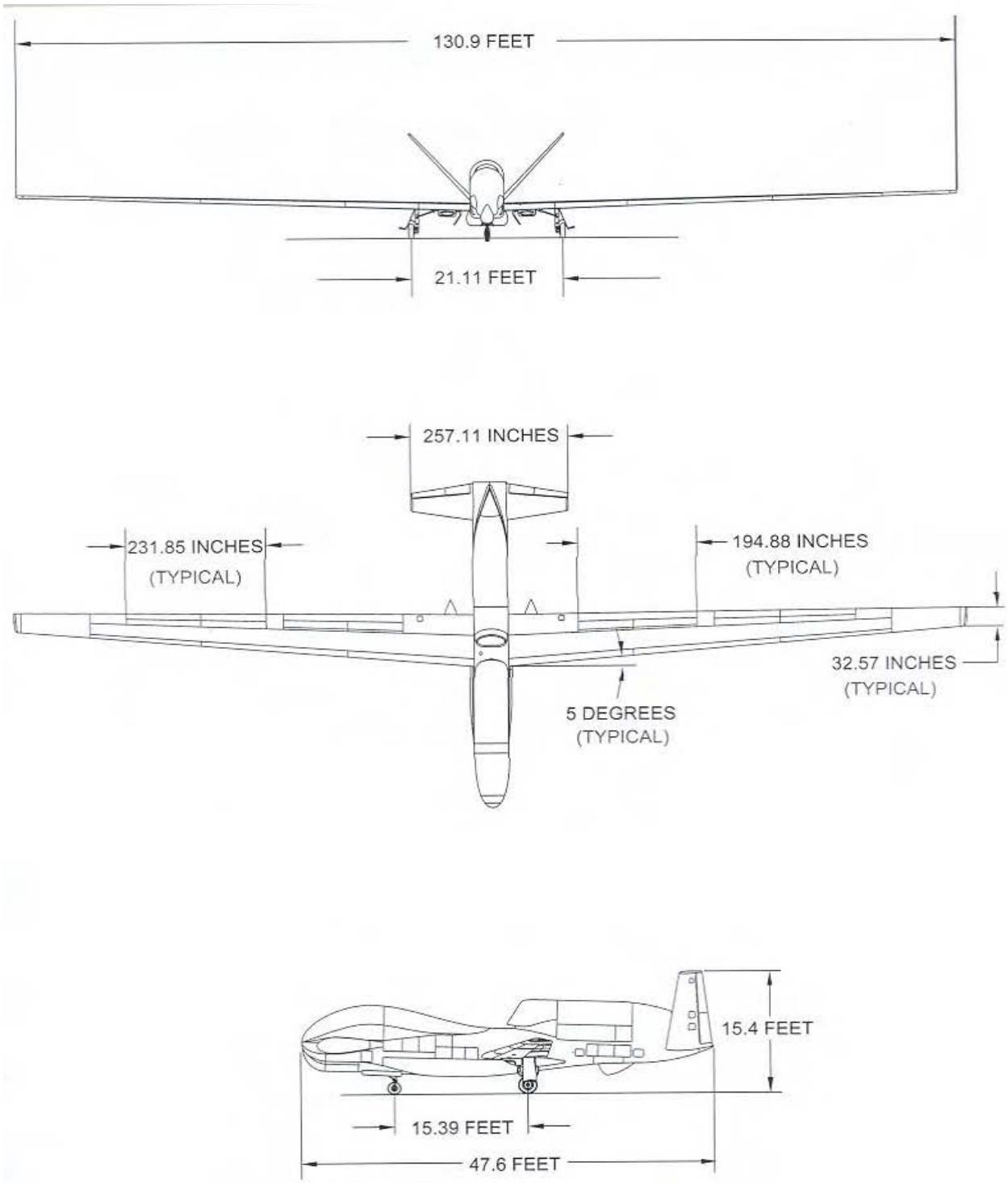

Figure A-4. RQ-4B Clearances and Turning Radii

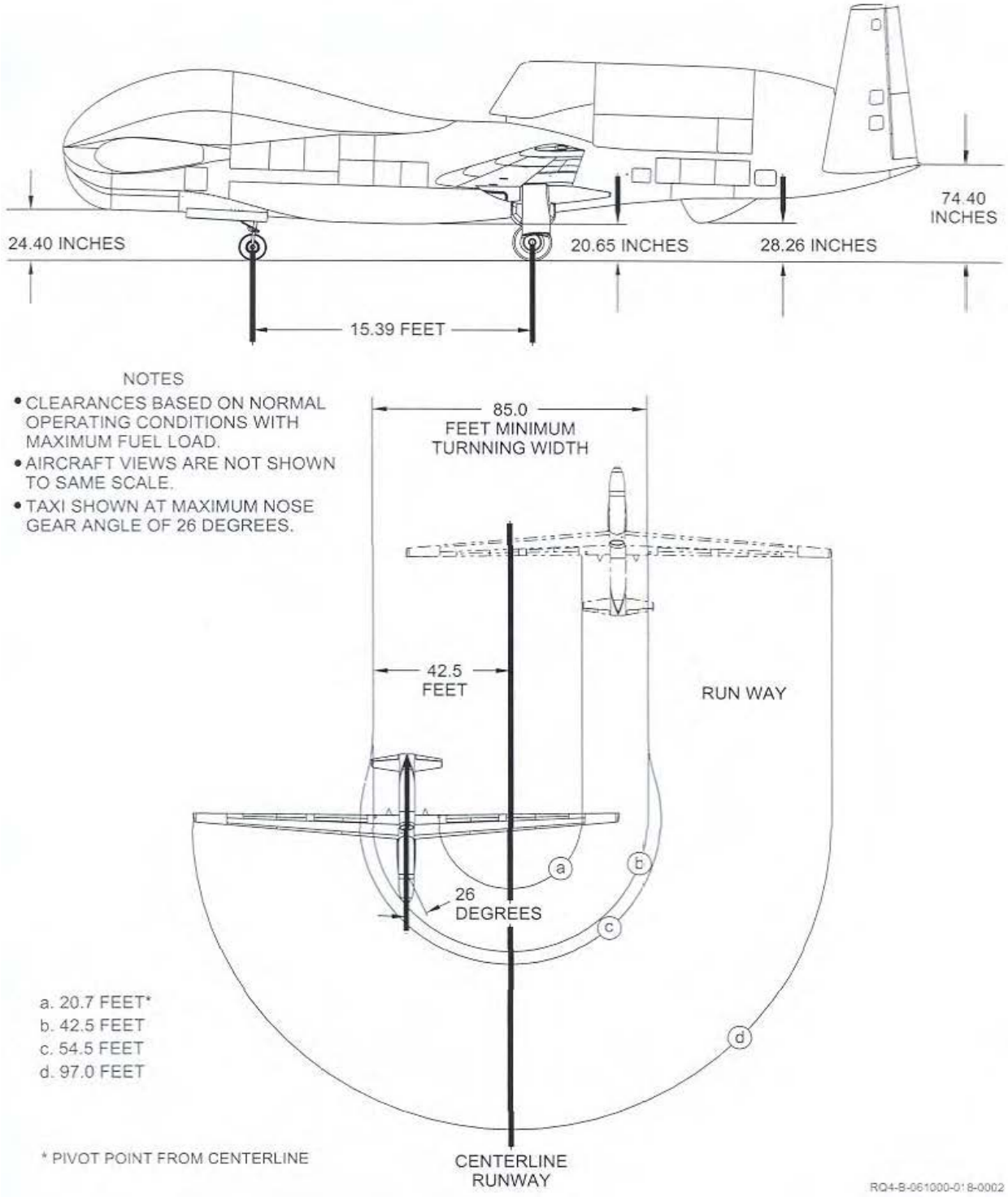

Figure A-5. Dimensions of MQ-9A Reaper

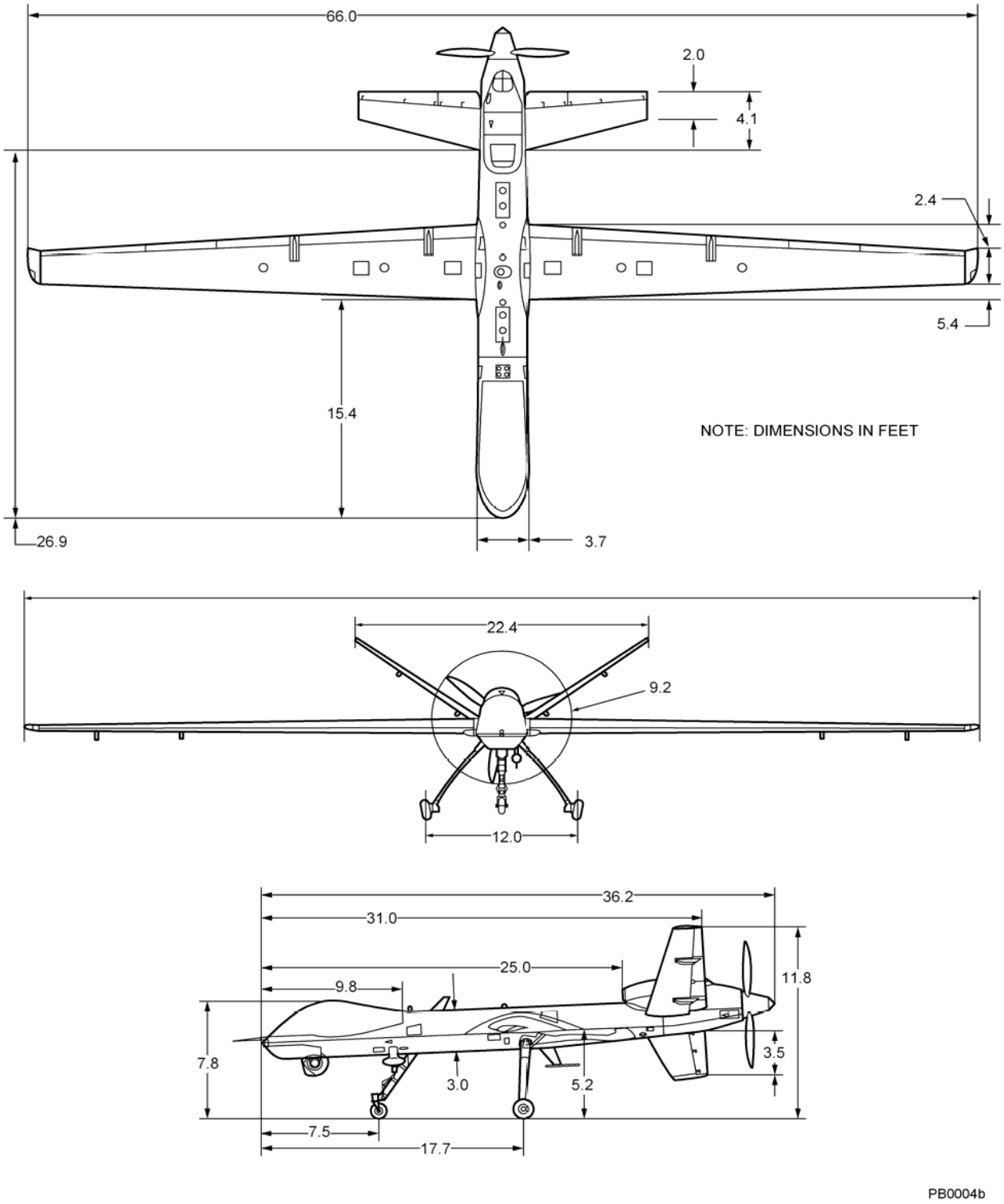

Figure A-6 MQ-9 Turning Radii

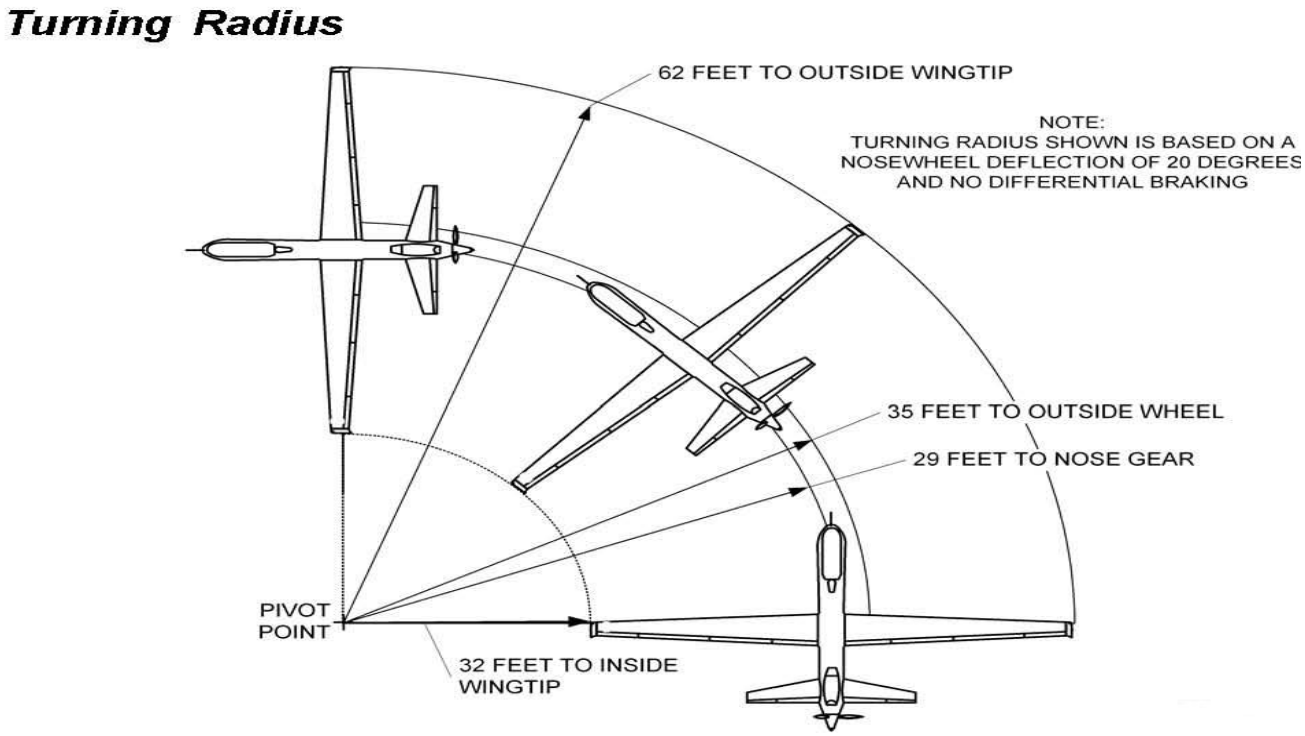

Figure A-7. Dimensions of MQ-1B Predator

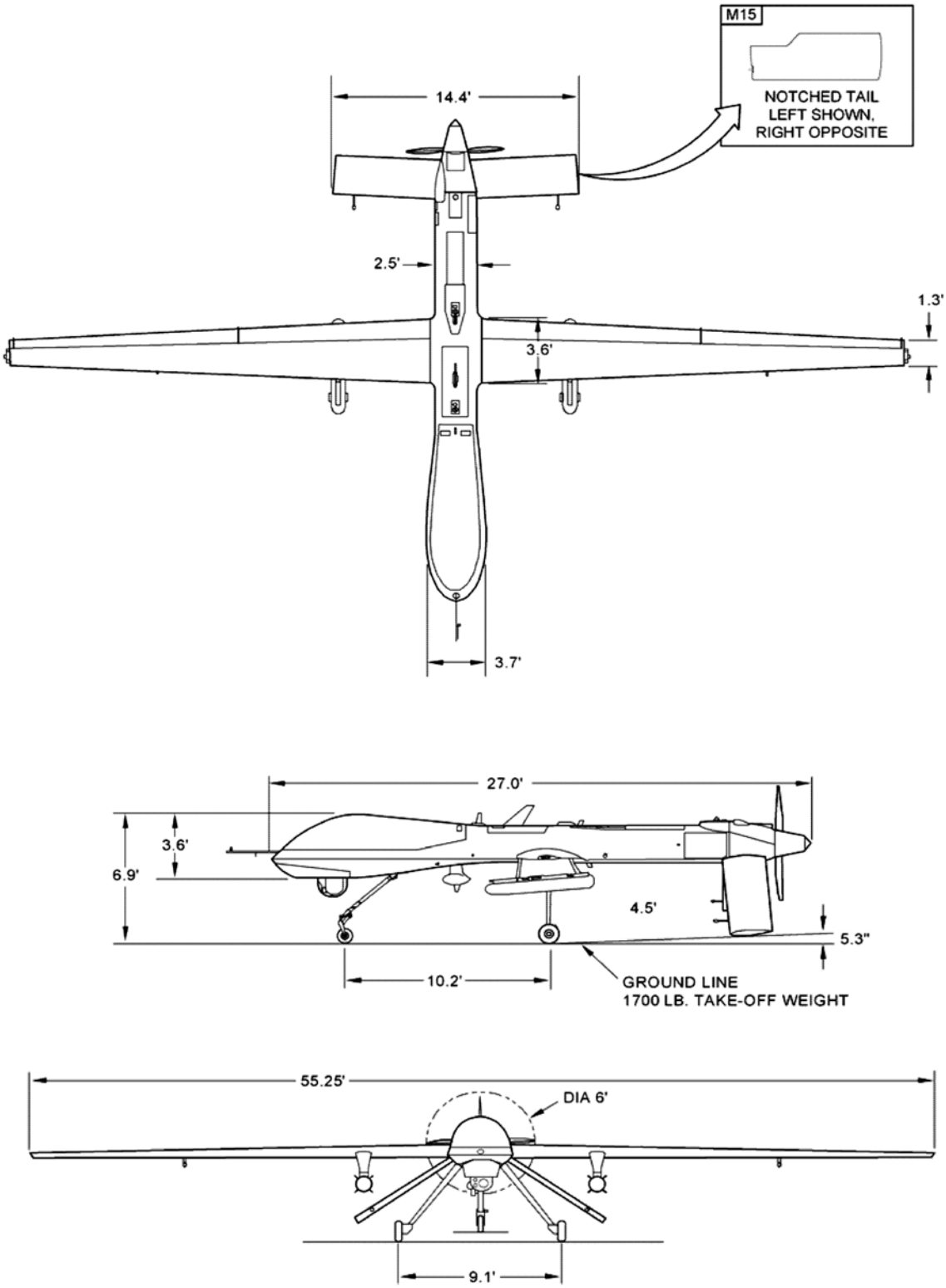

Figure A-8 MQ-1B Turning Radii

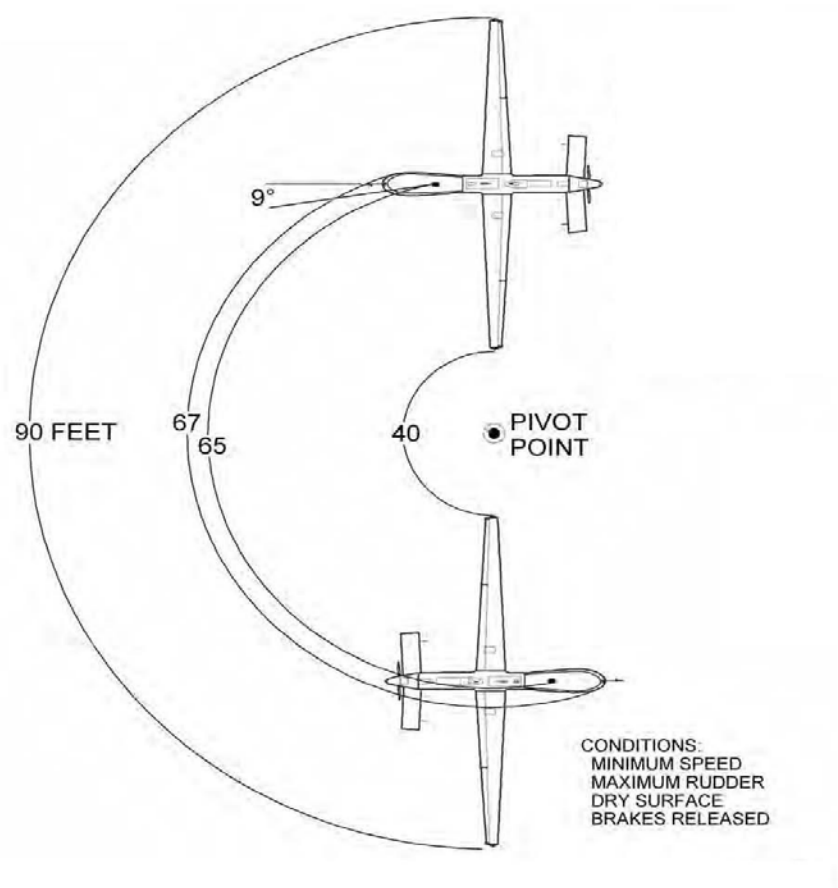

Figure A-9 MQ-1C Gray Eagle

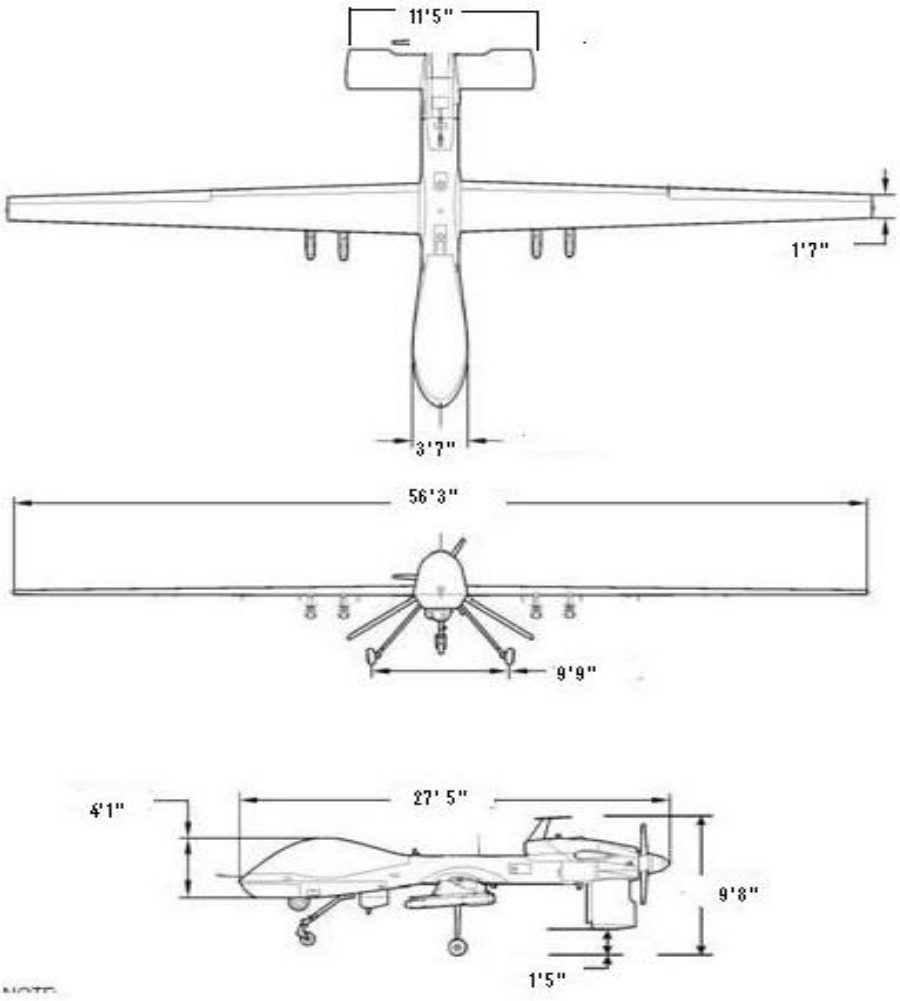

Figure A-10 Gray Eagle Turning Radius

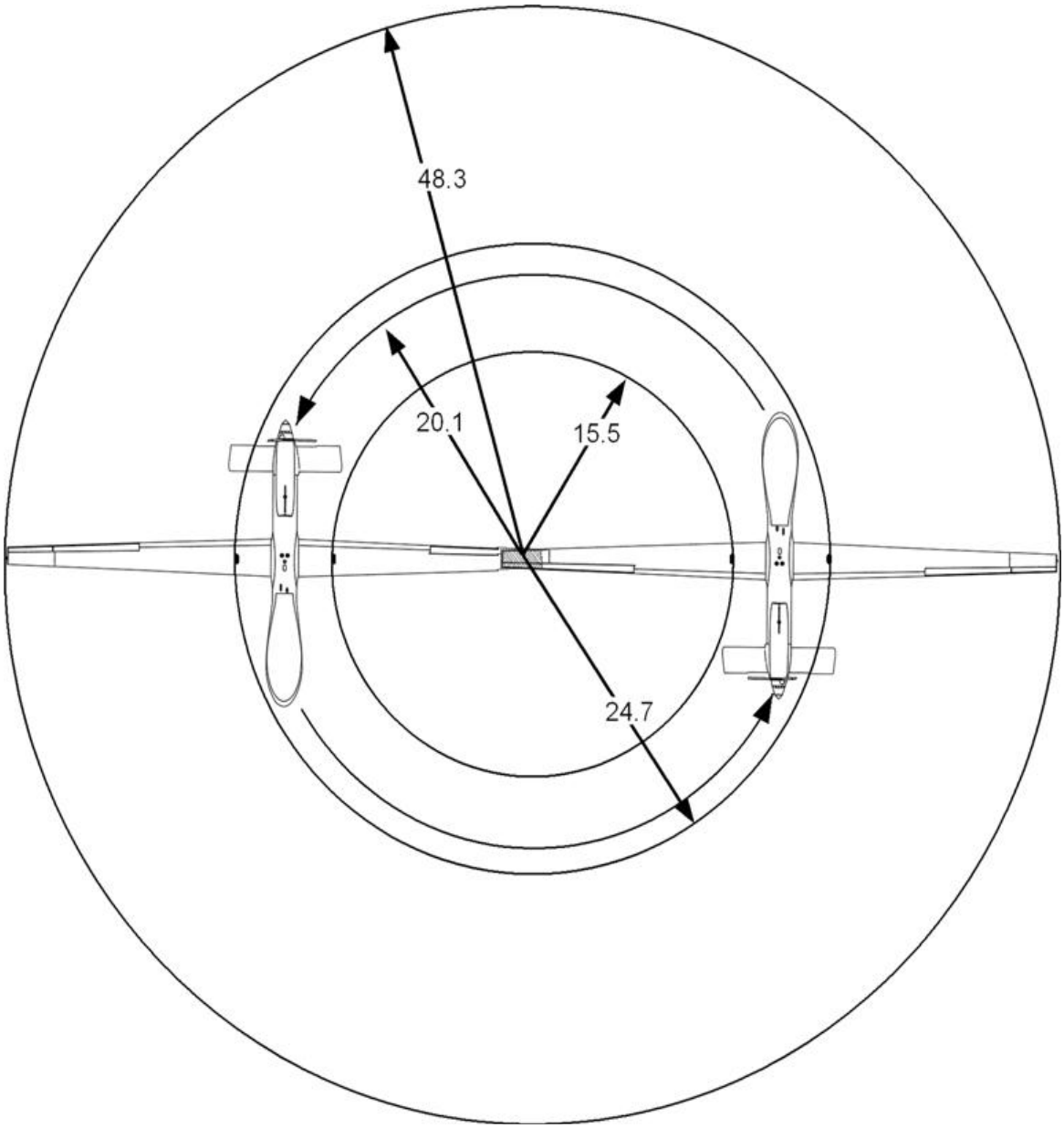

Figure A-11 RQ-7 A/B Shadow

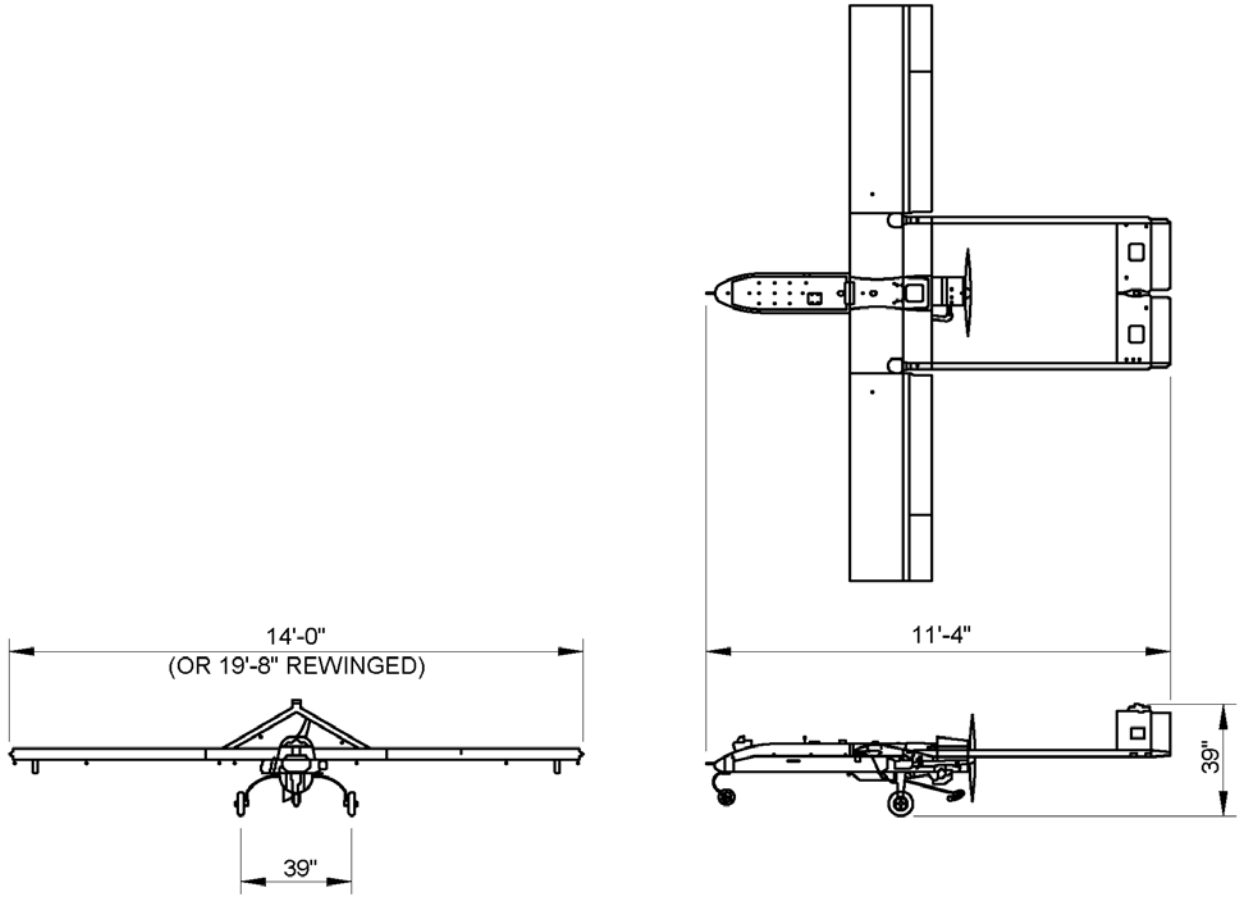

Figure A-12 MQ-5B Hunter

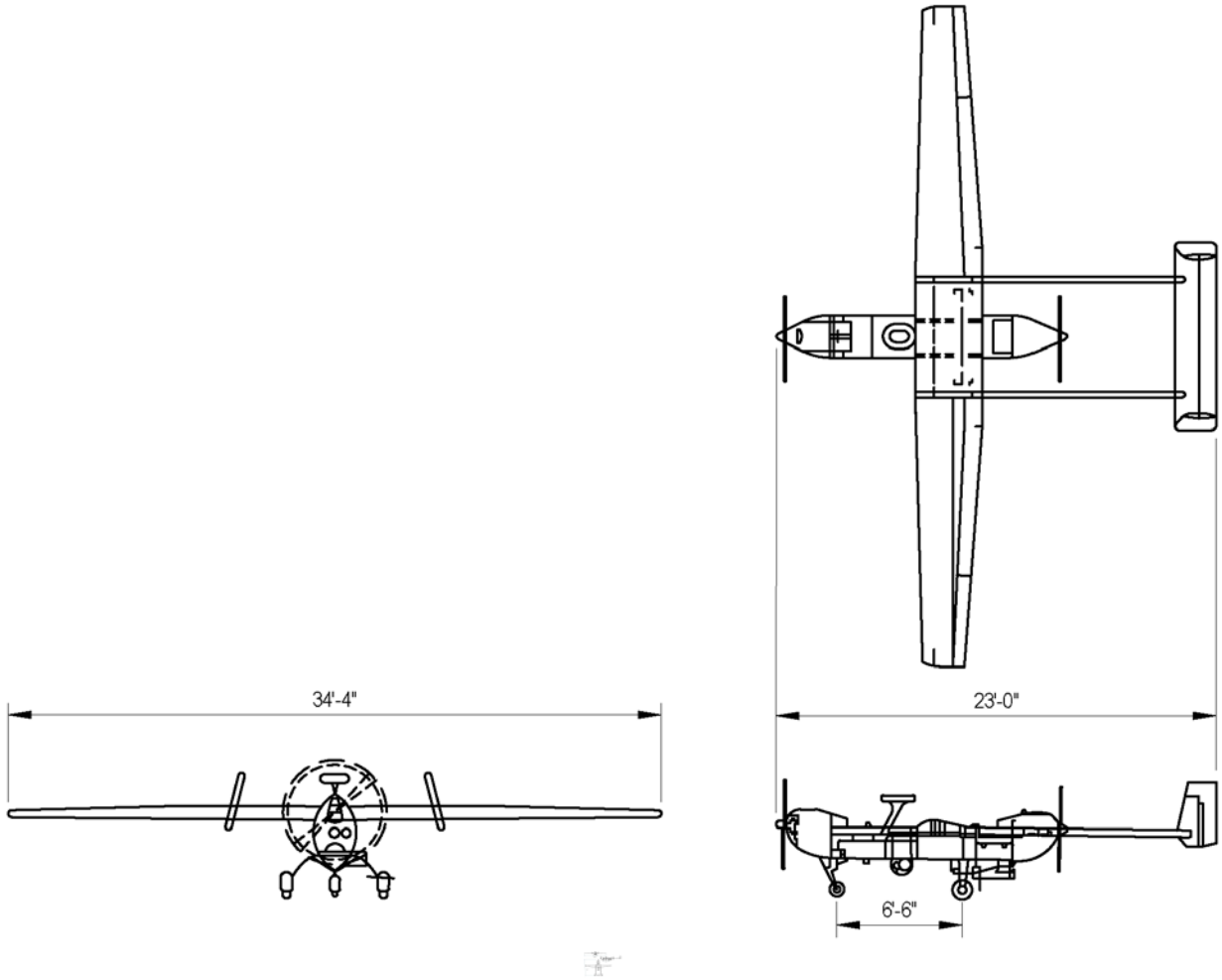

A-5. Land Use and Airspace Approval. When a new runway or modification is planned in addition to local permitting requirements, file Federal Aviation Administration (FAA) Form 7480-1 in accordance with FAA Order 7400.2 at least 90 days prior. FAA Form 7460-1 must be submitted to the FAA at least 45 days prior to the start of construction, in accordance with Federal Aviation Regulations (FAR), Part 77, Subpart B. Airspace surface penetrations will be noted. Army, Army National Guard (ARNG), and Army Reserves process the form in accordance with Army Regulation (AR) 95-2, USAF/USN process in accordance with appropriate service directives. For DoD facilities overseas similar requirements by the host country, North Atlantic Treaty Organization (NATO), or International Civil Aviation Organization (ICAO) may be applicable.

a. Land Use Studies. Long range land use planning is a primary strategy for protecting a facility from problems that arise from aviation generated noise and incompatible land uses.

Aircraft noise can adversely affect the quality of the human environment. Federal agencies are required to work with local, regional, state, and other federal agencies to foster compatible land uses, both on and off the boundaries of the aviation facility. The Air Installation Compatible Use Zone (AICUZ) and Installation Compatible Use Zone (ICUZ) programs promote land use compatibility through active land use planning.

b. Environmental Studies. Development of an aviation facility, including expansion of an existing aviation facility, changes in airspace/flight pattern requires compliance with a variety of laws, regulations, and policies. The National Environmental Policy Act (NEPA) requires all federal agencies to consider the potential environmental impacts of certain proposed projects and activities, as directed by DoD Directive (DoDD) 6050.1 and 6050.7. Implementation of these regulations is defined in these document service directives; Title 32, Code of Federal Regulations (CFR), Part 989 (32 CFR 989). Four broad categories of environmental review for a proposed action exist. The decision to conduct one study or another depends on the type of project and the potential consequences of the project to various environmental categories. Criteria for determining which type of study should be undertaken are defined in environmental directives and regulations. Environmental studies should be prepared and reviewed locally. When additional assistance or guidance is necessary, this support may be obtained through various agencies such as the Department of Army Representative/AF Rep/NAV Rep to the FAA, the US Army Corps of Engineers Transportation Systems Center (USACE TSC) /Air Force Civil Engineering Support Agency (AFCESA), Naval Facilities (NAVFAC) and the US Army Corps of Engineers District Offices.

(1) Environmental Assessment (EA). The EA serves to analyze and document the extent of the environmental consequences of a proposed action. It evaluates issues such as existing and future noise, land use, water quality, air quality, and cultural and natural resources. The conclusion of the assessment will result in either a Finding of No Significant Impact (FONSI), or, if the consequences are significant and cannot be mitigated to insignificance, the decision to conduct an Environmental Impact Statement (EIS). This decision is typically made by the authority approving the study.

(2) Environmental Impact Statement (EIS). An EIS is the document that identifies the type and extent of environmental consequences created if the proposed project is undertaken. The primary purpose of the EIS is to ensure that NEPA policies and goals are incorporated into the actions of the Federal government. The EIS defines the impact, the details and what measures will be taken to minimize, offset, mitigate, or avoid any adverse effects on the existing environmental condition. Upon completion of an EIS, the decision maker will file a Record of Decision (ROD), which finalizes the environmental investigation and establishes consent to either abandon or complete the project within the scope of measures outlined in the EIS.

(3) Categorical Exclusion (CATEX). A CATEX is defined as a category of proposed action(s) that do not individually or cumulatively have the potential for significant effect on the environment and do not, therefore, require further environmental analysis in an EA or EIS. A

list of actions that are categorically excluded are contained in the regulatory directives for each service.

(4) Exemption By-Law and Emergencies. In specific situations, Congress may exempt the DoD from compliance with NEPA for particular actions. Emergency situations do not exempt the DoD from complying with NEPA but do allow emergency response while complying with NEPA.

c. Aircraft Noise Studies. Air Installation Compatibility Use Zone (AICUZ) and Installation Compatibility Use Zone (ICUZ) are programs initiated to implement Federal laws concerning land compatibility from the perspective of environmental noise impacts. Studies under these programs establish noise abatement measures that help to eliminate or reduce the intensity of noise from its sources, and provide land use management measures for areas near the noise source.

(1) Noise Contour Maps. Noise levels generated from the activities of fixed- and rotary wing operations are identified using contours that delineate areas of equal sound pressure impact on the areas surrounding the source of the noise. Noise levels are expressed in day/night average noise level (Dnl), (db) over a 24 hour period) and noise contours provide a quantified diagram of the noise levels. Noise contours are illustrated on airfield general site plans, installation land use compatibility plans. Noise contours from other sources, such as firing ranges, should also be shown on noise contour maps. In addition, noise contour maps should show the imaginary airspace, such as the runway primary surface, clear zone, accident potential zone (APZ) I, and APZ II. Establishing noise contour maps identifies potential noise sensitive areas on and off the aviation facility.

(2) Requirement for Analysis of Noise Impact. An EIAP is required to analyze a noise impact. An EA is required when: (1) a project or facility is proposed within a noise-sensitive area; (2) there is a change in flight operational procedures; or (3) the quality of the human environment is significantly affected by a change in aircraft noise.

A-6. Runway.

a. Runway Location. Runway location and orientation are paramount to airport safety, efficiency, economics, practicality, and environmental impact. The degree of concern given to each factor influencing runway location depends greatly on meteorological conditions, adjacent land use and land availability, airspace availability, runway type, environmental factors, terrain features/topography, and obstructions to air navigation.

b. Obstructions to Air Navigation. The runway must have approaches that are free and clear of obstructions. Runways must be planned so that the ultimate development of the airport provides unobstructed navigation. A survey of obstructions will be undertaken to identify those objects that may affect aircraft operations. Protection of airspace may be accomplished through purchase, easement, zoning coordination, and application of appropriate service directives.

c. Runway Orientation. Wind direction and velocity is a major consideration for siting runways. With respect to UAS operations, prevailing winds and velocities may actually prevent operations if the runway cannot be aligned with them. To be functional, efficient, and safe, the runway should be oriented in alignment with the prevailing winds, to the greatest extent practical, to provide favorable wind coverage. Wind data, obtained from local sources, for a period of not less than five years, should be used as a basis for developing the wind rose to be shown on the airfield general site plan. UFC 3-260-1, Appendix B, Section 4, provides guidance for the research, assessment, and application of wind data.

A-7. Airfield Dimensional Criteria.

a. The dimensions for airfield facilities, airfield lateral safety clearances, and airspace imaginary surfaces are provided in this document.

b. Airfields/Heliports, Air Force Bases, Naval Air Stations and Marine Corps Air Stations used by both manned and unmanned aircraft (dual use facilities) will use the geometric criteria contained in UFC 3-260-01 in conjunction with this ETL. The most critical criteria will apply based on the segment use, it may even be a combination of both documents, i.e. the taxiway to the UAS apron will be designed based on this ETL. The RQ-4 Global Hawk requires a Class B runway. New pavements for UAS aircraft at manned aircraft facilities shall be designed in accordance with the requirements in UFC 3-260-02. Chapter 1 of UFC 3-260-02 details which pavements must be rigid pavements and which pavements can be either rigid or flexible pavements. The traffic mix utilized for the installation shall be used for these new UAS pavements (installation traffic mixes are spelled out in UFC 3-260-02 Chapter 2 for Army Class I, II, III, IV and in Chapter 3 for USAF medium, light, heavy, etc).

c. Permissible Deviations From Design Criteria. This paragraph provides siting information for UAS support facilities that do not conform to the airfield clearance and airspace surface criteria elsewhere in this ETL. The MQ-1C/MQ-5 Tactical Automated Landing System (TALS) and supporting equipment shall be sited at a maximum distance from the runway centerline allowed by operational requirements but not less 250 feet. When the TALS is required to be sited within 250 feet it must meet frangibility requirements and have an approved waiver IAW UFC 3-260-01, Appendix B, Section 1. All other supporting equipment shall be sited not less than 250 ft from the runway centerline. Under no conditions will the TALS be sited closer than 150 feet from the runway centerline. If line-of-sight is the basis of the waiver request then the waiver request will have a line of sight analysis justifying the operational distance from the runway centerline. Additionally, if the Tactical Automated Landing System – Tracking System (TALS-TS) will be required to remain in service for more than 30 days, the equipment should be installed on a small concrete foundation. No part of the TALS-TS foundation and any remaining structure attached to it will extend three inches or more above grade after the frangible connections fail. For frangibility requirements see Appendix D.

d. UAS runway co-located with an active Army Airfield, Army Heliport or Air Force Base runway.

(1) Table A-7 lists the separation criteria between manned and unmanned runways. If the UAS facility is planned for dual use, the requirements of UFC 3-260-1, UFC 3-535-01 and appropriate service marking directives apply. If runways are noncompliant with the separation distance requirements in Table A-7, one of the runways shall be closed while the other is operational.

(2) New pavements for UAS aircraft at these facilities shall be designed in accordance with the requirements in UFC 3-260-02. Chapter 1 of UFC 3-260-02 details which pavements must be rigid pavements and which pavements can be either rigid or flexible pavements. The traffic mix used for UAS only pavements shall be, as a minimum, the same as the traffic used for an Army Class I Helipad (20,000 passes of a 16,300lb UH-60 Aircraft). Other UAS only pavements may also use this Class I traffic mix if approved by the Transportation Systems Center (TSC) for the U.S. Army or the MAJCOM Pavement Engineer for the U.S. Air Force/AFCESA. If other support vehicles that will utilize these areas require a thicker pavement design (i.e. crash fire trucks, support trucks, forklifts, etc.), then the thickness design required for those vehicles shall govern.

Table A-7

Separation Distance Between Runways	
Min. 700 ft	Non-simultaneous Visual Flight Rules (VFR) operations.
Min. 1000 ft	Simultaneous VFR operations
Min. 2500 ft	Instrument Flight Rules (IFR)/VFR using simultaneous operations (depart-depart) (depart-approach).

e. UAS only facilities:

(1) This section presents design considerations for UAS only facilities . These criteria are provided as a supplement to the criteria given in UFC 3-260-01, *Airfield and Heliport Planning and Design.*

(2) New pavements for UAS aircraft at these facilities shall be designed in accordance with the requirements in UFC 3-260-02. Chapter 1 of UFC 3-260-02 details which pavements must be rigid pavements and which pavements can be either rigid or flexible pavements. The traffic mix used for UAS only pavements shall be, as a minimum, the same as the traffic used for an Army Class I Helipad (20,000 passes of a 16,300lb UH-60 Aircraft). Other UAS only pavements may also use this Class I traffic mix if approved by the Transportation Systems Center (TSC) for the U.S. Army or the MAJCOM Pavement Engineer for the U.S. Air Force/AFCESA. If other support vehicles that will utilize these areas require a thicker pavement design (i.e. crash fire trucks, support trucks, forklifts, etc.), then the thickness design required for those vehicles shall govern.

(3) Runway Designation. The UAS only runway will be designated with a "UAS" on each end of the runway as shown in Figure A- 28. Shadow runways will only be marked with a "UAS", without a designation number and centerline marking. Global Hawk, Predator, Reaper and Gray Eagle UAS will be marked in accordance with paragraph A-12. These runways are not structurally built to support standard fixed wing or rotary aircraft operations.

Table A-8

UAS Runway						
	Item	Criteria				Remarks
No.	Description	MQ-1	RQ-7A/B	MQ-5	MQ-9	
1	Length (min)	5000'	800'	2500'	7500'	MQ-1C 4500', at 9000' elevation runway length is 5500'. For USAF required length shall be determine by the A2, but not less than stated except for lengths in Appendix B.
2	Width	75'	50'	50'	75'	MQ-1C 100'
3	Width of shoulders	10'	5'	10'	10'	Shoulder may be paved or unpaved.
4	Longitudinal grades of runway and shoulders	Grades may be both positive and negative but must not exceed the limit specified in UFC 3-260-1. Shadow can operate on a max grade of 1.7%. Grade restrictions are exclusive of other pavements and shoulders. Where other pavements tie into runways, comply with grading requirements for tow ways, taxiways, or aprons as applicable, but hold grade changes to the minimum practicable to facilitate drainage.				
5	Longitudinal runway grade changes	No grade change is to occur less than 1,000 ft from the runway end	No grade change is to occur less than 100 ft from the runway end	No grade change is to occur less than 300 ft from the runway end	No grade change is to occur less than 1,000 ft from the runway end	Where economically feasible, the runway will have a constant centerline gradient from end to end. Where terrain dictates the need for centerline grade changes, the distance between two successive points of intersection (PI) will be not less than 1,000 ft (MQ-1 and

UAS Runway						
	Item	Criteria				Remarks
No.	Description	MQ-1	RQ-7A/B	MQ-5	MQ-9	
						MQ-9),100 ft (RQ-7A/B) and 300 ft (MQ-5B) and two successive distances between PIs will not be the same.
6	Rate of longitudinal runway grade changes	Maximum rate of longitudinal grade change is produced by vertical curves having 180-m (600-ft) lengths for each percent of algebraic difference between the two grades.				
7	Longitudinal sight distance	Any two points 8 ft above the pavement must be mutually visible (visible by each other) for 5000 ft. Proportionally reduce height above runway for runways shorter than 5,000 ft.				
8	Transverse grade of runway	Runway pavements will be centerline crowned. Slope pavement downwards from centerline of runway. 1.5 percent slope is optimum transverse grade of runway.				
9	Transverse grade of paved shoulder	Slope downward from runway pavement. Reversals are not allowed.				
10	Runway lateral clearance zone width (from centerline)	250’	60’	250’	250’	The runway lateral clearance limits coincide with the limits of the primary surface. The ends of the lateral clearance zone coincide with the runway ends plus overruns. The ground surface within this area must be clear of fixed or mobile objects, and graded to the requirements of UFC 3-260-1, Table 3-2, items 13 and 14. The zone width is measured perpendicularly from the centerline of the runway and begins at the runway

UAS Runway						
	Item	Criteria				Remarks
No.	Description	MQ-1	RQ-7A/B	MQ-5	MQ-9	
						centerline. (1) Fixed obstacles include man-made or natural features such as buildings, trees, rocks, terrain irregularities and any other features constituting possible hazards to moving aircraft. (2) Mobile obstacles include parked aircraft, parked and moving vehicles, railroad cars, and similar equipment. Taxiing aircraft, emergency vehicles, and authorized maintenance vehicles are exempt. (3) Parallel taxiway (exclusive of shoulder width) will be located in excess of the lateral clearance distances (primary surface). (4) Above ground drainage structures, including head wall, are not permitted within 150’(60’ for RQ-7A/B)of the runway centerline.
11	Longitudinal grades within runway lateral clearance zone	Exclusive of pavement, shoulders, and cover over drainage structures. Slopes are to be as gradual as practicable. Avoid abrupt changes or sudden reversals. Rough grade to the extent necessary to minimize damage to aircraft.				

UAS Runway						
	Item	Criteria				Remarks
No.	Description	MQ-1	RQ-7A/B	MQ-5	MQ-9	
12	Transverse grades within runway lateral clearance zone (in direction of surface drainage)	Exclusive of pavement, shoulders, and cover over drainage structures. Slopes are to be as gradual as practicable. Avoid abrupt changes or sudden reversals. Rough grade to the extent necessary to minimize damage to aircraft.				
13	Width of mandatory frangibility zone (MFZ) (ft)	300	NA*	300*	300	Centered on the runway centerline. All items sited within this area must be frangible (see UFC 3-260-01 Appendix B, Section 13).
14	Length of MFZ	Extends the entire length of the runway plus clearzone. Items that must be sited there due to their function must be made frangible to the maximum extent possible (see UFC 3-260-1, Appendix B, Section 13).*				

***** For the RQ-7A/B /MQ-5 runways no objects except for the arresting system and barrier net may be placed within the primary surface.

Figure A-13 MQ-1/9 Predator/Gray Eagle/Reaper

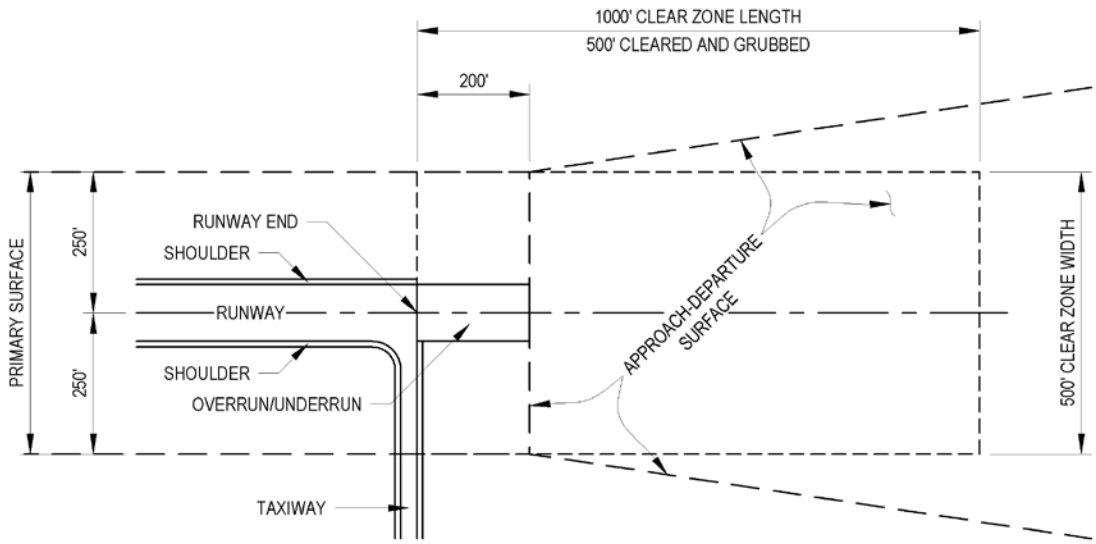

Figure A-14 RQ-7A/B Shadow

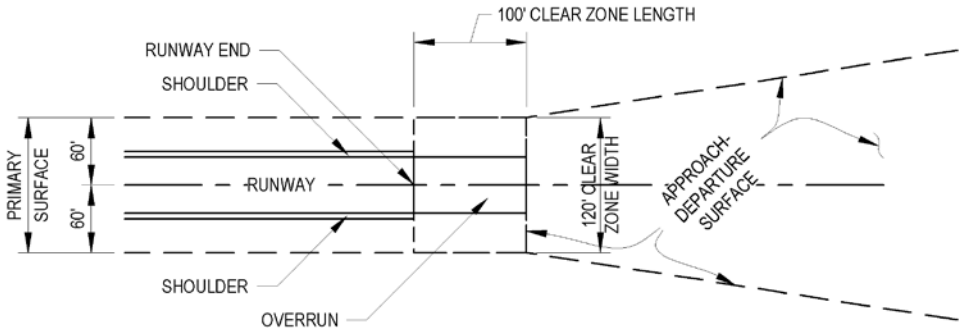

Figure A-15 MQ-5 Hunter

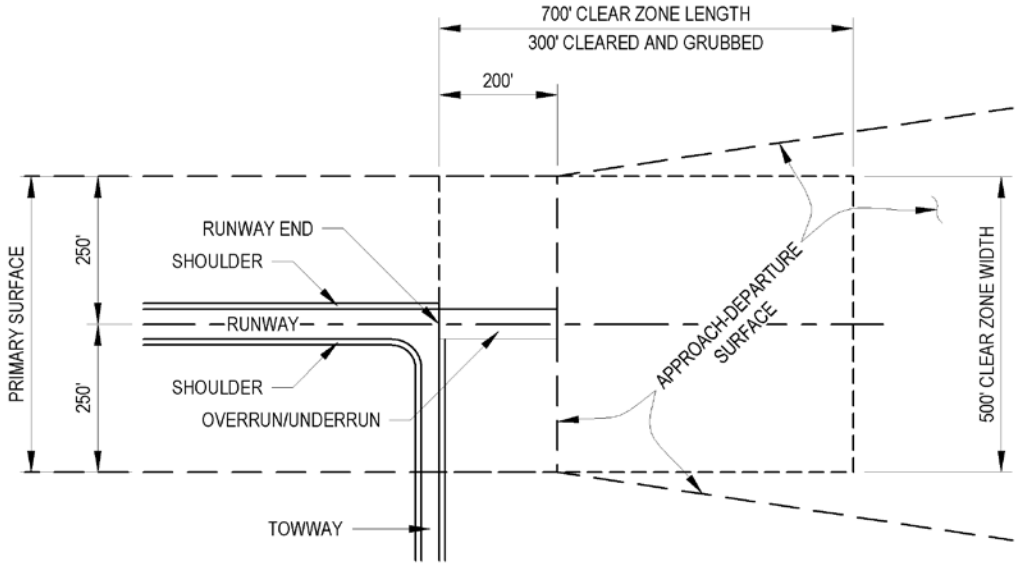

Figure A-16 MQ-1/9 Predator/Gray Eagle/Reaper

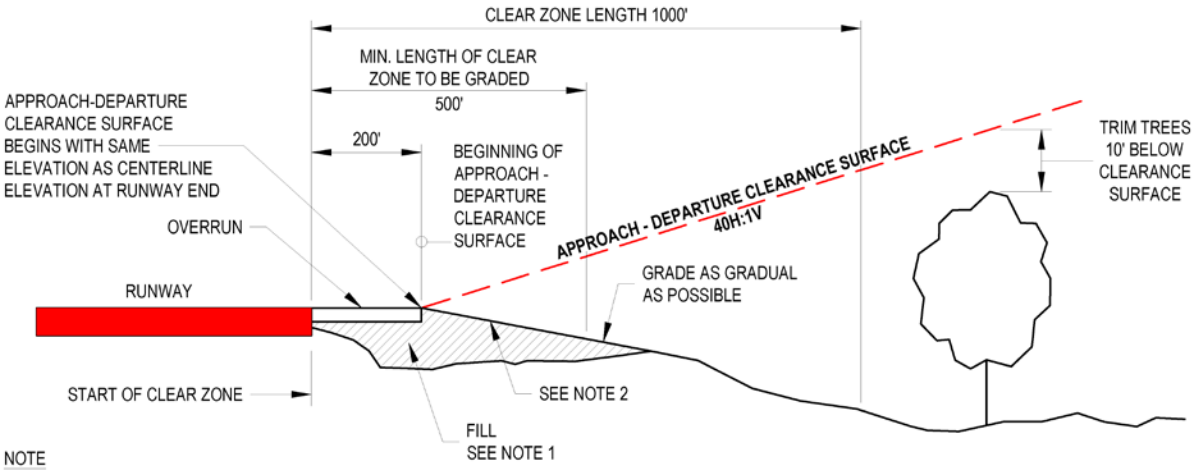

NOTE
1. WHERE EXISTING GROUND IS ABOVE THE APPROACH-DEPARTURE SURFACE, CUT WILL BE REQUIRED. WHERE THE EXISTING GROUND IS BELOW APPROACH-DEPARTURE SURFACE, FILL AS NECESSARY TO MEET GRADE REQUIREMENTS
2. FOLLOW CLEAR ZONE GRADING REQUIREMENTS.

OVERRUN FILL PROFILE

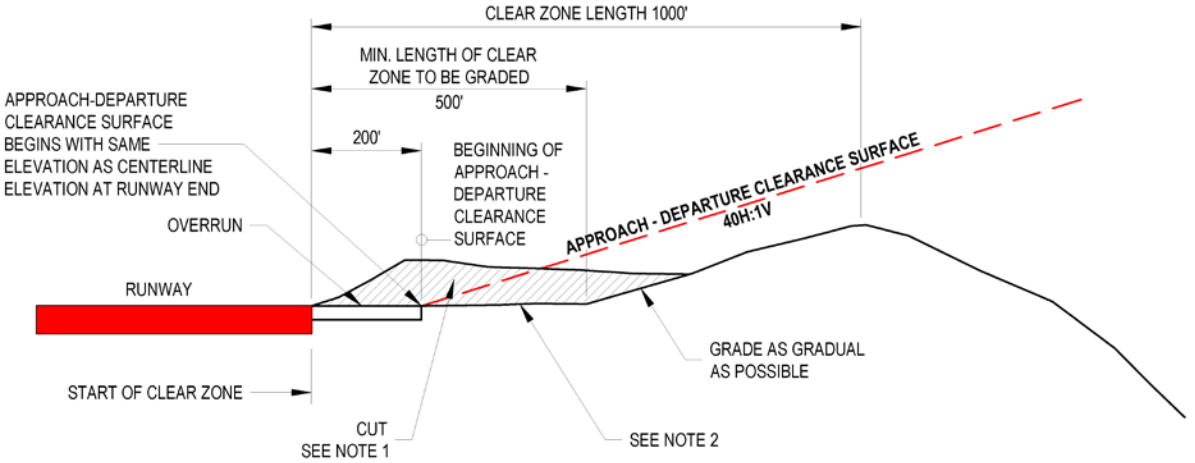

OVERRUN CUT PROFILE

Figure A-17 RQ-7A/B Shadow

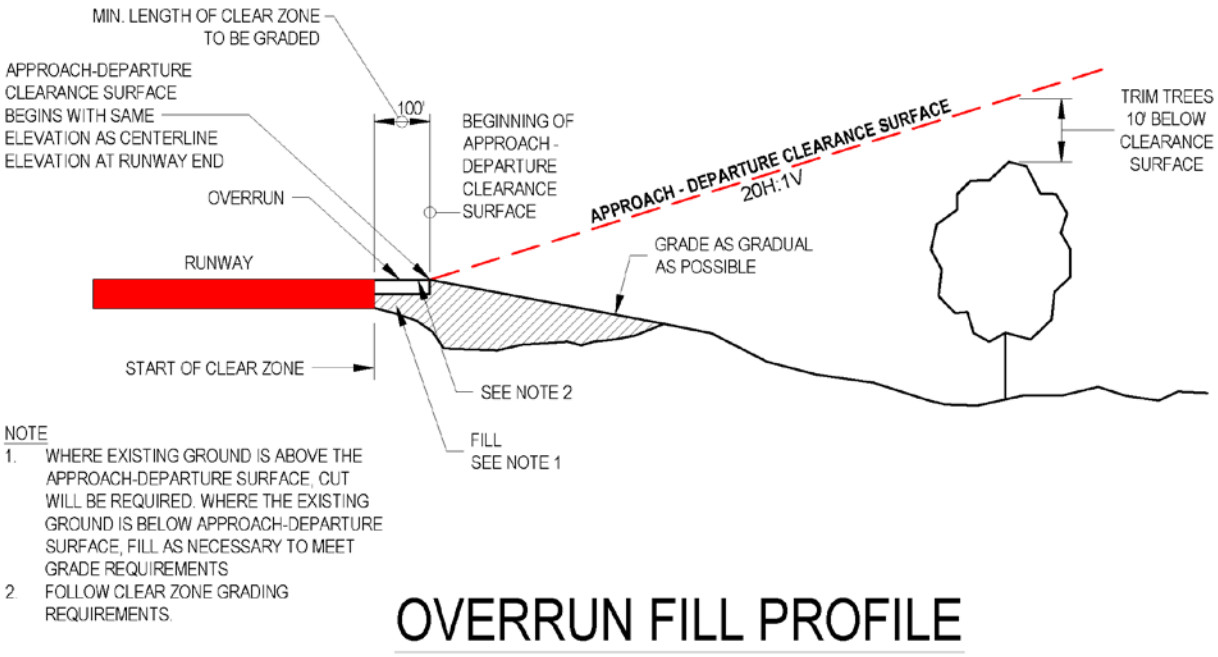

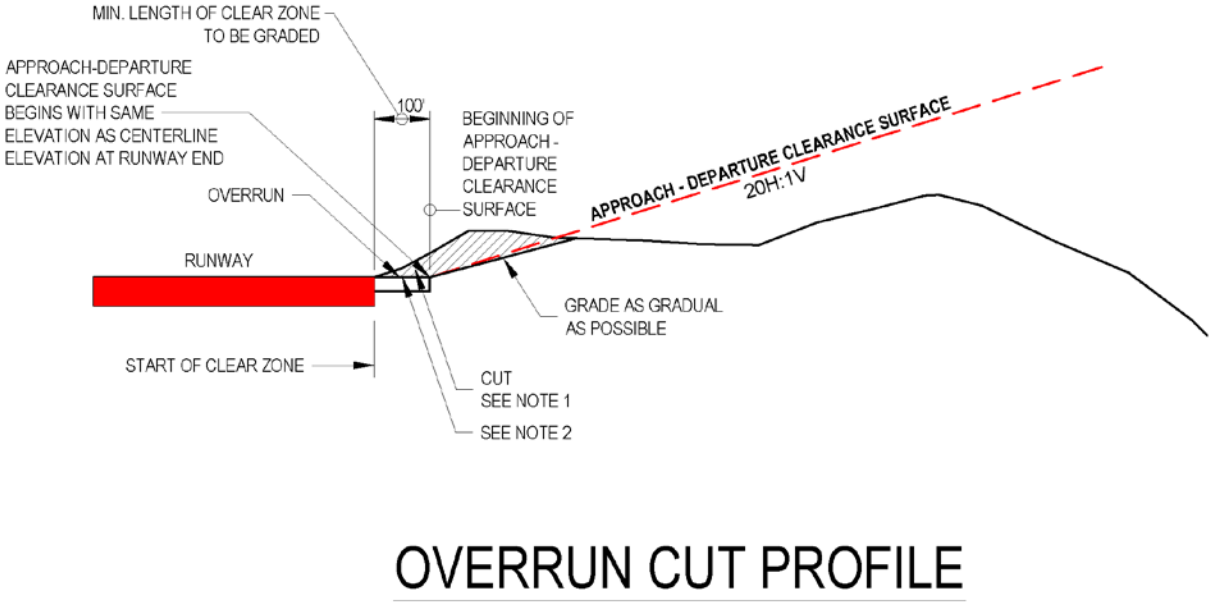

Figure A-18 MQ-5 Hunter

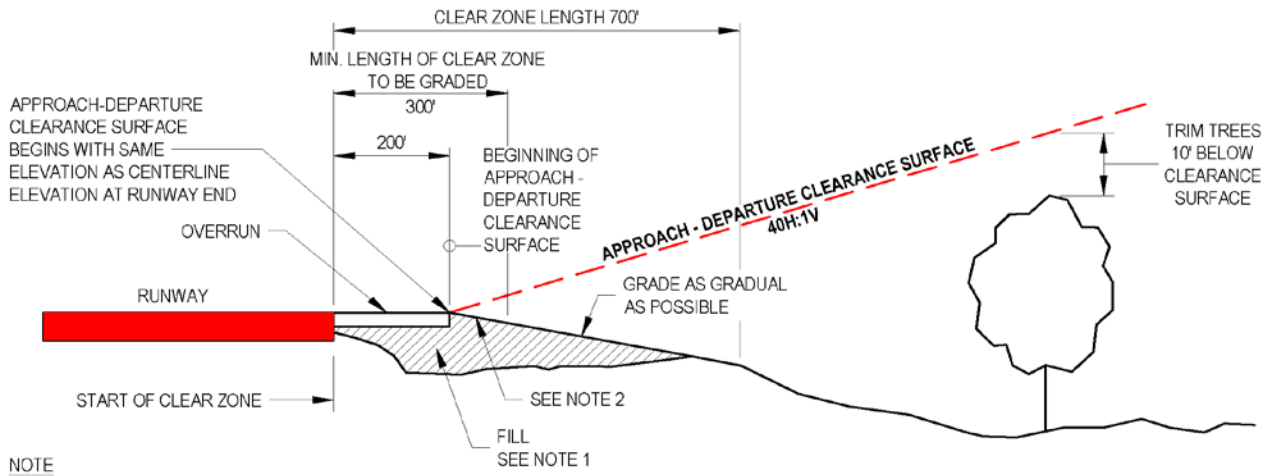

NOTE
1. WHERE EXISTING GROUND IS ABOVE THE APPROACH-DEPARTURE SURFACE, CUT WILL BE REQUIRED. WHERE THE EXISTING GROUND IS BELOW APPROACH-DEPARTURE SURFACE, FILL AS NECESSARY TO MEET GRADE REQUIREMENTS
2. FOLLOW CLEAR ZONE GRADING REQUIREMENTS.

OVERRUN FILL PROFILE

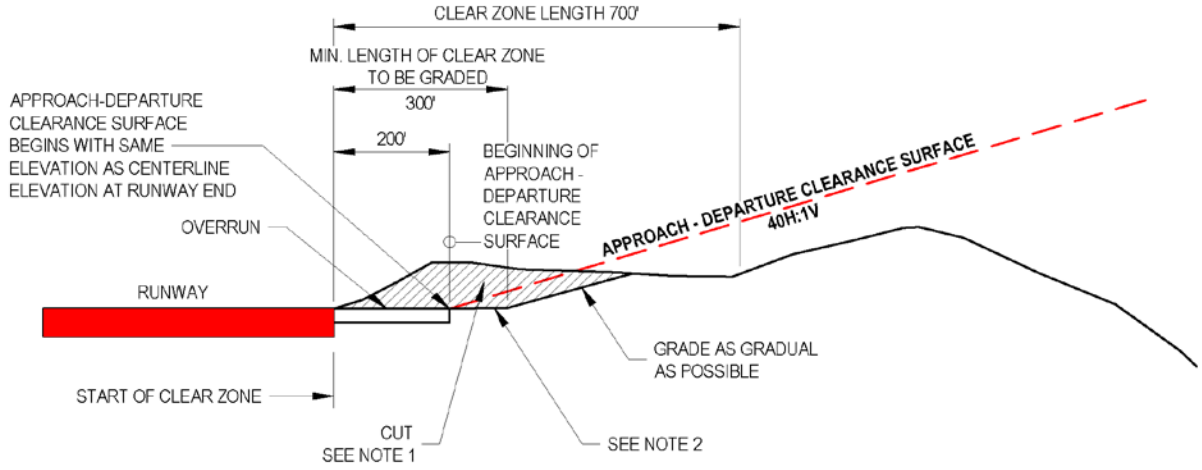

OVERRUN CUT PROFILE

Figure A-19 MQ-1/5/9

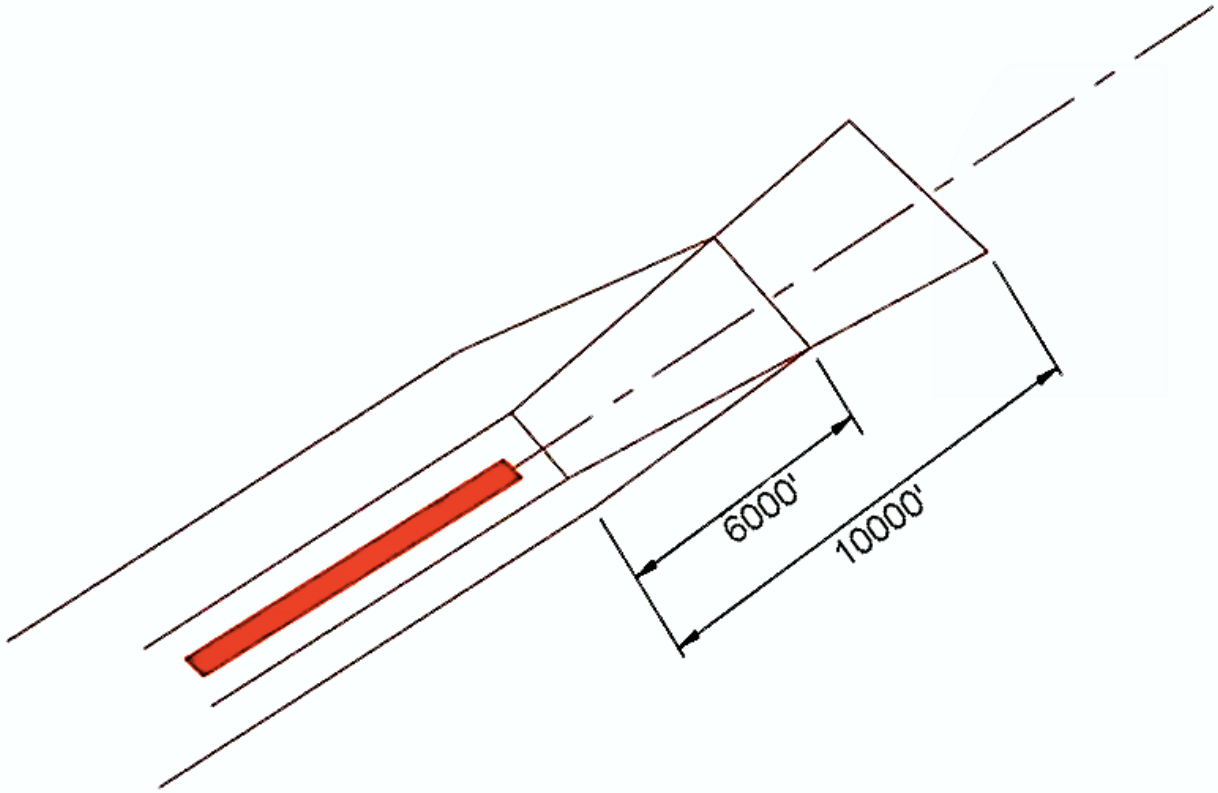

LEGEND

A PRIMARY SURFACE
B CLEAR ZONE SURFACE (NOT SHOWN)
C APPROACH-DEPARTURE CLEARANCE SURFACE (40H1V SLOPE RATIO)
D APPROACH-DAPARTURE CLEARANCE SURFACE (HORIZONTAL - NOT REQUIRED)
E INNER HORIZONTAL SURFACE (NOT REQUIRED)
F CONICAL SURFACE (NOT REQUIRED)
G OUTRER HORIZONTAL SURFACE (NOT REQUIRED)
H TRANSITIONAL SURFACE (4H:1V SLOPE RATIO)
I NOT USED

Figure A-20 MQ-1/5/9 & RQ-7A/B

f. Runway Overruns. Runway overruns keep the probability of serious damage to an aircraft to a minimum

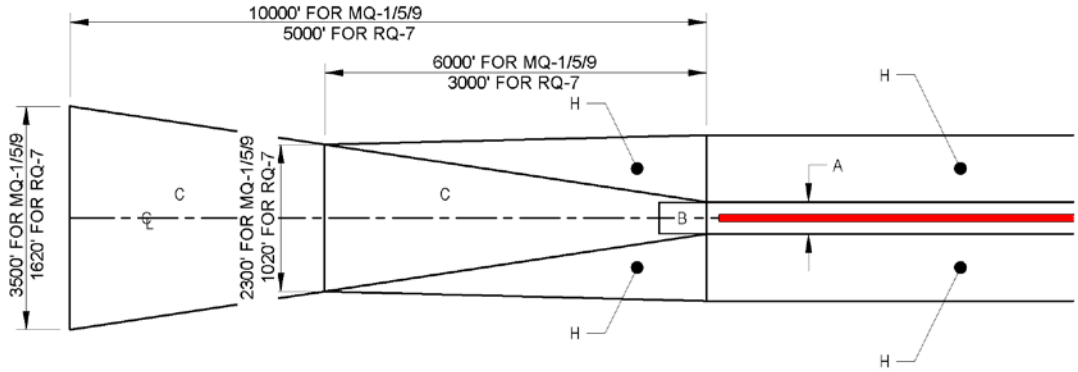

PLAN

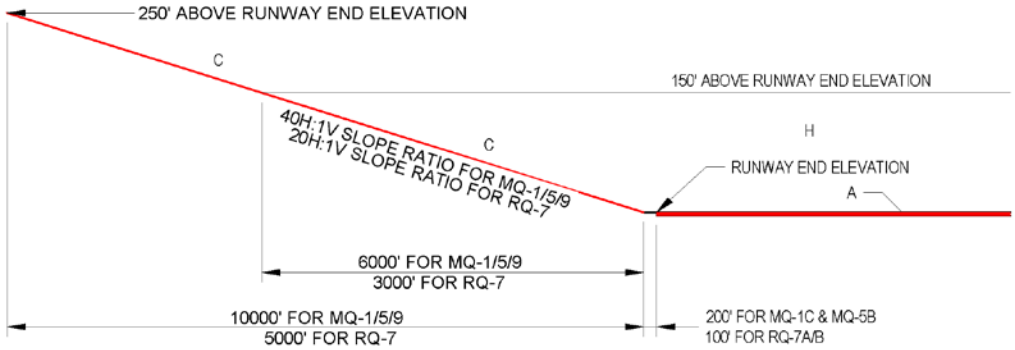

LONGITUDAL SECTION

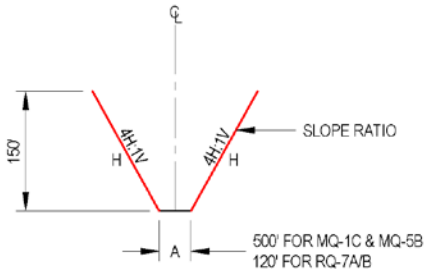

TRANSVERSE SECTION

LEGEND

A - PRIMARY SURFACE
B - CLEARZONE SURFACE
C - APPROACH/DEPARTURE CLEARANCE SURFACE (40H:1V FOR MQ-1/5/9 & 20H:1V FOR RQ-7)
H - TRANSITIONAL SURFACE (4H:1V SLOPE RATIO)

NOTES:

1. DATUM ELEVATION FOR SURFACE C IS THE RUNWAY CENTERLINE ELEVATION AT THE THRESHOLD. SURFACE H VARIES AT EACH POINT

Table A-9

Overruns						
Item		MQ-1	RQ-7A/B	MQ-5	MQ-9	Remarks
No.	Description	Requirement				
1	Length	200’	100’	200’	200’	
2	Paved Length	200’	Optional 100’	200’	200’	
3	Total width of overrun (paved and unpaved)	Sum of runway and shoulders				The outside edges of the overrun, equal in width to the runway shoulder, are graded but not paved.
4	Paved overrun width	Same as width of runway				Center on runway centerline extended.
5	Longitudinal centerline grade	Same as last 1,000’ of runway	Same as last 100’ of runway	Same as last 800’ of runway	Same as last 1,000’ of runway	To avoid abrupt changes in grade between the first 300 ft and remainder of overrun the maximum change of grade is 2.0 (1.7% for RQ-7A/B) percent per 100 linear ft.
6	Transverse grade	Min 2.0 percent Max 3.0 percent (1.7% max for RQ-7A/B) 1.5 in drop-off at edge of paved overrun +/- 0.5 in				From centerline of overrun. Transition from the runway and runway shoulder grades to the overrun grades to be made within the first 50ft of overrun.

g. Runway Clear zones. Runway clear zones are areas on the ground, located at the ends of each runway. They possess a high potential for accidents, and their use is restricted to be compatible with aircraft operations. Hence, they are treated as “exclusion zones” and not merely restricted access. Runway clear zones are required for the runway and should be owned or protected under a long-term lease.

(1) Treatment of Clear Zones. The clear zone consists of two distinctly different areas starting at the end of the runway, the graded area (for length of the graded area, see Table A-10, Item 4) and the land use control area. The graded area of the clear zone is prepared and

maintained as an aircraft safety area. Preparation of the graded area must comply with the criteria given in this document. The remainder of the clear zone is a land use control or exclusion area intended to protect people on the ground. (DoDI 4165.57 and UFC 3-260-1, Appendix B, Section 3).

(2) Clear Zone Mandatory Frangibility Zone (MFZ). The MFZ extends through the graded area. Items that must be sited there due to their function must be made frangible to the maximum extent possible (UFC 3-260-1, Appendix B, Section 13).

(3) Prohibited Land Uses. Criteria prohibits certain land uses within the clear zone and APZs (APZ I and APZ II). These land uses include storage and handling of munitions and hazardous materials, and live fire weapons ranges (See DoDI 4165.57 and DA Pam 385-63 for more information on compatible land use).

Table A-10

Clear Zones						
Item		MQ-1	RQ-7A/B	MQ-5	MQ-9	Remarks
No.	Description	Requirement				
1	Length (ft)	1000	100	700	1000	Measured along the extended runway centerline beginning at the runway end. For grading requirements, see items 4 and 5.
2	Width at start of clear zone (adjacent to the runway) (ft)	500	120	500	500	Centered on the runway center line extended.
3	Length of Graded Clear zone surface (graded area) (ft)	500	100	300	500	Graded area only. For land use outside the graded area of the clear zone, apply AICUZ standards.
4	Width at end of clear zone (ft)	500	120	500	500	Centered on the runway center line extended.

5	Longitudinal grade of area to be graded	Max 10.0 percent	Max 1.7 percent	Max 7.0 percent	Max 10.0 percent	The area to be graded is 500 ft (RQ/MQ-1, MQ-9), 300 ft (MQ-5B) and 100 ft (RQ-7A/B) in length by the established width of the primary surface. Grades are exclusive of the overrun, but are to be shaped into the overrun grade. The maximum longitudinal grade change cannot exceed ± 2.0 percent per 100 ft. Grade restrictions are also exclusive of other pavements and shoulders. Where other pavements cross the graded area, comply with grading requirements for the specific pavement design (tow ways, taxiways, or aprons as applicable), but hold grade changes to the minimum practicable to facilitate drainage. The graded area is to be cleared and grubbed of stumps and free of abrupt surface irregularities, ditches, and ponding areas. No aboveground structures , objects, or roadways (except air traffic control controlled service roads to arresting gear are permitted in the area to be graded, but gentle swales, subsurface drainage, covered culverts and underground structures are permissible. The transition from the graded area to the remainder of the clear zone is to be as gradual as feasible. For policy regarding permissible facilities, geographical features, and land use in the remainder of the clear zone, refer to guidance furnished by the DoD AICUZ guidelines for clear zones and accident potential zones.(See

						UFC 3-260-1, Appendix B, Section 3.).
6	Transverse grade of area to be graded (in direction of surface drain-age prior to channelization)	Min 2.0 percent Max 10.0 percent				For RQ-7A/B Max 1.7 percent
7	Width of MFZ (ft)	300	NA	300	300	Centered on the extended runway centerline. All items sited within the MFZ in the graded area of the clear zone must be frangible. Items located beyond the Graded Area of the clear zone but within the MFZ must be constructed to be frangible, low impact resistant structures, or semi-frangible (see UFC 3-260-1, Appendix B, Section 13).
8	Length of MFZ (ft)	500	NA	300	500	Extends the full length of the runway plus the graded area of the clear zone.

Table A-11

Accident Potential Zones						
Item		MQ-1	RQ-7A/B	MQ-5	MQ-9	Remarks
No.	Description	Requirement				
1	APZ I length (ft)	1500				APZ I starts at the end of the clear zone, and is centered and measured on the extended centerline. Modifications will be considered if: - The runway is infrequently used. - Prevailing wind conditions are such that a large percentage (that is, over 80 percent) of the operations are in one direction. - Local accident history indicates consideration of different areas. - Most aircraft do not overfly an APZ area as defined here during normal flight operations (modifications may be made to alter these zones and adjust them to conform to the line of flight). - Other unusual conditions exist.
2	APZ I width (ft)	500	120	500	500	
3	APZ II length (ft)	1000				APZ II starts at the end of the APZ I and is centered and measured on the extended runway centerline. Modifications will be considered if: - The runway is infrequently used. - Prevailing wind conditions are such that a large percentage (that is, over 80 percent) of the operations are in one direction. - Local accident history indicates consideration of different areas.

Accident Potential Zones						
Item		MQ-1	RQ-7A/B	MQ-5	MQ-9	Remarks
No.	Description	Requirement				
						- Most aircraft do not overfly an APZ area as defined here during normal flight operations (modifications may be made to alter these zones and adjust them to conform to the line of flight). - Other unusual conditions exist.
4	APZ II width (ft)	500	120	500	500	

Table A-12

Airspace Imaginary Surfaces (See Figures A-13 thru A-20)							
Item		Legend	UAS Runway				Remarks
No.	Description		MQ-1	RQ-7A/B	MQ-5	MQ-9	
1	Primary surface width (ft)	A	500	120	500	500	Centered on the runway centerline.
2	Primary surface length (ft)	A	200	100	200	200	Runway length plus on each end of the runway (extends beyond each end of the runway).
3	Primary surface elevation	A	The elevation of any point on the primary surface is the same as the elevation of the nearest point on the runway centerline.				
4	Clear zone surface (graded	B	500	100	300	500	For land use outside the graded area of the clear zone, apply

Airspace Imaginary Surfaces (See Figures A-13 thru A-20)							
Item		Legend	UAS Runway				Remarks
No.	Description		MQ-1	RQ-7A/B	MQ-5	MQ-9	
	area) (ft)						AICUZ standards.
5	Start of approach-departure surface (ft)	C	200	100	200	200	Measured from the end of the runway.
6	Length of sloped portion of approach-departure surface (ft)	C	10,000	5,000	10,000		Measured horizontally.
7	Slope of approach-departure surface	C	40:1	20:1	40:1		Slope ratio is horizontal: vertical. Example: 40:1 is 40 ft horizontal to 1ft vertical. For clearances over highway and railroads, see UFC 3-260-01, Table 3-8.
8	Width of approach-departure surface at start of sloped portion (ft)	C	500	120	500	500	Centered on the extended runway centerline, and is the same width as the Primary Surface.

Airspace Imaginary Surfaces (See Figures A-13 thru A-20)							
Item		Legend	UAS Runway				Remarks
No.	Description		MQ-1	RQ-7A/B	MQ-5	MQ-9	
9	Width of approach-departure surface at end of sloped portion (ft)	C	3500	1620	3500	3500	Centered on the extended runway centerline.
10	Elevation of approach-departure surface at start of sloped portion (ft)	C	Same as the runway centerline elevation at the threshold.				
11	Elevation of approach-departure surface at end of sloped portion (ft)	C	250				Above the established airfield elevation.
12	Start of transitional surface (ft)	H	250	60	250	250	Measured from runway centerline.
13	End of transitional surface	H	See Remarks				The transitional surface ends at the inner horizontal surface, conical surface, outer horizontal surface, or at an elevation of 150 ft.
14	Slope of transitional	H	4:1				Slope ratio is

Airspace Imaginary Surfaces (See Figures A-13 thru A-20)							
Item		Legend	UAS Runway				Remarks
No.	Description		MQ-1	RQ-7A/B	MQ-5	MQ-9	
	surfaces						horizontal:vertical. 4:1 is 4 ft horizontal to 1 ft vertical. Vertical height of vegetation and other fixed or mobile obstacles and/or structures will not penetrate the transitional surface. Taxiing aircraft are exempt from this requirement.

Note: See Figure A-13 & A-20

A-8. Taxiways. MQ-5B and RQ-7A/B do not require taxiways.

a. Taxiways provide for ground movement of aircraft. Taxiways connect the runway(s) of the airfield with the parking and maintenance areas and provide access to hangars, docks, and various parking aprons and pads. Taxiways are designated alphabetically, avoiding the use of I, O, (could be mistaken for runway numbers) and X (closure marking). Alphanumeric designations may be used when necessary, for example, A1, B3.

(1) Basic. The basic airfield layout consists of a taxiway connecting the center of the runway with the hangar access apron. This system limits the number of aircraft operations at an airfield. Departing aircraft must taxi on the runway to reach the runway threshold. When aircraft are taxiing on the runway, no other aircraft is allowed to use the runway. If runway operations are minimal or capacity is low, the basic airfield layout with one taxiway may be an acceptable layout.

(2) Parallel Taxiway. A taxiway parallel for the length of the runway, with connectors to the end of the runway and hangar access apron, is the most efficient taxiway system. Aircraft movement is not hindered by taxiing operations on the runway, and the connectors permit rapid entrance and exit of traffic.

b. Taxiway Intersection Criteria. To prevent the main gear of an aircraft from coming dangerously close to the outside edge of the taxiway during a turn, fillets are provided at taxiway

intersections. When an aircraft turns at an intersection, the nose gear of the aircraft usually follows the painted centerline marking. The main gears, located to the rear of the nose gear, do not remain a constant distance from the centerline stripe during the turn due to the physical design of the aircraft. The main gears pivot on a shorter radius than does the nose gear during a turn. Intersections should be designed to ensure that the main gear wheels stay a minimum of 5 feet from the pavement edge.

c. Hangar Access Taxiways. Hangar access taxiways are provided for aircraft access onto a hangar access apron. The apron access taxiways should be located to enhance the aircraft's departing sequence and route.

d. Shoulders. Shoulders are provided along a taxiway to allow aircraft to recover if they leave the paved taxiway. Paved shoulders prevent erosion caused by prop wash, support an occasional aircraft that wanders off the taxiway, support vehicular traffic, and reduce maintenance of unpaved shoulder areas. Criteria for UAS taxiway shoulders, including widths and grading requirements to prevent the ponding of storm water, are presented in Table A-13. Manholes, hand holes, and drainage structures constructed within these areas should, at a minimum, be designed as provided in this section. Beyond the paved or unpaved shoulders, sub-grade structures are not designed to support aircraft wheel loads. The top surface of foundations, manhole covers, hand hole covers, and frames should be flush with the grade. Maintenance action is required if the drop-off at the edge of the structure or foundation exceeds three inches.

Table A-13

UAS Taxiways					
Item		MQ-1/9	RQ-7A/B	MQ-5	
No.	Description	Requirement			Remarks
1	Width (ft)	50	NA		30’ for MQ-1C
2	Total width of shoulders (paved and unpaved) (ft)	10	NA		Any or all of the shoulders may be paved or unpaved.
3	Longitudinal grade of taxiway and shoulders	Max 3.0 percent			Grades may be positive or negative but must not exceed the limits specified.
4	Rate of longitudinal taxiway grade change	Max 2.0 percent per 100 ft	NA		The minimum distance between two successive points of intersection (PI) is 500 ft. Changes are to be accomplished by means of vertical curves. Up to a 0.4 percent change in grade is allowed without a vertical curve where non-high-speed taxiways intersect runways.
5	Transverse grade of taxiway	Min 1.0 percent Max 1.5 percent	NA		Taxiway pavements will be centerline crowned. Slope pavement downward from the centerline of the taxiway. When existing taxiway pavements have insufficient transverse gradients for rapid drainage, provide for increased gradients when the pavements are overlaid or reconstructed. The transverse gradients requirements are not applicable at or adjacent to intersections where pavements must be warped to match abutting pavements.
6	Transverse grade of optional	Min 2.0 percent	NA		

UAS Taxiways					
Item		MQ-1/9	RQ-7A/B	MQ-5	Remarks
No.	Description	Requirement			
	paved shoulders	Max 4.0 percent			
7	Transverse grade of unpaved shoulders	1.5 in drop-off at edge of pavement +/- 0.5 in 2.0 percent min, 4.0 percent max	NA		Unpaved shoulders shall be graded to provide positive surface drainage away from paved surfaces.
	Taxiway turning radius (ft)	50	NA		
	Fillet radius at intersections (ft)	50	NA		
8	Clearance from taxiway centerline to fixed or mobile obstacles (taxiway clearance line) (ft)	100	NA		
9	Distance between taxiway centerline and parallel taxiway/taxilane centerline (ft)	125	NA		
10	Grade of area between taxiway shoulder and taxiway clearance line	Min of 2.0 percent prior to channelization Max 10.0 percent			Unpaved areas shall be graded to provide positive surface drainage away from paved surfaces. 1.5-in drop-off at pavement edge, +/- 0.5 in.

e. Towways. A towway is used to tow aircraft from one location to another or from the runway/taxiway to a hangar/storage facility.

(1) Dimensions. Table A-14 presents the criteria for towway layout and design, including clearances, slopes, and grading dimensions. When designing for access to a hangar, flare the pavement to the width of the hangar door from a distance beyond the hangar sufficient to allow maintenance personnel to turn the aircraft around.

Table A-14 Towways

Item		MQ-1/9	RQ-7A/B	MQ-5	Remarks
No.	Description	Requirement			
1	Width (ft)	30	15	20	
2	Total width of shoulders (ft)	10	10	10	Any or all of the shoulders may be paved or unpaved.
3	Longitudinal grade of towway	Max 3.0 percent			Grades may be both positive and negative but must not exceed the limit specified.
4	Rate of longitudinal grade change per 30 m (100 ft)	Max 2.0 percent			The minimum distance between two successive PI is 150 m (500 ft). Changes are to be accomplished by means of vertical curves.
5	Longitudinal sight distance	N/A (See note 1.)			
6	Transverse grade	Min 2.0 percent Max 3.0 percent			Pavement crowned at towway centerline. Slope pavement downward from centerline of towway.
7	Towway turning radius (ft)	75	50	50	Criteria presented here are for straight sections of towway. Pavement width and horizontal clearance lines may need to be increased at horizontal curve locations, based on aircraft alignment on the horizontal curve.
8	Fillet radius at intersections	50	30	40	

	(ft)				
9	Transverse grade of shoulder	(a) 40 mm (1.5 in) drop-off at edge of pavement, +/- 13 mm (0.5 in). (b) 2.0 percent min, 4.0 percent max.			
10	Horizontal clearance from towway centerline to fixed or mobile obstacles	The greater of: ½ the wing width of the towed +25 ft.; or the minimum of 60 ft.			
11	Vertical clearance from towway pavement surface to fixed or mobile obstacles	(Height of towed mission aircraft) + 3 m (10 ft)			
12	Grade (area between towway shoulder and towway clearance line)	Min of 2.0 percent prior to channelization Max 10 percent. (See note 2.)			

NOTES:
1. N/A = not applicable
2. Bed of channel may be flat.

A-9. Aprons and Other Pavements

a. Apron Requirements. Aprons should be sized to allow safe movement of towed aircraft or aircraft operating under their own power.

b. Types of Aprons and Other Pavements. Listed here are types of aprons and other aviation facilities:

(1) Parking Apron (RQ-1/4)

(2) Hangar access apron/Warm up pad

(3) Arm/Disarm pad

c. Global Hawk. Parking areas for the RQ-4A Global Hawk should be designed with dimensions shown in Figure A-24. Parking areas for the RQ-4B Global Hawk should conform to dimensions shown in Figure 23. Locations for tie-downs on the RQ-4A are shown in Figure A-23 but specific dimensions for the in-pavement tie-down point locations have not been provided. Tie-downs should be designed to resist an uplift force equal to the rated capacity of the tie down chain (i.e., typically 10,000 pounds). Special apron areas for hot refueling or arming/disarming are not required for the Global Hawk.

(1) Location. Aprons should be located contiguous to maintenance and hangar facilities. Do not locate them within runway and taxiway lateral clearance distances. A typical access apron is illustrated in Figure A-25 and 26. (For USA based on Vice Chief of Staff of the Army (VCSA) approval of concept, there is no aircraft parking apron authorized for UAS.)

(2) Size. As a general rule, there are no standard sizes for aircraft aprons. Aprons are individually designed to support aircraft and missions at specific facilities. The actual dimensions of an apron are based on the number of authorized aircraft, the maneuvering space, and the type of activity that the apron serves. The ideal apron size affords the maximum parking capacity with a minimum amount of paving.

d. Hangar Access Apron. The pavement that allows access from the taxiway/towway to the hanger is referred to as a “hangar access apron” and is discussed in more detail below based on Army usage.

(1) For USA the MQ-1C parking space width is 65 feet, and the parking space length is 40 feet.

(2) Specific Aircraft. If the assigned aircraft are predominantly one type, the access apron will be based on the specific dimensions of that aircraft, i.e. an RQ-7A/B parking space has a 30 feet in width and 24 feet in length, the MQ-5B parking space has a 44 feet in width and 33 feet in length.

(3) Layout. The hangar access/ parking apron will be sized to accommodate a minimum of two UAS’s with an area for one UAS to pass by.

Table A-15

Hangar Access Apron					
Item		MQ-1/9	RQ-7A/B	MQ-5	Remarks
No.	Description	Requirement			
1	Length (ft)	200	15	75	(Army) For small MQ-1 hangars the length is 100’.
		Access aprons are located between the taxiway/towway and the front of the hangar. The hangar cannot be located within the taxiway/towway clearance distance.			
2	Width (ft)	400	32	100	Pavement should be sized for type of aircraft, number of hangar bays, and location of hangar bays. (Army) For small MQ-1 hangars the width is 160’.
	Grades in direction of drainage	Min ±0.5 percent Max ±1.5 percent			
3		Min -1.0 percent first 50 ft from hangar			NFPA 415 requires aircraft fueling ramps to slope away from terminal buildings, aircraft hangars, aircraft loading walkways, or other structures.
4	Width of shoulders (total width including paved and unpaved) (ft)	10	5		
5	Width of paved shoulders	Not required			
6	Transverse grade of unpaved shoulder	(a) 1.5 in drop-off at edge of pavement. (b) 2.0 percent min, 4.0 percent max.			

Hangar Access Apron					
Item		MQ-1/9	RQ-7A/B	MQ-5	
No.	Description	Requirement			Remarks
7	Wingtip clearance to fixed or mobile obstacles (ft)	25	10 with wing walkers		Along length of access apron. Wingtip clearance at entrance to hangar may be reduced to 10 ft either side of the door for RQ-4, MQ-1/9, 5 ft either side for RQ-7A/B and MQ-5B.
8	Grade (area between access apron shoulder and wingtip clearance line)	Max 10.0 percent			If the wingtip clearance line falls within the access apron shoulder, no grading is required beyond the access apron shoulder.

A-10. Mooring and Grounding Points

a. Mooring and Grounding Point. A mooring and grounding point is a mooring casting with a grounding rod attached. Aircraft mooring and grounding points are used to secure parked aircraft and also serve as electrodes for grounding connectors for aircraft. Combined mooring and grounding points have previously been used by the Army but are not currently used as they do not meet mooring and grounding design loads.

b. Mooring Point. A mooring point is a mooring casting without a grounding rod attached, used to secure aircraft during engine run-up. Mooring points are used by the Army.

c. Static Grounding Point. A static grounding point is a ground rod attached to a casting. The casting protects the ground rod but does not provide mooring capability. Static grounding points are used by the U.S. Army on aprons and in hangars. Grounding point requirements are described in UFC 3-260-01, Appendix B, Section 11.

d. Mooring Points for Army UAS

(1) Type. A mooring point consists of a ductile iron casting, as shown in Figure A-21. The mooring casting is an oval-shaped casting with a cross-rod to which mooring hooks are attached.

(2) Design Load. Unless specifically waived in writing by the facility commander, all new construction of Army aircraft parking aprons will include aircraft mooring points designed for a 67,800-Newton (15,250-pound) load, and applied at 19.15 degrees (19.15°) from the pavement surface, as illustrated in Figure A-22.

(3) The mooring points are located five feet fore and aft of the grounding point.

(4) Mooring point Layout for RQ-1/4 USAF/USN. See figure A-23.

Figure A-21 Mooring Point

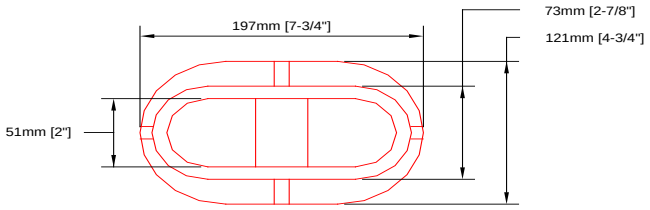

PLAN
N.T.S.

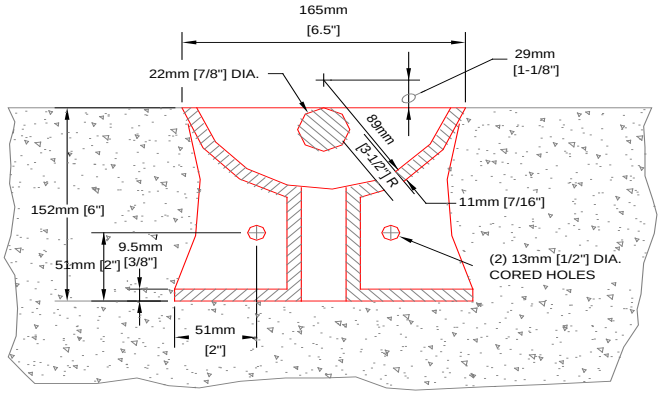

SECTION
N.T.S.

NOTE
MOORING DEVICE TO BE CAST
IN DUCTILE IRON 80-55-06
OR EQUAL.

Figure A-22 Load Testing of Mooring Points

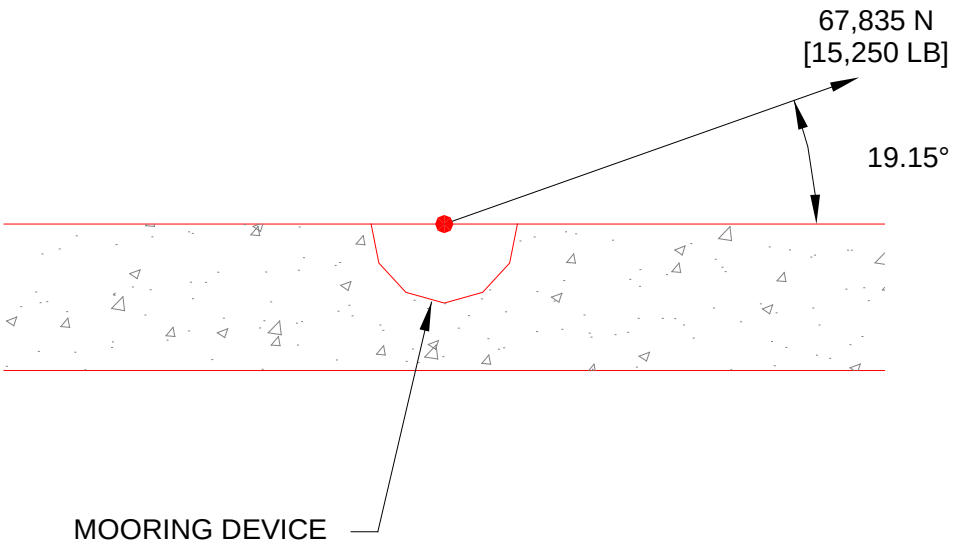

NOTES

1. MOORING TESTS SHOULD BE ACCOMPLISHED USING A HYDRAULIC RAM OR SIMILAR DEVICE AND AN APPROPRIATE REACTION (HEAVY VEHICLE, ETC.) THAT IS CAPABLE OF APPLYING A TENSILE LOAD OF 71,172 N [16,000 LB]

2. THE LENGTH OF MOORING CHAIN AND CONNECTING SHACKLE SHOULD BE SELECTED IN SUCH A WAY THAT AN ANGLE OF 19.15° FROM THE PAVEMENT SURFACE (SEE ABOVE FIGURE) CAN BE MAINTAINED DURING LOAD TESTING.

3. APPROPRIATE SAFETY PRECAUTIONS SHOULD BE TAKEN AT ALL TIMES DURING LOAD TESTING OPERATIONS.

4. THE MOORING POINTS SHOULD BE LOADED IN 1,130 kg [2,500 LB] INCREMENTS UP TO 44,482 N [10,000 LB] AND IN 4,448 N [1000 LB] INCREMENTS UP TO 71,172 N [16,000 LB] WITH EACH LOAD INCREMENT HELD FOR AT LEAST 60 SECONDS.

5. TO PASS TEST REQUIREMENTS, MOORING POINTS SHALL NOT DEFORM PERMANENTLY UNDER 71,172 N [16,000 LB] LOAD.

Figure A-23 Mooring Layout for the RQ-4A Global Hawk

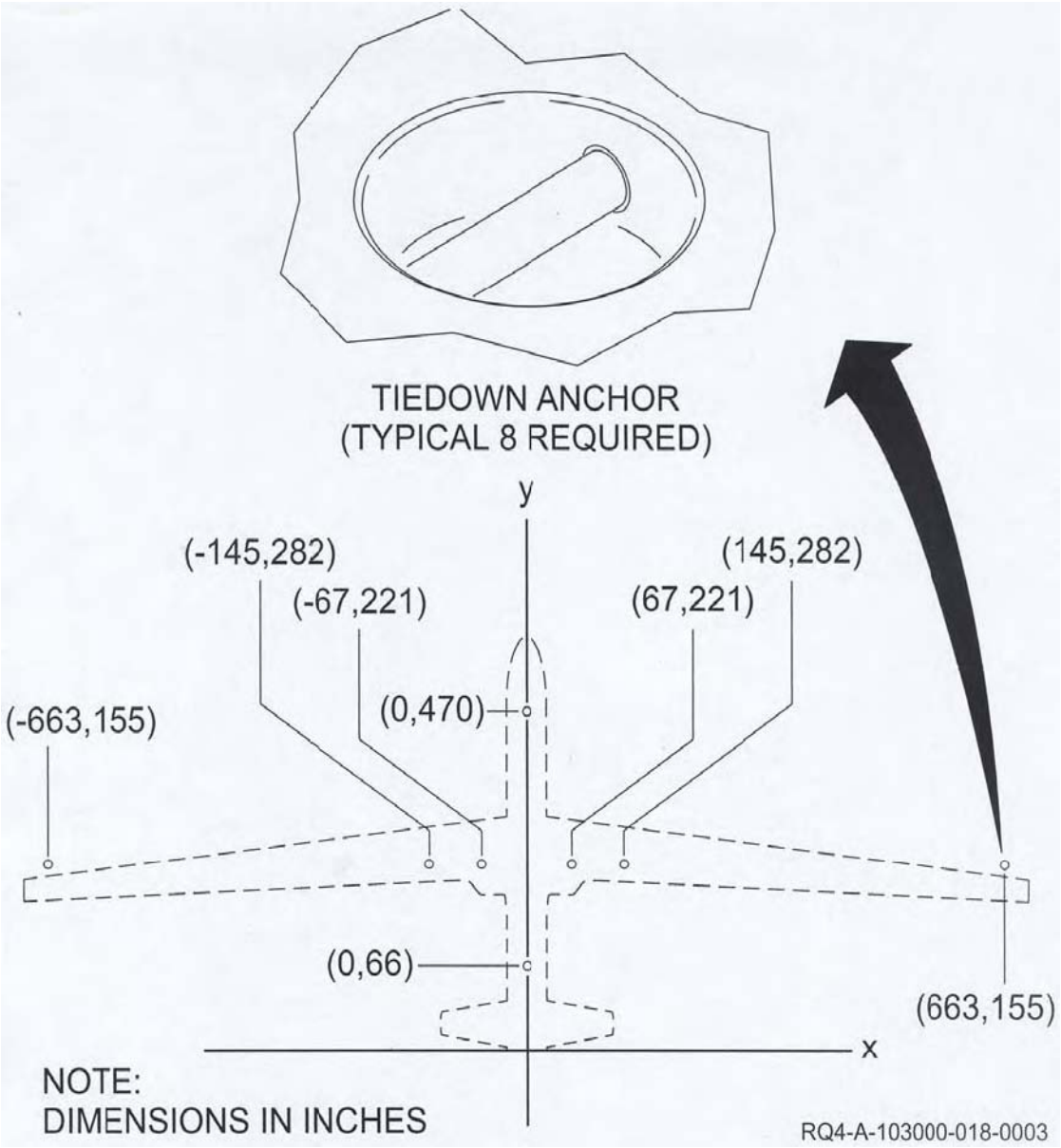

Figure A-24 Parking Area Dimensions for RQ-4A Global Hawk

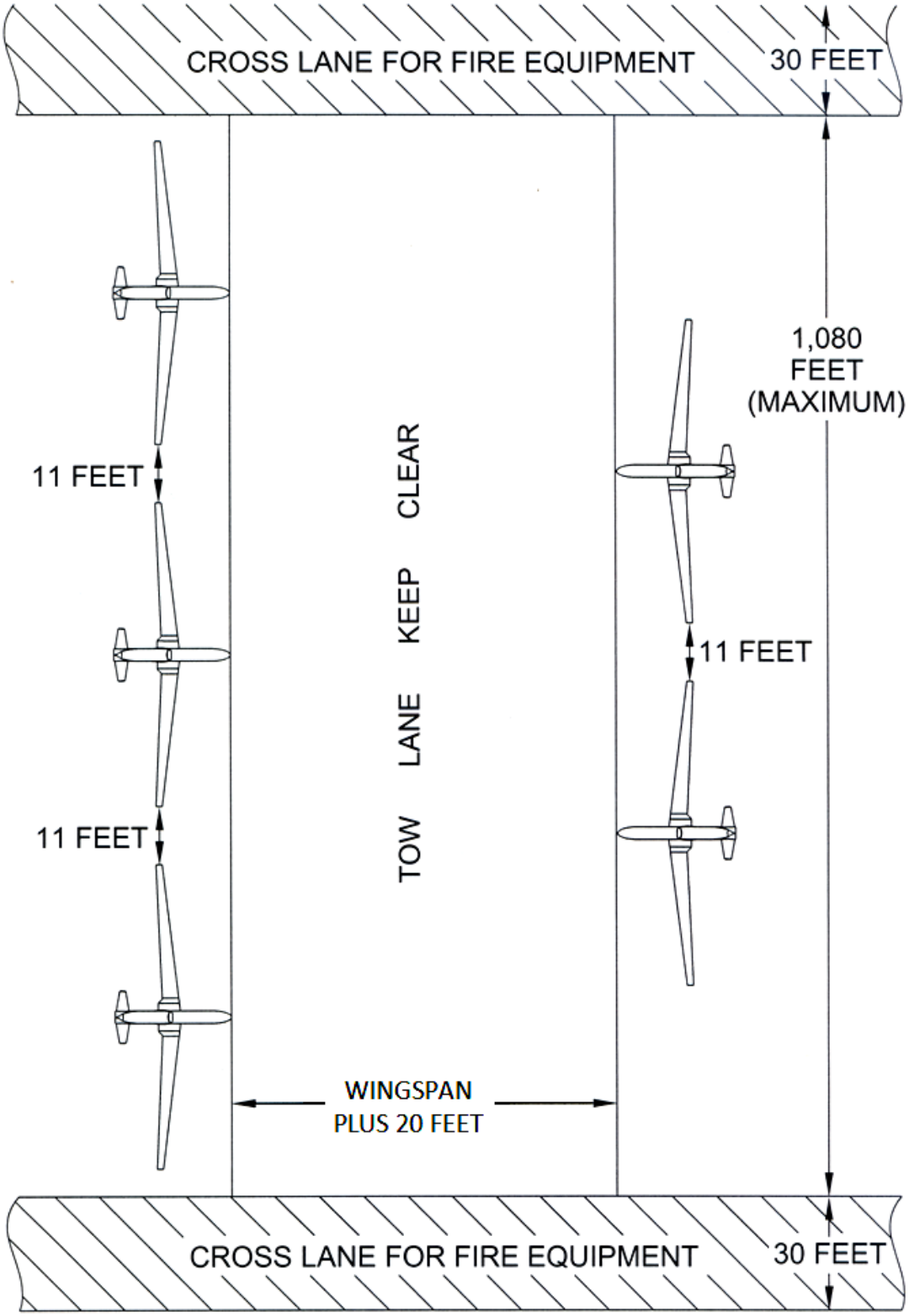

e. Layout. UAS hangar access apron**.** Mooring points should be as indicated in Figure A-21.

Figure A- 25 MQ-1C small hangar access apron

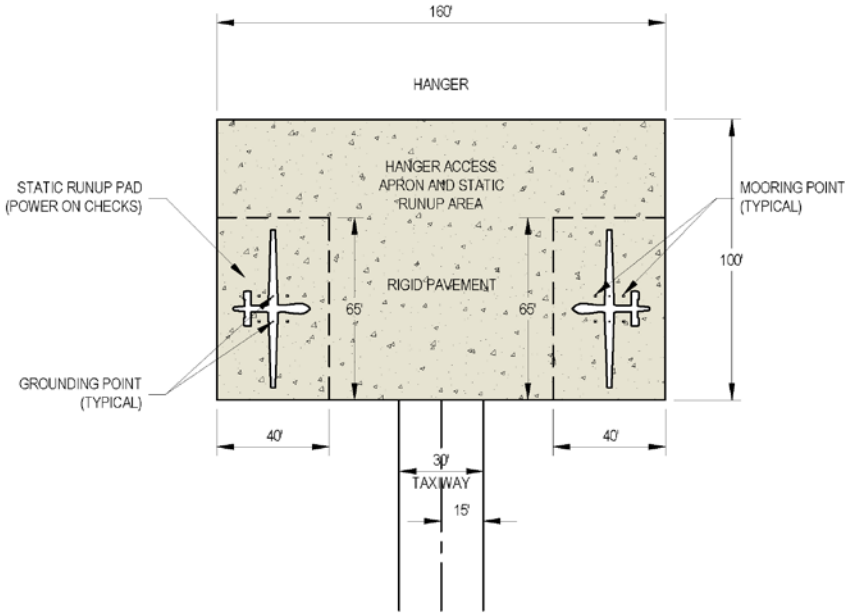

Figure A-26 MQ-1C large hangar access apron

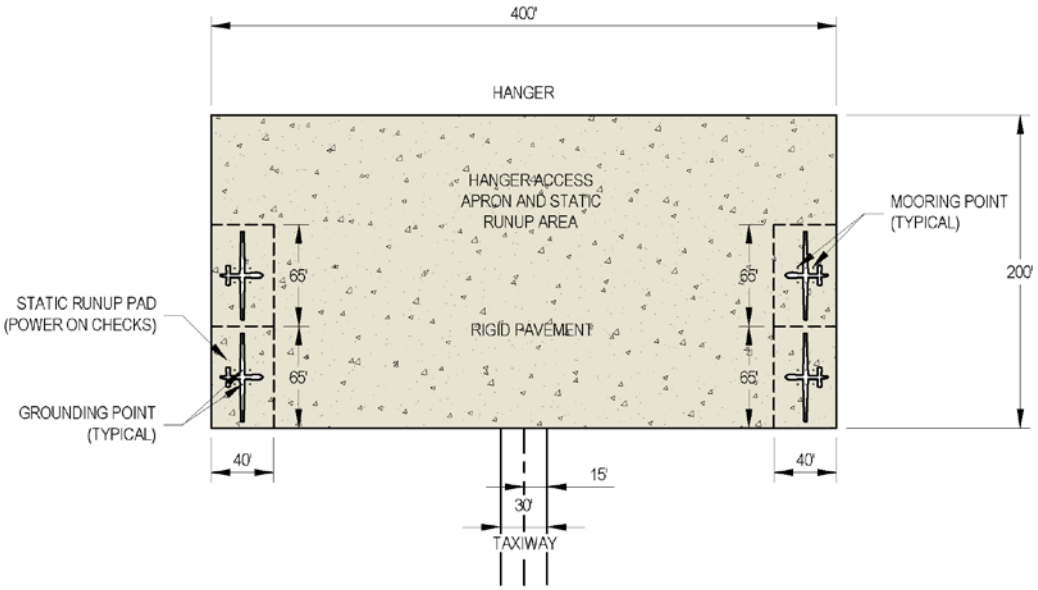

f. Arm/Disarm Pad. The arm/disarm pad is used for arming aircraft before takeoff and for disarming (safing) weapons retained or not expended upon their return. Do not site arm/disarm pads or taxiways to these facilities in a way that will allow penetration of the approach-departure clearance surface.

(1) Location. Arm/disarm pads should be located adjacent to runway thresholds and sited such that armed aircraft are oriented in the direction of least populated areas or towards revetments.

(2) Turning Radius. The turning radius for taxilanes on arm/disarm pads should be designed to provide the minimum allowable turn under power of the largest aircraft that will use the arm/disarm pad.

(3) Access Road. An all-weather access road should be constructed to the arm/disarm pad from outside the airfield's taxiway and runway clearance areas. Design this road in accordance with UFC 3-250-18FA and UFC 3-250-01FA. Access roads must not encroach on taxiway clearances or taxilane wingtip clearance requirements (except at necessary intersections with these areas), nor shall any parking area associated with the access road be sited so that maintenance vehicles will violate the approach-departure clearance surface or any Navigation Aid (NAVAID) critical area.

A-11. Lighting. Not Required. If lighting is installed it will be IAW UFC 3-535-0.

A-12. Marking. Markings are required to support Global Hawk, Predator, Reaper and Gray Eagle UAS. Required runway surface markings will be as indicated below.

a. Apply markings using the UFGS-32 17 24.00 10 colors.

b. Runways. For a visual flight rules (VFR) runway that is intended for use only during visual meteorological conditions (VMC), provide the following minimum markings:

(1) Runway designation marking. Markings on serviceable runways will consist of centerline marking and runway direction numbers, and the letters “UAS” without the border. The letters “UAS” shall be centered on the runway, see Figure A-28.

(2) Centerline stripes. The runway centerline marking will be a solid and continuous retroreflective white line, one foot in width. The centerline stripe of each runway will terminate 20 feet from the runway direction numbers. The runway centerline marking identifies the physical center of the runway and provides alignment guidance during takeoff, landing and taxiing operations. A runway centerline marking is located along the centerline of the runway between the runway designation markings. Centerline widths are not to be decreased even if all other marking sizes are proportioned narrower because of runway width.

(3) Runway Overrun and Shoulder Areas. For overrun areas chevrons shall be yellow. Runway shoulder markings (deceptive surfaces), and closed runway markings are non-reflective yellow (USAF comply with AFI 32-1042 and ETL 04-2).

c. Runway holding position markings.

(1) Purpose**.** At airports with operating air traffic control towers, runway holding position markings identify the location on a taxiway where a pilot/operator is to stop when he/she does not have clearance to proceed onto the runway. At airports without operating control towers these runway holding position markings identify the location where a pilot/operator should assure there is adequate separation with other aircraft before proceeding onto the runway.

(2) Location. The runway holding position markings should be located on all taxiways that intersect runways based upon the most critical aircraft using the runway and extend across the entire width of the taxiway and paved shoulder. These markings are also located on taxiways crossing through the runway approach area. This protects the following surfaces and ensures that an aircraft on the taxiway will not penetrate the surface used to locate the runway threshold, approach/departure, transitional surface, see Figure A-29. Locating holding position markings other than in accordance with the preceding criteria must be approved by the appropriate service. Holding position markings should not be used for any situation other than those described in this paragraph.

(3) If the holding position marking is outlined in black, taxiway edge markings should abut the black outline on both sides (solid yellow line and dashed yellow line).

(4) If the holding position marking is not outlined in black, taxiway edge markings should abut the holding position marking on both sides (solid yellow line and dashed yellow line).

(5) Color**.** Holding position markings on taxiways are retroreflective yellow**,** and will be outlined in black on light colored pavements.

(6) Characteristics. Runway holding position markings consist of a set of 4 yellow lines and 3 spaces, each 12 inches (30 centimeter (cm)) in width. The solid lines of these markings are always on the side where the aircraft is to hold. The markings are installed perpendicular to the taxiway centerline but may be canted from a perpendicular position in unique situations. In these cases, it may be necessary to install additional holding position signs, runway guard lights, etc. Holding position lines on taxiways may be angled as needed where two or more taxiways intersect at the hold line. On angled taxiways the distance is measured from the runway centerline to the taxiway centerline. On an angled taxiway, locate the markings such that no portion of an aircraft (i.e., wing tip) placed at the holding position line will penetrate the runway safety area. Instrument Landing System/Microwave Landing System (ILS/MLS) critical areas holding position markings, intermediate holding position markings where a taxiway/taxiway intersect, and taxiway shoulder markings shall be installed.

d. Taxiways and Aprons. Use retroreflective yellow for all taxiway, apron, and taxi-lane markings.

(1) Taxiway marking. Taxiway marking. All taxiways shall have centerline markings and runway holding position markings whenever they intersect a runway. The taxiway line stops 3 feet from the hold position marking. Taxiway edge markings shall be installed wherever there is a need to separate the taxiway from a pavement that is not intended for aircraft use or to delineate the edge of the taxiway that is not otherwise clearly visible. Taxiway and taxiway edge markings are 6 inches in width.

(2) Location**.** On a straight section of a taxiway, taxiway centerline markings are provided along the centerline of the designated taxiway. On a taxiway curve, the markings continue from the straight portion of the taxiway at a constant distance from the outside edge of the taxiway.

(3) At taxiway intersections with runway ends, the taxiway centerline is terminated at the runway edge except if the taxiway centerline continues across the runway when it is a crossing route as designated by the local Air Traffic Facility.

(a) On all other taxiways, the taxiway centerline marking curves onto the runway and extends parallel to the runway centerline marking for a distance of 200 feet (60 m) beyond the point of tangency, and three feet from the runway centerline measured near-edge to near-edge. This lead-on or lead-off line (the taxiway centerline) is interrupted for all runway markings.

(b) For taxiways crossing a runway, either straight across or offset and normally used as a taxi route, the taxiway centerline marking may continue across the runway but is normally interrupted for any runway markings. For low visibility operations, when the runway visual range is below 1200 feet (360 m), taxiway centerline markings continue across all runway markings with the exception of the runway designation marking.

e. Surface painted signs. Lighted taxiway identification signs are described in UFC 3-535-01. If it is necessary to furnish additional guidance at intersections, the information shall be provided on the taxiway before the intersection. Runway and taxiway identification numbers and letters are marked in six by two foot (1.83 by 0.610 m) block letters formed with a six inch (152 mm) stroke. Provide an arrow above the identifier to show direction. Figure A-30 shows typical identification numbers and letters. In cases where double letters or a letter and a number are used in combination (e.g., DD or D1), separate the digits with a two foot (0.610 m) gap.

f. Non-movement area boundary markings Non-movement area boundary markings are used to delineate the movement area, i.e., area under air traffic control, from non-movement area, i.e. area not under air traffic control. This marking should be used only when the need for this delineation is specified in the letter of agreement between the airport operator and air traffic control tower, which designates the movement area.

(1) Location. Locate the non-movement area boundary marking on the boundary between the movement and non-movement area. In order to provide adequate clearance for the wings of taxiing aircraft, this marking should never coincide with the edge of a taxiway.

(2) Layout. The non-movement area boundary marking consists of two yellow (one solid and one dashed) as shown in Figure A-32. The solid yellow line is located on the non-movement area side while the dashed yellow line is located on the movement area side. Each line is 6 inches (152 mm) in width with six inch (152 millimeter (mm)) spacing between lines. The width of the lines and spaces may be doubled to one foot (0.305 m). The use of this wider marking is strongly encouraged at locations having difficulty discerning the location of the movement area. The dashes are three feet (0.914 m) in length with 3-foot (0.914 m) spacing between dashes. If a taxiway centerline intersects a non-movement area boundary marking, the boundary marking shall be six inches (152 mm) from the taxiway centerline on the aircraft holding side and three feet (0.914 m) from the taxiway centerline on the movement area side.

Figure A-27

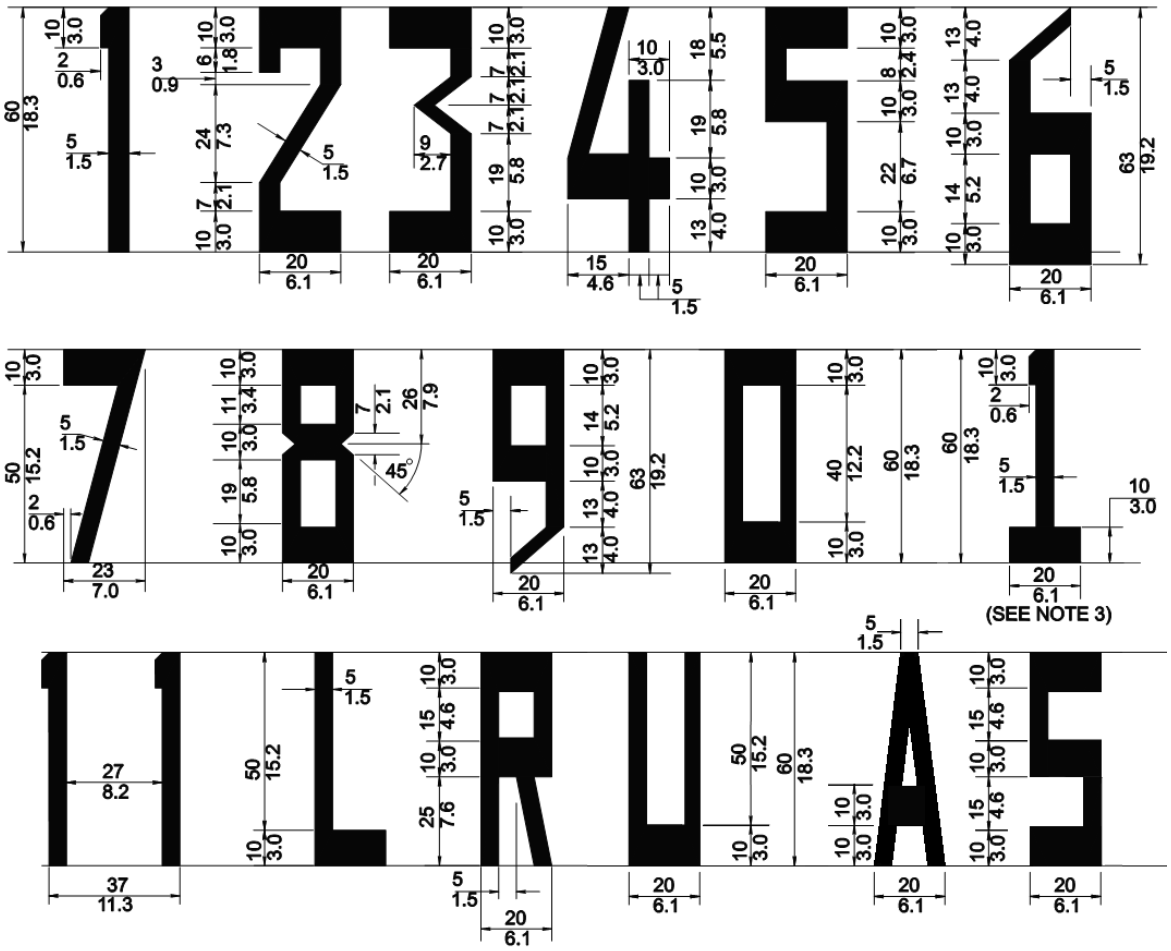

NOTES:

1. ALL LETTERS AND NUMERALS EXCEPT THE NUMBER ELEVEN AS SHOWN ARE HORIZONTALLY SPACED 10 FEET (3.0 METERS) APART.

2. DIMENSIONS ARE EXPRESSED THUS $\frac{\text{FEET}}{\text{METERS}}$ e.g. $\frac{30}{9}$

3. THE NUMERAL 1, WHEN USED ALONE, CONTAINS A HORIZONTAL BAR TO DIFFERENTIATE IT FROM THE RUNWAY CENTERLINE MARKING.

4. WHEN THESE MARKINGS ARE BEING USED ON RUNWAYS FOR RQ-7A/B OR MQ-5 ONLY (50' WIDE), THEN ALL DIMENSIONS SHOWN ON THIS DETAIL SHALL BE REDUCE BY ONE HALF.

Figure A-28

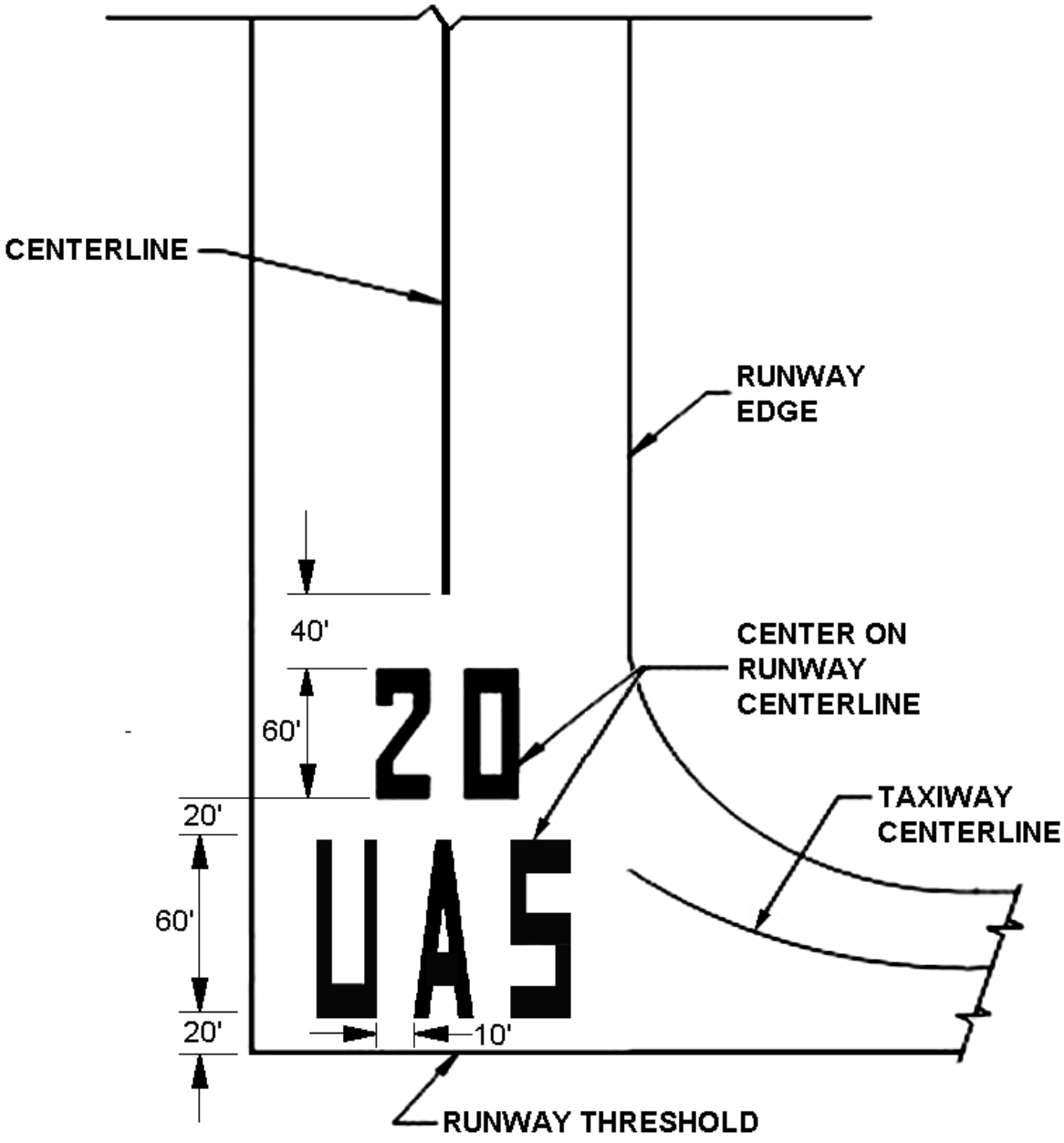

NOTE:

WHEN THESE MARKINGS ARE BEING USED ON RUNWAYS FOR RQ-7A/B OR MQ-5 ONLY (50' WIDE), THEN ALL DIMENSIONSION SHOWN ON THIS DETAIL SHALL BE REDUCED BY ONE HALF. RUNWAYS FOR THESE AIRCRAFT WILL NOT HAVE THE CENTRLINE OR NUMERICAL DIRECTION MARKINGS EITHER.

Figure A-29

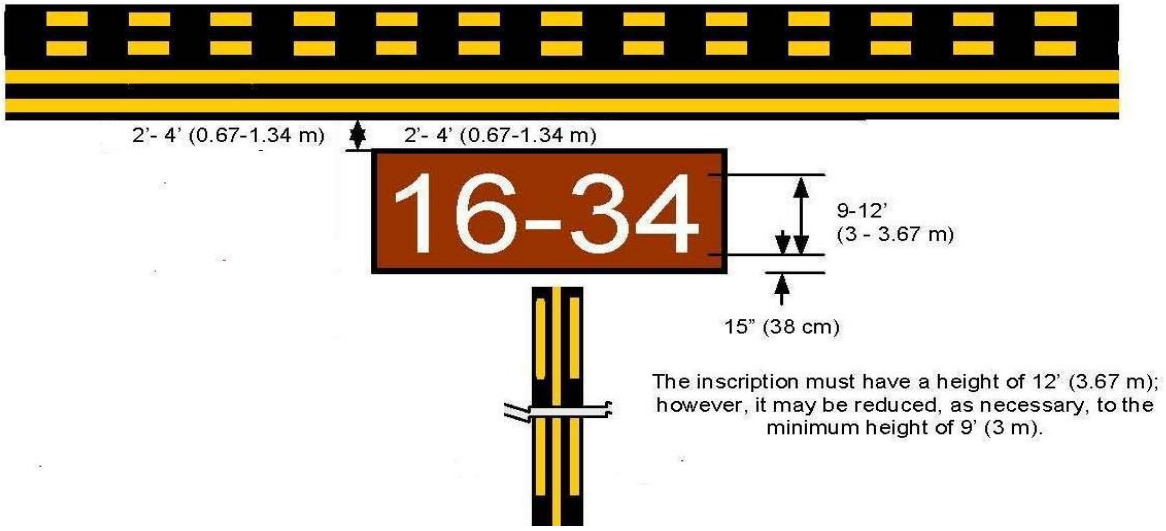
2'- 4' (0.67-1.34 m)
2'- 4' (0.67-1.34 m)
16-34
9-12'
(3 - 3.67 m)
15" (38 cm)
The inscription must have a height of 12' (3.67 m); however, it may be reduced, as necessary, to the minimum height of 9' (3 m).

Figure A-30

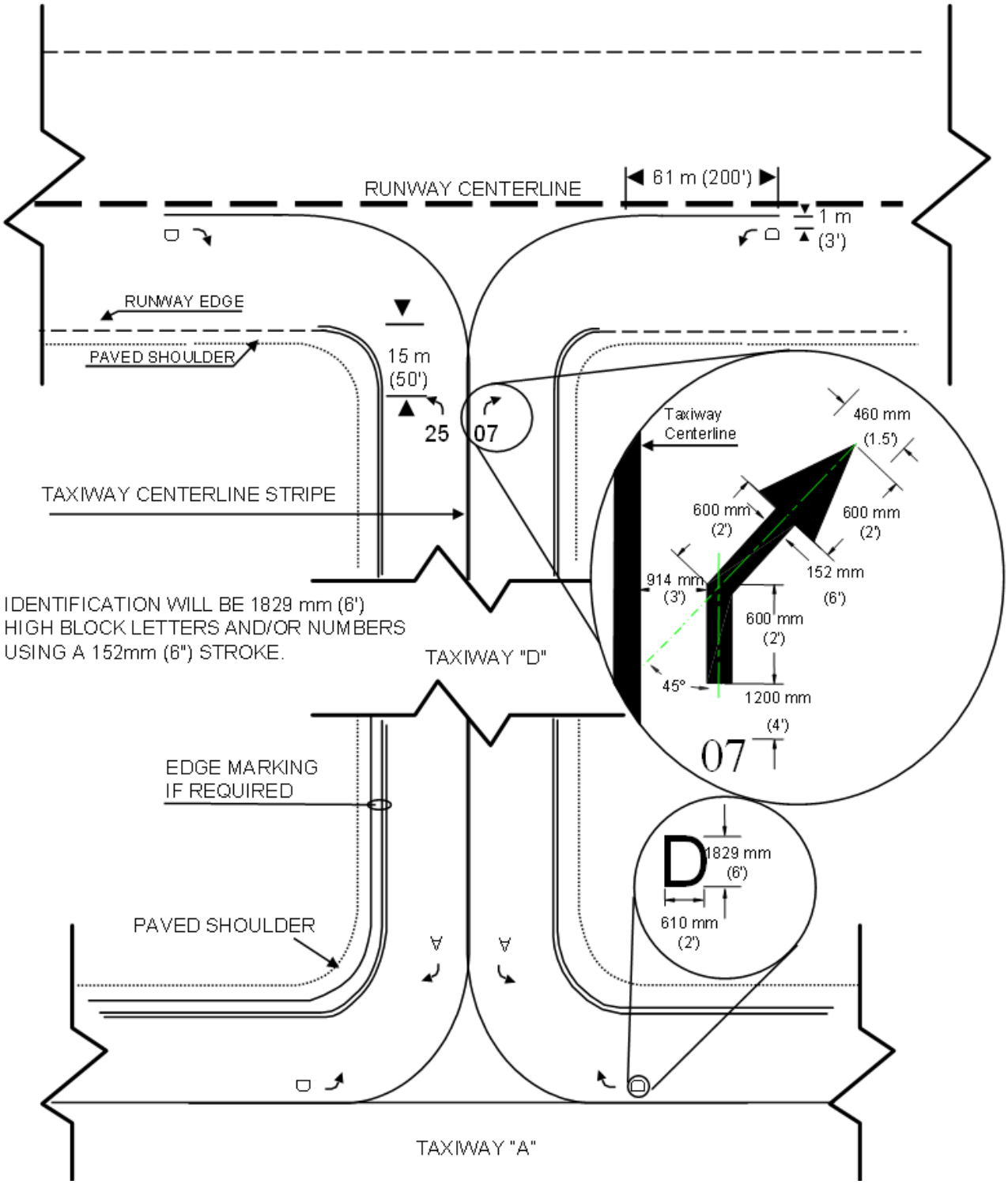
RUNWAY CENTERLINE
61 m (200')
1 m
(3')
RUNWAY EDGE
PAVED SHOULDER
15 m
(50')
25
07
TAXIWAY CENTERLINE STRIPE
IDENTIFICATION WILL BE 1829 mm (6')
HIGH BLOCK LETTERS AND/OR NUMBERS
USING A 152mm (6") STROKE.
TAXIWAY "D"
Taxiway
Centerline
460 mm
(1.5')
600 mm
(2')
600 mm
(2')
914 mm
(3')
152 mm
(6')
600 mm
(2')
45°
1200 mm
(4')
07
EDGE MARKING
IF REQUIRED
D
1829 mm
(6')
610 mm
(2')
PAVED SHOULDER
TAXIWAY "A"

Figure A-31

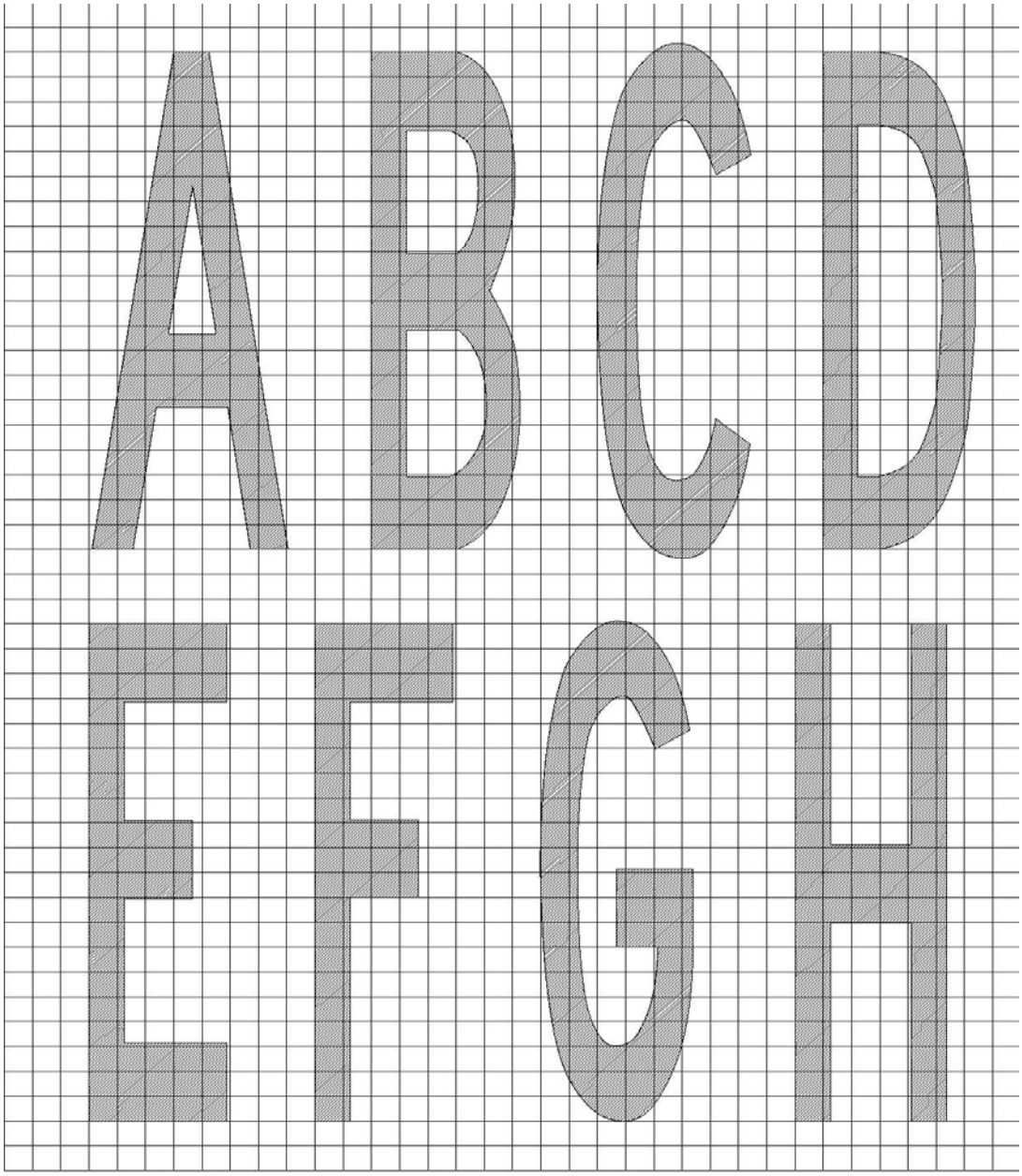

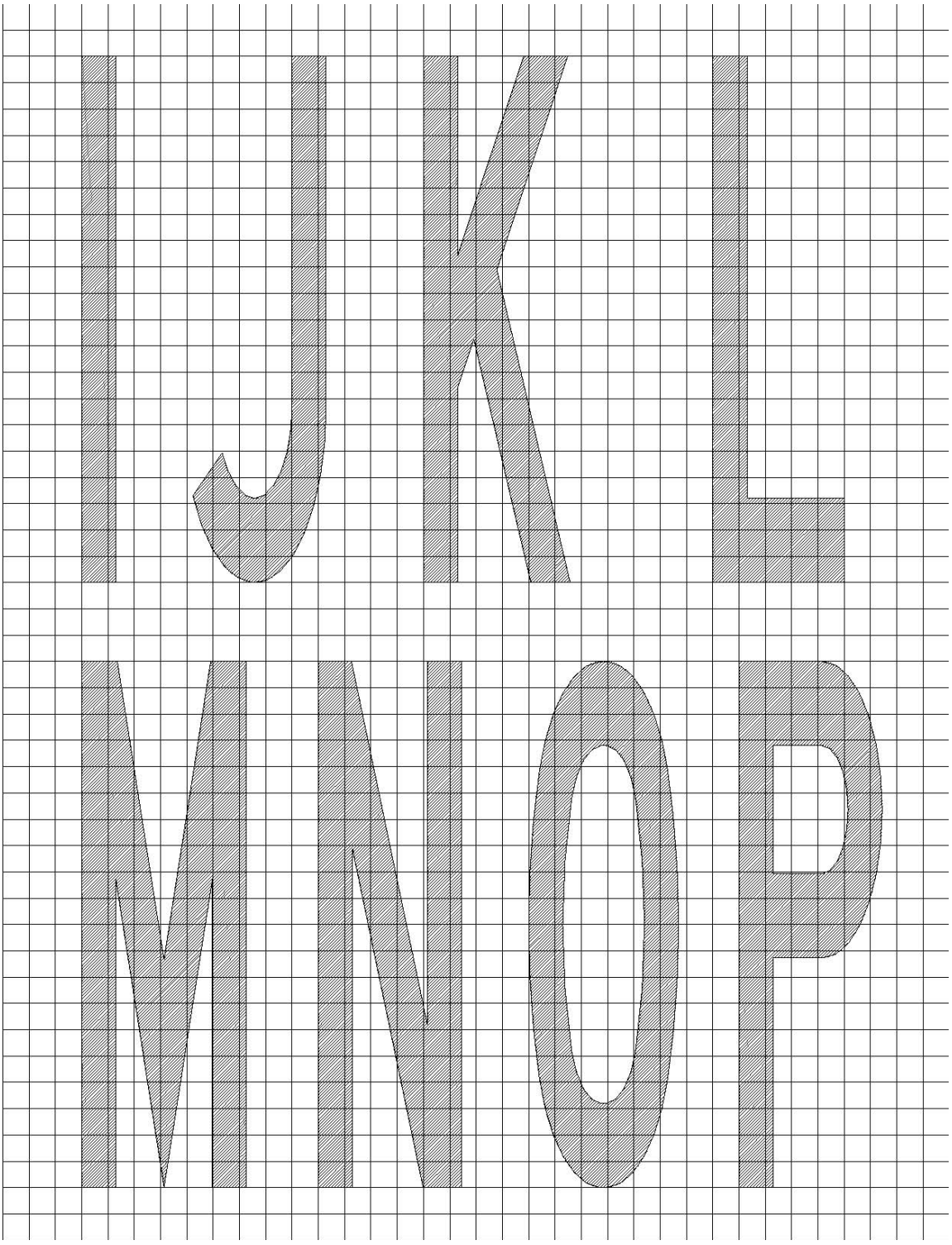
JKL
MNOP

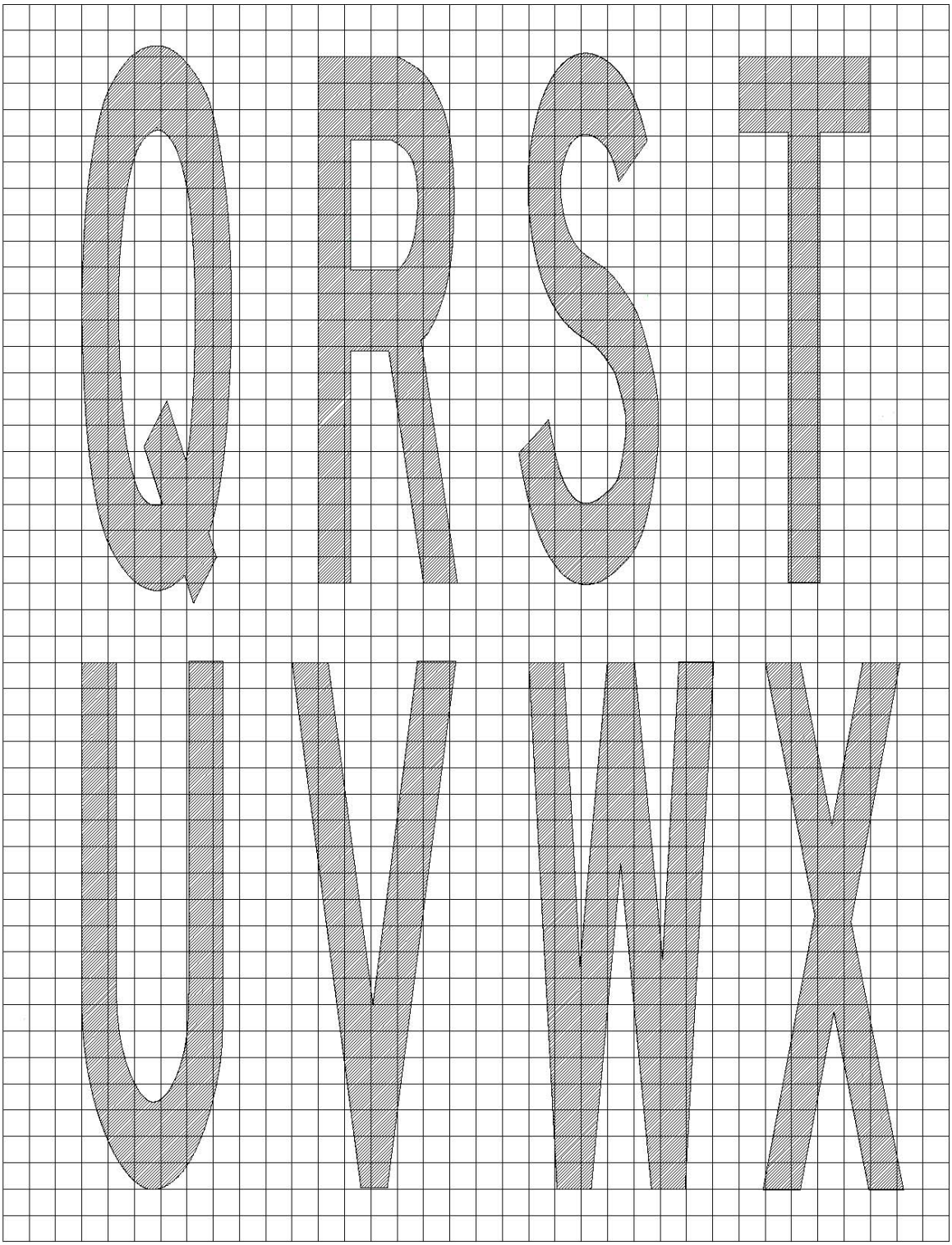

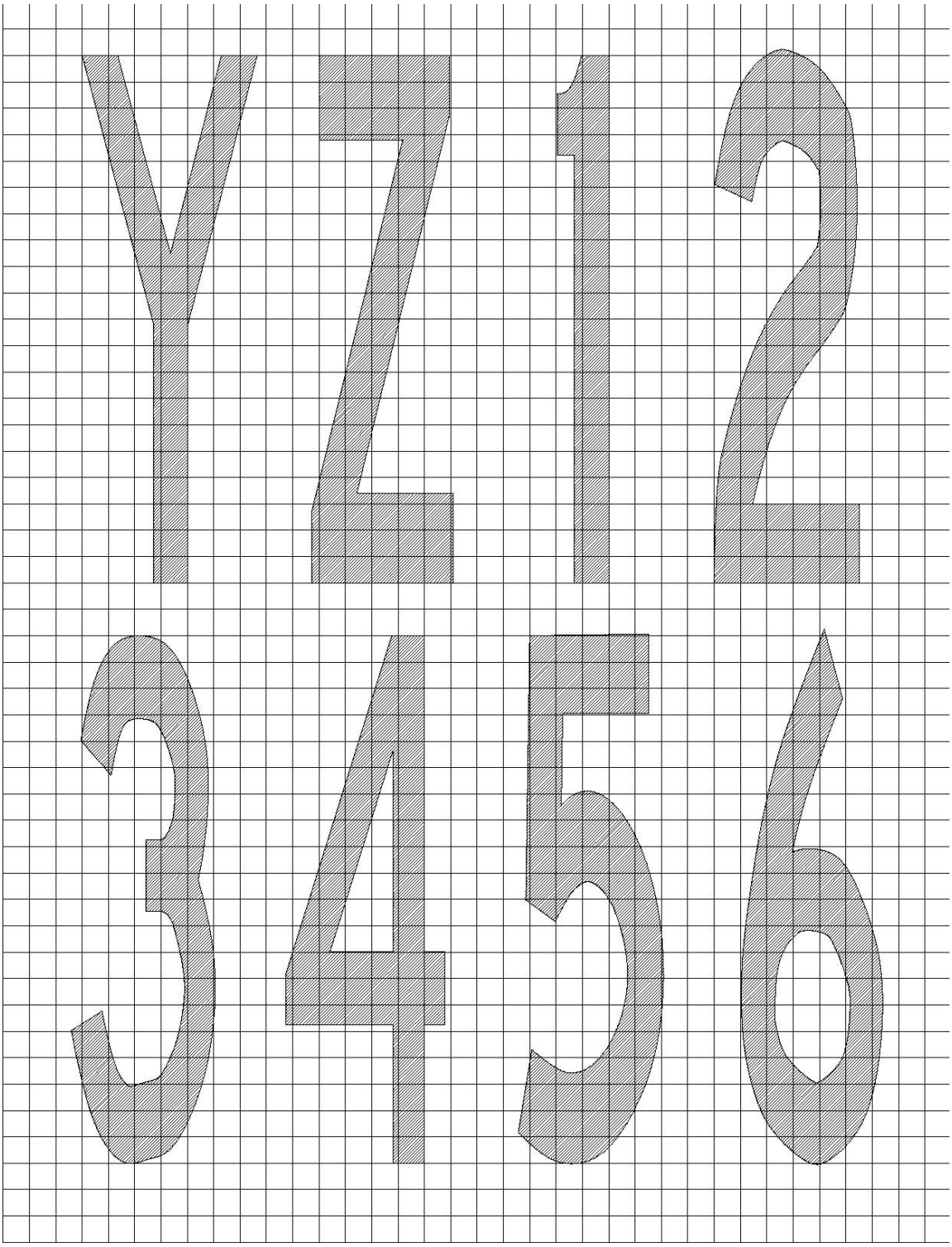
7
1
2
3
4
5
6

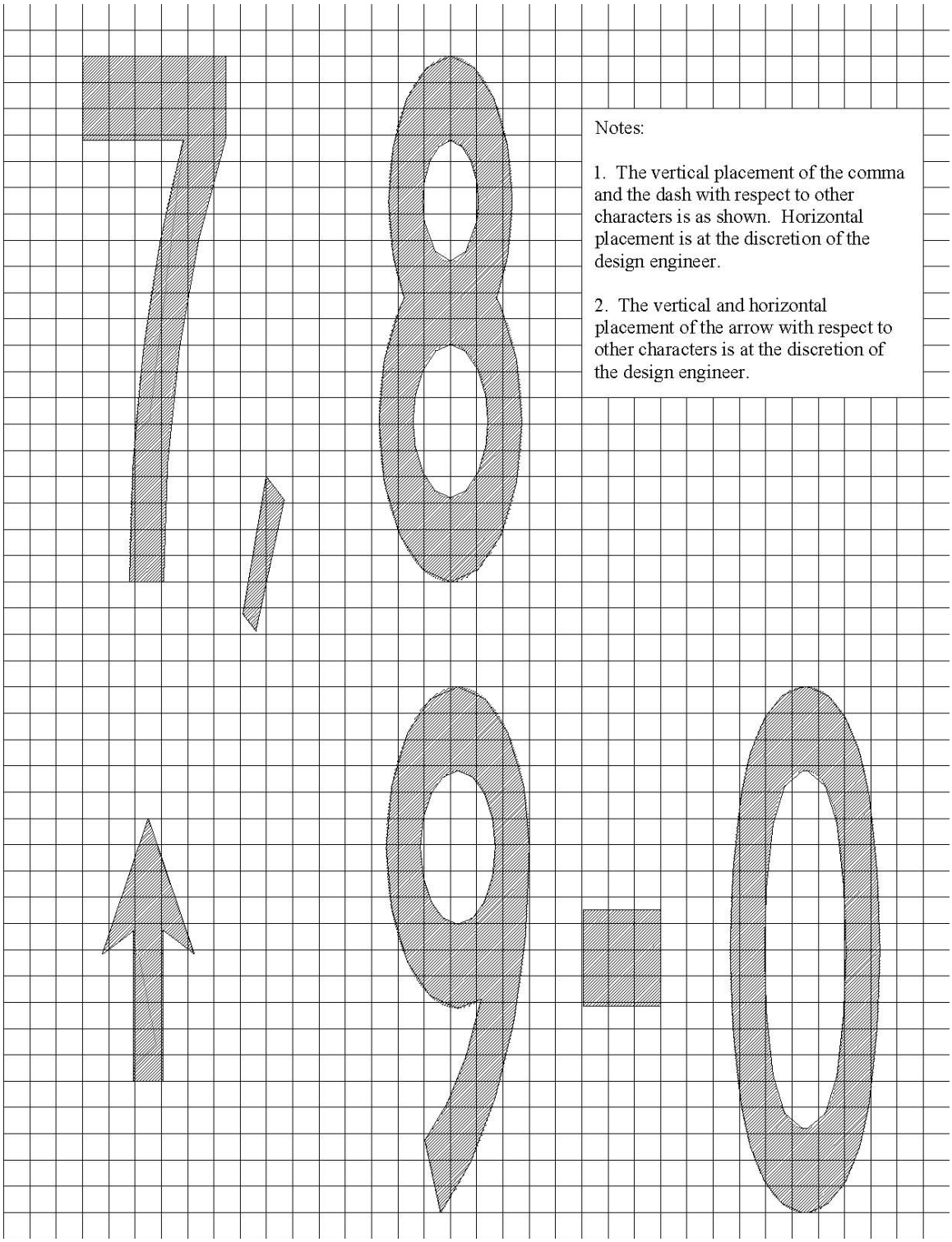

Notes:

1. The vertical placement of the comma and the dash with respect to other characters is as shown. Horizontal placement is at the discretion of the design engineer.

2. The vertical and horizontal placement of the arrow with respect to other characters is at the discretion of the design engineer.

Figure A-32

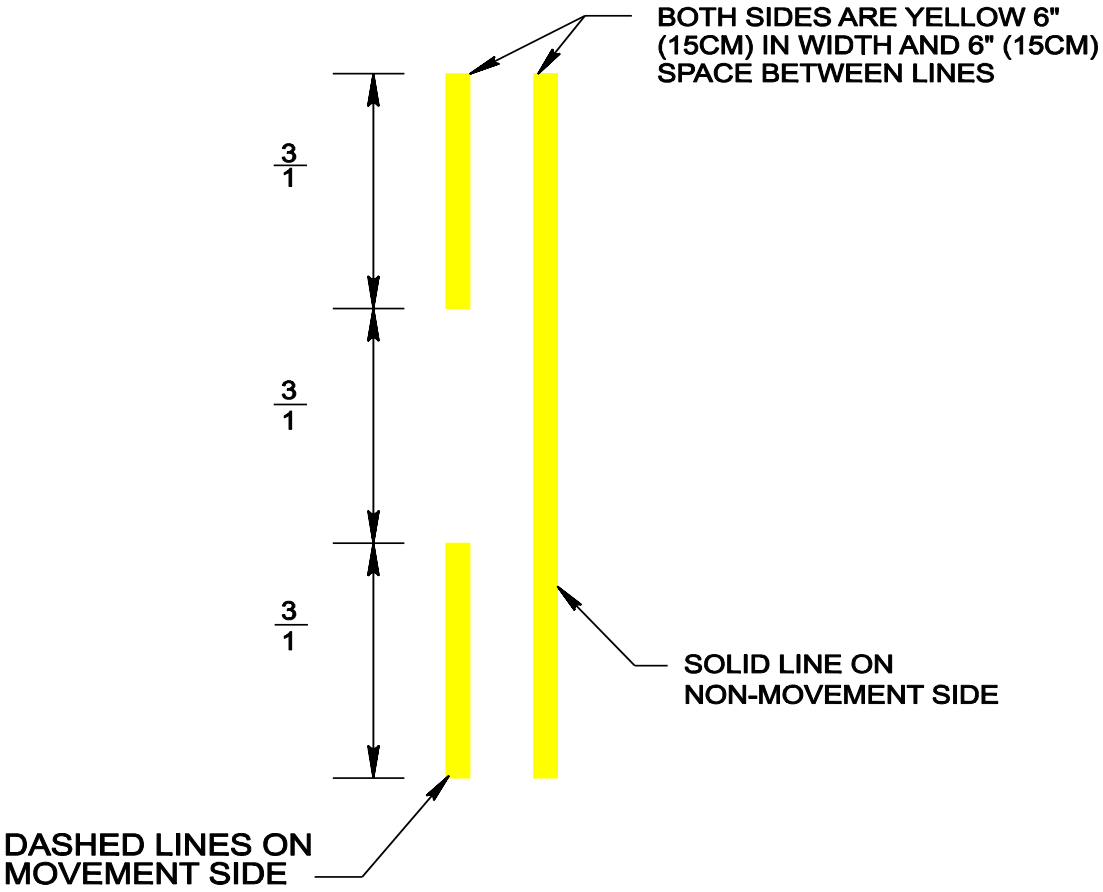
BOTH SIDES ARE YELLOW 6" (15CM) IN WIDTH AND 6" (15CM) SPACE BETWEEN LINES
3/1
3/1
3/1
SOLID LINE ON NON-MOVEMENT SIDE
DASHED LINES ON MOVEMENT SIDE

APPENDIX B

Contingency Theater Operations

B-1. Semi permanent Airfields. These airfields are for more sustained use (6 to 24 months), include a higher standard of design and construction, and allow operations under nearly all weather conditions. Rear area airfields are normally surfaced with various types of matting and membranes as well as bituminous asphalt and concrete.

B-2. If the UAS is collocated on a manned airfield/air base the criteria in Field Manual (FM) 5-430-00-2/Air Force Joint Pamphlet (AFJPAM) 32-8013, Vol II apply and are surfaced with matting, asphalt or concrete.

B-3. If located adjacent to a manned runway, Table A-7 applies for separation distances.

Table B-1

	Item	UAS Runway				Remarks
No.	Description	MQ-1	RQ-7A/B	MQ-5	MQ-9	
1	Length	4500’	800’	2500’	6000	MQ-1C>9000’ elevation runway length is 5500’
2	Width	75’	50’	50’	100’	
3	Width of shoulders	10’	5’	10’	10’	Shoulder may be paved or unpaved
	Longitudinal grades of runway and shoulders	Grades may be both positive and negative but must not exceed the limit specified in UFC 3-260-1. Grade restrictions are exclusive of other pavements and shoulders. Where other pavements tie into runways, comply with grading requirements for tow ways, taxiways, or aprons as applicable, but hold grade changes to the minimum practicable to facilitate drainage.				
5	Longitudinal runway grade changes	No grade change is to occur less than 1,000 ft from the runway end	No grade change is to occur less than 100 ft from the runway	No grade change is to occur less than 300 ft	No grade change is to occur less than 1,000 ft from the runway	Where economically feasible, the runway will have a constant centerline gradient from end to end. Where terrain dictates the need for centerline grade changes, the distance between two successive

	Item	UAS Runway				Remarks
No.	Description	MQ-1	RQ-7A/B	MQ-5	MQ-9	
			end	from the runway end	end	points of intersection (PI) will be not less than 1,000 ft (MQ-1 and MQ-9),100 ft (RQ-7A/B) and 300 ft (MQ-5) and two successive distances between PIs will not be the same.
6	Rate of longitudinal runway grade changes	Maximum rate of longitudinal grade change is produced by vertical curves having 180-m (600-ft) lengths for each percent of algebraic difference between the two grades.				
7	Longitudinal sight distance	Any two points 8 ft above the pavement must be mutually visible (visible by each other) for 5000 ft. Proportionally reduce height above runway for runways shorter than 5,000 ft.				
8	Transverse grade of runway	Runway pavements will be centerline crowned. Slope pavement downwards from centerline of runway. 1.5 percent slope is optimum transverse grade of runway.				
9	Transverse grade of paved shoulder	Slope downward from runway pavement. Reversals are not allowed.				
10	Runway lateral clearance zone	150’	60’	100’	150’	The runway lateral clearance limits coincide with the limits of the primary surface. The ends of the lateral clearance zone coincide with the runway ends plus overruns. The ground surface within this area must be clear of fixed or mobile objects, and graded to the requirements of UFC 3-260-1, Table 3-2, items 13 and 14.

	Item	UAS Runway				Remarks
No.	Description	MQ-1	RQ-7A/B	MQ-5	MQ-9	
						The zone width is measured perpendicularly from the centerline of the runway and begins at the runway centerline. (1) Fixed obstacles include man-made or natural features such as buildings, trees, rocks, terrain irregularities and any other features constituting possible hazards to moving aircraft (2) Mobile obstacles include parked aircraft, parked and moving vehicles, railroad cars, and similar equipment. Taxiing aircraft, emergency vehicles, and authorized maintenance vehicles are exempt. (3) Parallel taxiway (exclusive of shoulder width) will be located in excess of the lateral clearance distances (primary surface). (4) Above ground drainage structures, including head wall, are not permitted within 150’(60’ for RQ-7A/B. 100’ for MQ-5) of the runway centerline
11	Longitudinal grades within	Exclusive of pavement, shoulders, and cover over drainage structures. Slopes are to be as gradual as practicable. Avoid abrupt changes or sudden reversals. Rough grade to the extent necessary to minimize damage to aircraft.				

	Item	UAS Runway				Remarks
No.	Description	MQ-1	RQ-7A/B	MQ-5	MQ-9	
	runway lateral clearance zone					
12	Transverse grades within runway lateral clearance zone (in direction of surface drainage)	Exclusive of pavement, shoulders, and cover over drainage structures. Slopes are to be as gradual as practicable. Avoid abrupt changes or sudden reversals. Rough grade to the extent necessary to minimize damage to aircraft.				
13	Width of mandatory frangibility zone (MFZ) (ft)	200	120	100	200	Centered on the runway centerline. All items sited within this area must be frangible (see UFC 3-260-01Appendix B, Section 13).
14	Length of MFZ	Extends the entire length of the runway plus clearzone. Items that must be sited there due to their function must be made frangible to the maximum extent possible (see UFC 3-260-1, Appendix B, Section 13).				

Table B-2

Overruns						
Item		MQ-1	RQ-7A/B	MQ-5B	MQ-9	Remarks
No.	Description	Requirement				
1	Length paved	200’	Optional 100’	200’	200’	
2	Length unpaved	NA	100’	NA	NA	
3	Total width of overrun (paved and unpaved)	Sum of runway and shoulders				The outside edges of the overrun, equal in width to the runway shoulder, are graded but not paved.
4	Paved overrun width	Same as width of runway				Center on runway centerline extended
5	Longitudinal centerline grade	Same as last 1,000’ of runway	Same as the last 100’ of runway	Same as last 800’ of runway	Same as last 1,000’ of runway	To avoid abrupt changes in grade overrun the maximum change of grade is 2.0 percent per 100 linear ft.
6	Transverse grade	Min 2.0 percent Max 3.0 percent Max 1.7% RQ-7A/B 1.5 in drop-off at edge of paved overrun +/- 0.5 in				From centerline of overrun. Transition from the runway and runway shoulder grades to the overrun grades to be made within the first 50ft of overrun.

Table B-3

Clear Zones						
Item		MQ-1	RQ-7A/B	MQ-5	MQ-9	Remarks
No.	Description	Requirement				
1	Length (ft)	500	100	350	500	Measured along the extended runway centerline beginning at the runway end. For grading requirements, see items 4 and 5.
2	Width at start of clear zone (adjacent to the runway) (ft)	300	120	200	300	Centered on the runway center line extended
3	Length of Graded Clear zone surface (graded area) (ft)	250	100	150	250	Graded area only. For land use outside the graded area of the clear zone, apply AICUZ standards
4	Width at end of clear zone (ft)	300	120	200	300	Centered on the runway center line extended
5	Longitudinal grade of area to be graded	Max 10.0 percent	Max 1.7 percent	Max 7.0 percent	Max 10.0 percent	The area to be graded is 500 ft (RQ/MQ-1& MQ-9), 300 ft (MQ-5B) and 100 ft (RQ-7A/B) in length by the established width of the primary surface. Grades are exclusive of the overrun, but are to be shaped into the overrun grade. The maximum longitudinal grade change cannot exceed ± 2.0 percent per 100 ft. Grade restrictions are also exclusive of other pavements and shoulders. Where other pavements cross the graded area, comply with grading requirements

						for the specific pavement design (tow ways, taxiways, or aprons as applicable), but hold grade changes to the minimum practicable to facilitate drainage. The graded area is to be cleared and grubbed of stumps and free of abrupt surface irregularities, ditches, and ponding areas. No aboveground structures , objects, or roadways (except air traffic control controlled service roads to arresting gear are permitted in the area to be graded, but gentle swales, subsurface drainage, covered culverts and underground structures are permissible. The transition from the graded area to the remainder of the clear zone is to be as gradual as feasible. For policy regarding permissible facilities, geographical features, and land use in the remainder of the clear zone, refer to guidance furnished by the DoD AICUZ guidelines for clear zones and accident potential zones. (See UFC 3-260-1, Appendix B, Section 3.)
6	Transverse grade of area to be graded (in direction of surface drain-age prior to channelization)	Min 2.0 percent Max 10.0 percent				1.7% for RQ-7A/B

7	Width of MFZ (ft)	200	120	120	200	Centered on the extended runway centerline. All items sited within the MFZ in the graded area of the clear zone must be frangible. Items located beyond the Graded Area of the clear zone but within the MFZ must be constructed to be frangible, low impact resistant structures, or semi-frangible (see UFC 3-260-1, Appendix B, Section 13).
8	Length of MFZ (ft)	500	100	300	500	Starts at end of runway and extends through the graded area

Table B-4

Accident Potential Zones						
Item		MQ-1	RQ-7A/B	MQ-5	MQ-9	Remarks
No.	Description	Requirement				
1	APZ I length (ft)	1000				APZ I starts at the end of the clear zone, and is centered and measured on the extended centerline. Modifications will be considered if: - The runway is infrequently used. - Prevailing wind conditions are such that a large percentage (that is, over 80 percent) of the operations are in one direction. - Local accident history indicates consideration of different areas. - Most aircraft do not overfly an APZ area as defined here during normal flight operations (modifications may be made to alter these

Accident Potential Zones						
Item		MQ-1	RQ-7A/B	MQ-5	MQ-9	Remarks
No.	Description	Requirement				
						zones and adjust them to conform to the line of flight). - Other unusual conditions exist.
2	APZ I width (ft)	300	120	200	300	
3	APZ II length (ft)	1000				APZ II starts at the end of the APZ I and is centered and measured on the extended runway centerline. Modifications will be considered if: - The runway is infrequently used. - Prevailing wind conditions are such that a large percentage (that is, over 80 percent) of the operations are in one direction. - Local accident history indicates consideration of different areas. - Most aircraft do not overfly an APZ area as defined here during normal flight operations (modifications may be made to alter these zones and adjust them to conform to the line of flight). - Other unusual conditions exist.
4	APZ II width (ft)	300	120	200	300	

Page Intentionally Left Blank

APPENDIX C

Helicopter UAS

C-1. Fire Scout. The Fire Scout is designed to be launched from a ship or from land. The Fire Scout can utilize any cleared area to launch and recover. The limited-use helipad (50 ft by 50 ft) described in UFC 3-260-01 is acceptable for this aircraft. Line of site in any launch and recovery area to the UHF/VHF antennas connected to the ground control station is mandatory. Performance and clearance requirements are being developed.

Table C-1 MQ-8 (Fire scout)

Max Length (Main rotor Spread, tail rotor vertical) (ft)	31.67
Length (nose to tail, main rotor folded over tail, tail rotor vertical) (ft)	23.25
Length (nose to tail rotor horizontal)(ft)	24.73
Width (outer diameter of skid tubes) (ft)	6.2
Height of main rotor blades (ground to flat rotor disc) (ft)	8.92
Height of vertical stabilizer antenna (ft)	9.75
Main rotor diameter (ft)	27.71
Tail rotor diameter (ft)	4.25
Ground clearance (fuselage, Water Line to ground) (in)	21
Ground clearance (tail skid) (ft)	3.25
Turning Radius in tow (ft)	20
Maximum gross take-off weight (lbs)	3,150
Maximum towing weight (lbs)	3,150
Basic Empty Gross Weight (lbs)	2,029
Assembly Configuration	Skid tubes

Figure C-1 MQ-8 Dimensions

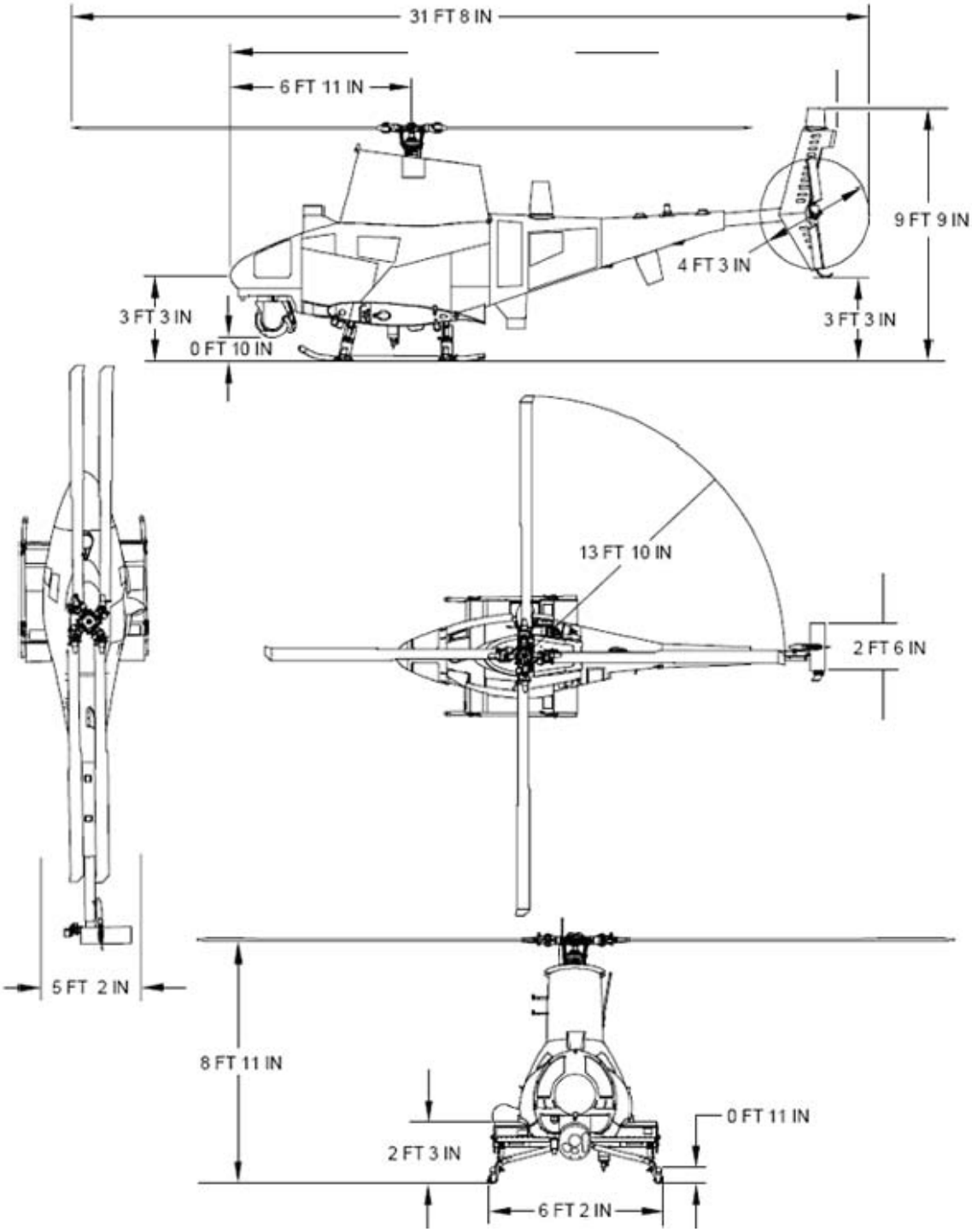

APPENDIX D

Frangibility Requirements

D-1. The TALS-TS and similar structures should be designed such that frangible points including electrical connections must withstand wind loads from jet blasts up to 300 miles per hour (mph) (483 kilometers per hour (kph)) but must break before reaching an applied static load distributed over the cross sectional area of the TALS-TS surface of 2.8 pounds per square inch (psi) (19.3 Kilopascal (kPa)). No part of the TALS-TS foundation and any remaining structure attached to it will extend 3 inches or more above grade after the frangible connections fail. This load shall be applied to the front side of the TALS-TS for the first part of the test. This load shall be applied to the back side of the TALS-TS for the second part of the test.

D-2. Frangibility testing. TALS-TS and similar structures must be tested to withstand jet blasts of 300 mph (483 kph) without damage.

D-3. All testing must be performed with TALS-TS fully assembled including the electrical connections and mounted on its foundation.

D-4. Jet blast tests must be designed to ensure that the TALS-TS receives the full jet blast.

D-5. To simulate wind loading, a static force equivalent to the specified jet blast (2.0 psi (13.8 kPa) for jet blast of 300 mph) must be uniformly applied to the entire front surface of the TALS-TS for 10 minutes. Then, the specified jet blast (2.0 psi (13.8 kPa) for jet blast of 300 mph) must be uniformly applied to the entire back surface of the TALS-TS for 10 minutes.

a. The TALS-TS must not break at the frangible points.

b. Both the TALS-TS and its supports must be inspected for damage. If there is any breakage or permanent deformation, it is considered as a test failure and a cause for rejection.

D-6. The static force (equivalent to the specified wind velocity) applied in paragraph c must be increased until the TALS-TS breaks at the frangible points. Frangible point failure must occur before the TALS-TS loading reaches a maximum equivalent static force of 2.8 psi (19.3 kPa). If frangible point failure does not occur before the TALS-TS loading reaches a maximum equivalent static force of 2.8 psi (19.3 kPa), it is considered as a test failure and a cause for rejection.

D-7. The testing must be performed by a laboratory accepted by the FAA as third party certifiers under the Airport Lighting Equipment Certification program (See FAA Advisory Circular 150/5345-53.